# Installation Instructions for DM92SE, DM96SE, & DC96SE Single-Stage Gas Furnace

(Type FSP CATEGORY IV Direct or Non Direct Vent Air Furnace)
(Type FSP CATÉGORIE IV Direct ou four á air soufflé non direct)

These furnaces comply with requirements embodied in the American National Standard / National Standard of Canada ANSI Z21.47·CSA-2.3 Gas Fired Central Furnaces.

C ETL LISTED US
Intertek

*Installer: Affix all manuals adjacent to the unit.*

As a professional installer you have an obligation to know the product better than the customer. This includes all safety precautions and related items.

Prior to actual installation, thoroughly familiarize yourself with this Instruction Manual. Pay special attention to all safety warnings. Often during installation or repair it is possible to place yourself in a position which is more hazardous than when the unit is in operation.

Remember, it is your responsibility to install the product safely and to know it well enough to be able to instruct a customer in its safe use.

Safety is a matter of common sense...a matter of thinking before acting. Most dealers have a list of specific good safety practices...follow them.

The precautions listed in this Installation Manual are intended as supplemental to existing practices. However, if there is a direct conflict between existing practices and the content of this manual, the precautions listed here take precedence.

**RECOGNIZE THIS SYMBOL AS A SAFETY PRECAUTION.**

*NOTE: Please contact your distributor or our website for the applicable Specification Sheet referred to in this manual.

**WARNING**

**Only personnel that have been trained to install, adjust, service or repair (hereinafter, "service") the equipment specified in this manual should service the equipment. The manufacturer will not be responsible for any injury or property damage arising from improper service or service procedures. If you service this unit, you assume responsibility for any injury or property damage which may result. In addition, in jurisdictions that require one or more licenses to service the equipment specified in this manual, only licensed personnel should service the equipment. Improper installation, adjustment, servicing or repair of the equipment specified in this manual, or attempting to install, adjust, service or repair the equipment specified in this manual without proper training may result in product damage, property damage, personal injury or death.**

**PROP 65 WARNING FOR CALIFORNIA CONSUMERS**

**WARNING**

Cancer and Reproductive Harm - www.P65Warnings.ca.gov

0140M00517-A

IOD-2017F
09/2020

Our continuing commitment to quality products may mean a change in specifications without notice.
© 2019-2020 DAIKIN MANUFACTURING COMPANY, L.P.
19001 Kermier Rd., Waller, TX 77484
www.daikincomfort.com

## TABLE OF CONTENTS


Safety Considerations ..... 3
Shipping Inspection ..... 5
Electrostatic Discharge (ESD) Precautions ..... 5
To The Installer ..... 5
Product Application ..... 5
Location Requirements & Considerations ..... 6
Clearances and Accessibility ..... 8
Existing Furnace Removal ..... 8
Thermostat Location ..... 8
Combustion & Ventilation Requirements ..... 8
Installation Positions ..... 10
Horizontal Applications & Considerations ..... 10
Furnace Suspension ..... 10
Front Cover Pressure Switch Tube Location ..... 10
Drain Trap and Lines ..... 10
Leveling ..... 10
Alternate Electrical and Gas Line Connections ..... 11
Drain Pan ..... 11
Freeze Protection ..... 11
Vent Pipe & Combustion Air Pipe ..... 11
Materials – Installations In The U.S.A. ..... 12
Materials – Installations In Canada ..... 12
Pipe Installation ..... 12
Pipe Sizing ..... 13
Vent Pipe Connection ..... 14
Combustion Air Pipe Connection ..... 14
Alternate Vent & Intake Pipe Connections ..... 15
Pipe Termination ..... 16
Vent/Intake Terminations For Installation of Multiple Direct Vent Furnaces ..... 18
Concentric Vent Termination ..... 18
Side Wall Vent Kit ..... 18
Condensate Drain Lines & Drain Trap ..... 18
General Drain Information ..... 19
Field Supplied Drain ..... 19
Upflow Model Installed Vertically ..... 19
Drain Exiting Right Side ..... 19
Drain Exiting Left Side ..... 20
Upflow Model Installed Horizontally with Right Side Down ..... 20
Upflow Model Installed Horizontally with Left Side Down ..... 20
Upflow Model Installed Horizontally With Left Side Down - Alternate ..... 21
CounterFlow Model Installed Vertically ..... 21
Drain Exiting Left Side ..... 21
Drain Exiting Right Side ..... 22
Counterflow Model Installed Horizontally with Right Side Down ..... 22
Counterflow Model Installed Horizontally with Left Side Down ..... 23
Electrical Connections ..... 24
Wiring Harness ..... 24
115 Volt Line Connections ..... 24
115 Volt Line Voltage Connection of Accessories (Humidifier and Electronic Air Cleaner) ..... 24
Connection of 24 Volt Humidifier ..... 25
Junction Box Relocation ..... 25
24 Volt Thermostat Wiring ..... 25
Single-Stage Heating Thermostat Application ..... 25
Fossil Fuel Applications ..... 25
Twinning ..... 26
Gas Supply and Piping ..... 26
High Altitude Installation ..... 26
Propane Gas Conversion ..... 26
Gas Piping Connections ..... 27
Propane Gas Tanks and Piping ..... 29
Circulating Air & Filters ..... 30
Duct work - Air Flow ..... 30
Checking Duct Static ..... 30
Bottom Return Air Opening [Upflow Models] ..... 31
Filters - Read This Section Before Installing The Return Air Duct work ..... 31
Horizontal Installations ..... 33
Startup Procedure & Adjustment ..... 33
Furnace Cabinet ..... 33
Drain Trap Priming ..... 33
Furnace Operation ..... 33
Gas Supply Pressure Measurement ..... 34
Gas Manifold Pressure Measurement and Adjustment ..... 34
Gas Input Rate Measurement (Natural Gas Only) ..... 35
Temperature Rise ..... 35
Circulator Blower Speeds ..... 35
Blower Heat Off Delay Timings ..... 37
Normal Sequence of Operation ..... 37
Power Up ..... 37
Heating Mode ..... 37
Cooling Mode ..... 37
Fan Only Mode ..... 37
Operational Checks ..... 37
Safety Circuit Description ..... 38
Integrated Control Module ..... 38
Primary Limit ..... 38
Auxiliary Limit ..... 38
Rollout Limit ..... 38
Pressure Switches ..... 38
Flame Sensor ..... 38
Troubleshooting ..... 38
Electrostatic Discharge (ESD) Precautions ..... 38
Diagnostic Chart ..... 38
Fault Code Retrieval ..... 38
Fault Code Reset ..... 38
Resetting From Lockout ..... 39
Maintenance ..... 39
Annual Inspection ..... 39
Filters ..... 39
Burners ..... 39
Induced Draft and Circulator Blowers ..... 39
Condensate Trap and Drain System (Qualified Servicer Only) ..... 40
Flame Sensor (Qualified Servicer Only) ..... 40
Flue Passages (Qualified Servicer Only) ..... 40
Before Leaving an Installation ..... 40
Repair and Replacement Parts ..... 40
Troubleshooting Chart ..... 41
Wiring Diagram ..... 51
Special Instructions for Products Installed in the State of Massachusetts ..... 52

## *Safety Considerations*

Adhere to the following warnings and cautions when installing, adjusting, altering, servicing, or operating the furnace. To ensure proper installation and operation, thoroughly read this manual for specifics pertaining to the installation and application of this product.

This furnace is manufactured for use with natural gas. It may be field converted to operate on L.P. gas by using the appropriate L.P. conversion kit listed in the **PROPANE GAS/ HIGH ALTITUDE INSTALLATIONS section** of this manual

Install this furnace only in a location and position as specified in **LOCATION REQUIREMENTS & CONSIDERATIONS section and INSTALLATION POSITIONS section** of this manual.

Provide adequate combustion and ventilation air to the furnace as specified in **COMBUSTION & VENTILATION AIR REQUIREMENTS section of this manual.**

Combustion products must be discharged to the outdoors. Connect this furnace to an approved vent system only, as specified in **VENT/FLUE PIPE & COMBUSTION AIR PIPE** section of this manual.

Never test for gas leaks with an open flame. Use a commercially available soap solution made specifically for the detection of leaks to check all connections, as specified in **GAS SUPPLY AND PIPING** section of this manual.

Always install a furnace to operate within the furnace's intended temperature-rise range with a duct system which has external static pressure within the allowable range, as specified on the furnace rating plate and **OPERATIONAL CHECKS section** of these instructions.

When a furnace is installed so that supply ducts carry air circulated by the furnace to areas outside the space containing the furnace, the return air shall also be handled by duct(s) sealed to the furnace casing and terminating outside the space containing the furnace.

A gas-fired furnace for installation in a residential garage must be installed as specified in the **LOCATION REQUIREMENTS AND CONSIDERATIONS section** of this manual.

This furnace may be used as a construction site heater only if certain conditions are met. These conditions are listed in the **PRODUCT APPLICATION section** of this manual.

**CAUTION**

**FROZEN AND BURST WATER PIPE HAZARD**

**Failure to protect against the risk of freezing may result in property damage.**

**Special precautions MUST be made if installing furnace in an area which may drop below freezing. This can cause improper operation or damage to equipment. If the furnace environment has the potential of freezing, the drain trap and drain line must be protected. The use of accessory drain trap heaters, electric heat tape and/or RV antifreeze is recommended for these installations.**

**WARNING**

**To prevent personal injury or death due to improper installation, adjustment, alteration, service or maintenance, refer to this manual. For additional assistance or information, consult a qualified installer, servicer agency or the gas supplier.**

**WARNING**

**If the information in these instructions is not followed exactly, a fire or explosion may result causing property damage, personal injury or loss of life.**

— Do not store or use gasoline or other flammable vapors and liquids in the vicinity of this or any other appliance.

— **WHAT TO DO IF YOU SMELL GAS:**

- Do not try to light any appliance.
- Do not touch any electrical switch; do not use any phone in your building.
- Immediately call your gas supplier from a neighbor's phone. Follow the gas supplier's instructions.
- If you cannot reach your gas supplier, call the fire department.

— Installation and service must be performed by a qualified installer, service agency or the gas supplier.

**WARNING**

**Heating unit should not be utilized without reasonable, routine, inspection, maintenance and supervision. If the building in which any such device is located will be vacant, care should be taken that such device is routinely inspected, maintained and monitored. In the event that the building maybe exposed to freezing temperatures and will be vacant, all water-bearing pipes should be drained, the building should be properly winterized, and the water source closed. In the event that the building may be exposed to freezing temperatures and will be vacant, any hydronic coil units should be drained as well and, in such case, alternative heat sources should be utilized.**

**WARNING**

**To prevent possible property damage, personal injury or death due to electrical shock, the furnace must be located to protect the electrical components from water.**

Drain trap must be primed at time of installation. Trap is internally partitioned; add water to both inlet ports until water appears at both sides of the outlet opening. Failure to prime trap at time of installation may have a negative effect on combustion quality and pressure switch action.

## ⚠ WARNING

**FIRE OR EXPLOSION HAZARD**

Failure to follow the safety warnings exactly could result in serious injury, death or property damage.

Never test for gas leaks with an open flame.
Use a commercially available soap solution made specifically for the detection of leaks to check all connections. A fire or explosion may result causing property damage, personal injury or loss of life.

## ⚠ AVERTISSEMENT

**RISQUE D'INCENDIE OU D'EXPLOSION**

Si les consignes de sécurité ne sont pas suivies à la lettre, cela peut entraîner la mort, de graves blessures ou des dommages matériels.

Ne jamais vérifier la présence de fuites de gaz au moyen d'une flamme nue. Vérifier tous les raccords en utilisant une solution savonneuse commerciale conçue spécialement pour la détection de fuites. Un incendie ou une explosion risque de se produire, ce qui peut entraîner la mort, des blessures ou des dommages matériels.

## DANGER

**CARBON MONOXIDE POISONING HAZARD**

**Special Warning for Installation of Furnace or Air Handling Units in Enclosed Areas such as Garages, Utility Rooms or Parking Areas**

Carbon monoxide producing devices (such as an automobile, space heater, gas water heater, etc.) should not be operated in enclosed areas such as unventilated garages, utility rooms or parking areas because of the danger of carbon monoxide (CO) poisoning resulting from the exhaust emissions. If a furnace or air handler is installed in an enclosed area such as a garage, utility room or parking area and a carbon monoxide producing device is operated therein, there must be adequate, direct outside ventilation.

This ventilation is necessary to avoid the danger of CO poisoning which can occur if a carbon monoxide producing device continues to operate in the enclosed area. Carbon monoxide emissions can be (re)circulated throughout the structure if the furnace or air handler is operating in any mode.

**CO can cause serious illness including permanent brain damage or death.**

B10259-216

## DANGER
## PELIGRO

**RIESGO DE INTOXICACIÓN POR MONÓXIDO DE CARBONO**

**Advertencia especial para la instalación de calentadores ó manejadoras de aire en áreas cerradas como estacionamientos ó cuartos de servicio.**

Los equipos ó aparatos que producen monóxido de carbono (tal como automóvil, calentador de gas, calentador de agua por medio de gas, etc) no deben ser operados en áreas cerradas debido al riesgo de envenenamiento por monóxido de carbono (CO) que resulta de las emisiones de gases de combustión. Si el equipo ó aparato se opera en dichas áreas, debe existir una adecuada ventilación directa al exterior.

Esta ventilación es necesaria para evitar el peligro de envenenamiento por CO, que puede ocurrir si un dispositivo que produce monóxido de carbono sigue operando en el lugar cerrado.

Las emisiones de monóxido de carbono pueden circular a través del aparato cuando se opera en cualquier modo.

**El monóxido de carbono puede causar enfermedades severas como daño cerebral permanente ó muerte.**

B10259-216

## DANGER

**RISQUE D'EMPOISONNEMENT AU MONOXYDE DE CARBONE**

**Advertencia especial para la instalación de calentadores ó manejadoras de aire en áreas cerradas como estacionamientos ó cuartos de servicio.**

Avertissement special au sujet de l'installation d'appareils de hauffage ou de traitement d'air dans des endroits clos, tets les garages, les locaux d'entretien et les stationnements. Evitez de mettre en marche les appareils produisant du monoxyde de carbone (tels que les automobile, les appareils de chauffage autonome,etc.) dans des endroits non ventilés tels que les d'empoisonnement au monoxyde de carbone. Si vous devez faire fonctionner ces appareils dans un endroit clos, assures-vous qu'il y ait une ventilation directe provenant de l'exterier.

Cette ventilation est nécessaire pour éviter le danger d'intoxication au CO pouvant survenir si un appareil produisant du monoxyde de carbone continue de fonctionner au sein de la zone confinée.

Les émissions de monoxyde de carbone peuvent etre recircules dans les endroits clos, si l'appareil de chauffage ou de traitement d'air sont en marche.

**Le monoxyde de carbone peut causer des maladies graves telles que des dommages permanents au cerveau et meme la mort.**

B10259-216

## Shipping Inspection

All units are securely packed in shipping containers tested according to International Safe Transit Association specifications. The carton must be checked upon arrival for external damage. If damage is found, a request for inspection by carrier's agent must be made in writing immediately.

The furnace must be carefully inspected on arrival for damage and bolts or screws which may have come loose in transit. In the event of damage the consignee should:

1. Make a notation on delivery receipt of any visible damage to shipment or container.
2. Notify carrier promptly and request an inspection.
3. With concealed damage, carrier must be notified as soon as possible - preferably within five days.
4. File the claim with the following support documents within a nine month statute of limitations.• Original or certified copy of the Bill of Lading, or indemnity bond.

- Original paid freight bill or indemnity in lieu thereof.
- Original or certified copy of the invoice, showing trade and other discounts or reductions.
- Copy of the inspection report issued by carrier's representative at the time damage is reported to carrier.

The carrier is responsible for making prompt inspection of damage and for a thorough investigation of each claim. The distributor or manufacturer will not accept claims from dealers for transportation damage.

## Electrostatic Discharge (ESD) Precautions

**WARNING**

**Should overheating occur or the gas supply fail to shut off, turn off the manual gas shutoff valve external to the furnace before turning off the electrical supply.**

**WARNING**

**Possible property damage, personal injury or death due to fire, explosion, smoke, soot, condensation, electrical shock or carbon monoxide may result from improper installation, repair operation, or maintenance of this product.**

**NOTE:** Discharge your body's static electricity before touching unit. An electrostatic discharge can adversely affect electrical components.

Use the following precautions during furnace installation and servicing to protect the integrated control module from damage. By putting the furnace, the control, and the person at the same electrostatic potential, these steps will help avoid exposing the integrated control module to electrostatic discharge. This procedure is applicable to both installed and non-installed (ungrounded) furnaces.

1. Disconnect all power to the furnace. Do not touch the integrated control module or any wire connected to the control prior to discharging your body's electrostatic charge to ground.
2. Firmly touch a clean, unpainted, metal surface of the furnaces near the control. Any tools held in a person's hand during grounding will be discharged.
3. Service integrated control module or connecting wiring following the discharge process in step 2. Use caution not to recharge your body with static electricity; (i.e., do not move or shuffle your feet, do not touch ungrounded objects, etc.). If you come in contact with an ungrounded object, repeat step 2 before touching control or wires.
4. Discharge your body to ground before removing a new control from its container. Follow steps 1 through 3 if installing the control on a furnace. Return any old or new controls to their containers before touching any ungrounded object.

## To The Installer

Before installing this unit, please read this manual thoroughly to familiarize yourself with specific items which must be adhered to, including but not limited to: unit maximum external static pressure, gas pressures, BTU input rating, proper electrical connections, circulating air temperature rise, minimum or maximum CFM, and motor speed connections.

# *Product Application*

This furnace is primarily designed for residential home-heating applications. It is NOT designed or certified for use in mobile homes, trailers or recreational vehicles. Neither is it designed or certified for outdoor applications. The furnace **must** be installed indoors (i.e., attic space, crawl space, or garage area provided the garage area is enclosed with an operating door).

This furnace can be used in the following non-industrial commercial applications:

Schools, Office buildings, Churches, Retail stores, Nursing homes, Hotels/motels, Common or office areas

In such applications, the furnace must be installed with the following stipulations:

- It must be installed per the installation instructions provided and per local and national codes.
- It must be installed indoors in a building constructed on site.
- It must be part of a ducted system and not used in a free air delivery application.
- It must not be used as a "make-up" air unit.
- It must be installed as a two-pipe systems for combustion air.
- All other warranty exclusions and restrictions apply This furnace is an ETL dual-certified appliance and is appropriate for use with natural or propane gas (**NOTE:** If using propane, a propane conversion kit is required).

Dual certification means that the combustion air inlet pipe is optional and the furnace can be vented as a:

Non-direct vent (single pipe) central forced air furnace in which combustion air is taken from the installation area or from air ducted from the outside or,

Direct vent (dual pipe) central forced air furnace in which all combustion air supplied directly to the furnace burners through a special air intake system outlined in these instructions.

**WARNING**

**TO PREVENT PROPERTY DAMAGE, PERSONAL INJURY OR DEATH DUE TO FIRE, DO NOT INSTALL THIS FURNACE IN A MOBILE HOME, TRAILER, OR RECREATIONAL VEHICLE.**

This furnace may be used as a construction site heater ONLY if all of the following conditions are met:

- The vent system is permanently installed per these installation instructions.
- A room thermostat is used to control the furnace. Fixed jumpers that provide continuous heating CANNOT be used and can cause long term equipment damage. Bimetal thermostats, or any thermostat affected by vibration, must not be used during construction.
- Return air ducts are provided and sealed to the furnace.
- A return air temperature range between 60ºF (16ºC) and 80ºF (27ºC) is maintained.
- MERV 11 pleated minimum 4.0" thick (Example P/N AMP-11-2025-45) air filter(s) are installed in the system and inspected daily and replaced as needed during construction and upon completion of construction.
- The input rate and temperature rise are set per the furnace rating plate.
- The furnace must be installed as a two pipe system, using 100% outside air for combustion during construction.
- The furnace heat exchanger, components, duct system, air filters and evaporator coils are thoroughly cleaned following final construction clean up by a qualified person.
- All furnace operating conditions (including ignition, input rate, temperature rise and venting) are verified according to these installation instructions.
- Furnace doors must be in place on the furnace while the furnace is operating in any mode.
- Damage or repairs due to failure to comply with these requirements are not covered under the warranty.

**NOTE:** The Commonwealth of Massachusetts requires that the following additional requirements must also be met:

- Gas furnaces must be installed by a licensed plumber or gas fitter.
- A T-handle gas cock must be used.
- If the unit is to be installed in an attic, the passageway to and the service area around the unit must have flooring.

**To ensure proper furnace operation, install, operate and maintain the furnace in accordance with these installation and operation instructions, all local building codes and ordinances.** In their absence, follow the latest edition of the National Fuel Gas Code (NFPA 54/ANSI Z223.1), and/or CAN/CSA B149.1-15 Installation Codes, local plumbing or waste water codes, and other applicable codes.

A copy of the National Fuel Gas Code (NFPA 54/ANSI Z223.1) can be obtained from any of the following:

**American National Standards Institute**
23 West 43rd Street, 4th Floor
New York, NY 10036
**National Fire Protection Association**
1 Batterymarch Park
Quincy, MA 02169-7471

**CSA International**
8501 East Pleasant Valley
Independence, OH 441311

The rated heating capacity of the furnace should be greater than or equal to the total heat loss of the area to be heated. The total heat loss should be calculated by an approved method or in accordance with "ASHRAE Guide" or "Manual J-Load Calculations" published by the Air Conditioning Contractors of America.

A copy of the CAN/CSA B149.1-15 Installation Codes can also be obtained from:

**CSA International**
178 Rexdale Boulevard
Etobicoke, Ontario, Canada M9W 1R3

## *Location Requirements & Considerations*

Follow the instructions listed below and the guidelines provided in the *Combustion and Ventilation Air Requirements* section when selecting a furnace location.

**WARNING**

**TO PREVENT POSSIBLE EQUIPMENT DAMAGE, PROPERTY DAMAGE, PERSONAL INJURY OR DEATH, THE FOLLOWING BULLET POINTS MUST BE OBSERVED WHEN INSTALLING THIS UNIT.**

**WARNING**

**POSSIBLE PROPERTY DAMAGE, PERSONAL INJURY OR DEATH DUE TO FIRE, EXPLOSION, SMOKE, SOOT, CONDENSATION, ELECTRICAL SHOCK OR CARBON MONOXIDE MAY RESULT FROM IMPROPER INSTALLATION, REPAIR OPERATION, OR MAINTENANCE OF THIS PRODUCT.**

- Centrally locate the furnace with respect to the proposed or existing air distribution system.
- Ensure the temperature of the return air entering the furnace is between 55˚F and 100˚F when the furnace is heating.
- Provide provisions for venting combustion products outdoors through a proper venting system. Special consideration should be given to vent/flue pipe routing and combustion air intake pipe when applicable. Refer to *Vent/Flue Pipe and Combustion Air Pipe -Termination Locations* for appropriate termination

locations and to determine if the piping system from furnace to termination can be accomplished within the guidelines given. **NOTE:** The length of flue and/or combustion air piping can be a limiting factor in the location of the furnace.

- Locate the furnace so condensate flows downwards to the drain. Do not locate the furnace or its condensate drainage system in any area subject to below freezing temperatures without proper freeze protection.
- Ensure adequate combustion air is available for the furnace. Improper or insufficient combustion air can expose building occupants to gas combustion products that could include carbon monoxide. Refer to *Combustion and Ventilation Air Requirements*.
- Set the furnace on a level floor to enable proper condensate drainage. If the floor becomes wet or damp at times, place the furnace above the floor on a concrete base sized approximately 1-1/2" larger than the base of the furnace. Refer to the *Horizontal Applications and Considerations* for leveling of horizontal furnaces.
- Ensure upflow or horizontal furnaces are not installed directly on carpeting, or any other combustible material. The only combustible material allowed is wood.
- A special accessory sub-base must be used for upright counterflow unit installations over any combustible material (including wood). Refer to sub-base instructions for installation details. (**NOTE:** A sub-base will not be required if an air conditioning coil is located beneath the furnace between the supply air opening and the combustible floor.
- Exposure to contaminated combustion air will result in safety and performance-related problems. Do not install the furnace where the combustion air is exposed to the following substances:

  permanent wave solutions
  chlorinated waxes or cleaners
  chlorine-based
  carbon tetrachloride
  water softening chemicals
  swimming pool chemicals
  deicing salts or chemicals
  halogen type refrigerants
  printing inks
  cleaning solutions (such as perchloroethylene)
  paint removers
  varnishes
  hydrochloric acid
  cements and glues
  antistatic fabric softeners for clothes dryers
  masonry acid washing materials
- Enclose a *non-direct vent* furnace if it is installed near an area frequently contaminated by any of the above substances. This protects the *non-direct vent* furnace from airborne contaminants. To ensure that the enclosed *non-direct vent* furnace has an adequate supply of combustion air, provide air from a nearby uncontaminated room or from outdoors. Refer to the *Combustion and Ventilation Air Requirements* for details.
- If the furnace is used in connection with a cooling coil unit, install the furnace upstream or in parallel with the cooling coil unit. Premature heat exchanger failure will result if the cooling unit is placed ahead of the furnace.

  For vertical (upflow or downflow) applications, the minimum cooling coil width shall not be less than furnace width minus 1". Additionally, a coil installed above an upflow furnace or under a counterflow furnace may be the same width as the furnace or may be one size larger than the furnace. *Example: a "C" width coil may be installed with a "B" width furnace*.

  For upflow applications, the front of the coil and furnace must face the same direction.
- If the furnace is installed in a residential garage, position the furnace so that the burners and ignition source are located not less than 18 inches (457 mm) above the floor. Protect the furnace from physical damage by vehicles.
- If the furnace is installed horizontally, ensure the access doors are not on the "up/top" or "down/bottom" side of the furnace.
- Do not connect this furnace to a chimney flue that serves a separate appliance designed to burn solid fuel.
- On Counterflow Installations, the air conditioning coil must be downstream on the supply (positive) side of the furnace heat exchanger.
- *Counterflow Installation over a noncombustible floor.* Before setting the furnace over the plenum opening, ensure the surface around the opening is smooth and level. A tight seal should be made between the furnace base and floor by using a silicone rubber caulking compound or cement grout.
- *Counterflow Installation over a combustible floor.* If installation over a combustible floor becomes necessary, use an accessory sub-base (see Specification Sheet applicable for your model for details.) A special accessory sub-base must be used for upright counterflow unit installations over any combustible material including wood. Refer to sub-base instructions for installation details. Follow the instructions with the sub-base for proper installation. Do not install the furnace directly on carpeting, tile, or other combustible material other than wood flooring. (**NOTE**: The sub-base will not be required if an air conditioning coil is installed between the supply air opening on the furnace and the floor.)

| *MES[92 & 96]* MINIMUM CLEARANCES TO COMBUSTIBLE MATERIALS (INCHES) | | | | | | |
|---|---|---|---|---|---|---|
| POSITION* | SIDES | REAR | FRONT | BOTTOM | FLUE | TOP |
| Upflow | 0" | 0" | 3" | C | 0" | 1" |
| Horizontal | 6" | 0" | 3" | C | 0" | 6" |

C = If placed on combustible floor, floor MUST be wood only.

| *CES[92 & 96]* MINIMUM CLEARANCES TO COMBUSTIBLE MATERIALS (INCHES) | | | | | | |
|---|---|---|---|---|---|---|
| POSITION* | SIDES | REAR | FRONT | BOTTOM | FLUE | TOP |
| Counterflow | 0" | 0" | 3" | NC | 0" | 1" |
| Horizontal | 6" | 0" | 3" | C | 0" | 6" |

C = If placed on combustible floor, floor MUST be wood only.

NC = For installation on non-combustible floors only. A combustible subbase must be used for installations on combustible flooring.

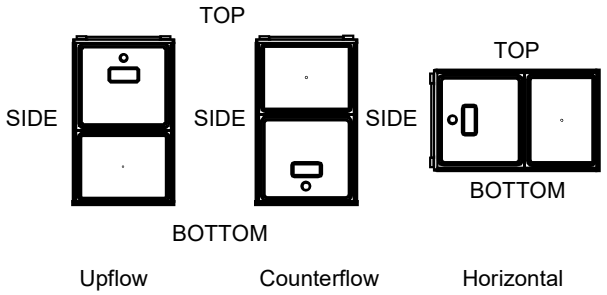


Figure 1

## Clearances and Accessibility

**NOTES:**

- For servicing or cleaning, a 24" front clearance is required.
- Unit connections (electrical, flue and drain) may necessitate greater clearances than the minimum clearances listed above.
- Clearance in accordance with local installation codes, the requirements of the gas supplier and the manufacturer's installation instructions.
  Dégaugement conforme aux codes d'installation locaux, aux exigences du fournisseur de gaz et aux instructions d'installation du fabricant.
- In all cases, accessibility clearance must take precedence over clearances from the enclosure where accessibility clearances are greater.

Installations must adhere to the clearances to combustible materials to which this furnace has been design certified. The minimum clearance information for this furnace is provided on the unit's clearance label. These clearances must be permanently maintained. Clearances must also accommodate an installation's gas, electrical, and drain trap and drain line connections. If the alternate combustion air intake or vent/flue connections are used additional clearance must be provided to accommodate these connections. Refer to *Vent/Flue Pipe and Combustion Air Pipe* for details.

**NOTE:** In addition to the required clearances to combustible materials, a minimum of 24 inches service clearance must be available in front of the unit.

A furnace installed in a confined space (i.e., a closet or utility room) must have two ventilation openings with a total minimum free area of 0.25 square inches per 1,000 BTU/hr of furnace input rating. Refer to Specification Sheet applicable to your model for minimum clearances to combustible surfaces. One of the ventilation openings must be within 12 inches of the top; the other opening must be within 12 inches of the bottom of the confined space. In a typical construction, the clearance between the door and door frame is usually adequate to satisfy this ventilation requirement.

## Existing Furnace Removal

**NOTE:** When an existing furnace is removed from a venting system serving other appliances, the venting system may be too large to properly vent the remaining attached appliances.

The following vent testing procedure is reproduced from the **American National Standard/National Standard of Canada for Gas-Fired Central Furnaces ANSI Z21.47, CSA-2.3 latest edition Section 1.23.1.**

## Thermostat Location

**WARNING**

TO AVOID PROPERTY DAMAGE, PERSONAL INJURY OR DEATH, SUFFICIENT FRESH AIR FOR PROPER COMBUSTION AND VENTILATION OF FLUE GASES MUST BE SUPPLIED. MOST HOMES REQUIRE OUTSIDE AIR BE SUPPLIED INTO THE FURNACE AREA.

The thermostat should be placed approximately five feet from the floor on a vibration-free, inside wall in an area having good air circulation. Do not install the thermostat where it may be influenced by any of the following:

- Drafts, or dead spots behind doors, in corners, or under cabinets.
- Hot or cold air from registers.
- Radiant heat from the sun.
- Light fixtures or other appliances.
- Radiant heat from a fireplace.
- Concealed hot or cold water pipes, or chimneys.
- Unconditioned areas behind the thermostat, such as an outside wall. Consult the instructions packaged with the thermostat for mounting instructions and further precautions.

## *Combustion & Ventilation Requirements*

Improved construction and additional insulation in buildings have reduced heat loss by reducing air infiltration and escape around doors and windows. These changes have helped in reducing heating/cooling costs but have created a problem supplying combustion and ventilation air for gas fired and other fuel burning appliances. Appliances that pull air out of the house (clothes dryers, exhaust fans, fireplaces, etc.) increase the problem by starving appliances for air.

## WARNING

**CARBON MONOXIDE POISONING HAZARD**
Failure to follow the steps outlined below for each appliance connected to the venting system being placed into operation could result in carbon monoxide poisoning or death.

The following steps shall be followed with each appliance connected to the venting system placed in operation, while any other appliances connected to the venting system are not in operation:

1. Seal any unused openings in the venting system.
2. Inspect the venting system for proper size and horizontal pitch, as required by the National Fuel Gas Code, ANSI Z223.1 or the Natural Gas and Propane Installation Code, CSA B149.1-15 and these instructions. Determine that there is no blockage or restriction, leakage, corrosion and other deficiencies which could cause an unsafe condition.
3. As far as practical, close all building doors and windows and all doors between the space in which the appliance(s) connected to the venting system are located and other spaces of the building.
4. Close fireplace dampers.
5. Turn on clothes dryers and any appliance not connected to the venting system. Turn on any exhaust fans, such as range hoods and bathroom exhausts, so they shall operate at maximum speed. Do not operate a summer exhaust fan.
6. Follow the lighting instructions. Place the appliance being inspected in operation. Adjust thermostat so appliance shall operate continuously.
7. Test for spillage from draft hood appliances at the draft hood relief opening after 5 minutes of main burner operation. Use the flame of a match or candle.
8. If improper venting is observed during any of the above tests, the venting system must be corrected in accordance with the National Fuel Gas Code ANSI Z223.1/NFPA 54 and/or National Gas and Propane Installation Code CSA B149.1-15.
9. After it has been determined that each appliance connected to the venting system properly vents when tested as outlined above, return doors, windows, exhaust fans, fireplace dampers and any other gas burning appliance to their previous conditions of use.

## AVERTISSEMENT

**RISQUE D'INTOXICATION AU MONOXYDE DE CARBONE**
Si les étapes décrites ci-dessous ne sont pas suivies pour chacun des appareils raccordés au système de ventilation au moment de sa mise en marche, cela peut entraîner une intoxication au monoxyde de carbone ou la mort. Les étapes suivantes doivent être suivies pour chacun des appareils raccordés au système de ventilation au moment de sa mise en marche, alors que tous les autres appareils raccordés au système de ventilation ne sont pas en marche :

1) Sceller toutes les ouvertures inutilisées du système de ventilation.
2) Inspecter le système de ventilation afin de vérifier si la taille et l'inclinaison par rapport à l'horizontale sont conformes aux exigences du National Fuel Gas Code, ANSI Z223.1/NFPA 54 ou du Code d'installation du gaz naturel et du propane, CSA B149.1 et à ces instructions. Vérifier qu'il n'y a pas d'obstruction ou de restriction, de fuite, de corrosion et d'autres problèmes qui pourraient entraîner une situation dangereuse.
3) Si possible, fermer toutes les portes et fenêtres du bâtiment ainsi que toutes les portes séparant l'endroit où se trouvent les appareils raccordés au système de ventilation et les autres zones du bâtiment.
4) Fermer le registre des foyers.
5) Mettre les sécheuses en marche ainsi que tous les autres appareils qui ne sont pas raccordés au système de ventilation. Mettre en marche tous les ventilateurs de tirage, comme celui des hottes de cuisine et des salles de bains, et les régler à la puissance maximale. Ne pas mettre en marche les ventilateurs d'été.
6) Suivre les instructions d'allumage. Mettre en marche l'appareil soumis à l'inspection. Régler le thermostat de manière à ce que l'appareil fonctionne en continu.
7) Vérifier la présence de fuite au niveau de l'ouverture du coupe-tirage des appareils qui en sont dotés après 5 minutes de fonctionnement du brûleur principal. Utiliser la flamme d'une allumette ou d'une bougie.
8) Si un problème de ventilation est observé pendant l'un des essais décrits ci-dessus, des correctifs doivent être apportés au système de ventilation conformément au National Fuel Gas Code, ANSI Z223.1/NFPA 54 et (ou) au Code d'installation du gaz naturel et du propane, CSA B149.1.
9) Une fois qu'il a été déterminé que chaque appareil raccordé au système de ventilation fonctionne correctement au moyen des essais décrits ci-dessus, les portes, les fenêtres, les ventilateurs, les registres de foyer et tous les autres appareils de combustion alimentés au gaz doivent être remis dans leur état initial.

House depressurization can cause back drafting or improper combustion of gas-fired appliances, thereby exposing building occupants to gas combustion products that could include carbon monoxide.

If this furnace is to be installed in the same space with other gas appliances, such as a water heater, ensure there is an adequate supply of combustion and ventilation air for the other appliances. Refer to the latest edition of the National Fuel Gas Code NFPA 54/ANSI Z223.1 or CAN/CSA B1491-15 Installation Codes or applicable provisions of the local building codes for determining the combustion air requirements for the appliances.

Most homes will require outside air be supplied to the furnace area by means of ventilation grilles or ducts connecting directly to the outdoors or spaces open to the outdoors such as attics or crawl spaces.

## *Installation Positions*

This furnace may be installed in an upright position or horizontal on either the left or right side panel. Do not install this furnace on its back. For *upright upflow* furnaces, return air ductwork may be attached to the side panel(s) and/or basepan. For *horizontal upflow* furnaces, return air ductwork must be attached to the basepan. For both *upright or horizontal counterflow* furnaces, return ductwork must be attached to the basepan (top end of the blower compartment). **NOTE:** Ductwork must never be attached to the back of the furnace. Contact your distributor for proper airflow requirements and number of required ductwork connections. Refer to "Recommended Installation Positions" figure for appropriate installation positions, ductwork connections, and resulting airflow arrangements.

## *Horizontal Applications & Considerations*

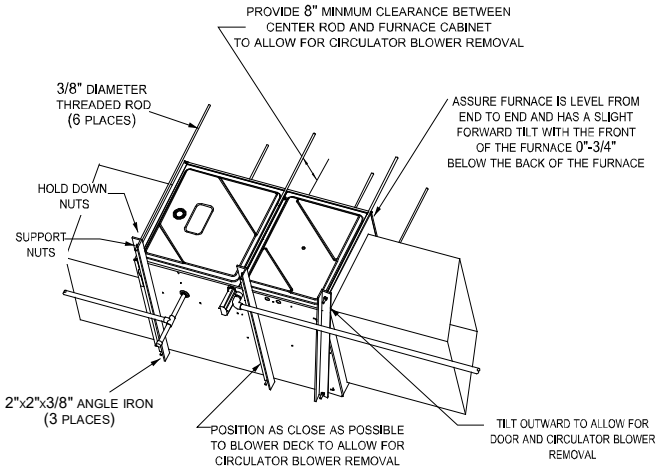


Figure 2

When installing a furnace horizontally, additional consideration must be given to the following:

### Furnace Suspension

If suspending the furnace from rafters or joists, use 3/8" threaded rod and 2"x2"x1/8" angle iron as shown in the following diagram. The length of rod will depend on the application and the clearances necessary.

If the furnace is installed in a crawl space it must be suspended from the floor joist or supported by a concrete pad. Never install the furnace on the ground or allow it to be exposed to water.

### Front Cover Pressure Switch Tube Location

When a furnace is installed horizontally with left side down, the front cover pressure switch tube must be re-located to the lower port of the collector box cover.

1. Remove tube from front cover pressure switch and collector box cover.
2. Remove rubber plug from bottom collector box port and install on top collector box port.
3. Locate 24" x 1/4" tube in bag assembly.
4. Install one end on front cover pressure switch.
5. Route tube to lower port on collector box cover and cut off excess tubing.

### Drain Trap and Lines

In horizontal applications the condensate drain trap is secured to the furnace side panel, suspending it below the furnace. A minimum clearance of 5.5" below the furnace must be provided for the drain trap. Additionally, the appropriate downward piping slope must be maintained from the drain trap to the drain location. Refer to *Condensate Drain Trap and Lines* for further details. If the drain trap and drain line will be exposed to temperatures near or below freezing, adequate measures must be taken to prevent condensate from freezing.

### Leveling

Leveling ensures proper condensate drainage from the heat exchanger. For proper flue pipe drainage, the furnace must be level lengthwise from end to end. The furnace should have a slight tilt from back to front with the access doors downhill from the back panel approximately 1/2 to 3/4 inches. The slight tilt allows the heat exchanger condensate, generated in the recuperator coil, to flow forward to the recuperator coil front cover.

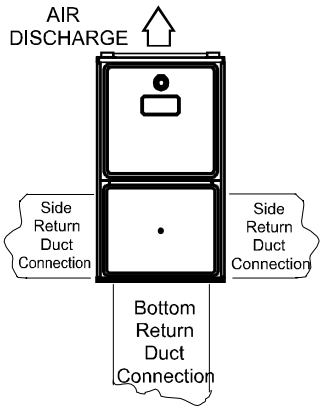


**UPFLOW UPRIGHT**

Figure 3A

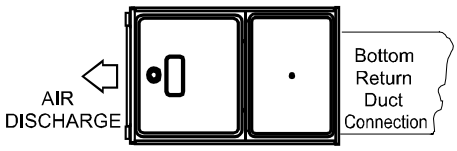


**UPFLOW HORIZONTAL LEFT AIR DISCHARGE**

Figure 3B

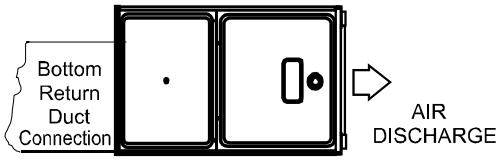


**UPFLOW HORIZONTAL RIGHT AIR DISCHARGE**

Figure 3C

**Recommended Installation Positions**

## Alternate Electrical and Gas Line Connections

This furnace has provisions allowing for electrical and gas line connections through either side panel. In horizontal applications the connections can be made either through the "top" or "bottom" of the furnace.

## Drain Pan

A drain pan must be provided if the furnace is installed above a conditioned area. The drain pan must cover the entire area under the furnace (and air conditioning coil if applicable).

## Freeze Protection

If the drain line is routed through an area which may see temperatures near or below freezing, precautions must be taken to prevent condensate from freezing within the drain line.

**WARNING**

**Possible property damage, personal injury or death may occur if the correct conversion kits are not installed. The appropriate kits must be applied to ensure safe and proper furnace operation. All conversions must be performed by a qualified installer or service agency.**

| Gas | Altitude | Kit | Orifice | Manifold Pressure | | Pressure Switch Change |
|---|---|---|---|---|---|---|
| | | | | High Stage | Low Stage | |
| Natural | 0-7000 | None | #45 | 3.5" w.c. | 1.9" w.c. | None |
| Propane | | LPM-07* [1] | 1.25mm | 10.0" w.c. | 6.0" w.c. | None |

[1] LPM-07* supports both Honeywell and White-Rodgers 1-stage valves

**NOTE:** In Canada, gas furnaces are only certified to 4500 feet.

## Vent Pipe & Combustion Air Pipe

**WARNING**

**Upon completion of the furnace installation, carefully inspect the entire flue system both inside and outside of the furnace to assure it is properly sealed. Leaks in the flue system can result in serious personal injury or death due to exposure to flue products, including carbon monoxide.**

**WARNING**

**Failure to follow these instructions can result in bodily injury or death. Carefully read and follow all instructions given in this section.**

This manual will refer to the pipe that discharges products of combustion to the outdoors as the "vent" pipe or "flue" pipe. The pipe that supplies air for combustion to the furnace will be referred to as the "intake" pipe or "combustion air" pipe.

This furnace is dual certified and may be installed as a non-direct vent (single pipe) or direct vent (dual pipe) appliance.

## Materials – Installations In The U.S.A.

PVC, CPVC, or ABS pipe & fittings are typically used as venting and intake pipe materials. All 90° elbows must be medium or long radius types. A medium radius elbow should measure ~3-1/16” minimum from the plane of one opening to the center line of the other opening for 2” diameter pipe, and ~4-9/16” minimum for 3” pipe.

In addition to these materials, Innoflue® by Centrotherm Eco Systems and PolyPro® by M&G Duravent are also approved vent and combustion air materials for installations in the U.S.A. Manufacturers Installation instructions for these products must be followed. These products have specific instructions for installing, joining and terminating. Do not mix materials or components of one manufacturer with materials or components of another manufacturer. Refer to the following chart for plastic pipe & fittings specifications.

## Materials – Installations In Canada

All installations in Canada must conform to the requirements of CAN/CSA B149.1-15 code. All vent components, including primer and cement, must be listed to ULC S636. The certified pipe and fittings should be clearly marked with the ULC standard “S636”. The primer and cement used must be of the same manufacturer as the vent system. For Royal Pipe System 636; use GVS-65 Primer (Purple) and GVS-65 PVC Solvent Cement. For IPEX System 636, use PVC/CPVC Primer, Purple or clear. Use PVC Solvent cement (Gray). For Canadian installations, ABS may be used as a combustion air pipe only. ABS is not an approved vent material in Canada. If ABS is used as a combustion air pipe, it must be CSA certified. Always follow the manufacturer’s instructions in the use of primer and cement. Do not use primer and cement around potential sources of ignition. Do not use primer or cement beyond its expiration date.

| VENTING MATERIAL REQUIREMENTS | |
|---|---|
| PVC | ASTM STANDARD |
| SCHEDULE 40 PIPE | D1785 |
| SCHEDULE 40 CELLULAR CORE PIPE | F891 |
| SDR 21 OR 26 PIPE | D2241 |
| FITTINGS | D2466 |
| ABS | |
| SCHEDULE 40 PIPE | D1527 |
| SCHEDULE 40 CELLULAR CORE PIPE | F628 |
| FITTINGS | D2468 |
| CPVC | |
| SCHEDULE 40 PIPE | F441 |
| SDR 21 OR 26 PIPE | F442 |
| FITTINGS | F438 |
| POLYPROPYLENE | |
| INNOFLUE® (CENTROTHERM) | |
| POLYPRO® (DURAVENT) | |
| PRIMER & SOLVENT CEMENT | |
| PVC PRIMER | F656 |
| CPVC PRIMER | F656 |
| PVC SOLVENT CEMENT | D2564 |
| CPVC SOLVENT CEMENT | F493 |
| ABS SOLVENT CEMENT | D2235 |
| ABS / PVC / CPVC ALL PURPOSE CEMENT (FOR PIPE & FITTINGS OF THE SAME MATERIAL) | D2564, D2235, F493 |
| TRANSITION CEMENT FOR ABS TO PVC or CPVC | D3188 |
| INSTALLATIONS IN CANADA | |
| PVC & CPVC PIPE & FITTINGS | ULC S636 |
| PVC & CPVC SOLVENT CEMENT | |
| TRANSITION CEMENT | |
| INNOFLUE® (CENTROTHERM) | |
| POLYPRO® (DURAVENT) | |

## Pipe Installation

This furnace is manufactured with 2” CPVC vent & intake couplings. Use transition cement to connect PVC or ABS pipe to these fittings. For furnaces requiring installation of 3” pipe, the transition from 2” to 3” should be done as close to the furnace as possible, and only when the piping is sloped enough to prevent condensation from collecting.

This furnace must not be connected to Type B, BW, or L vent or vent connector, and must not be vented into masonry chimney. A masonry chimney may be used as a chase or passage way for approved venting materials providing the masonry chimney is not also being used to vent products of combustion. Never common vent this appliance with another appliance. Never use a vent which is used by a solid fuel appliance.

Piping may run vertically or horizontally and must be adequately supported to prevent strain on joints, sagging, separation, and detachment from the furnace. Horizontal runs of piping must be supported every three to five feet. Condensation within the furnace secondary heat exchanger and in the vent pipe is a normal occurrence. Vent pipe must be installed to maintain a minimum 1/4 inch per foot downward slope toward the furnace to return condensate to the furnace's drain system. Condensation may also occur in the intake pipe. This commonly takes place during the summer months when humid air enters an intake pipe that runs through a cool basement or other conditioned space. If the combustion air intake pipe is to be installed above a finished ceiling or other area where dripping of condensate will be objectionable,

insulating the combustion air pipe may be necessary. Use 1/2" thick closed cell foam insulation where required. Refer to intake pipe options for using the RF000142 kit and managing condensation.

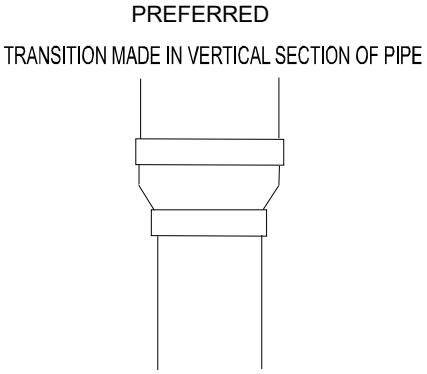


Figure 4

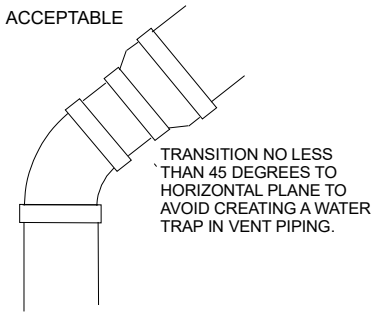


Figure 5

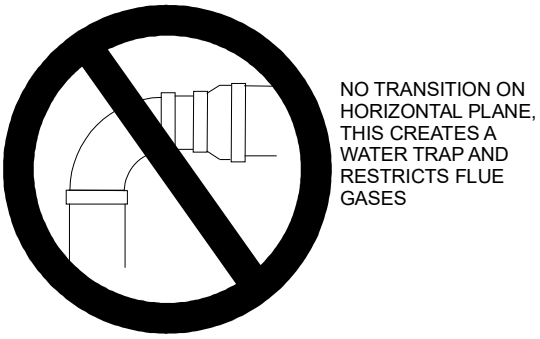


Figure 6

Precautions must be taken to prevent condensate from freezing inside the vent pipe. All vent piping exposed to freezing temperatures must be insulated with 1/2" thick closed cell foam. Inspect piping for leaks prior to installing insulation.

**WARNING**

**To avoid bodily injury, fire or explosion, solvent cements must be kept away from all ignition sources (i.e., sparks, open flames, and excessive heat) as they are combustible liquids. Avoid breathing cement vapors or contact with skin and/or eyes.**

## Pipe Sizing

Consult tables 4&5 to determine what diameter piping is required for your installation. Lengths shown in the chart apply to single pipe & two pipe installations. In a two pipe installation the length shown refers to only one pipe, vent or intake. Both pipes would normally be equal in length, if different, then the longest pipe must be within the limits of table 4. It is preferable to up-size from 2" to 2.5" or 3" pipe if the pipe length & elbow count are near maximum. This will help avoid nuisance pressure switch opening caused by prevailing winds & sudden changes in atmospheric pressure.

**DM92SE* Direct Vent (2-Pipe) & Non-Direct Vent (1-Pipe) (6)**
**Maximum Allowable Length of Vent/Flue Pipe & Combustion Air Pipe (Ft) (1) (2)**

| | | Elbows | | | | | | | |
|---|---|---|---|---|---|---|---|---|---|
| Model | Pipe Size | 1 | 2 | 3 | 4 | 5 | 6 | 7 | 8 |
| DM92SE0403AN | 2 | 75 | 70 | 65 | 60 | 55 | 50 | 45 | 40 |
| | 3 | 114 | 107 | 100 | 93 | 86 | 79 | 72 | 65 |
| DM92SE0603BN | 2 | 55 | 50 | 45 | 40 | 35 | 30 | 25 | 20 |
| | 3 | 127 | 120 | 113 | 106 | 99 | 92 | 85 | 78 |
| DM92SE0803BN | 2^ | 30 | 25 | 20 | 15 | 10 | 5 | N/A | N/A |
| | 3^ | 72 | 65 | 58 | 51 | 44 | 37 | 30 | 23 |
| DM92SE0804CN | 2^ | 30 | 25 | 20 | 15 | 10 | 5 | N/A | N/A |
| | 3^ | 72 | 65 | 58 | 51 | 44 | 37 | 30 | 23 |
| DM92SE0805CN | 2^ | 40 | 35 | 30 | 25 | 20 | 15 | 10 | 5 |
| | 3 | 72 | 65 | 58 | 51 | 44 | 37 | 30 | 23 |
| DM92SE1004CN | 2 | 60 | 55 | 50 | 45 | 40 | 35 | 30 | 25 |
| | 3 | 168 | 161 | 154 | 147 | 140 | 133 | 126 | 119 |
| DM92SE1005CN | 2 | 30 | 25 | 20 | 15 | 10 | 5 | N/A | N/A |
| | 3 | 113 | 106 | 99 | 92 | 85 | 78 | 71 | 64 |
| DM92SE1205DN | 2 | N/A | N/A | N/A | N/A | N/A | N/A | N/A | N/A |
| | 3 | 65 | 58 | 51 | 44 | 37 | 30 | 23 | 16 |

**7,000 ft altitude or above use 3" pipe**
**^DM92SE0803BN - Add 10' of 2" pipe for upflow position, add 66' of 3" pipe for upflow position**
**^DM92SE0804CN - Add 25' of 2" pipe for upflow position, add 58' of 3" pipe for upflow position**
**^DM92SE0805CN - Add 15' of 2" pipe for upflow position, add 58' of 3" pipe for upflow position**

Table 4

**DM96SE* & DC96SE* Direct Vent (2-Pipe) & Non-Direct Vent (1-Pipe) (6) Maximum Allowable Length of Vent/ FLue Pipe & Combustion Air Pipe (Ft) (1) (2)**

| | | Number of Elbows (3) (5) | | | | | | | |
|---|---|---|---|---|---|---|---|---|---|
| MODEL | PIPE SIZE | 1 | 2 | 3 | 4 | 5 | 6 | 7 | 8 |
| DM96SE0403AN | 2 | 75 | 70 | 65 | 60 | 55 | 50 | 45 | 40 |
| | 3 | 114 | 107 | 100 | 93 | 86 | 79 | 72 | 65 |
| DM96SE0603BN | 2 | 45 | 40 | 35 | 30 | 25 | 20 | 15 | 10 |
| | 3 | 168 | 161 | 154 | 147 | 140 | 133 | 126 | 119 |
| DM96SE0803BN | 2 | 35 | 30 | 25 | 20 | 15 | 10 | 5 | N/A |
| | 3 | 168 | 161 | 154 | 147 | 140 | 133 | 126 | 119 |
| DM96SE0804CN | 2 | 60 | 55 | 50 | 45 | 40 | 35 | 30 | 25 |
| | 3 | 113 | 106 | 99 | 92 | 85 | 78 | 71 | 64 |
| DM96SE0805CN | 2 | 45 | 40 | 35 | 30 | 25 | 20 | 15 | 10 |
| | 3 | 120 | 113 | 106 | 99 | 92 | 85 | 78 | 71 |
| DM96SE1005CN | 2 | 40 | 35 | 30 | 25 | 20 | 15 | 10 | 5 |
| | 3 | 151 | 144 | 137 | 130 | 123 | 116 | 109 | 102 |
| DM96SE1205DN | 2 | N/A | N/A | N/A | N/A | N/A | N/A | N/A | N/A |
| | 3 | 158 | 151 | 144 | 137 | 130 | 123 | 116 | 109 |
| DC96SE0403BN | 2 | 100 | 95 | 90 | 85 | 80 | 75 | 70 | 65 |
| | 3 | 137 | 130 | 123 | 116 | 109 | 102 | 95 | 88 |
| DC96SE0603BN | 2 | 45 | 40 | 35 | 30 | 25 | 20 | 15 | 10 |
| | 3 | 168 | 161 | 154 | 147 | 140 | 133 | 126 | 119 |
| DC96SE0804CN | 2 | 40 | 35 | 30 | 25 | 20 | 15 | 10 | 5 |
| | 3 | 120 | 113 | 106 | 99 | 92 | 85 | 78 | 71 |
| DC96SE1005CN | 2 | N/A | N/A | N/A | N/A | N/A | N/A | N/A | N/A |
| | 3 | 113 | 106 | 99 | 92 | 85 | 78 | 71 | 64 |
| DC96SE1205DN | 2 | N/A | N/A | N/A | N/A | N/A | N/A | N/A | N/A |
| | 3 | 110 | 103 | 96 | 89 | 82 | 75 | 68 | 61 |

7,000 ft altitude or above use 3" pipe
^DM96SE0803BN - add 20' of 2" pipe for upflow position

**Table 5**

1. Maximum allowable limits listed on individual lengths for inlet and flue and NOT a combination.
2. Minimum requirement for each vent pipe if five (5) feet in length and one elbow/tee.
3. Tee used in the vent/flue termination must be included when determining the number of elbows in the piping system.
4. 2 ½" or 3" diameter pipe can be used in place of 2" diameter pipe.
5. Increased Clearance Configuration using (2) 45 deg. Long Sweep elbows should be considered equivalent to one 90 deg. elbow.
6. One 90° elbow should be secured to the combustion air intake connection.

## Vent Pipe Connection

The vent pipe outlet is sized to accept 2" pipe. Secure vent pipe directly into the furnace fitting with the appropriate glue. Alternately, a small section of 2" pipe may be glued in the furnace socket and a rubber coupling installed to allow removal for future service. Piping should be routed in a manner to avoid contact with refrigerant lines, metering devices, condensate drain lines, etc. If necessary, clearances may be increased by creating an offset using two 45° elbows (Figure 7).

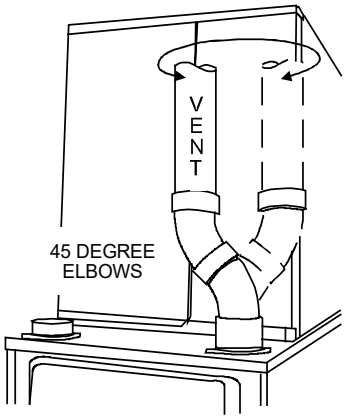


Increased Clearance Configuration
Figure 7

## Combustion Air Pipe Connection

If the furnace is being installed without a combustion air pipe, a 90° elbow should be used on the combustion air intake to guard against blockage.

On up flow / horizontal models, secure the combustion air intake pipe to the air intake coupling using a rubber coupling supplied with the furnace. The rubber coupling may be omitted by inverting the intake coupling and gluing pipe directly to it. Piping may also be glued to the intake coupling in its original position by using a plastic coupling. On counterflow units secure the combustion air intake pipe to the air intake coupling using the rubber coupling and worm gear hose clamps provided with the unit. The counterflow rubber coupling allows service removal of air intake piping internal to the furnace blower compartment. The combustion air intake pipe can also be secured directly to the counterflow unit air intake pipe coupling.

### *Combustion Air Intake Options*

The RF000142 coupling (Figure 9) can be secured directly to the furnace intake coupling if condensation/rain water is a concern. If the RF000142 is used on the combustion air inlet, it must be installed with the arrow pointing up. It should be noted, the combustion air will actually be moving in a direction opposite of the arrow on the RF000142 coupling. It must have a field supplied, trapped drain tube free-draining to a proper condensate disposal location. A loop in the drain tube can serve as a trap. The unused RF000142 drain fitting must be capped. A field supplied tee installed in the intake pipe is also an acceptable method of catching condensation. It must have a field supplied, trapped drain tube or pipe, free-draining to a proper condensate disposal location. A loop in the drain tube can serve as a trap.

**WARNING**

**Edges of sheet metal holes may be sharp. Use gloves as a precaution when removing hole plugs.**

## Alternate Vent & Intake Pipe Connections

### *(Upflow/Horizontal models only)*

When installing a furnace horizontally with the left side down, alternate flue and combustion air pipe connections may be used. This method allows the flue and combustion air piping to be run vertically through the side of the furnace (facing up in horizontal left). The alternate vent location is the 3” hole directly in line with the induced draft blower outlet.

When using the horizontal alternate vent configuration, you must use the RF000142 vent drain kit. See Figures 8-11 & follow steps below.

**NOTE: In the horizontal left installation position, a means of condensate collection must be provided to keep vent pipe condensate from entering the draft inducer housing. If the vent drain elbow is eliminated from the installation, the RF000142 kit must be used.**

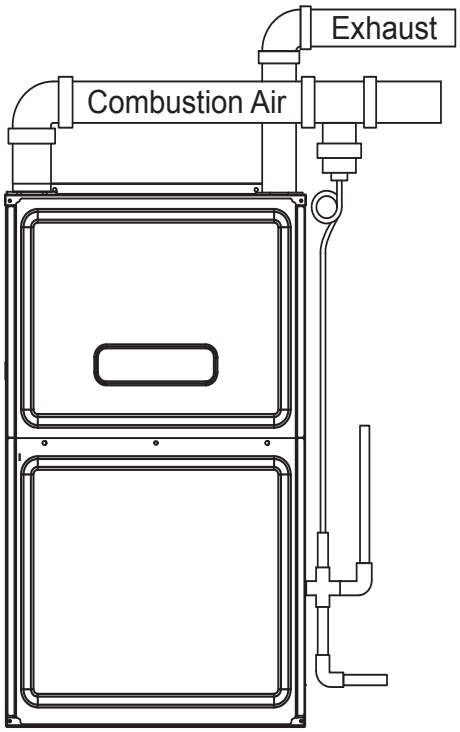


Tee Installation in Intake Pipe
Figure 11

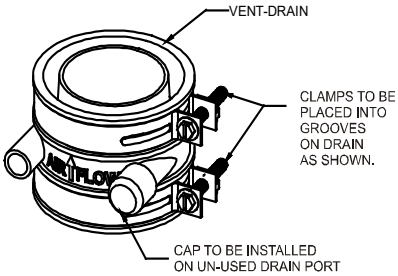


Figure 9

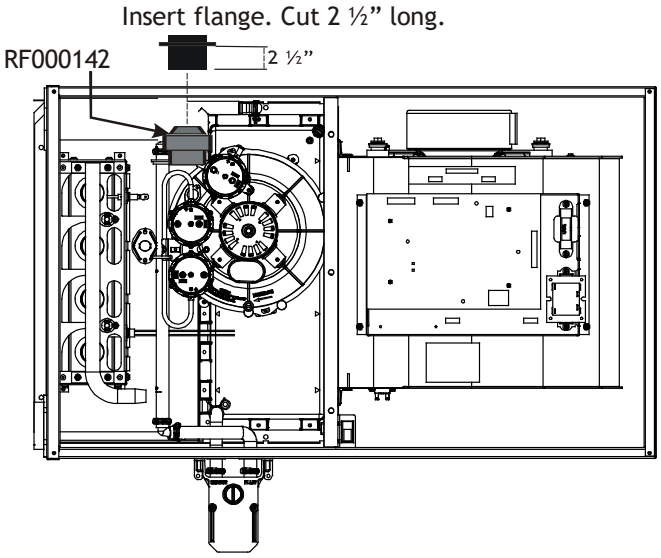


Figure 8

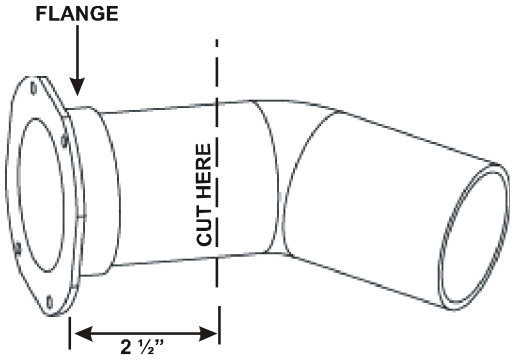


Figure 10

1. Remove the four screws from the vent pipe flange on top the furnace.
2. Remove the internal elbow, vent pipe & gasket.
3. Cut the internal vent pipe 2 1/2” from the flange. Discard the un-flanged section.
4. Remove the 3” plastic plug (in line with the inducer outlet) and insert it in the space vacated by removal of the internal vent pipe.
5. Install the RF000142 drain coupling with arrow facing up, on the draft inducer outlet.
6. Insert the 2 ½” flanged section of pipe with gasket through the 3” hole and connect to RF000142 drain coupling. Secure it with gear clamp provided.
7. Use the four self-tapping screws removed in step 1 to secure flange to cabinet.
8. Connect drain hose to the uncapped port on the RF000142 coupling, refer to page xx, section entitled “Horizontal Installation with Left Side Down – Alternate” for drain connection details

When using the alternate venting location, either in a horizontal left side down installation or a vertical installation using down – venting, the alternate combustion air opening can be used. A locating dimple is located on the right side of the furnace cabinet. The locating dimple is 1-7/8” measured from the front edge of the cabinet in line with the knock out.

To use the alternate combustion air location:

1. Remove screws and combustion air flange and gasket from cabinet.
2. Insert the 3” cabinet plug from the drain bag assembly in the unused combustion air hole.
3. Drill a pilot hole at the cabinet dimple (size dictated by knockout tool used).
4. Use a knockout tool to create a 3” diameter hole.
5. Secure the combustion air flange & gasket to the furnace cabinet using the self-tapping screws removed in step 1.

**WARNING**

**THE RUBBER ELBOW IS NOT DESIGNED TO SUPPORT A LOAD. WHEN THE RUBBER ELBOW IS MOUNTED EXTERNALLY TO THE FURNACE CABINET, EXTREME CARE MUST BE TAKEN TO ADEQUATELY SUPPORT FIELD-SUPPLIED VENT/FLUE PIPING, AS DAMAGE CAN RESULT IN LEAKS CAUSING BODILY INJURY OR DEATH DUE TO EXPOSURE TO FLUE GASES, INCLUDING CARBON MONOXIDE**

**CAUTION**

**BE SURE NOT TO DAMAGE INTERNAL WIRING OR OTHER COMPONENTS WHEN REINSTALLING COUPLING AND SCREWS.**

**DOWN VENTING UPFLOW MODEL FURNACES ONLY**

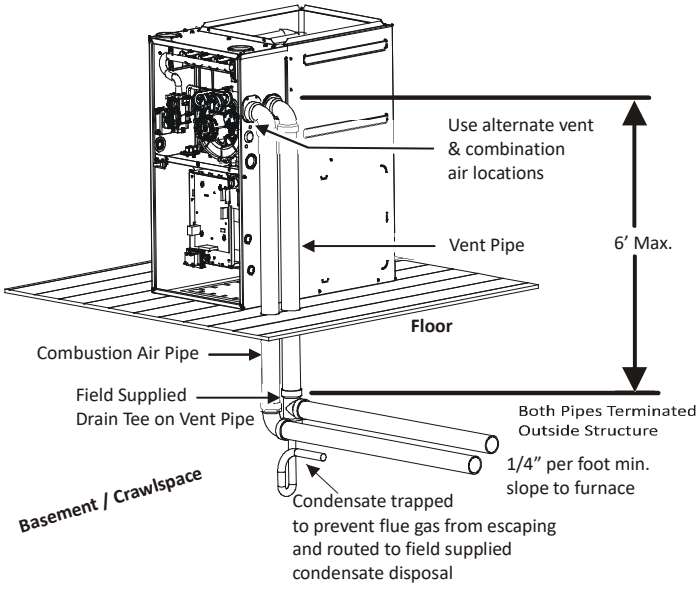


*All piping and fittings must be joined per material manufacturers specifications to prevent separation and flue gas leaks.*

Figure 13

## Pipe Termination

Products of combustion must always be vented outside. A vent pipe must never terminate in an attic, crawl space, or any other part of a dwelling. Follow the vent pipe & intake pipe termination requirements listed below as well as all applicable local, State and National codes.

All terminations (vent and/or intake) must be located at least 12” above ground level or the anticipated snow level.

All vent terminations (non-direct and direct vent) must terminate at least 3 feet above any forced air inlet located within 10 feet.

The vent termination of a non-direct vent application must terminate at least 4 feet below, 4 feet horizontally from, or 1 foot above any door, window, or gravity air inlet into any building.

The vent termination of a direct vent application must terminate at least 12” from any opening through which flue gases may enter a building (door, window, or gravity air inlet).

The vent termination of vent pipe run vertically through a roof must terminate at least 12” above the roof line (or the anticipated snow level) and be at least 12” from any vertical wall (including any anticipated snow build up).

A vent termination shall not terminate over public walkways or over an area where condensate or vapor could create a nuisance or hazard or could be detrimental to the operation of regulators, relief valves, or other equipment.

The combustion air intake termination of a direct vent application should not terminate in an area which is frequently dusty or dirty.

Vent & combustion air pipes may terminate vertically through a roof, or horizontally through an outside wall. The combustion air intake and vent pipe terminations must be in the same atmospheric pressure zone. Vertical vent pipe terminations should be as shown in figure 14. The penetration of pipes through the roof must be sealed water tight with proper flashing such as is used with a plastic plumbing vent.

Horizontal vent pipe terminations should be as shown in the following figures. To secure the pipe passing through the wall and prohibit damage to piping connections, a coupling should be installed on either side of the wall and solvent cemented to a length of pipe connecting the two couplings. The length of pipe should be the wall thickness plus the depth of the socket fittings to be installed on the inside and outside of the wall. The wall penetration should be sealed with silicone caulking material.

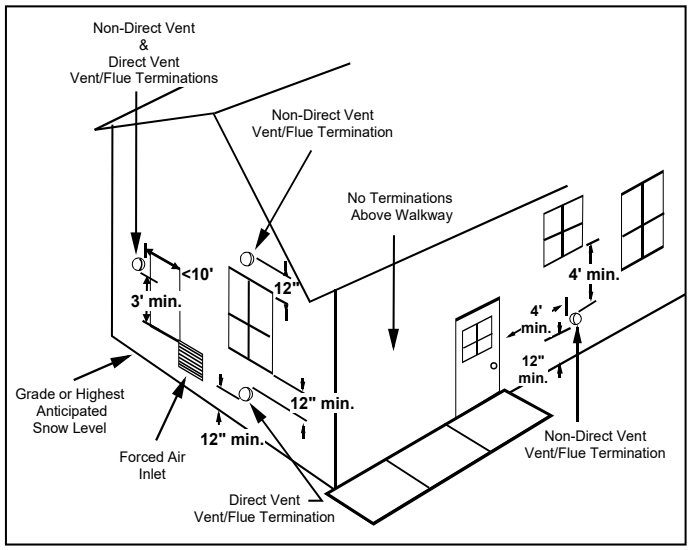


Vent Termination Clearances
Figure 12

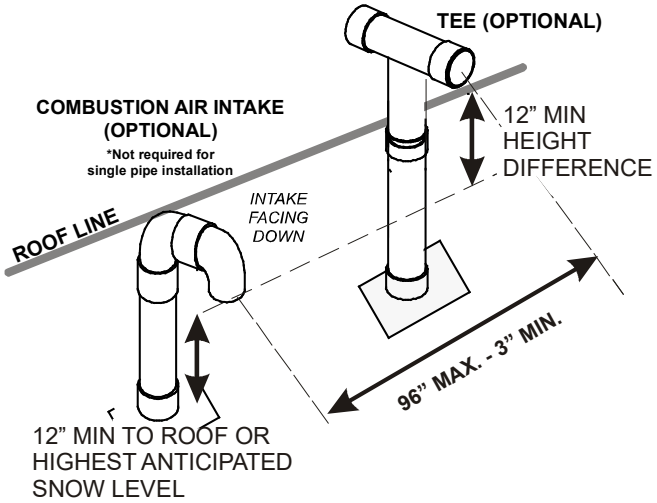


Figure 14

**VENT PIPE TERMINATION OPTIONS**

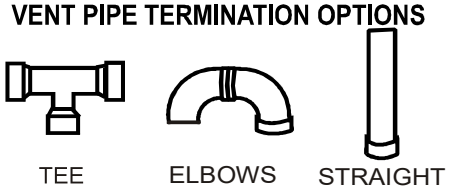


**Figure 15**

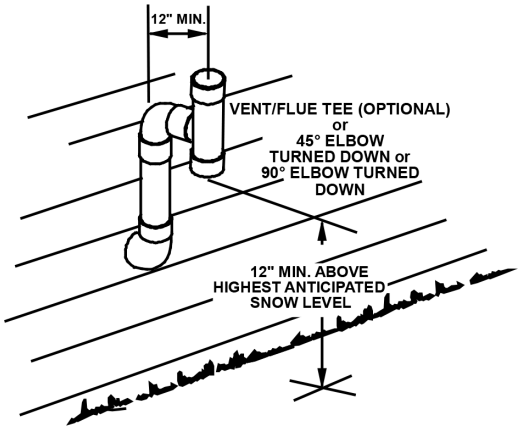


**Horizontal Termination (Single Pipe) Above Highest Anticipated Snow Level**

**Figure 16**

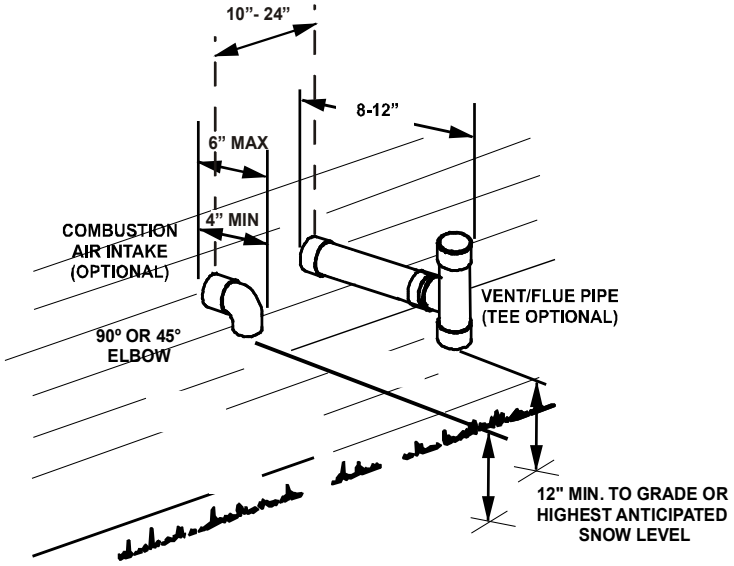


**Standard Horizontal Terminations (Dual Pipe)**

Figure 17

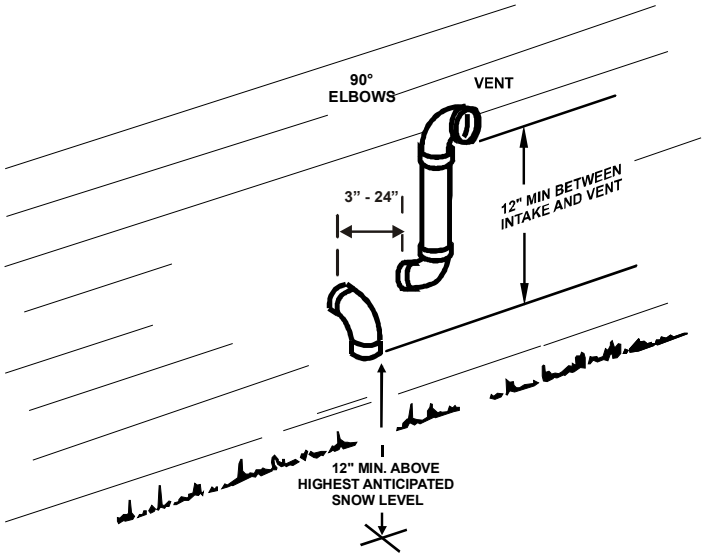


**Alternate Horizontal Vent Termination (Dual Pipe)**

Figure 18

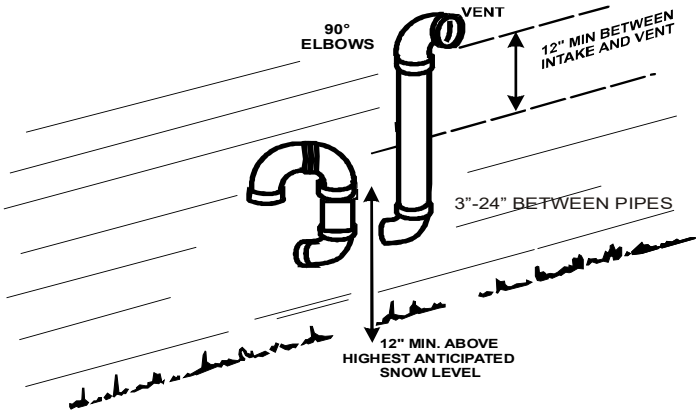


Combustion Air Intake may also be snorkeled

to obtain 12” min ground clearance.

Alternate Vent Termination Above Anticipated Snow Level **(Dual Pipe)**

Figure 19

**Vent & Combustion Air Intake Measurements for Standard Horizontal Terminations (Dual Pipe)**

Center to center = 10” min / 24” max.

Vertical separation: 0” - 24”

Vent termination from wall = 8” min / 12” max.

Combustion air intake from wall = 6” max.

Vent and intake clearance to ground or anticipated snow level = 12” min.

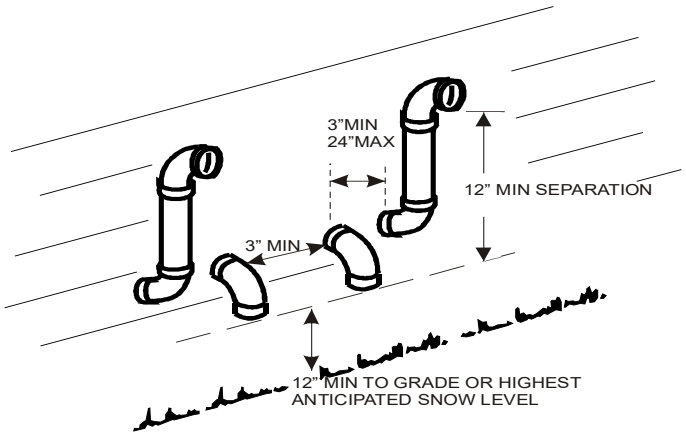


Termination of Multiple Direct Vent Furnaces
Figure 20

## Vent/Intake Terminations For Installation of Multiple Direct Vent Furnaces

If more than one direct vent furnace is to be installed vertically through a common roof top, maintain the same minimum clearances between the exhaust vent and air intake terminations of adjacent units as with the exhaust vent and air intake terminations of a single unit.

If more than one direct vent furnace is to be installed horizontally through a common side wall, maintain the clearances as in the Figure 20. Always terminate all exhaust vent outlets at the same elevation and always terminate all air intakes at the same elevation.

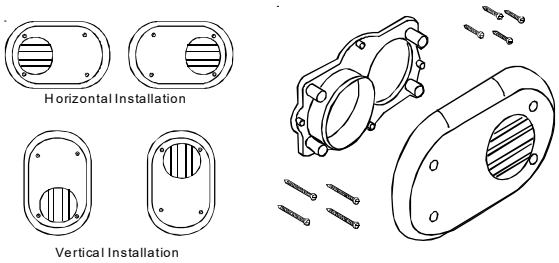


Side Wall Vent Kit
Figure 21

## Concentric Vent Termination

*Refer to the directions provided with the Concentric Vent Kit (DCVK) for installation specifications.*

## Side Wall Vent Kit

This kit is to be used with 2” or 3” direct vent systems. The vent kit must terminate outside the structure and may be installed with the intake and exhaust pipes located side-by-side or with one pipe above the other. These kits are **NOT** intended for use with single pipe (non-direct vent) installations.

***Refer to the directions furnished with the Side Wall Vent Kit (p/n 0170K00000S or 0170K00001S) for installation specifications.***

# *Condensate Drain Lines & Drain Trap*

A condensing gas furnace achieves its high level of efficiency by extracting heat from the products of combustion to the point where condensation takes place. The condensate must be collected in the furnace drain trap and routed to an appropriate drain location in compliance with local and national codes.

Follow the bullets listed below when installing the drain system. Refer to the following sections for specific details concerning furnace drain trap installation and drain hose hook ups.

- The drain trap supplied with the furnace must be used.
- The drain trap must be primed at time of installation.
- The drain line between furnace and drain location must meet local and nation codes.
- The drain line between furnace and drain location must maintain a 1/4 inch per foot downward slope toward the drain.
- Do not trap the drain line in any other location than at the drain trap supplied with the furnace.
- If the drain line is routed through an area which may see temperatures near or below freezing, precautions must be taken to prevent condensate from freezing within the drain line.
- If an air conditioning coil is installed with the furnace, a common drain may be used. An open tee must be installed in the drain line, near the cooling coil, to relieve positive air pressure from the coil’s plenum. This is necessary to prohibit any interference with the function of the furnace’s drain trap.

**NOTE:** In vertical installations, air conditioning coil condensate may drain into the furnace trap as long as there is a trap between the coil and the furnace trap and the drain pipe is not terminating below the water level of the furnace trap.

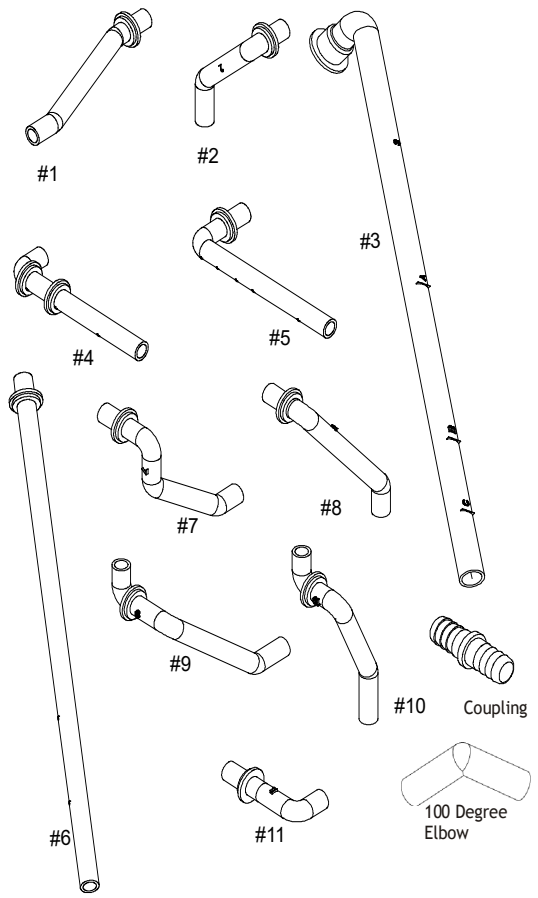


Figure 22

**NOTE:** Drain components shown for information purposes only.

## General Drain Information

All furnace models come with a factory installed drain trap. For vertical installations, the trap will remain in the factory position except for a counterflow when the installer desires the drain to exit the right side. All furnace models installed horizontally require the trap to be relocated. Many drain hoses have a built-in grommet which will provide a cabinet seal when installed. See instructions below for your model and installation position.

***NOTE: Both sides of the drain trap must be primed prior to initial furnace start up***

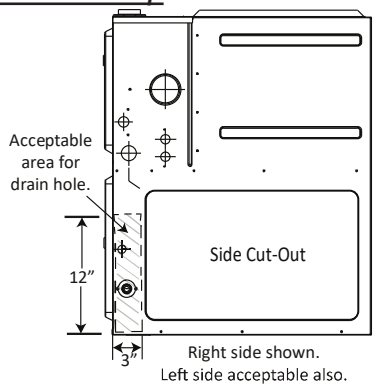


Figure 23

## Field Supplied Drain

Drain the furnace and air conditioning coil if applicable, in compliance with code requirements. In horizontal or counterflow installations, a field installed rubber coupling will allow the drain trap to be removed for cleaning. The drain trap must be primed before initial furnace start up. When an air conditioning coil drain is connected to the field supplied furnace drain, it must be vented. An open tee must be installed at a height no higher than the bottom of the furnace collector box to prevent air conditioning condensate from backing up into the furnace, if the common drain was blocked.

## Upflow Model Installed Vertically

The trap and factory installed hoses remain as shipped. The furnace drain may exit either the right or left side of the furnace cabinet. Both sides of the cabinet have two .875" diameter holes which can be used interchangeably for drain and low voltage wiring purposes. If a higher drain exit is needed, a .875" diameter hole may be added in the area shown in Figure 24. Any unused cabinet opening must be sealed. Do not allow drain hose to sag or trap water.

## Drain Exiting Right Side

1. Locate and Install the 45º pipe / hose drain coupling from the outside of the cabinet (barbed end goes in the cabinet) through hole in the right side of the cabinet and secure with two field supplied #8 self-tapping screws (see Figure 24).
2. Locate the long drain hose #3 and cut at line "A" .
3. Install large end of hose #3 to trap outlet and secure with 1.25" clamp.

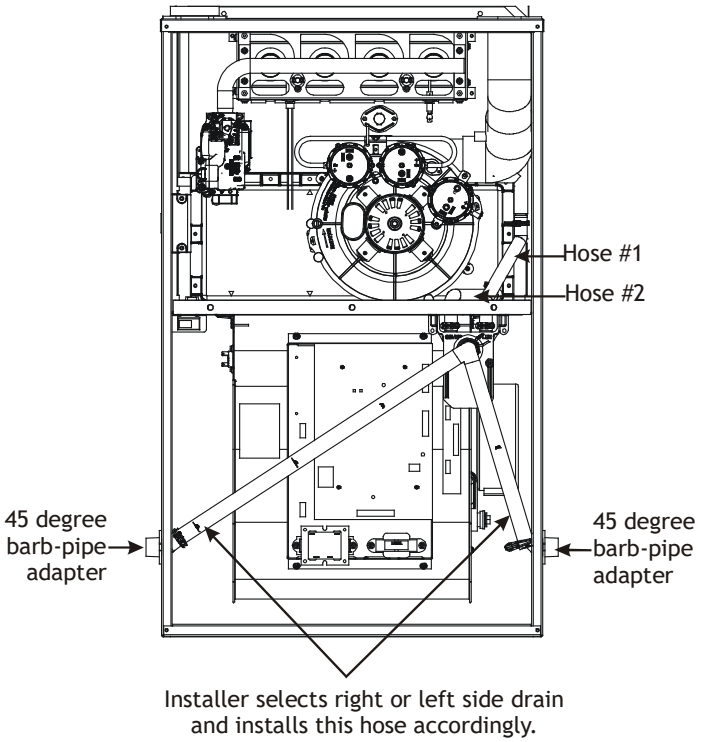


Figure 24

4. Install smaller end of hose #3 on 45º elbow and secure with 1” clamp.
5. Refer to Field Supplied Drain section for instructions on field supplied / installed drain on outlet of furnace trap.

### Drain Exiting Left Side

1. Install the 45 degree pipe / hose drain coupling from the outside of the cabinet (barbed end goes in the cabinet) through the hole in the left side of the cabinet and secure with two field supplied #8 self-tapping screws (see Figure 24).
2. Locate the long drain hose #3 and cut at “B” line for a 17.5” cabinet; cut at line “C” for a 21” cabinet; do not cut for a “D” width cabinet.
3. Install large end of hose #3 to trap outlet and secure with 1.25” clamp.
4. Install smaller end of hose #3 on 45º elbow and secure with 1” clamp.
5. Refer to Field Supplied Drain section for instructions on field supplied / installed drain on outlet of furnace trap.

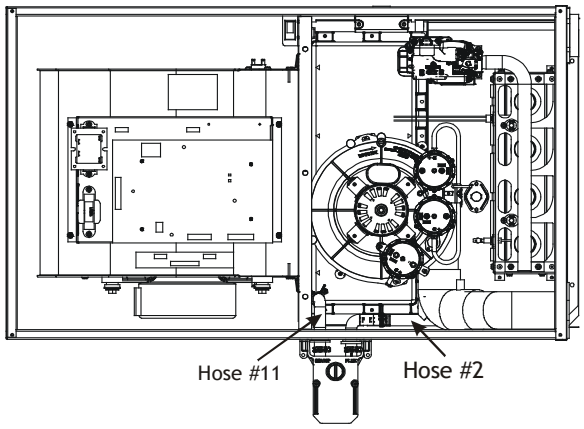


Figure 25

### Upflow Model Installed Horizontally with Right Side Down

*Minimum 5 1/2” clearance is required for the drain trap beneath the furnace.*

1. Remove the clamps from both ends of the drain hoses.
2. Remove the two screws holding the drain trap to the blower deck.
3. Remove the trap and two hoses from the blower deck
4. Remove the two plugs from the right side of the cabinet and install them in the blower deck.
5. (Draining the Vent Elbow ) Locate hose #2 (factory installed) and cut 1” away from the 45 degree bend, discard the 45 degree section. Insert hose #2 from outside the cabinet through the cabinet drain hole nearest the top, secure it to the barbed fitting in the elbow with a red clamp.
6. For models *MSS920403AN and *MSS960403AN; locate the hose #2 (factory installed) and cut 1.5 length from the end of the hose. Insert hose #2 from outside the cabinet through the cabinet’s drain hole nearest to the top. Secure it to the barbed fitting in the elbow with a red clamp.
7. (Draining the Collector Box) Install the non-grommet end of hose #11 from outside the cabinet in the bottom drain hole. Install on collector box and secure with a silver clamp.
8. Use two silver clamps and secure the hoses to drain trap. The trap outlet faces the front of the furnace. Secure the trap to the cabinet using two screws removed in step 2 by inserting the two screws through the large set of holes in the top mounting tabs of the trap into the two pre-drilled holes in the side of the cabinet.
9. Refer to Field Supplied Drain section for instructions on field supplied / installed drain on outlet of furnace trap.

### Upflow Model Installed Horizontally with Left Side Down

*Minimum 5 1/2” clearance is required for the drain trap beneath the furnace.*

**Also see Front Cover Pressure Switch Tube Location on page 10.*

1. Remove the clamps from the two drain tubes on the trap.
2. Remove the two screws holding the drain trap to the blower deck.
3. Remove the trap and hoses from the blower deck.

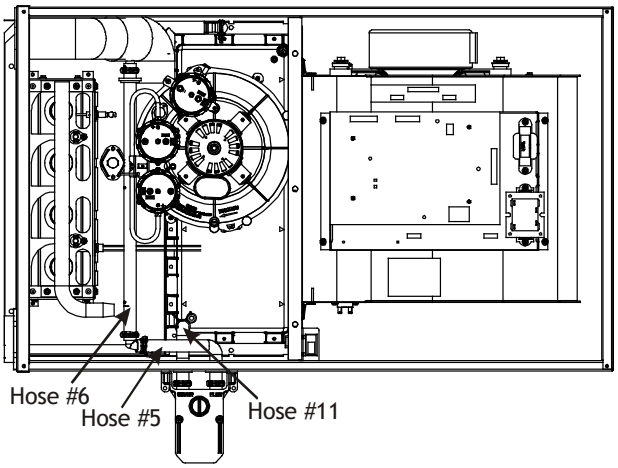


Figure 26

4. Remove the two plugs from the left side of the cabinet and install them in the blower deck.
5. (Draining the Vent Elbow) Locate hose #6. Measuring from the non-grommet end; cut off and discard 1 ½” for a “D” width cabinet, 5” for a “C” width cabinet, 8 ½” for a “B” width cabinet.
6. Remove the rubber plug from vent – drain elbow side port. Place hose #6 on the vent – drain elbow side port and secure with a silver clamp .

7. ***Unused vent-drain elbow drip leg port must be sealed to prevent flue gases from escaping. Insert the rubber plug removed in step 6 into the unused elbow drain port. Inserting a blunt tool such as a 3/16" Allen wrench into the center of the rubber plug will stretch the plug and allow complete insertion.***
8. Locate hose #5 and cut 3" from the non-grommet end. Discard the section without the grommet.
9. Insert the cut end of tube #5 through the lower cabinet drain hole.
10. Connect hose #6 & hose #5 using 100º elbow and secure with two red clamps
11. (Draining the Collector Box) Remove cap from left side collector box drain port (bottom in horizontal left position) and install it on right side (top) collector box drain port.
12. Install the non-grommet end of hose #11 from outside the cabinet in the upper drain hole. Install on collector box and secure with a silver clamp.
13. Use two silver clamps and secure the hoses to drain trap. The trap outlet faces the front of the furnace. Secure the trap to the cabinet using two screws removed in step 2 by inserting the two screws through the large set of holes in the top mounting tabs of the trap into the two pre-drilled holes in the side of the cabinet. [Removed: Place cap on vent...]
14. Refer to Field Supplied Drain section for instructions on field supplied / installed drain on outlet of furnace trap.

## Upflow Model Installed Horizontally With Left Side Down - Alternate

***Also see Front Cover Pressure Switch Tube Location on Page 10.***

1. (Draining the RF000142 Coupling) Locate hose #2 (factory installed). Cut off and discard the 45° radius end.
2. Install 90° radius end of hose #2 on RF000142 drain outlet and secure with a red clamp.
3. Insert coupling in hose #2 and secure with a red clamp.
4. Locate hose #5 and cut 3" from the non-grommet end. Discard the section without the grommet.
5. Insert the cut end of tube #5 through the lower cabinet drain hole.
6. Insert 100 degree elbow in the cut end of hose #5.
7. Locate hose #6. Using red clamps, connect between the coupling and 100 degree elbow, cutting off excess tubing.
8. (Draining the Collector Box) Remove cap from left side collector box drain port (bottom in horizontal left position) and install it on right side (top) collector box drain port and secure with a red clamp.
9. Install the non-grommet end of hose #11 from outside the cabinet in the upper drain hole. Install on collector box and secure with a silver clamp.
10. Use two silver clamps and secure the hoses to drain trap. The trap outlet faces the front of the furnace. Secure the trap to the cabinet using two screws removed in step 2 by inserting the two screws through the large set of holes in the top mounting tabs of the trap.

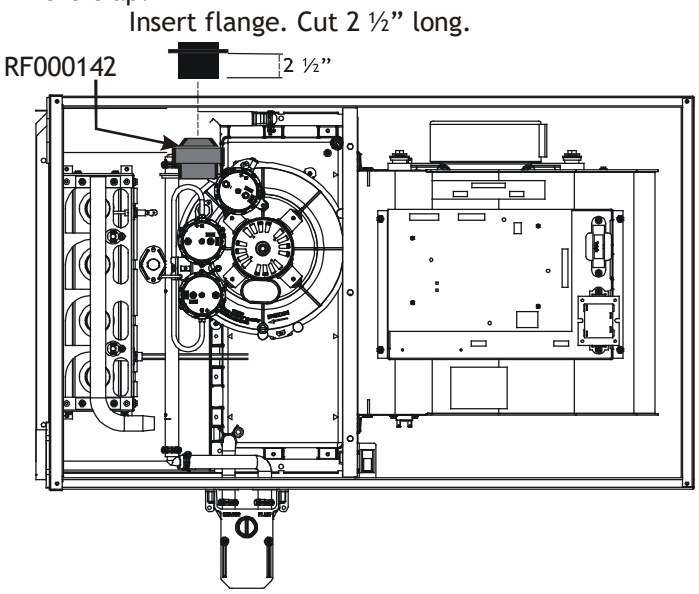


Figure 27

## CounterFlow Model Installed Vertically

The furnace drain may exit the right or left side of the furnace cabinet (left side preferred) Trap and factory installed hoses remain as shipped if the drain will exit the left side of the cabinet. Draining from the right side requires relocation of the trap to outside the cabinet.

## Drain Exiting Left Side (See Figure 28)

1. Install a field supplied rubber coupling secured with a 1 1/4" clamp to enable removing the trap for future cleaning. Alternately, a PVC fitting may be glued on the trap outlet.
2. Install drain per local and National codes.

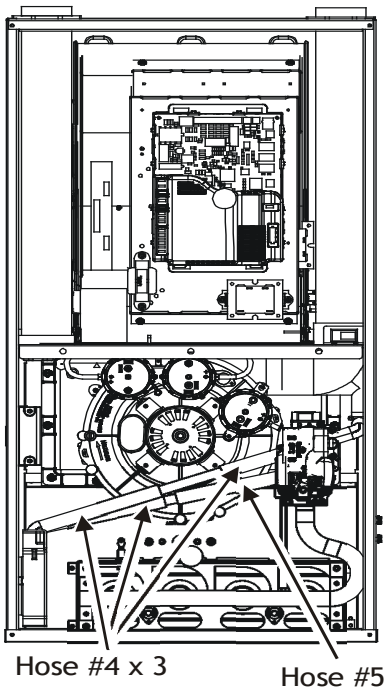


Figure 28

## Drain Exiting Right Side (See Figure 29)

1. Removing the gas manifold assembly will provide better access when re-locating the trap. To remove the gas manifold, remove the four screws that fasten the gas manifold assembly to the bracket.
2. Remove hose clamps and hoses from trap.
3. Remove trap.
4. (Draining the Vent Elbow) Insert the non-grommet end hose #10 into the cabinet back drain hole. Insert a coupling into the drip leg of the vent-drain elbow and secure with a silver clamp. Secure hose #10 on vent - drain elbow barb fitting with a silver clamp.
5. (Draining the Collector Box) Insert non-grommet end of hose #9 into the cabinet front drain hole and secure on collector box drain port with a silver clamp.
6. Mate the drain trap inlets to the hoses and secure with silver clamps.
7. Line up the trap mounting holes with the pre-drilled holes in the furnace and secure with 2 screws removed in step 2.
8. Refer to Field Supplied Drain section for instructions on field supplied / installed drain on outlet of furnace trap.

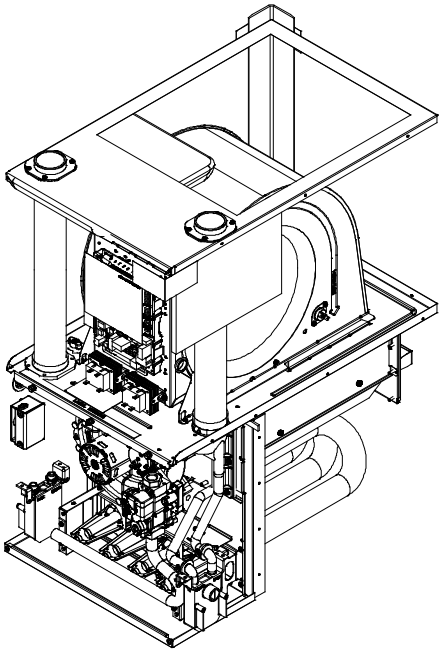

Figure 29

**WARNING**

**HIGH VOLTAGE !**

**To avoid personal injury or death due to electrical shock, disconnect electrical power before servicing or changing any electrical wiring.**

**CAUTION**

**Label all wires prior to disconnection when servicing controls. Wiring errors can cause improper and dangerous operation. Verify proper operation after servicing.**

**WARNING**

**HIGH VOLTAGE !**

**To avoid the risk of electrical shock, wiring to the unit must be polarized and grounded.**

## Counterflow Model Installed Horizontally with Right Side Down (See Figure 30)

*Minimum 5 1/2" clearance is required for the drain trap beneath the furnace.*

NOTE: For horizontal installations, some of the required hoses are found in the factory-installed hose assemblies.

Remove the hose clamps to obtain the respective hoses needed for installation, and install per the following directions.

1. Remove the drain trap and factory installed drain tube assemblies.
2. Remove two 1'' plugs from right side of cabinet.
3. (Draining the Collector Box) From outside the cabinet, insert the non-grommet end hose #7 into the back drain hole and secure to collector box drain port using a silver clamp.
4. (Draining the Vent Elbow) Insert the straight barbed coupling into the vent - drain elbow drip leg and secure with a red clamp.

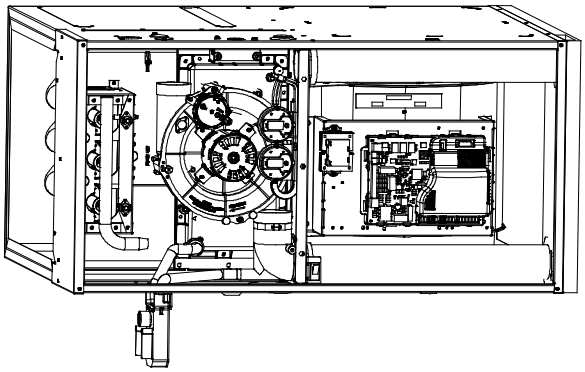

Figure 30

5. From outside the cabinet, insert the non-grommet end of hose #8 into the front cabinet drain hole and secure on the vent - drain elbow barb fitting using a red clamp.
6. Place the drain hoses on the trap inlets and secure with silver clamps. The outlet of the trap must face the original bottom of furnace.
7. Using the two sheet metal screws provided in the cabinet, secure the trap to the furnace.
8. Refer to Field Supplied Drain section for instructions on field supplied/installed drain on outlet of furnace trap.

## Counterflow Model Installed Horizontally with Left Side Down (See Figure 31)

*Minimum 5 1/2" clearance is required for the drain trap beneath the furnace.*

*Also see Front Cover Pressure Switch Tube Location on page 10.

1. Remove the factory installed drain trap and hose assemblies. Leave the 100° elbow inserted and clamped in the vent-drain elbow.
2. Remove two 1"plugs from left side of cabinet
3. (Draining the Collector Box) Remove the cap from the left side of the collector box drain port (bottom in horizontal left position) and install it on right side drain port.
4. Place radius end of hose #4 (factory installed) on the collector box drain port and secure with a silver clamp.
5. Insert hose #2 from outside the cabinet in the front drain hole.
6. Connect hose #4 & hose #2 together using a straight barbed coupling and two gold clamps (factory installed).
7. (Draining the Vent Elbow) Remove rubber plug from vent – drain elbow side port.
8. **The unused vent-drain elbow drip leg port must be plugged to prevent flue gases from escaping.** Insert rubber plug removed in step 7 into the 100° elbow. (Inserting a blunt tool such as a 3/16'' Allen wrench into the center of the rubber plug will stretch the plug and allow complete insertion)

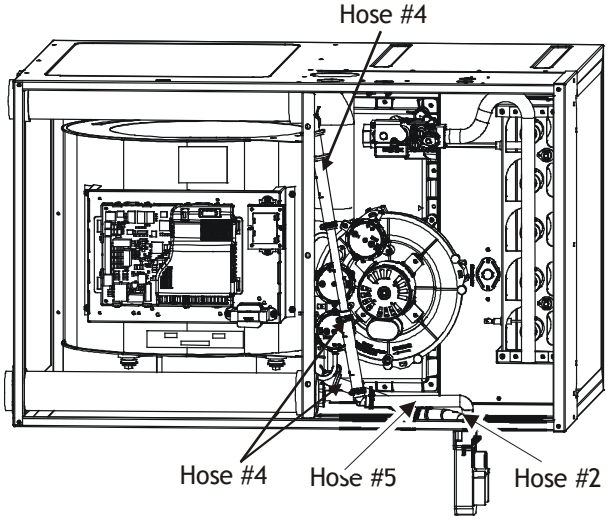


Figure 31

9. Place radius end of hose #4 on the side port of vent – drain elbow and secure with a gold clamp.
10. Insert a ½" diameter PVC pipe (factory installed) into hose #4 and secure with a gold clamp.
11. Insert the non-grommet end of hose #5 (factory installed) from outside the cabinet in the back drain hole.
12. Insert 100º elbow in hose #5 and secure with a red clamp.
13. Locate hose #4 and cut a cut off a 4" straight section and discard the radius end.
14. Connect the 4" straight section of hose #4 to the 100º elbow and the PVC pipe and secure with red clamps.
15. Connect the hoses to the trap inlets and secure with silver clamps, drain trap outlet must point to the original bottom of the furnace.
16. Using the two sheet metal screws provided in the cabinet, secure the trap to the furnace.
17. Refer to Field Supplied Drain section for instructions on field supplied / installed drain on outlet of furnace trap.

## *Electrical Connections*

### Wiring Harness

The wiring harness is an integral part of this furnace. Wires are color coded for identification purposes. Refer to the wiring diagram for wire routings. If any of the original wire as supplied with the furnace must be replaced, it must be replaced with wiring material having a temperature rating of at least 105° C. Any replacement wiring must be a copper conductor.

### 115 Volt Line Connections

Before proceeding with electrical connections, ensure that the supply voltage, frequency, and phase correspond to that specified on the unit rating plate. Power supply to the furnace must be NEC Class 1, and must comply with all applicable codes. The furnace must be electrically grounded in accordance with local codes or, in their absence, with the latest edition of The National Electric Code, ANSI NFPA 70 and/or The Canadian Electric Code CSA C22.1.

**WARNING**

**HIGH VOLTAGE !**

**To avoid personal injury or death due to electrical shock, disconnect electrical power before servicing or changing any electrical wiring.**

| | |
|---|---|
| Humidifier | 1.0 Amp maximum at 120 VAC |
| Electronic Air Cleaner | 1.0 Amp maximum at 120 VAC |

Use a separate fused branch electrical circuit containing properly sized wire, and fuse or circuit breaker. The fuse or circuit breaker must be sized in accordance with the maximum overcurrent protection specified on the unit rating plate. An electrical disconnect must be provided at the furnace location.

Connect hot, neutral, and ground wires as shown in the wiring diagram located on the unit's blower door. For direct vent applications, the cabinet opening to the junction box must be sealed air tight using either an UL approved bushing such as Heyco Liquid Tight or by applying non-reactive UL approved sealant to bushing.

Line polarity must be observed when making field connections. Line voltage connections can be made through either the right or left side panel. The furnace is shipped configured for a left side (right side for counterflows) electrical connection with the junction box located inside the burner compartment. To make electrical connections through the opposite side of the furnace, the junction box must be relocated to the other side of the burner compartment prior to making electrical connections. To relocate the junction box, follow the steps shown in the Junction Box Relocation section.

**WARNING**

**Edges of sheet metal holes may be sharp. Use gloves as a precaution when removing hole plugs.**

**WARNING**

**To prevent personal injury or death due to electric shock, disconnect electrical power before installing or servicing this unit.**

**WARNING**

**HIGH VOLTAGE !**

**To avoid the risk of injury, electrical shock or death, the furnace must be electrically grounded in accordance with local codes or in their absence, with the latest edition of the National Electric Code.**

**WARNING**

**To avoid the risk of injury, electrical shock or death, the furnace must be electrically grounded in accordance with local codes or, in their absence, with the latest edition of the National Electrical Code.**

### 115 Volt Line Voltage Connection of Accessories (Humidifier and Electronic Air Cleaner)

The furnace integrated control module is equipped with line voltage accessory terminals for controlling power to an optional field-supplied humidifier and/or electronic air cleaner.

Turn OFF power to the furnace before installing any accessories. Follow the humidifier or air cleaner manufacturers' instructions for locating, mounting, grounding, and controlling these accessories. Accessory wiring connections are to be made through the 1/4" quick connect terminals provided on the furnace integrated control module. The humidifier hot terminal is identified as 120V HUM-H, its neutral terminal is identified as 120V HUM-N. The electronic air cleaner hot terminal is identified as EAC-H, its neutral terminal is identified as 120V EAC-N. All field wiring must conform to applicable codes. Connections should be made as shown. (See Figure 32)

If it is necessary for the installer to supply additional line voltage wiring to the inside of the furnace, the wiring must conform to all local codes, and have a minimum temperature rating of 105°C. All line voltage wire splices must be made inside the furnace junction box.

The integrated control module humidifier terminal 120V HUM-H is energized with 115 volts whenever the induced draft blower is energized. This terminal can also be used to provide 115 volt power to a humidifier transformer. The remaining primary transformer wire would be connected to the Line N on the control board. The integrated control module electronic air cleaner terminals EAC-H is energized with 115 volts whenever the circulator blower is energized.

**NOTE:** Wire routing must not to interfere with circulator blower operation, filter removal, or routine maintenance.

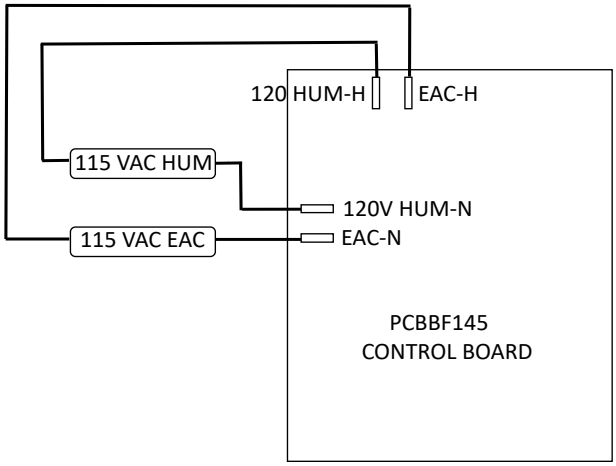


Figure 32

## Connection of 24 Volt Humidifier

The integrated control module single humidifier terminal "24 VHUM" is energized with 24 volts whenever the induced draft blower is energized. Connect the common side of the 24 volt humidifier to the "C" terminal of the thermostat terminal strip on the control board.

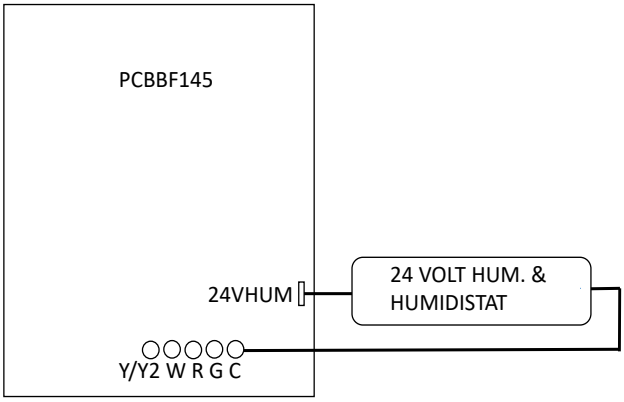


Figure 33

## Junction Box Relocation

**Line voltage connections can be made through either the right or left side panel. The furnace is shipped configured for a left side electrical connection. To make electrical connections through the opposite side of the furnace, the junction box must be relocated to the left side prior to making electrical connections. To relocate the junction box, perform the following steps.**

1. Remove the burner compartment door.
2. Remove and save the two screws securing the junction box to the side panel.
3. Relocate junction box and associated plugs and grommets to opposite side panel. Secure with screws removed in step

**IMPORTANT NOTE**

**Wire routing must not interfere with circulator blower operation, filter removal or routine maintenance.**

To ensure proper unit grounding, the ground wire should run from the furnace ground screw located inside the furnace junction box all the way back to the electrical panel. **NOTE:** Do not use gas piping as an electrical ground. To confirm proper unit grounding, turn off the electrical power and perform the following check.

1. Measure resistance between the neutral (white) connection and one of the burners.
   Resistance should measure 10 ohms or less.

This furnace is equipped with a blower door interlock switch which interrupts unit voltage when the blower door is opened for servicing. Do not defeat this switch.

## 24 Volt Thermostat Wiring

Low voltage connections can be made through either the right or left side panel. Thermostat wiring entrance holes are located in the blower compartment. The following figure shows connections for a "heat/cool system".

This furnace is equipped with a 40 VA transformer to facilitate use with most cooling equipment. Consult the wiring diagram, located on the blower compartment door, for further details of 115 Volt and 24 Volt wiring.

**WARNING**

**HIGH VOLTAGE !**

**To avoid personal injury or death due to electrical shock, disconnect electrical power before servicing or changing any electrical wiring.**

## Single-Stage Heating Thermostat Application

A single-stage thermostat with only one heating stage is needed to control this furnace.

## Fossil Fuel Applications

This furnace can be used in conjunction with a heat pump in a fossil fuel application. A fossil fuel application refers to a combined gas furnace and heat pump installation which uses an outdoor temperature sensor to determine the most cost efficient means of heating (heat pump or gas furnace).

Strictly follow the wiring guidelines in the fossil fuel kit installation instructions. All furnace connections must be made to the furnace two-stage integrated control module and the "FURNACE" terminal strip on the fossil fuel control board.

### Twinning

Furnaces may be twinned without the use of a twinning kit. Furnaces must be the same model and equipped with PCBBF145 control boards. Follow the diagram provided in this manual. Connection of the "twin" terminals of each control together will allow simultaneous operation of two or more furnace indoor blowers to operate synchronously on a common duct system. Field installed low voltage thermostat wiring, 3/16" terminals are required to make this connection. An isolating relay (24 VAC coil & N/O SPST) contacts is also required if the furnaces are not fed from the same line voltage phase. A pulsing DC signal is used to share the call for fan operation between furnaces. The duration of the pulse width determines the speed that the reading control will energize its blower motor.

**CAUTION**

**To prevent unreliable operation or equipment damage, the gas manifold pressure must be as specified on the unit rating plate. Only minor adjustments should be made by adjusting the gas valve pressure regulator.**

**WARNING**

**Possible property damage, personal injury or death may occur if the correct conversion kits are not installed. The appropriate kits must be applied to ensure safe and proper furnace operation. All conversions must be performed by a qualified installer or service agency.**

## *Gas Supply and Piping*

| INLET GAS SUPPLY PRESSURE | | |
|---|---|---|
| Natural Gas | Minimum: 4.5" w.c. | Maximum: 10.0" w.c. |
| Propane Gas | Minimum: 11.0" w.c. | Maximum: 13.0" w.c. |

The furnace rating plate includes the approved furnace gas input rating and gas types. The furnace must be equipped to operate on the type of gas applied. This includes any conversion kits required for alternate fuels and/or high altitude.

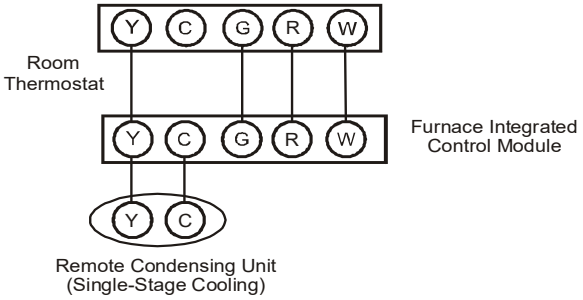


**Figure 34**

Inlet gas supply pressures must be maintained within the ranges specified in the following table. The supply pressure must be constant and available with all other household gas fired appliances operating. The minimum gas supply pressure must be maintained to prevent unreliable ignition. The maximum must not be exceeded to prevent unit overfiring.

**WARNING**

**To avoid possible unsatisfactory operation of equipment damage due to underfiring or equipment, use the proper size of natural/propane gas piping needed when running pipe from the meter/tank to the furnace.**

### High Altitude Installation

When this furnace is installed at high altitude, the appropriate High Altitude Kit including orifices and a pressure switch(s) must be installed. These changes are necessary to compensate for the natural reduction in the density of both the gas fuel and the combustion air at higher altitude.

Installation of this furnace at altitudes above 7000 ft (2134 m), shall be made in accordance with the Listed High Altitude Conversion Kit available with this furnace.

Do not de-rate the furnace by adjusting the manifold pressure to a lower pressure than specified on the furnace rating plate. The combination of the lower air density and a lower manifold pressure will prohibit the burner orifice from drawing the proper amount of air into the burner. This may cause incomplete combustion, flashback, and yellow tipping.

In some areas the gas supplier may artificially de-rate the gas in an effort to compensate for the effects of altitude. If the gas is artificially de-rated, the appropriate orifice size must be determined based upon the BTU/ft3 content of the de-rated gas and the altitude. Refer to the National Fuel Gas Code, NFPA 54/ANSI Z223.1, and information provided by the gas supplier to determine the proper orifice size. A different pressure switch may be required at high altitude regardless of the BTU/ft3 content of the fuel used. Consult the furnace Specification Sheet. All conversions must be performed by a qualified installer, or service agency.

### Propane Gas Conversion

This furnace is shipped from the factory configured for natural gas at standard altitude. To operate this furnace on L.P. gas, a LPM-07 LP Conversion kit must be used. Propane gas installations require an orifice and spring change to compensate for the energy content difference between natural and propane gas.

For furnaces being converted to LP gas, it is strongly recommended that a LPLP03 kit also be installed. The use of this kit will prevent the furnace from firing when the LP gas supply pressure is too low to support proper combustion.

All conversions must be performed by a qualified installer, or service agency.

## Gas Valve

This unit is equipped with a 24 volt gas valve controlled during furnace operation by the integrated control module. As shipped, the valve is configured for natural gas. The valve is field convertible for use with propane gas by replacing the regulator spring with a propane gas spring from an appropriate manufacturer's propane gas conversion kit. Taps for measuring the gas supply pressure and manifold pressure are provided on the valve.

The gas valve has a manual ON/OFF control located on the valve itself. This control may be set only to the "ON" or "OFF" position. Refer to the lighting instructions label or *Startup Procedure & Adjustment* for use of this control during start up and shut down periods.

## Gas Piping Connections

The gas piping supplying the furnace must be properly sized based on the gas flow required, specific gravity of the gas, and length of the run. The gas line installation must comply with local codes, or in their absence, with the latest edition of the National Fuel Gas Code, NFPA 54/ANSI Z223.1 or CAN/CSA B149.1-15 in Canada.

To connect the furnace to the building's gas piping, the installer must supply a ground joint union, drip leg, manual shutoff valve, and line and fittings to connect to gas valve. In some cases, the installer may also need to supply a transition piece from 1/2" pipe to a larger pipe size.

The following stipulations apply when connecting gas piping. Refer to *Gas Piping Connections* figure for typical gas line connections to the furnace.

- Gas piping must be supported external to the furnace cabinet so that the weight of the gas line does not distort the burner rack, manifold or gas valve.
- Use black iron or steel pipe and fittings for building piping. Where possible, use new pipe that is properly chamfered, reamed, and free of burrs and chips. If old pipe is used, be sure it is clean and free of rust, scale, burrs, chips, and old pipe joint compound.
- Use pipe joint compound on male threads ONLY. Always use pipe joint compound (pipe dope) that is APPROVED FOR ALL GASSES. DO NOT apply compound to the first two threads.
- Use ground joint unions.
- Install a drip leg to trap dirt and moisture before it can enter the gas valve. The drip leg must be a minimum of three inches long.
- Install a 1/8" NPT pipe plug fitting, accessible for test gauge connection, immediately upstream of the gas supply connection to the furnace.
- Always use a back-up wrench when making the connection to the gas valve to keep it from turning. The orientation of the gas valve on the manifold must be maintained as shipped from the factory. Maximum torque for the gas valve connection is 375 in-lbs; excessive over-tightening may damage the gas valve.
- Install a manual shutoff valve between the gas meter and unit within six feet of the unit. If a union is installed, the union must be downstream of the manual shutoff valve, between the shutoff valve and the furnace.
- Tighten all joints securely.

**Natural Gas Capacity of Pipe**
**In Cubic Feet of Gas Per Hour (CFH)**

| Length of Pipe in Feet | Nominal Black Pipe Size | | | | |
|---|---|---|---|---|---|
| | 1/2" | 3/4" | 1" | 1 1/4" | 1 1/2" |
| 10 | 132 | 278 | 520 | 1050 | 1600 |
| 20 | 92 | 190 | 350 | 730 | 1100 |
| 30 | 73 | 152 | 285 | 590 | 980 |
| 40 | 63 | 130 | 245 | 500 | 760 |
| 50 | 56 | 115 | 215 | 440 | 670 |
| 60 | 50 | 105 | 195 | 400 | 610 |
| 70 | 46 | 96 | 180 | 370 | 560 |
| 80 | 43 | 90 | 170 | 350 | 530 |
| 90 | 40 | 84 | 160 | 320 | 490 |
| 100 | 38 | 79 | 150 | 305 | 460 |

(Pressure 0.5 psig or less and pressure drop of 0.3" W.C.; Based on 0.60 Specific Gravity Gas)

$$\text{CFH} = \frac{\text{BTUH Furnace Input}}{\text{Heating Value of Gas (BTU/Cubic Foot)}}$$

- Connection method must be in compliance with all local and national codes. US: National Fuel Gas Code (NFGC) NFPA 54-2012/ANSI Z223.1-2012 and the Installation Standards, Warm Air Heating and Air Conditioning Systems ANSI/NFPA 90B.

  In Canada, CANADA: National Standard of Canada, Natural Gas and Propane Installation Code (NSCNGPIC) CSA B149.1-15.

  Connect the furnace to the building piping by one of the following methods:

  - Rigid metallic pipe and fittings.
  - Semi-rigid metallic tubing and metallic fittings. Aluminum alloy tubing must not be used in exterior locations. In order to seal the grommet cabinet penetration, rigid pipe must be used to reach the outside of the cabinet. A semi-rigid connector to the gas piping may be used from there.
- Use listed gas appliance connectors in accordance with their instructions. Connectors must be fully in the same room as the furnace.
- Protect connectors and semi-rigid tubing against physical and thermal damage when installed. Ensure aluminum-alloy tubing and connectors are coated to protect against external corrosion when in contact with masonry, plaster, or insulation, or subjected to repeated wetting by liquids such as water (except rain water), detergents, or sewage.

The gas piping may enter the left or right side of the furnace cabinet. The installer must supply rigid pipe long enough to reach the outside of the cabinet to seal the grommet cabinet penetration. A semi-rigid connector to the gas piping can be used outside the cabinet per local codes. 1/2" NPT pipe and fittings are required. For models with an "L" shaped manifold, a 4 1/2" long nipple is required. For models with a hook shaped manifold, a 2" long nipple is required.

A semi-rigid connector to the gas piping can be used outside the cabinet per local codes. From the elbow, the length of pipe and the fittings required will vary by the side chosen, location of union and cabinet width. The union may be placed inside or outside of the cabinet.

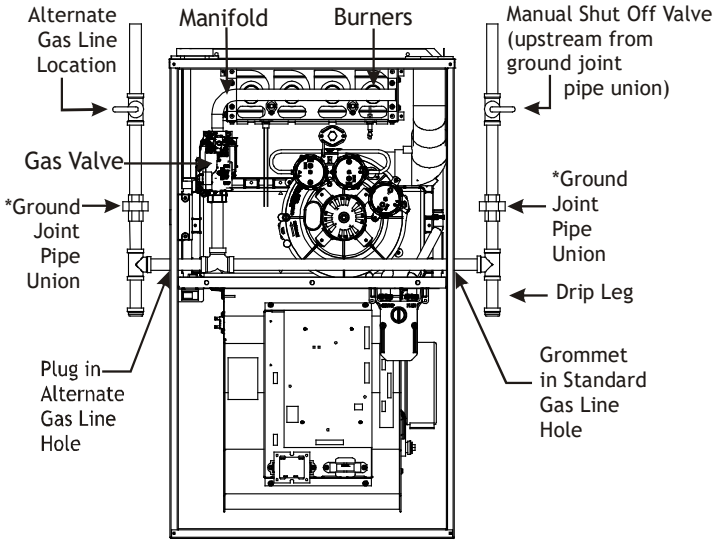


**NOTE: Union may be inside furnace cabinet where allowed by local codes.*

UPFLOW
**Figure 35**

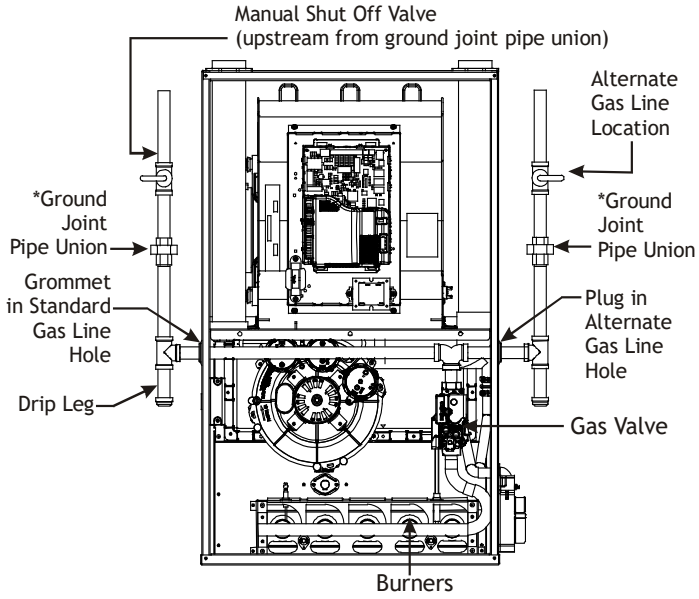


**NOTE: Union may be inside furnace cabinet where allowed by local codes.*

COUNTERFLOW
**Figure 36**

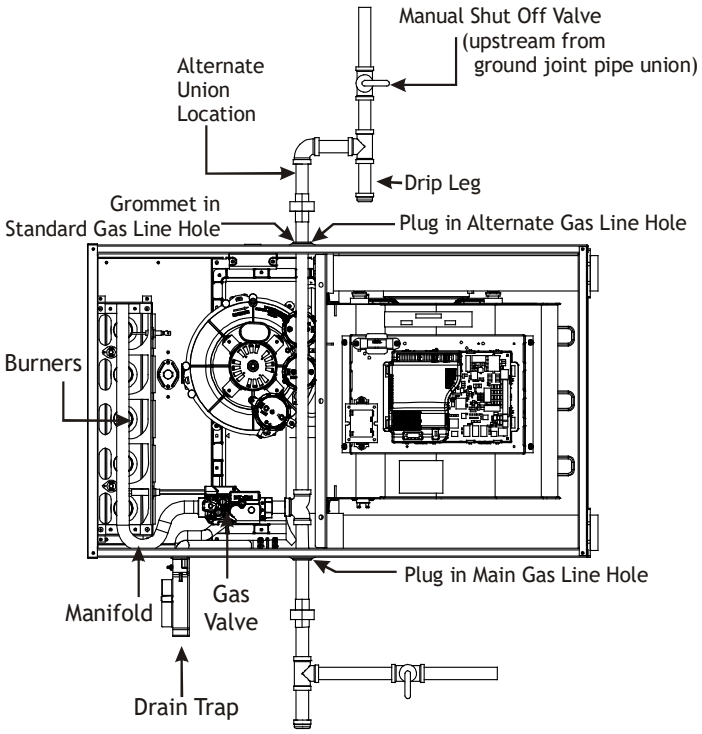


**UPFLOW - HORIZONTAL LEFT**
**Figure 37**

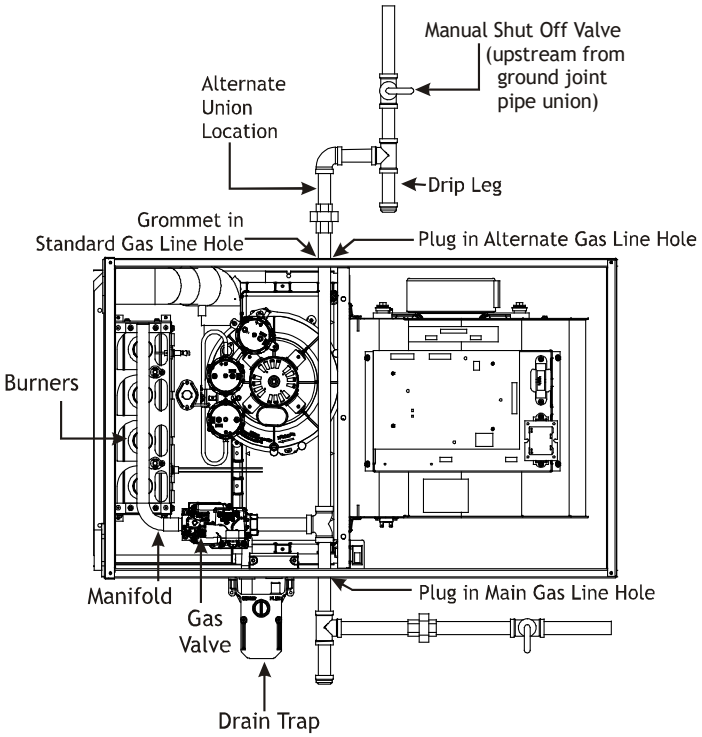


COUNTERFLOW - HORIZONTAL RIGHT
**Figure 38**

TWINNING CONNECTION DIAGRAM

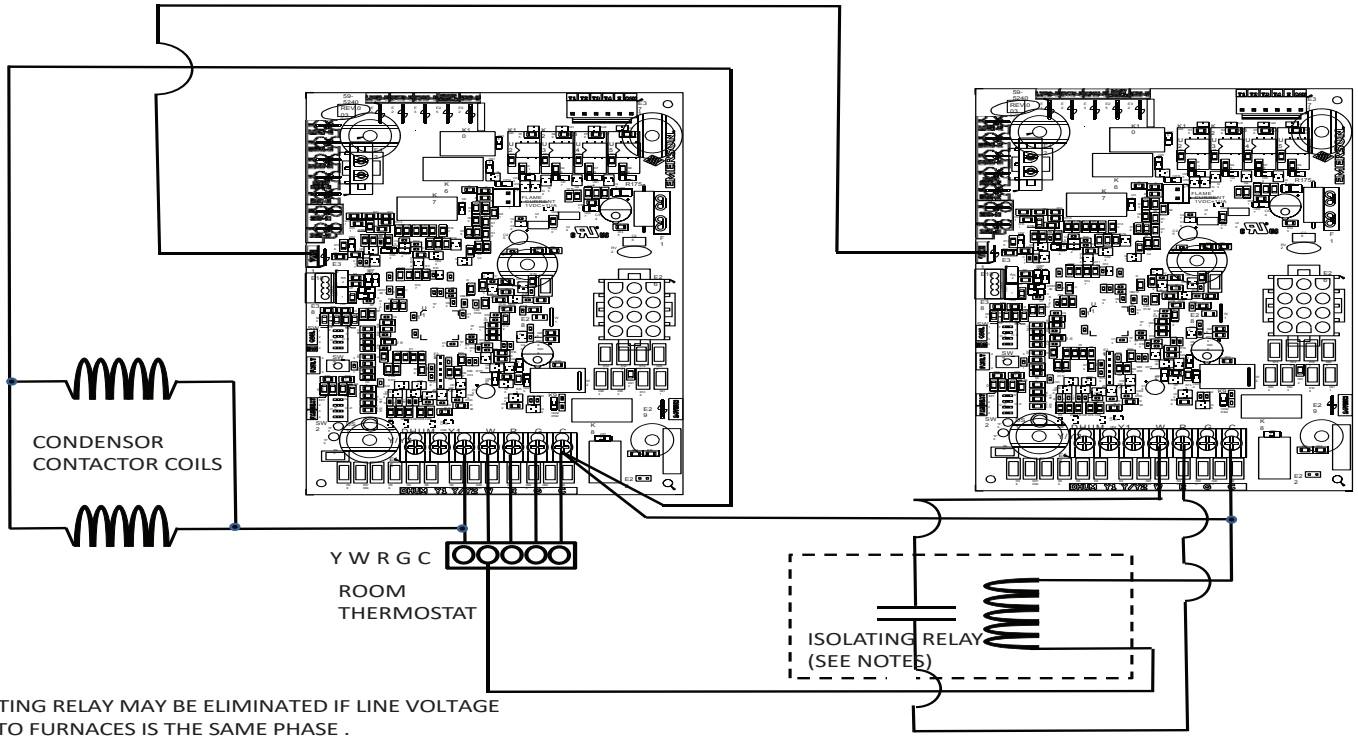


NOTES:
1. ISOLATING RELAY MAY BE ELIMINATED IF LINE VOLTAGE SUPPLY TO FURNACES IS THE SAME PHASE .
TO VERIFY PHASING:
A) VERIFY SOURCE IS EXACTLY THE SAME EITHER L1, L2, OR L3 FROM THE SAME TRANSFORMER OR
B) CHECK WITH SCOPE OR PHASE METER
C) IF IN DOUBT USE RELAY
2. IF ISOLATING RELAY IS NOT USED, CONNECT FURNACE "W" TERMINALS TOGETHER.

**Figure 39**

## Gas Piping Checks

Before placing unit in operation, leak test the unit and gas connections.

Check for leaks using an approved chloride-free soap and water solution, an electronic combustible gas detector, or other approved testing methods.

**NOTE:** Never exceed specified pressures for testing. Higher pressure may damage the gas valve and cause subsequent overfiring, resulting in heat exchanger failure.

Disconnect this unit and shutoff valve from the gas supply piping system before pressure testing the supply piping system with pressures in excess of 1/2 psig (3.48 kPa).

Isolate this unit from the gas supply piping system by closing its external manual gas shutoff valve before pressure testing supply piping system with test pressures equal to or less than 1/2 psig (3.48 kPA).

**WARNING**

**To avoid the possibility of explosion or fire, never use a match or open flame to test for leaks.**

**WARNING**

**If the gas furnace is installed in a basement, an excavated area or confined space, it is strongly recommended to contact a propane supplier to install a gas detecting warning device in case of a gas leak.**

- **Since propane gas is heavier than air, any leaking gas can settle in any low areas or confined spaces.**
- **Propane gas odorant may fade, making the gas undetectable except with a warning device.**

## Propane Gas Tanks and Piping

A gas detecting warning system is the only reliable way to detect a propane gas leak. Rust can reduce the level of odorant in propane gas. Do not rely on your sense of smell. Contact a local propane gas supplier about installing a gas detecting warning system. If the presence of gas is suspected, follow the instructions listed in the *Safety Considerations* section of this manual.

All propane gas equipment must conform to the safety standards of the National Board of Fire Underwriters, NBFU Manual 58.

CANADA: National Standard of Canada, Natural Gas and Propane Installation Code (NSCNGPIC) CSA B149.1-15.

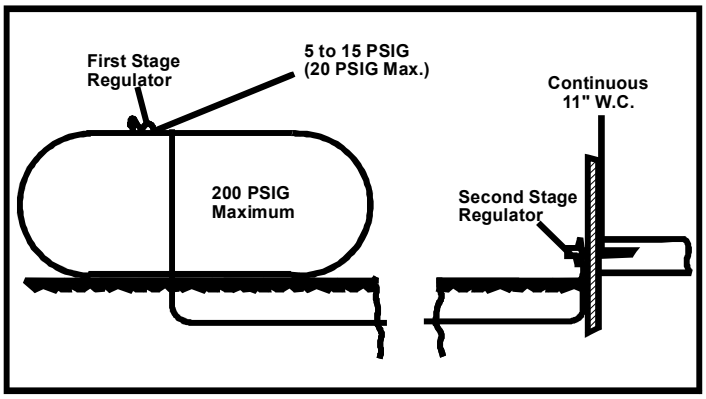


Propane Gas Installation (Typ.)
Figure 40

For satisfactory operation, propane gas pressure must be 10" WC at the furnace manifold with all gas appliances in operation. Maintaining proper gas pressure depends on three main factors:

1. Vaporization rate, depending on temperature of the liquid, and "wetted surface" area of the container or containers.
2. Proper pressure regulation. (Two-stage regulation is recommended for both cost and efficiency).
3. Pressure drop in lines between regulators, and between second stage regulator and the appliance. Pipe size will depend on length of pipe run and total load of all appliances.

Complete information regarding tank sizing for vaporization, recommended regulator settings, and pipe sizing is available from most regulator manufacturers and propane gas suppliers.

Since propane gas will quickly dissolve white lead and most standard commercial compounds, special pipe dope must be used. Always use a pipe thread sealant approved for all gases.

Refer to the illustration for typical propane gas installations and piping.

**⚠ WARNING**

**NEVER ALLOW THE PRODUCTS OF COMBUSTION, INCLUDING CARBON MONOXIDE, TO ENTER THE RETURN DUCT WORK OR CIRCULATION AIR SUPPLY.**

## *CIRCULATING AIR & FILTERS*

### DUCT WORK - AIR FLOW

Duct systems and register sizes must be properly designed for the CFM and external static pressure rating of the furnace. Design the ductwork in accordance with the recommended methods of "Air Conditioning Contractors of America" Manual D.

Install the duct system in accordance with Standards of the National Board of Fire Underwriters for the Installation of Air Conditioning, Warm Air Heating and Ventilating Systems. Pamphlets No. 90A and 90B.

A closed return duct system must be used, with the return duct connected to the furnace. **NOTE:** Ductwork must never be attached to the back of the furnace. For upflow installations requiring 1800 CFM or more, use either two side returns or bottom return or a combination of side / bottom. Flexible joints may be used for supply and return connections to reduce noise transmission. To prevent the blower from interfering with combustion air or draft when a central return is used, a connecting duct must be installed between the unit and the utility room wall. Never use a room, closet, or alcove as a return air chamber.

### CHECKING DUCT STATIC

Refer to your furnace rating plate for the maximum ESP (external duct static) rating.

Total external static refers to everything external to the furnace cabinet. Cooling coils, filters, ducts, grilles, registers must all be considered when reading your total external static pressure. The supply duct pressure must be read between the furnace and the cooling coil. This reading is usually taken by removing the "A" shaped block off plate from the end on the coil; drilling a test hole in it and reinstalling the block off plate. Take a duct static reading at the test hole. Tape up the test hole after your test is complete. The negative pressure must be read between the filter and the furnace blower.

Too much external static pressure will result in insufficient air that can cause excessive temperature rise. This can cause limit switch tripping and heat exchanger failure.

To determine total external duct static pressure, proceed as follows;

1. With clean filters in the furnace, use a draft gauge (inclined manometer) to measure the static pressure of the return duct at the inlet of the furnace. (Negative Pressure)
2. Measure the static pressure of the supply duct. (Positive Pressure)
3. The difference between the two numbers is .4" w.c.

Example:

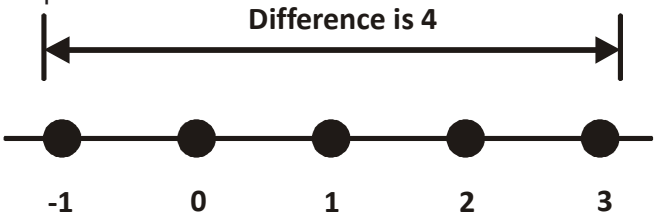


Static reading from return duct = -.1" w.c.

Static reading from supply duct = .3" w.c.

Total external static pressure on this system = .4" w.c.

**NOTE:** Both readings may be taken simultaneously and read directly on the manometer if so desired. If an air conditioner coil or Electronic Air Cleaner is used in conjunction with the furnace, the readings must also include theses components, as shown in the following drawing.

4. Consult proper tables for the quantity of air.

If the total external static pressure exceeds the maximum listed on the furnace rating plate, check for closed dampers, registers, undersized and/or oversized poorly laid out duct work.

The temperature rise of the furnace must be within the temperature rise range listed on the furnace rating plate.

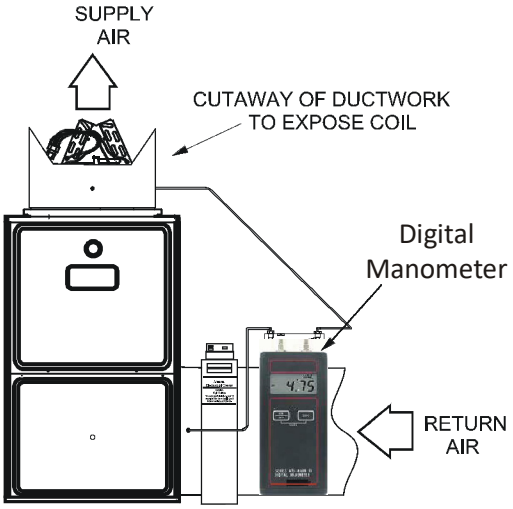


**Checking Static Pressure**
Figure 41

**WARNING**

**EDGES OF SHEET METAL HOLES MAY BE SHARP. USE GLOVES AS A PRECAUTION WHEN REMOVING SHEET METAL FROM RETURN AIR OPENINGS.**

## BOTTOM RETURN AIR OPENING [UPFLOW MODELS]

The bottom return air opening on upflow models utilizes a "lance and cut" method to remove sheet metal from the duct opening in the base pan. To remove, simply press out the lanced sections by hand to expose the metal strips retaining the sheet metal over the duct opening. Using tin snips, cut the metal strips and remove the sheet metal covering the duct opening. In the corners of the opening, cut the sheet metal along the scribe lines to free the duct flanges. Using the scribe line along the duct flange as a guide, unfold the duct flanges around the perimeter of the opening using a pair of seamer pliers or seamer tongs. **NOTE:** Airflow area will be reduced by approximately 18% if duct flanges are not unfolded. This could cause performance issues and noise issues.

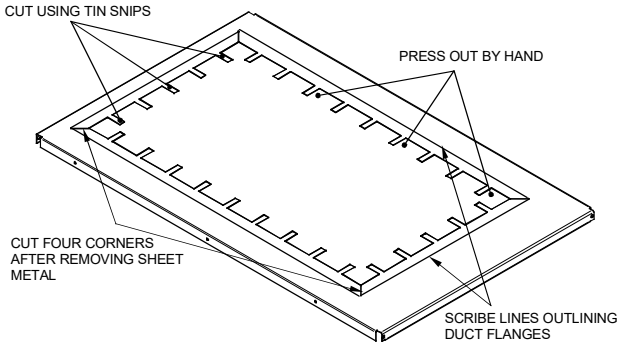


Duct Flange Cut Outs
Figure 42

When the furnace is used in connection with a cooling unit, the furnace should be installed in parallel with or on the upstream side of the cooling unit to avoid condensation in the heating element. With a parallel flow arrangement, the dampers or other means used to control the flow of air must be adequate to prevent chilled air from entering the furnace and, if manually operated, must be equipped with means to prevent operation of either unit unless the damper is in the full heat or cool position.

When the furnace is installed without a cooling coil, it is recommended that a removable access panel be provided in the outlet air duct. This opening shall be accessible when the furnace is installed and shall be of such a size that the heat exchanger can be viewed for visual light inspection or such that a sampling probe can be inserted into the air stream. The access panel must be made to prevent air leaks when the furnace is in operation.

When the furnace is heating, the temperature of the return air entering the furnace must be between 55°F and 100°F.

## FILTERS - READ THIS SECTION BEFORE INSTALLING THE RETURN AIR DUCT WORK

Filters must be used with this furnace. Discuss filter maintenance with the building owner. Filters do not ship with this furnace, but must be provided, sized and installed externally by the installer. Filters must comply with UL900 or CAN/ULCS111 standards. Damage or repairs due to the installation of the furnace without filters is not covered under the warranty.

On upflow units, guide dimples locate the side return cutout locations. Use a straight edge to scribe lines connecting the dimples. Cut out the opening on these lines. **NOTE:** An undersized opening will cause reduced airflow.

Refer to the Filter Sizing Chart to determine filter area requirements.

Filter Sizing Chart

| Model | Minimum Recommended Filter Size^ |
|---|---|
| DM96SE0403AN* | 1-16 X 25 Side or 1-14 X 25 Bottom |
| DM96SE0603BN* | 1-16 X 25 Side or Bottom |
| DM96SE0803BN* | 1-16 X 25 Side or Bottom |
| DM96SE0804CN* | 1-16 X 25 Side or Bottom |
| DM96SE0805CN* | 1-20 X 25 Bottom or 2-16 X 25 Side Return |
| DM96SE1005CN* | 1-20 X 25 Bottom or 2-16 X 25 Side Return |
| DM96SE1205DN* | 1-20 X 25 Bottom or 2-16 X 25 Side Return |
| DC96SE0403BN | 2-10 X 20 or 1 - 16 X 25 Top Return |
| DC96SE0603BN | 2-10 X 20 or 1 - 16 X 25 Top Return |
| DC96SE0804CN | 2-10 X 20 or 1 - 16 X 25 Top Return |
| DC96SE1005CN | 2-14 X 20 or 1 - 20 X 25 Top Return |
| DC96SE1205DN | 2-14 X 20 or 1 - 20 X 25 Top Return |

***Change filters before occupants take ownership of a new home!***

Consider installing an air cleaner with deep-pleated media filter at the time of furnace installation. A deep-pleated filter with a MERV rating of 8 (minimum) will often provide better filtration to protect equipment and the air distribution system than a standard 1" filter and often has lower static pressure loss than a 1" filter. Also a deep-pleated filter will typically require less frequent replacement intervals. Avoid using highly restrictive 1" filters which produce static pressure loss greater than .25" W.C. In some installations the minimum filter size required (consult filter sizing chart above) will not lend itself to a filter installation on the side of the furnace. The installation of a centrally installed air cleaner cabinet or a return duct filter installation may offer more practicality.

Clean Comfort™ brand MERV 11 air cleaners have 5¼" media filters and are available in the following configurations. Consult your distributor for information on our complete line of IAQ Clean Comfort™ products.

Depending on the installation and/or customer preference, differing filter arrangements can be applied. Filters can be installed in the central return register or a side panel external filter rack kit (upflows). As an alternative a media air filter or electronic air cleaner can be used as the requested filter.

The following figures show possible filter locations:

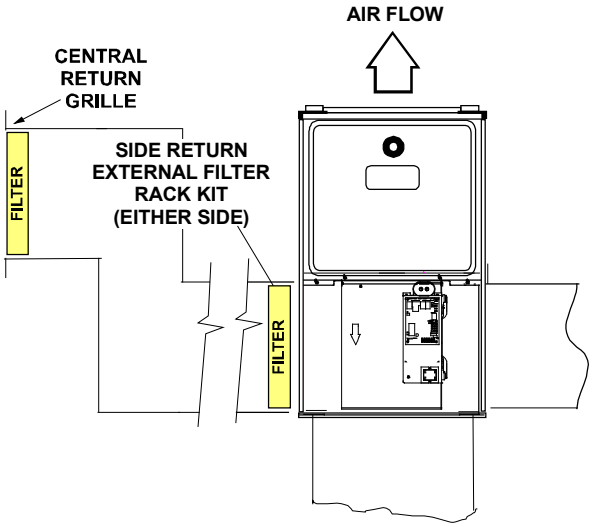


Possible Upright Upflow

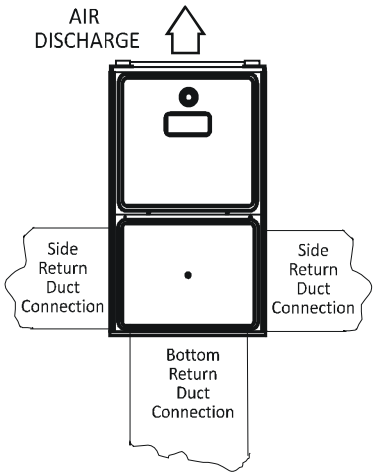


**UPFLOW UPRIGHT**

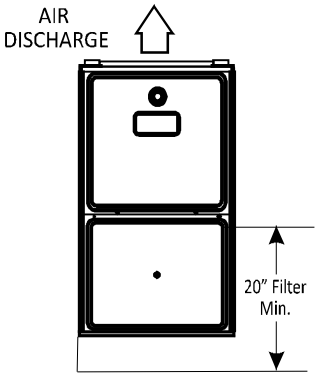


- Either side acceptable
- Side & bottom cut-outs removed
- Height must accommodate 20"
- Nominal filter size minimum

**SIDE/BOTTOM RETURN DUCT OPTION**

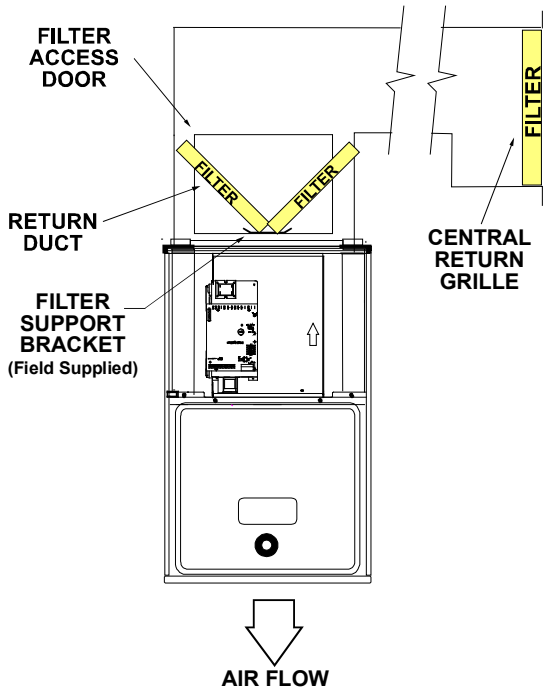


Possible Upright Counterflow Filter Locations

### Horizontal Installations

Filters must be installed in either the central return register or in the return air duct work.

## *Startup Procedure & Adjustment*

Furnace must have a 115 VAC power supply properly connected and grounded. Proper polarity must be maintained for correct operation. In addition to the following start-up and adjustment items, refer to further information in *Operational Checks* section.

### Furnace Cabinet

Check that all furnace cabinet sealing components are in place (plugs, grommets, gaskets). NOTE; If the furnace bottom panel has not been removed for a return duct connection, all perforations must be sealed with duct sealant compound or other suitable method to prevent air leakage. For optimal performance verify that all do gaskets are properly in place and replace as needed to prevent air leakage.

### Drain Trap Priming

The drain trap MUST be primed prior to furnace startup. To prime, fill both sides of the drain trap with water. This ensures proper furnace drainage upon startup and prohibits the possibility of flue gases escaping through the drain system.

### Furnace Operation

Purge gas lines of air prior to startup. Be sure not purge lines into an enclosed burner compartment. Follow NFPA 54, National Fuel Gas Code 8.1 for proper purging methods. In Canada, follow approved purging methods in B149.1-15.

Check for leaks using an approved chloride-free soap and water solution, an electronic combustible gas detector, or other approved method. Verify that all required kits (propane gas, high altitude, etc.) have been appropriately installed.

### Furnace Startup

1. Close the manual gas shutoff valve external to the furnace.
2. Turn off the electrical power to the furnace.
3. Set the room thermostat to the lowest possible setting.
4. Remove the burner compartment door.

**NOTE:** This furnace is equipped with an ignition device which automatically lights the burner. Do not try to light the burner by hand.

**⚠ CAUTION**

**To prevent unreliable operation or equipment damage, the inlet gas supply pressure must be as specified on the unit rating plate with all other household gas fired appliances operating.**

5. Move the furnace gas valve manual control to the OFF position.
6. Wait five minutes then smell for gas. Be sure check near the floor as some types of gas are heavier than air.
7. If you smell gas after five minutes, immediately follow the safety instructions in the *Safety Considerations* on page 3 of this manual. If you do not smell gas after five minutes, move the furnace gas valve manual control to the ON position.
8. Replace the burner compartment door.
9. Open the manual gas shutoff valve external to the furnace.
10. Turn on the electrical power to the furnace.
11. Adjust the thermostat to a setting above room temperature.
12. After the burners are lit, set the thermostat to desired temperature.

### Furnace Shutdown

1. Set the thermostat to the lowest setting.

   The integrated control will close the gas valve and extinguish flame. Following a 15 second delay, the induced draft blower will be de-energized. The indoor blower will shut down when the time delay expires (selectable on 96% models).
2. Remove the burner compartment door and move the furnace gas valve manual control to the OFF position.
3. Close the manual gas shutoff valve external to the furnace.
4. Replace the burner compartment door.

## Gas Supply Pressure Measurement

## Gas Pressure Test

The line pressure supplied to the gas valve must be within the range specified below. The supply pressure can be measured at the gas valve inlet pressure tap or at a hose fitting installed in the gas piping drip leg. The supply pressure must be measured with the burners operating. To measure the gas supply pressure, use the following procedure.

1. Turn OFF gas to furnace at the manual gas shutoff valve external to the furnace.
2. Connect a calibrated water manometer (or appropriate gas pressure gauge) at either the gas valve inlet pressure tap or the gas piping drip leg. See White-Rodgers 36J22 gas valve figure for location of inlet pressure tap.

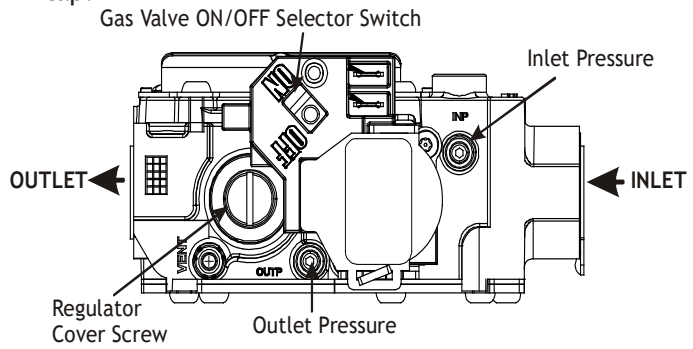


White-Rodgers Model 36J22

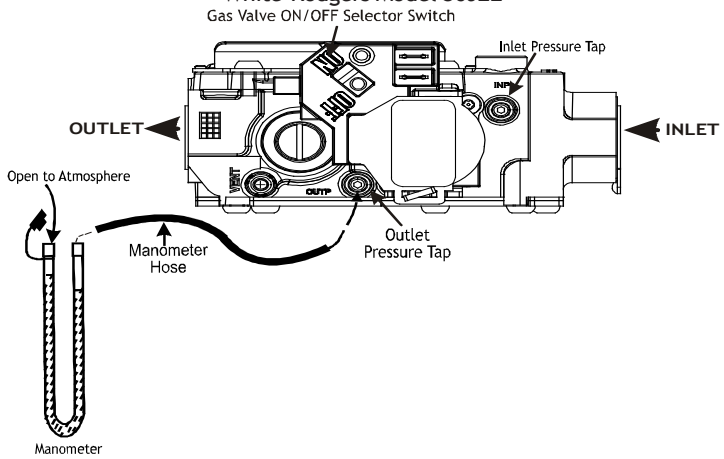


White-Rodgers Model 36J22
Connected to Manometer

**NOTE:** If measuring gas pressure at the drip leg, a field-supplied hose barb fitting must be installed prior to making the hose connection. If using the inlet pressure tap on the White-Rodgers 36J22 gas valve, then use the 36G/J Valve Pressure Check Kit, Part No. 0151K00000S.

3. Turn ON the gas supply and operate the furnace and all other gas consuming appliances on the same gas supply line.
4. Measure furnace gas supply pressure with burners firing. Supply pressure must be within the range specified in the *Inlet Gas Supply Pressure* table.

| Manifold Gas Pressure | | |
|---|---|---|
| Gas | Range | Nominal |
| Natural | 3.2 - 3.8" w.c. | 3.5" w.c. |
| Propane | 9.7 - 10.3" w.c. | 10.0" w.c. |

If supply pressure differs from table, make the necessary adjustments to pressure regulator, gas piping size, etc., and/or consult with local gas utility.

5. Turn OFF gas to furnace at the manual shutoff valve and disconnect manometer. Reinstall plug before turning on gas to furnace.
6. Turn OFF any unnecessary gas appliances stated in step 3.

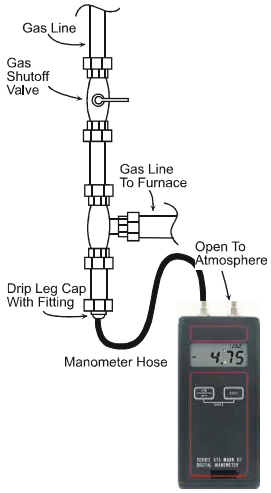


Measuring Inlet Gas Pressure (Alt. Method)
Figure 43

## Gas Manifold Pressure Measurement and Adjustment

Only small variations in gas pressure should be made by adjusting the gas valve pressure regulator. The manifold pressure must be measured with the burners operating. To measure and adjust the manifold pressure, use the following procedure.

1. Turn OFF gas to furnace at the manual gas shutoff valve external to the furnace.
2. Turn off all electrical power to the system.
3. Outlet pressure tap connections:
   White-Rodgers 36J22 valve: Back outlet pressure test screw (inlet/outlet pressure tap) out one turn (counterclockwise, not more than one turn).
4. Attach a hose and manometer to the outlet pressure tap (White-Rodgers valve).
5. Turn ON the gas supply.
6. Turn on power and close thermostat “R” and “W” contacts to provide a call for heat.
7. Measure the gas manifold pressure with burners firing. Adjust manifold pressure using the *Manifold Gas Pressure* table shown on this page.
8. Remove regulator cover screw from the outlet pressure regulator adjust tower and turn screw clockwise to increase pressure or counterclockwise to decrease pressure. Replace regulator cover screw.
9. Turn off all electrical power and gas supply to the system.

10. Remove the manometer hose from the hose barb fitting or outlet pressure tap.
11. Replace outlet pressure tap: White-Rodgers 36J22 valve: Turn outlet pressure test screw in to seal pressure port (clockwise, 7 in-lb minimum).
12. Turn on electrical power and gas supply to the system.
13. Close thermostat contacts "R" and "W" to energize the valve.

Using a leak detection solution or soap suds, check for leaks at outlet or screw (White-Rodgers valve). Bubbles forming indicate a leak. SHUT OFF GAS AND REPAIR ALL LEAKS IMMEDIATELY!

**NOTE:** For gas to gas conversion, consult your dealer for appropriate conversion.

**CAUTION**

**TO PREVENT UNRELIABLE OPERATION OR EQUIPMENT DAMAGE, THE INLET GAS SUPPLY PRESSURE MUST BE AS SPECIFIED ON THE UNIT RATING PLATE WITH ALL OTHER HOUSEHOLD GAS FIRED APPLIANCES OPERATING.**

## GAS INPUT RATE MEASUREMENT (NATURAL GAS ONLY)

The actual gas input rate to the furnace must never be greater than that specified on the unit rating plate. To measure natural gas input using the gas meter, use the following procedure.

1. Turn OFF the gas supply to all other gas-burning appliances except the furnace.
2. While the furnace is operating at high fire rate, time and record one complete revolution of the gas meter dial, measuring the smallest quantity, usually the dial that indicates 1/2 cu. ft. per revolution. You will use this number to calculate the quantity of gas in cubic ft. if the furnace would consume if it ran steadily for one hour (3600 seconds).
3. If the 1/2 cu. ft. dial was used, multiply your number x 2.

   EXAMPLE: If it took 23 seconds to complete one revolution of the 1/2 ft. dial (23 x 2 = 46).

This tells us that at this rate, it would take 46 seconds to consume one cu. ft. of gas. 3600 / 46 = 78.

This tells us that in one hour, the furnace would consume 78 cu. ft. of gas.

The typical value range for 1 cu. ft. of natural gas is around 1000 BTU. Check with your gas utility, if possible. In this example, the furnace is consuming 78,000 BTUH.

**NOTE:** The final manifold pressure cannot vary by more than ± 0.3" w.c. for Natural and ± 0.5" for LP from the specified setting. Consult your local gas supplier if additional input rate adjustment is required.

4. Turn ON gas to and relight all other appliances turned off in step 1. Be certain that all appliances are functioning properly and that all pilot burners are operating.

## TEMPERATURE RISE

Temperature rise must be within the range specified on the unit rating plate. An incorrect temperature rise may result in condensing in or overheating of the heat exchanger. An airflow and temperature rise table is provided in the Specification Sheet applicable to your model. Determine and adjust temperature rise as follows:

1. Operate furnace with burners firing for approximately ten minutes. Ensure all registers are open and all duct dampers are in their final (fully or partially open) position.
2. Place thermometers in the return and supply ducts as close to the furnace as possible. Thermometers must not be influenced by radiant heat by being able to "see" the heat exchanger.
3. Subtract the return air temperature from the supply air temperature to determine the air temperature rise. Allow adequate time for thermometer readings to stabilize.
4. Adjust temperature rise by adjusting the circulator blower speed. Increase blower speed to reduce temperature rise. Decrease blower speed to increase temperature rise. Refer to *Startup Procedure and Adjustment -Circulator Blower Speeds* for speed changing details.

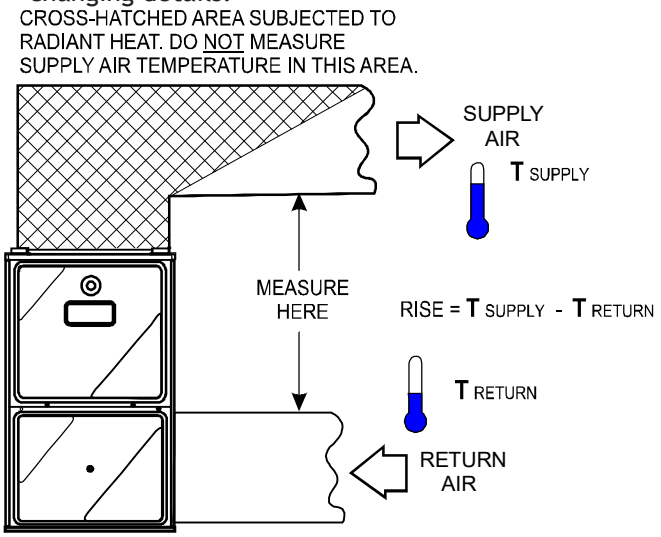


Temperature Rise Measurement
Figure 44

## CIRCULATOR BLOWER SPEEDS

This furnace is equipped with a multi-speed circulator blower. This blower provides ease in adjusting blower speeds. The Specification Sheet applicable to your model provides an airflow table, showing the relationship between airflow (CFM) and external static pressure (E.S.P.), for the proper selection of heating and cooling speeds.

**WARNING**

**TO AVOID PERSONAL INJURY OR DEATH DUE TO ELECTRICAL SHOCK, TURN OFF POWER TO THE FURNACE BEFORE CHANGING SPEED TAPS.**

1. Determine the tonnage of the cooling system installed with the furnace. If the cooling capacity is in BTU/hr divide it by 12,000 to convert capacity to tons.
   **Example:** Cooling Capacity of 30,000 BTU/hr.
   30,000/12,000 = 2.5 Tons
2. Determine the proper air flow for the cooling system. Most cooling systems are designed to work with air volume between 350 and 450 CFM per ton. Most manufacturers recommend an air flow of about 400 CFM per ton.

   **Example:** 2.5 tons X 400 CFM per ton = 1000 CFM
3. Select the heating speed for your model from the heating speed chart in the Specification Sheet. The selected speed must provide a temperature rise within the rise range listed with the particular model.

To adjust the circulator blower speed, proceed as follows:

1. Motor speed Tap wiring must remain in factory position on the control board and motor.
2. There are 4 speed Tap wires to the motor T1, T2, T3, T4.
3. There are 5 speeds available, depending on DIP switch settings and found in air flow table for each size furnace.
4. Cooling Speed can be adjusted by adjusting S1-1, S1-2, S1-3 (see cooling airflow Chart for reference).
5. Heating Speed can be adjusted by adjusting S2-1 , S2-2 (see heating airflow Chart).
6. Circulation / Continuous Fan speed can be adjusted by adjusting S2-3 , S2-4 (see Circulation airflow Chart)
7. Verify proper temperature rise as outlined in the *Temperature Rise* section of *Startup Procedure and Adjustment*.

## Motor Tap Identification

| CONNECTOR ID | DESCRIPTION | CONNECTOR VOLTAGE |
|---|---|---|
| L | LINE, L1 | LINE, L1 |
| G | GROUND | CHASSIS GROUND |
| N | LINE, L2 | LINE, L2 |
| C | SIGNAL COMMON | 24VAC COMMON |
| 1 | TAP 1 | 24VAC |
| 2 | TAP 2 | 24VAC |
| 3 | TAP 3 | 24VAC |
| 4 | TAP 4 | 24VAC |
| 5 | TAP 5 | 24VAC |

**Heat Off Delay (S1-4)**

| S1-4 | Min | Nom | Max | Units |
|---|---|---|---|---|
| ON | | *150 | | Seconds |
| OFF | | 100 | | Seconds |

* = DEFAULT SETTING

**HEAT MOTOR SPEED DIP SWITCH SETTING (S2-1, S2-2)**

| | | 1 2 | *1 2 | 1 2 | 1 2 |
|---|---|---|---|---|---|
| | Position | OFF OFF | ON OFF | ON ON | OFF ON |
| Motor Speed **HEAT** | W | T1 | T2 | T3 | T4 |

* = DEFAULT SETTING

**FAN MOTOR SPEED DIP SWITCH SETTING (S2-3, S2-4)**

| | | *3 4 | 3 4 | 3 4 | 3 4 |
|---|---|---|---|---|---|
| | Position | OFF OFF | ON OFF | OFF ON | ON ON |
| Motor Speed **FAN** | G | T1 | T2 | T4 | T1+T2 |

* = DEFAULT SETTING

**COOL MOTOR SPEED DIP SWITCH SETTING (S1-1, S1-2, S1-3)**

| | | 1 2 3 | 1 2 3 | 1 2 3 | 1 2 3 | *1 2 3 | 1 2 3 | 1 2 3 | 1 2 3 |
|---|---|---|---|---|---|---|---|---|---|
| | Position | OFF OFF OFF | ON OFF OFF | ON ON OFF | OFF ON OFF | OFF OFF ON | OFF ON ON | ON OFF ON | ON ON ON |
| Motor Speed COOL | Y | T1 | T2 | T3 | T4 | T1+T2 | T1 | T1 | T1 |

* = DEFAULT SETTING

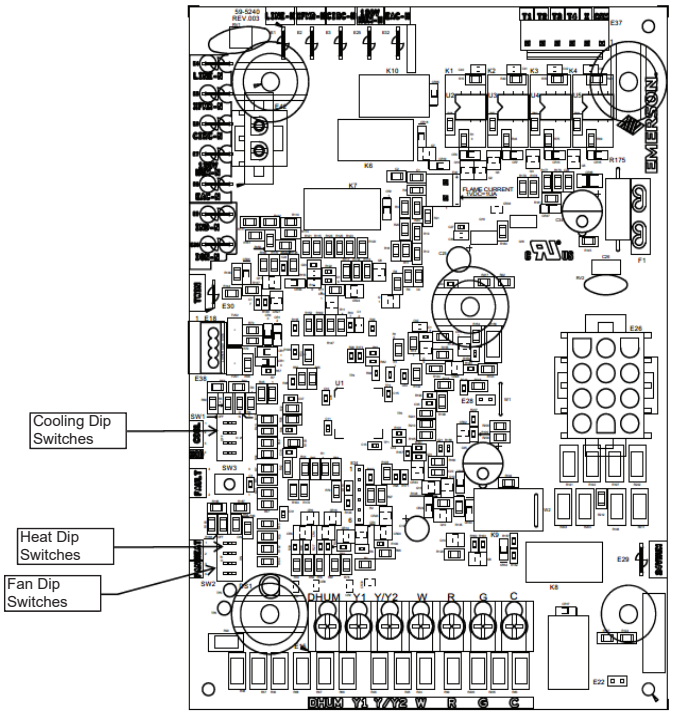


In general lower heating speeds will: reduce electrical consumption, lower operating sound levels of the blower, and increase the outlet air temperature delivered to the home. The speeds available allow the blower performance to be optimized for the particular homeowner's needs.

### Blower Heat Off Delay Timings

This integrated control module offers selectable heat off delay function. The heat delay may be set to 100 or 150 seconds by adjusting DIP Switch S1-4 on the Control Module. The delay is factory shipped at 150 seconds but may be changed to suit the installation requirements and/or homeowner preference.

## *Normal Sequence of Operation*

### Power Up

The normal power up sequence is as follows:

- 115 VAC power applied to furnace.
- Integrated control module performs internal checks.
- LED will flash once at power up then remain on.
- Integrated control module monitors safety circuits continuously.
- Furnace awaits call from thermostat.

### Heating Mode

The normal operational sequence in heating mode is as follows:

- R and W thermostat contacts close, initiating a call for heat.
- Integrated control module performs safety circuit checks
- Induced draft blower is energized for a 15-second prepurge.
- Igniter warn up begins upon presence of closed pressure switch contacts.
- Gas valve opens at end of igniter warm up period, delivering gas to burners and establishing flame.
- Integrated control module monitors flame presence. Gas valve will remain open only if flame is detected.
- Circulator blower is energized on heat speed following a thirty (30) second blower on delay.
- Furnace runs, integrated control module monitors safety circuits continuously.
- R and W thermostat contacts open, completing the call for heat.
- Gas valve closes, extinguishing flame.
- Induced draft blower is de-energized following a fifteen second post purge.
- 96% models HUM terminal is de-energized.
- **For 96% Models:** Circulator blower continues running for the selected heat off delay period  Factory set at 150 seconds.
- EAC terminal is de-energized
- Furnace awaits next call from thermostat.

### Cooling Mode

The normal operational sequence in cooling mode is as follows:

- R,Y, G thermostat contacts close, initiating a call for cool.
- Integrated control module performs safety circuit checks.
- Outdoor fan and compressor are energized.
- Circulator blower is energized on the cool speed.
- 96% models 115 VAC EAC terminal is energized.
- Furnace circulator blower and outdoor cooling unit run their appropriate speeds, integrated control module monitors safety circuits continuously.
- R,Y, G thermostat contacts open, completing the call for cool.
- Outdoor fan and compressor are de-energized.
- Circulator blower continues running during a cool off delay period of 65 seconds.
- Furnace awaits next call from thermostat.

### Fan Only Mode

The normal operational sequence in fan only mode is as follows:

- R and G thermostat contacts close, initiating a call for fan.
- Integrated control module performs safety circuit checks.
- Circulator blower is energized on heat speed.
- 96% models 115 VAC EAC terminal is energized.
- Circulator blower runs, integrated control module monitors safety circuits continuously.
- R and G thermostat contacts open, completing the call for fan.
- Circulator blower is de-energized.
- EAC terminal is de-energized.
- Furnace awaits next call from thermostat.

## *Operational Checks*

The burner flames should be inspected with the burner compartment door installed.  Flames should be stable, quiet, soft, and blue (dust may cause orange tips but they must not be yellow).  Flames should extend directly outward from the burners without curling, floating, or lifting off.  Flames must not impinge on the sides of the heat exchanger firing tubes.

## *Safety Circuit Description*

A number of safety circuits are employed to ensure safe and proper furnace operation. These circuits serve to control any potential safety hazards and serve as inputs in the monitoring and diagnosis of abnormal function. These circuits are continuously monitored during furnace operation by the integrated control module.

### Integrated Control Module

The integrated control module is an electronic device which, if a potential safety concern is detected, will take the necessary precautions and provide diagnostic information through an LED.

### Primary Limit

The primary limit control is located on the partition panel and monitors heat exchanger compartment temperatures. It is a normally-closed (electrically), automatic reset, temperature-activated sensor. The limit guards against overheating as a result of insufficient conditioned air passing over the heat exchanger.

### Auxiliary Limit

The auxiliary limit controls are located on or near the circulator blower and monitors blower compartment temperatures. They are a normally-closed (electrically), manual-reset sensors. These limits guard against overheating as a result of insufficient conditioned air passing over the heat exchanger.

### Rollout Limit

The rollout limit controls are mounted on the burner/manifold assembly and monitor the burner flame. They are normally-closed (electrically), manual-reset sensors. These limits guard against burner flames not being properly drawn into the heat exchanger.

### Pressure Switches

The pressure switches are normally-open (closed during operation) negative air pressure-activated switches. They monitor the airflow (combustion air and flue products) through the heat exchanger via pressure taps located on the induced draft blower and the coil front cover. These switches guard against insufficient airflow (combustion air and flue products) through the heat exchanger and/or blocked condensate drain conditions.

### Flame Sensor

The flame sensor is a probe mounted to the burner/manifold assembly which uses the principle of flame rectification to determine the presence or absence of flame.

## *Troubleshooting*

### Electrostatic Discharge (ESD) Precautions

**NOTE:** Discharge body's static electricity before touching unit. An electrostatic discharge can adversely affect electrical components.

Use the following precautions during furnace installation and servicing to protect the integrated control module from damage. By putting the furnace, the control, and the person at the same electrostatic potential, these steps will help avoid exposing the integrated control module to electrostatic discharge. This procedure is applicable to both installed and uninstalled (ungrounded) furnaces.

1. Disconnect all power to the furnace. Do not touch the integrated control module or any wire connected to the control prior to discharging your body's electrostatic charge to ground.
2. Firmly touch a clean, unpainted, metal surface of the furnace away from the control. Any tools held in a person's hand during grounding will be discharged.
3. Service integrated control module or connecting wiring following the discharge process in step 2. Use caution not to recharge your body with static electricity; (i.e., do not move or shuffle your feet, do not touch ungrounded objects, etc.). If you come in contact with an ungrounded object, repeat step 2 before touching control or wires.
4. Discharge your body to ground before removing a new control from its container. Follow steps 1 through 3 if installing the control on a furnace. Return any old or new controls to their containers before touching any ungrounded object.

### Diagnostic Chart

Refer to the *Diagnostic Codes chart* for assistance in determining the source of unit operational problems.

| ERROR CODE | |
|---|---|
| **Red LED Flash** | **Error / Condition** |
| **Flash Codes stored in memory (auto-erased after 14 days)** | |
| 1 | System Lockout (Retries Exceeded) |
| 2 | Pressure Switch stuck Closed |
| 3 | Pressure Switch stuck Open |
| 4 | Open Main or Auxillary Temperature Limit Switch |
| 5 | Flame Sensed>4.25 Seconds with Gas Valve De-Energized |
| 6 | Open Rollout Temperature Limit Switch |
| 8 | Igniter Relay Fault |
| 10 | Open Fuse |
| 11 | Igniter Open |
| 12 | Inducer Relay Error/Improper Grounding |
| **Flash Codes NOT stored in memory** | |
| 7 | Low Flame Sense Signal |
| 9 | Twinning Fault |
| OFF | Control Failure / No Power / Internal Fault / IRQ Loss. Gas Heating Lockout (Gas valve energized when it should be de-energized) Or Gas Valve De-energized when it should be Energized |
| Rapid Flash | Reverse Polarity |
| Continuous On | Normal Operation |

### Fault Code Retrieval

Fault recall shall be via momentary push button switch when held depressed for 2–5 seconds while control is in standby mode. The control shall flash the last five status codes that have occurred. The control will flash the most recent error first and the oldest error last (last in first out). There shall be 2 seconds between codes.

### Fault Code Reset

The last five fault codes can be erased from memory by depressing the fault recall switch for 5–10 seconds. At 5 seconds the LED will be rapid flashed (100 mS on, 100 mS off) to indicate that the switch should be released to erase the fault codes. Once the switch is released the rapid flash will stop and the fault codes will be erased. The control shall acknowledge the reset of the fault codes by turning off the LED for 2 seconds after the switch is released. The LED status will then return to the normal mode.

**WARNING**

**HIGH VOLTAGE !**

**TO AVOID PERSONAL INJURY OR DEATH DUE TO ELECTRICAL SHOCK, DISCONNECT ELECTRICAL POWER BEFORE PERFORMING ANY SERVICE OR MAINTENANCE.**

### RESETTING FROM LOCKOUT

Furnace lockout results when a furnace is unable to achieve ignition after three attempts during a single call for heat. It is characterized by a non-functioning furnace and a fault code displayed. If the furnace is in "lockout", it will (or can be) reset in any of the following ways.

1. Automatic reset. The integrated control module will automatically reset itself and attempt to resume normal operations following a one hour lockout period.
2. Manual power interruption. Interrupt 115 volt power to the furnace.
3. Manual thermostat cycle. Lower the thermostat so that there is no longer a call for heat for 1 -20 seconds then reset to previous setting.

**NOTE:** If the condition which originally caused the lockout still exists, the control will return to lockout. Refer to the *Troubleshooting Chart* for aid in determining the cause.

## *MAINTENANCE*

### ANNUAL INSPECTION

The furnace should be inspected by a qualified installer, or service agency at least once per year. This check should be performed at the beginning of the heating season. This will ensure that all furnace components are in proper working order and that the heating system functions appropriately. Pay particular attention to the following items. Repair or service as necessary.

- Flue pipe system. Check for blockage and/or leakage. Check the outside termination and the connections at and internal to the furnace.
- Heat exchanger. Check for corrosion and/or buildup within the heat exchanger passageways.
- Burners. Check for proper ignition, burner flame, and flame sense.
- Drainage system. Check for blockage and/or leakage. Check hose connections at and internal to furnace.
- Wiring. Check electrical connections for tightness and/ or corrosion. Check wires for damage.
- Filters.

### FILTERS

### FILTER MAINTENANCE

Improper filter maintenance is the most common cause of inadequate heating or cooling performance. Filters should be cleaned (permanent) or replaced (disposable) every two months or as required. When replacing a filter, it must be replaced with a filter of the same type and size.

### FILTER REMOVAL

Depending on the installation, differing filter arrangements can be applied. Filters can be installed in either the central return register or a side panel external filter rack (upflow only). A media air filter or electronic air cleaner can be used as an alternate filter. Follow the filter sizes given in the Recommended Minimum Filter size table to ensure proper unit performance.

To remove filters from an external filter rack in an upright upflow installation, follow the directions provided with external filter rack kit.

### *HORIZONTAL UNIT FILTER REMOVAL*

Filters in horizontal installations are located in the central return register or the ductwork near the furnace.

To remove:

1. Turn OFF electrical power to furnace.
2. Remove filter(s) from the central return register or ductwork.
3. Replace filter(s) by reversing the procedure for removal.
4. Turn ON electrical power to furnace.

### *MEDIA AIR FILTER OR ELECTRONIC AIR CLEANER REMOVAL*

Follow the manufacturer's directions for service.

### BURNERS

Visually inspect the burner flames periodically during the heating season. Turn on the furnace at the thermostat and allow several minutes for flames to stabilize, since any dislodged dust will alter the flames normal appearance. Flames should be stable, quiet, soft, and blue (dust may cause orange tips but they must not be yellow). They should extend directly outward from the burners without curling, floating, or lifting off. Flames must not impinge on the sides of the heat exchanger firing tubes.

### INDUCED DRAFT AND CIRCULATOR BLOWERS

The bearings in the induced draft blower and circulator blower motors are permanently lubricated by the manufacturer. No further lubrication is required. Check motor windings for accumulation of dust which may cause overheating. Clean as necessary.

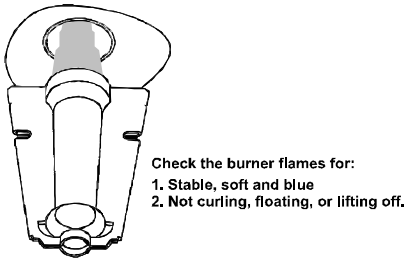


**Burner Flame**
**Figure 45**

### Condensate Trap and Drain System (Qualified Servicer Only)

Annually inspect the drain tubes, drain trap, and field-supplied drain line for proper condensate drainage. Check drain system for hose connection tightness, blockage, and leaks. Clean or repair as necessary.

### Flame Sensor (Qualified Servicer Only)

Under some conditions, the fuel or air supply can create a nearly invisible coating on the flame sensor. This coating acts as an insulator causing a drop in the flame sense signal. If the flame sense signal drops too low the furnace will not sense flame and will lock out. The flame sensor should be carefully cleaned by a qualified servicer using emery cloth or steel wool. Following cleaning, the flame sense signal should be as indicated in the Specifications Sheet.

### Flue Passages (Qualified Servicer Only)

The heat exchanger flue passageways should be inspected at the beginning of each heating season.

## *Before Leaving an Installation*

- Cycle the furnace with the thermostat at least three times. Verify cooling and fan only operation.
- Review the Owner's Manual with the homeowner and discuss proper furnace operation and maintenance.
- Leave literature packet near furnace.

## *Repair and Replacement Parts*

- When ordering any of the listed functional parts, be sure to provide the furnace model, manufacturing, and serial numbers with the order.
- Although only functional parts are shown in the parts list, all sheet metal parts, doors, etc. may be ordered by description.
- Parts are available from your distributor.

**Functional Parts List-**

| | |
|---|---|
| Gas Valve | Blower Motor |
| Gas Manifold | Blower Wheel |
| Natural Gas Orifice | Blower Mounting Bracket |
| Propane Gas Orifice | Blower Cutoff |
| Igniter | Blower Housing |
| Flame Sensor | Pressure Switch |
| Rollout Limit Switch | Door Switch |
| Primary Limit Switch | Auxiliary Limit Switch |
| Coil Front Cover | Integrated Control Module |
| Transformer | Door Switch |
| Induced Draft Blower | |
| Heat Exchanger with Recuperator Coil | |

# TROUBLESHOOTING CHART PCBBF145

| Symptoms of Abnormal Operation | Associated LED Code[2] | Fault Description(s) | Possible Causes | Corrective Action | Cautions and Notes |
|---|---|---|---|---|---|
| • Furnace fails to operate.<br>• Integrated control module diagnostic **LED** provides **no signal**. | OFF | • No 115 volt power to furnace, or no 24 volt power to integrated control module.<br>• Blown fuse or circuit breaker.<br>•Integrated control module has an internal fault. | • Manual disconnect switch OFF, door switch open, or 24 volt wires improperly connected or loose.<br>• Blown fuse or circuit breaker.<br>• Integrated control module has an internal fault. | • Assure 115 and 24 volt power to furnace integrated control module.<br>• Check integrated control module fuse (3A). Replace if necessary.<br>• Check for possible shorts in 115 and 24 volt circuits. Repair as necessary.<br>• Replace bad integrated control module. | • Turn power OFF prior to repair.<br>• Replace integrated control module fuse with 3A automotive fuse.<br>• Read precautions in "Electrostatic Discharge" section of manual. |
| • LED is Steady On. | ON<br>CONTINUOUS ON | • Normal Operation | • Normal Operation | • None | • Normal Operation |
| • Furnace fails to operate.<br>• Integrated control module diagnostic **LED** is flashing **ONE** (1) flash. | 1<br>1 FLASH | • Furnace lockout due to an excessive number of ignition "retries" (3 total)[1]. | • Failure to establish flame. Cause may be no gas to burners, front cover pressure switch stuck open, bad igniter or igniter alignment, improper orifices, coated/oxidized or improperly connected flame sensor.<br>• Loss of flame after establishment. Cause may be interrupted gas supply, lazy burner flames (improper gas pressure or restriction in flue and/or combustion air piping), front cover pressure switch opening, improper induced draft blower performance. | • Locate and correct gas interruption.<br>• Check front cover pressure switch operation (hose, wiring, contact operation). Correct if necessary.<br>• Replace or realign igniter.<br>• Check flame sense signal. Sand sensor if coated and/or oxidized.<br>• Check flue piping for blockage, proper length, elbows, and termination.<br>• Verify proper induced draft blower performance. | • Turn power OFF prior to repair.<br>• Igniter is fragile, handle with care.<br>• Sand flame sensor with emery cloth.<br>• See "Vent/ Flue Pipe" section for piping details. |
| • Furnace fails to operate.<br>• Integrated control module diagnostic **LED** is flashing **TWO** (2) flashes. | 2<br>2 FLASHES | • Pressure switch circuit is closed.<br>• Induced draft blower **is not** operating. | • Induced draft blower pressure switch contacts sticking.<br>• Shorts in pressure switch circuit. | • Replace induced draft blower pressure switch.<br>• Repair short. | • Turn power OFF prior to repair.<br>• Replace pressure switch with proper replacement part. |
| • Induced draft blower runs continuously with no further furnace operation.<br>• Integrated control module diagnostic **LED** is flashing **THREE** (3) flashes. | 3<br>3 FLASHES | • Pressure switch circuit not closed.<br>• Induced draft blower **is** operating. | • Pressure switch hose blocked, pinched or connected improperly.<br>• Blocked flue and/or inlet air pipe, blocked drain system, or weak induced draft blower.<br>• Incorrect pressure switch setpoint or malfunctioning switch contacts.<br>• Loose or improperly connected wiring. | • Inspect pressure switch hose. Repair, if necessary.<br>•Inspect flue and/or inlet air piping for blockage, proper length, elbows, and termination. Check drain system. Correct as necessary.<br>• Correct pressure switch setpoint or contact motion.<br>• Tighten or correct wiring connection. | • Turn power OFF prior to repair.<br>• Replace pressure switch with proper replacement part. |

[1]Integrated control module will automatically attempt to reset from lockout after one hour.
[2]LED Flash code will cease if power to the control module is interrupted through the disconnect or door switch.

## *TROUBLESHOOTING CHART*

| | | | | | |
|---|---|---|---|---|---|
| • Circulator blower runs continuously. No furnace operation.<br>• Integrated control module diagnostic **LED** is flashing **FOUR** (4) flashes. | 4<br>4 FLASHES | • Primary or auxiliary limit circuit is open. | • Faulty primary or auxiliary limit switch.<br>• Insufficient conditioned air over the heat exchanger. Blocked filters, restrictive ductwork, improper circulator blower speed, or failed circulator blower.<br>• Loose or improperly connected wiring. | • Check primary/ auxiliary limit. Replace if necessary.<br>• Check filters and ductwork for blockage. Clean filters or remove obstruction.<br>• Check circulator blower speed and performance. Correct speed or replace blower if necessary.<br>• Tighten or correct | • Turn power OFF prior to repair.<br>• Replace primary/ auxiliary limit with proper replacement part.<br>• Replace blower with correct replacement part. |
| • Induced draft blower and circulation blower runs continuously. No furnace operation.<br>• Integrated control module diagnostic **LED** is flashing **FIVE** (5) flashes. | 5<br>5 FLASHES | • Flame sensed with no call for heat. | • Short to ground in flame sense circuit. | • Correct short at flame sensor or in flame sensor wiring. | • Turn power OFF prior to repair. |
| • Furnace fails to operate.<br>• Integrated control module diagnostic **LED** is flashing **SIX** (6) flashes.<br>• No furnace operation. | 6<br>6 FLASHES | • Rollout limit open.<br>• Integrated control module fuse is blown. | • Flame rollout.<br>• Misaligned burners, blocked flue and/or air inlet pipe, or failed induced draft blower.<br>• Loose or improperly connected wiring.<br>• Short in 24 volt AC control circuits or safety circuits.<br>• Faulty rollout limit. | • Check burners for proper alignment.<br>• Check flue and air inlet piping for blockage, proper length, elbows, and termination. Correct as necessary.<br>• Check rollout limit. Replace if necessary.<br>• Check induced draft blower for proper performance. Replace, if necessary.<br>• Tighten or correct wiring connection. | • Turn power OFF prior to repair.<br>• See "Vent/Flue Pipe" section for piping details.<br>• Replace induced draft blower with correct replacement part.<br>• Replace integrated control module fuse with 3A automotive fuse.<br>• Read precautions in "Electrostatic Discharge" section of manual.<br>• Replace rollout limit with correct replacement part. |
| • Normal furnace operation.<br>• Integrated control module diagnostic **LED** is flashing **SEVEN** (7) flashes. | 7<br>7 FLASHES | • Flame sense microamp signal is low. | • Flame sensor is coated/oxidized.<br>• Flame sensor incorrectly positioned in burner flame.<br>• Lazy burner flame due to improper gas pressure or combustion air. | • Sand flame sensor.<br>• Inspect for proper sensor alignment.<br>• Compare current gas pressure to rating plate info. Adjust as needed. | • Turn power OFF prior to repair.<br>• Clean flame sensor with steel wool.<br>• See "Vent/Flue Pipe" section for piping details.<br>• See rating plate for proper gas pressure. |
| • Furnace not operating.<br>• Integrated control module diagnostic **LED** is flashing **EIGHT** (8) flashes. | 8<br>8 FLASHES | • Igniter Relay Fault | • Improperly connected igniter.<br>• Bad igniter.<br>• Poor unit ground.<br>• Poor burner ground.<br>• Faulty integrated control module. | • Check and correct wiring from integrated control module to igniter.<br>• Replace bad igniter.<br>• Check & correct unit ground wire.<br>• Replace bad integrated control module. | • Turn power OFF prior to repair.<br>• Replace igniter w/proper replacement part.<br>• Read precautions in "Electrostatic Discharge" section of manual. |

## *TROUBLESHOOTING CHART*

| Symptoms of Abnormal Operation | Associated LED Code[2] | Fault Description(s) | Possible Causes | Corrective Action | Cautions and Notes |
|---|---|---|---|---|---|
| • Circulating blowers not operating simultaneously. No blower operation. | 9<br>9 FLASHES | •Twinning Fault | • Furnace twin terminals not connected together by field wiring.<br>• Isolating relay not used or improperly installed | • Install field wiring connecting twin terminals, check continuity of wiring.<br>• Verify each furnace fan motor is operable without twinning connection.<br>• Wire per twinning diagram in this installation manual | • Verify line voltage supply is turned off before proceeding with corrections |
| • Furnace not operating.<br>• Integrated control module diagnostic LED is flashing TEN (10) flashes. | 10<br>10 FLASHES | • Open Fuse / No 24V power to integrated control module | • High voltage surge blows off the fuse. | • Replace the Fuse. | • Verify line voltage supply is turned off before proceeding with corrections |
| • Furnace not operating.<br>• Integrated control module diagnostic LED is flashing ELEVEN (11) flashes. | 11<br>11 FLASHES | • Igniter Open | •Improperly connected igniter.<br>• Bad igniter.<br>• Poor unit ground.<br>• Poor burner ground. | •Check and correct wiring from integrated control module to igniter.<br>•Replace bad igniter.<br>•Check & correct unit ground wire.<br>• Replace bad integrated control module. | • Turn power OFF prior to repair.<br>• Replace igniter w/proper replacement part.<br>• Read precautions in “Electrostatic Discharge" section of manual. |
| • Furnace not operating.<br>• Integrated control module diagnostic LED is flashing TWELVE (12) flashes. | 12<br>12 FLASHES | • Inducer Relay Fault<br>• Improper Grounding | •Improperly connected inducer.<br>• Bad inducer.<br>• Poor unit ground.<br>• Faulty integrated control module. | •Check and correct wiring from integrated control module to inducer.<br>• Check for Blockage in inducer & in Vent / replace Inducer.<br>•Check & correct unit ground wire.<br>• Replace bad integrated control module. | • Turn power OFF prior to repair.<br>• Replace inducer w/proper replacement part.<br>• Read precautions in “Electrostatic Discharge" section of manual. |
| • Furnace fails to operate.<br>• Integrated control module diagnostic **LED** is flashing continuously. | C<br>CONTINOUS RAPID FLASH | • Polarity of 115 or 24 volt power is reversed. | • Polarity of 115 volt AC power to furnace or integrated control module is reversed.<br>• Orange and gray wires to transformer are reversed.<br>• Poor unit ground. | • Review wiring diagram to correct polarity.<br>• Reverse orange and gray wires going to transformer.<br>• Verify proper ground. Correct if necessary. | • Turn power OFF prior to repair |

[1]Integrated control module will automatically attempt to reset from lockout after one hour.

[2]LED Flash code will cease if power to the control module is interrupted through the disconnect or door switch.

| MODEL | DIP SWITCHES S2-1 , S2-2 | EXTERNAL STATIC PRESSURE, (INCHES WATER COLUMN) | | | | | | | | | | | | |
|---|---|---|---|---|---|---|---|---|---|---|---|---|---|---|
| | | 0.1 | | 0.2 | | 0.3 | | 0.4 | | 0.5 | | 0.6 | 0.7 | 0.8 |
| | | CFM | RISE | CFM | RISE | CFM | RISE | CFM | RISE | CFM | RISE | CFM | CFM | CFM |
| DM92SE0403A | OFF OFF | 628 | 54 | 582 | 59 | 530 | N/A | 478 | N/A | 428 | N/A | 370 | 319 | 282 |
| | ON OFF* | 806 | 42 | 762 | 45 | 719 | 47 | 676 | 50 | 633 | 54 | 594 | 551 | 506 |
| | ON ON** | 927 | N/A | 883 | N/A | 844 | N/A | 808 | N/A | 793 | N/A | 756 | 719 | 680 |
| | OFF ON** | 1111 | N/A | 1071 | N/A | 1033 | N/A | 1002 | N/A | 971 | N/A | 936 | 905 | 871 |
| DM92SE0603B | OFF OFF** | 725 | N/A | 662 | N/A | 599 | N/A | 519 | N/A | 479 | N/A | 418 | 348 | 285 |
| | ON OFF* | 1068 | 48 | 1018 | 50 | 971 | 53 | 926 | 55 | 880 | 58 | 834 | 789 | 767 |
| | ON ON | 940 | 54 | 891 | 57 | 836 | 61 | 787 | 65 | 762 | N/A | 714 | 666 | 619 |
| | OFF ON** | 1139 | N/A | 1089 | N/A | 1040 | N/A | 998 | N/A | 958 | N/A | 911 | 870 | 829 |
| DM92SE0803B | OFF OFF | 737 | N/A | 669 | N/A | 609 | N/A | 550 | N/A | 490 | N/A | 425 | 361 | 303 |
| | ON OFF* | 1223 | 56 | 1171 | 58 | 1125 | 61 | 1081 | 63 | 1036 | 66 | 987 | 945 | 905 |
| | ON ON | 983 | N/A | 922 | N/A | 870 | N/A | 818 | N/A | 793 | N/A | 747 | 696 | 645 |
| | OFF ON | 1160 | 59 | 1112 | 61 | 1066 | 64 | 1020 | 67 | 977 | N/A | 933 | 889 | 849 |
| DM92SE0804C | OFF OFF** | 795 | N/A | 721 | N/A | 646 | N/A | 580 | N/A | 507 | N/A | 399 | 326 | 275 |
| | ON OFF* | 1417 | 48 | 1378 | 49 | 1324 | 51 | 1284 | 53 | 1238 | 55 | 1191 | 1146 | 1092 |
| | ON ON** | 1587 | N/A | 1541 | N/A | 1496 | N/A | 1450 | N/A | 1411 | N/A | 1383 | 1339 | 1298 |
| | OFF ON** | 1794 | N/A | 1733 | N/A | 1694 | N/A | 1661 | N/A | 1623 | N/A | 1591 | 1544 | 1508 |
| DM92SE0805C | OFF OFF** | 761 | N/A | 685 | N/A | 608 | N/A | 540 | N/A | 471 | N/A | 369 | 302 | 262 |
| | ON OFF* | 1439 | 47 | 1395 | 49 | 1364 | 50 | 1316 | 52 | 1270 | 54 | 1227 | 1181 | 1135 |
| | ON ON** | 1596 | N/A | 1552 | N/A | 1508 | N/A | 1467 | N/A | 1425 | N/A | 1405 | 1354 | 1314 |
| | OFF ON** | 1800 | N/A | 1757 | N/A | 1716 | N/A | 1680 | N/A | 1644 | N/A | 1605 | 1570 | 1528 |
| DM92SE1004C | OFF OFF** | 814 | N/A | 741 | N/A | 661 | N/A | 592 | N/A | 523 | N/A | 451 | 377 | 306 |
| | ON OFF* | 1596 | 53 | 1539 | 55 | 1485 | 57 | 1443 | 59 | 1401 | 61 | 1372 | 1325 | 1280 |
| | ON ON | 1434 | 59 | 1369 | 62 | 1317 | 65 | 1273 | N/A | 1228 | N/A | 1178 | 1129 | 1081 |
| | OFF ON** | 1796 | N/A | 1744 | N/A | 1691 | N/A | 1648 | N/A | 1606 | N/A | 1568 | 1533 | 1493 |
| DM92SE1005C | OFF OFF** | 804 | N/A | 750 | N/A | 671 | N/A | 598 | N/A | 539 | N/A | 471 | 390 | 322 |
| | ON OFF* | 1624 | 52 | 1560 | 55 | 1508 | 56 | 1465 | 58 | 1422 | 60 | 1389 | 1338 | 1295 |
| | ON ON | 1440 | 59 | 1390 | 61 | 1335 | 64 | 1288 | N/A | 1236 | N/A | 1186 | 1137 | 1090 |
| | OFF ON** | 1812 | N/A | 1755 | N/A | 1708 | N/A | 1662 | N/A | 1623 | N/A | 1585 | 1548 | 1507 |
| DM92SE1205D | OFF OFF** | 1250 | N/A | 1003 | N/A | 868 | N/A | 788 | N/A | 669 | N/A | 572 | 488 | 406 |
| | ON OFF* | 2110 | 48 | 2058 | 50 | 2008 | 51 | 1957 | 52 | 1906 | 54 | 1852 | 1800 | 1750 |
| | ON ON** | 1536 | N/A | 1462 | N/A | 1408 | N/A | 1335 | N/A | 1258 | N/A | 1185 | 1109 | 1026 |
| | OFF ON | 1884 | 54 | 1821 | 56 | 1757 | 58 | 1698 | 60 | 1628 | 63 | 1550 | 1492 | 1422 |

**NOTE:**

*** DEFAULT SPEED**
**** NOT RECOMMENDED SPEED**

1. CFM in chart is without filter(s). Filters do not ship with this furnace, but must be provided by the installer. If the furnace requires two return filters, this chart assumes both filters are installed.
2. All furnaces ship as high speed cooling and medium-speed heating. Installer must adjust blower cooling & heating speed as needed.
3. For most jobs, about 400 CFM per ton when cooling is desirable.
4. INSTALLATION IS TO BE ADJUSTED TO OBTAIN TEMPERATURE RISE WITHIN THE RANGE SPECIFIED ON THE RATING PLATE.
5. The chart is for information only. For satisfactory operation, external static pressure must not exceed value shown on rating plate. The shaded area indicates ranges in excess of maximum external static pressure allowed when heating. The data for 0.6” w.c. to 0.8” w.c. is shown for air conditioning purposes only.
6. At higher altitudes, a properly derated unit will have approximately the same temperature rise at a particular CFM, while the ESP at that CFM will be lower.

| MODEL | DIP SWITCHES S2-3 , S2-4 | EXTERNAL STATIC PRESSURE, (INCHES WATER COLUMN) | | | | | | | | | |
|---|---|---|---|---|---|---|---|---|---|---|---|
| | | 0.1 | 0.2 | 0.3 | 0.4 | 0.5 | 0.6 | 0.7 | 0.8 | 0.9 | 1 |
| | | CFM | CFM | CFM | CFM | CFM | CFM | CFM | CFM | CFM | CFM |
| DM92SE0403A | OFF OFF | 628 | 582 | 530 | 478 | 428 | 370 | 319 | 282 | 239 | 201 |
| | ON OFF | 806 | 762 | 719 | 676 | 633 | 594 | 551 | 506 | 463 | 418 |
| | OFF ON | 1111 | 1071 | 1033 | 1002 | 971 | 936 | 905 | 871 | 839 | 807 |
| | ON ON | 1359 | 1322 | 1290 | 1258 | 1229 | 1203 | 1176 | 1148 | 1122 | 1095 |
| DM92SE0603B | OFF OFF | 725 | 662 | 599 | 519 | 479 | 418 | 348 | 285 | 239 | 207 |
| | ON OFF | 1068 | 1018 | 971 | 926 | 880 | 834 | 789 | 767 | 725 | 679 |
| | OFF ON | 1139 | 1089 | 1040 | 998 | 958 | 911 | 870 | 829 | 806 | 771 |
| | ON ON | 1378 | 1337 | 1301 | 1264 | 1223 | 1188 | 1150 | 1113 | 1073 | 971 |
| DM92SE0803B | OFF OFF | 737 | 669 | 609 | 550 | 490 | 425 | 361 | 303 | 251 | 208 |
| | ON OFF | 1223 | 1171 | 1125 | 1081 | 1036 | 987 | 945 | 905 | 859 | 838 |
| | OFF ON | 1160 | 1112 | 1066 | 1020 | 977 | 933 | 889 | 849 | 824 | 780 |
| | ON ON | 1431 | 1394 | 1358 | 1322 | 1281 | 1241 | 1204 | 1163 | 1131 | 1098 |
| DM92SE0804C | OFF OFF | 795 | 721 | 646 | 580 | 507 | 399 | 326 | 275 | 235 | 207 |
| | ON OFF | 1417 | 1378 | 1324 | 1284 | 1238 | 1191 | 1146 | 1092 | 1055 | 1010 |
| | OFF ON | 1794 | 1733 | 1694 | 1661 | 1623 | 1591 | 1544 | 1508 | 1469 | 1426 |
| | ON ON | 1819 | 1771 | 1727 | 1689 | 1653 | 1615 | 1574 | 1538 | 1497 | 1465 |
| DM92SE0805C | OFF OFF | 761 | 685 | 608 | 540 | 471 | 369 | 302 | 262 | 224 | 187 |
| | ON OFF | 1439 | 1395 | 1364 | 1316 | 1270 | 1227 | 1181 | 1135 | 1093 | 1051 |
| | OFF ON | 1800 | 1757 | 1716 | 1680 | 1644 | 1605 | 1570 | 1528 | 1488 | 1450 |
| | ON ON | 2186 | 2148 | 2113 | 2082 | 2016 | 2005 | 1981 | 1952 | 1936 | 1903 |
| DM92SE1004C | OFF OFF | 814 | 741 | 661 | 592 | 523 | 451 | 377 | 306 | 272 | 215 |
| | ON OFF | 1596 | 1539 | 1485 | 1443 | 1401 | 1372 | 1325 | 1280 | 1241 | 1192 |
| | OFF ON | 1796 | 1744 | 1691 | 1648 | 1606 | 1568 | 1533 | 1493 | 1445 | 1409 |
| | ON ON | 1833 | 1772 | 1724 | 1677 | 1636 | 1601 | 1563 | 1521 | 1484 | 1441 |
| DM92SE1005C | OFF OFF | 804 | 750 | 671 | 598 | 539 | 471 | 390 | 322 | 276 | 221 |
| | ON OFF | 1624 | 1560 | 1508 | 1465 | 1422 | 1389 | 1338 | 1295 | 1253 | 1211 |
| | OFF ON | 1812 | 1755 | 1708 | 1662 | 1623 | 1585 | 1548 | 1507 | 1466 | 1425 |
| | ON ON | 2223 | 2176 | 2127 | 2084 | 2046 | 2014 | 1993 | 1977 | 1948 | 1913 |
| DM92SE1205D | OFF OFF | 1250 | 1003 | 868 | 788 | 669 | 572 | 488 | 406 | 330 | 236 |
| | ON OFF | 2110 | 2058 | 2008 | 1957 | 1906 | 1852 | 1800 | 1750 | 1697 | 1646 |
| | OFF ON | 1884 | 1821 | 1757 | 1698 | 1628 | 1550 | 1492 | 1422 | 1375 | 1305 |
| | ON ON | 2233 | 2177 | 2129 | 2085 | 2036 | 1981 | 1928 | 1881 | 1833 | 1783 |

| MODEL | DIP SWITCHES S1-1 , S1-2 , S1-3 | EXTERNAL STATIC PRESSURE, (INCHES WATER COLUMN) | | | | | | | | | |
|---|---|---|---|---|---|---|---|---|---|---|---|
| | | 0.1 | 0.2 | 0.3 | 0.4 | 0.5 | 0.6 | 0.7 | 0.8 | 0.9 | 1 |
| | | CFM | CFM | CFM | CFM | CFM | CFM | CFM | CFM | CFM | CFM |
| DM92SE0403A | OFF OFF OFF | 628 | 582 | 530 | 478 | 428 | 370 | 319 | 282 | 239 | 201 |
| | OFF ON ON | 628 | 582 | 530 | 478 | 428 | 370 | 319 | 282 | 239 | 201 |
| | ON OFF ON | 628 | 582 | 530 | 478 | 428 | 370 | 319 | 282 | 239 | 201 |
| | ON ON ON | 628 | 582 | 530 | 478 | 428 | 370 | 319 | 282 | 239 | 201 |
| | ON OFF OFF | 806 | 762 | 719 | 676 | 633 | 594 | 551 | 506 | 463 | 418 |
| | ON ON OFF | 927 | 883 | 844 | 808 | 793 | 756 | 719 | 680 | 646 | 605 |
| | OFF ON OFF | 1111 | 1071 | 1033 | 1002 | 971 | 936 | 905 | 871 | 839 | 807 |
| | OFF OFF ON* | 1359 | 1322 | 1290 | 1258 | 1229 | 1203 | 1176 | 1148 | 1122 | 1095 |
| DM92SE0603B | OFF OFF OFF | 725 | 662 | 599 | 519 | 479 | 418 | 348 | 285 | 239 | 207 |
| | OFF ON ON | 725 | 662 | 599 | 519 | 479 | 418 | 348 | 285 | 239 | 207 |
| | ON OFF ON | 725 | 662 | 599 | 519 | 479 | 418 | 348 | 285 | 239 | 207 |
| | ON ON ON | 725 | 662 | 599 | 519 | 479 | 418 | 348 | 285 | 239 | 207 |
| | ON OFF OFF | 1068 | 1018 | 971 | 926 | 880 | 834 | 789 | 767 | 725 | 679 |
| | ON ON OFF | 940 | 891 | 836 | 787 | 762 | 714 | 666 | 619 | 570 | 520 |
| | OFF ON OFF | 1139 | 1089 | 1040 | 998 | 958 | 911 | 870 | 829 | 806 | 771 |
| | OFF OFF ON* | 1378 | 1337 | 1301 | 1264 | 1223 | 1188 | 1150 | 1113 | 1073 | 971 |
| DM92SE0803B | OFF OFF OFF | 737 | 669 | 609 | 550 | 490 | 425 | 361 | 303 | 251 | 208 |
| | OFF ON ON | 737 | 669 | 609 | 550 | 490 | 425 | 361 | 303 | 251 | 208 |
| | ON OFF ON | 737 | 669 | 609 | 550 | 490 | 425 | 361 | 303 | 251 | 208 |
| | ON ON ON | 737 | 669 | 609 | 550 | 490 | 425 | 361 | 303 | 251 | 208 |
| | ON OFF OFF | 1223 | 1171 | 1125 | 1081 | 1036 | 987 | 945 | 905 | 859 | 838 |
| | ON ON OFF | 983 | 922 | 870 | 818 | 793 | 747 | 696 | 645 | 598 | 546 |
| | OFF ON OFF | 1160 | 1112 | 1066 | 1020 | 977 | 933 | 889 | 849 | 824 | 780 |
| | OFF OFF ON* | 1431 | 1394 | 1358 | 1322 | 1281 | 1241 | 1204 | 1163 | 1131 | 1098 |
| DM92SE0804C | OFF OFF OFF | 795 | 721 | 646 | 580 | 507 | 399 | 326 | 275 | 235 | 207 |
| | OFF ON ON | 795 | 721 | 646 | 580 | 507 | 399 | 326 | 275 | 235 | 207 |
| | ON OFF ON | 795 | 721 | 646 | 580 | 507 | 399 | 326 | 275 | 235 | 207 |
| | ON ON ON | 795 | 721 | 646 | 580 | 507 | 399 | 326 | 275 | 235 | 207 |
| | ON OFF OFF | 1417 | 1378 | 1324 | 1284 | 1238 | 1191 | 1146 | 1092 | 1055 | 1010 |
| | ON ON OFF | 1587 | 1541 | 1496 | 1450 | 1411 | 1383 | 1339 | 1298 | 1261 | 1215 |
| | OFF ON OFF | 1794 | 1733 | 1694 | 1661 | 1623 | 1591 | 1544 | 1508 | 1469 | 1426 |
| | OFF OFF ON* | 1819 | 1771 | 1727 | 1689 | 1653 | 1615 | 1574 | 1538 | 1497 | 1465 |
| DM92SE0805C | OFF OFF OFF | 761 | 685 | 608 | 540 | 471 | 369 | 302 | 262 | 224 | 187 |
| | OFF ON ON | 761 | 685 | 608 | 540 | 471 | 369 | 302 | 262 | 224 | 187 |
| | ON OFF ON | 761 | 685 | 608 | 540 | 471 | 369 | 302 | 262 | 224 | 187 |
| | ON ON ON | 761 | 685 | 608 | 540 | 471 | 369 | 302 | 262 | 224 | 187 |
| | ON OFF OFF | 1439 | 1395 | 1364 | 1316 | 1270 | 1227 | 1181 | 1135 | 1093 | 1051 |
| | ON ON OFF | 1596 | 1552 | 1508 | 1467 | 1425 | 1405 | 1354 | 1314 | 1272 | 1237 |
| | OFF ON OFF | 1800 | 1757 | 1716 | 1680 | 1644 | 1605 | 1570 | 1528 | 1488 | 1450 |
| | OFF OFF ON* | 2186 | 2148 | 2113 | 2082 | 2016 | 2005 | 1981 | 1952 | 1936 | 1903 |
| DM92SE1004C | OFF OFF OFF | 814 | 741 | 661 | 592 | 523 | 451 | 377 | 306 | 272 | 215 |
| | OFF ON ON | 814 | 741 | 661 | 592 | 523 | 451 | 377 | 306 | 272 | 215 |
| | ON OFF ON | 814 | 741 | 661 | 592 | 523 | 451 | 377 | 306 | 272 | 215 |
| | ON ON ON | 814 | 741 | 661 | 592 | 523 | 451 | 377 | 306 | 272 | 215 |
| | ON OFF OFF | 1596 | 1539 | 1485 | 1443 | 1401 | 1372 | 1325 | 1280 | 1241 | 1192 |
| | ON ON OFF | 1434 | 1369 | 1317 | 1273 | 1228 | 1178 | 1129 | 1081 | 1030 | 983 |
| | OFF ON OFF | 1796 | 1744 | 1691 | 1648 | 1606 | 1568 | 1533 | 1493 | 1445 | 1409 |
| | OFF OFF ON* | 1833 | 1772 | 1724 | 1677 | 1636 | 1601 | 1563 | 1521 | 1484 | 1441 |
| DM92SE1005C | OFF OFF OFF | 804 | 750 | 671 | 598 | 539 | 471 | 390 | 322 | 276 | 221 |
| | OFF ON ON | 804 | 750 | 671 | 598 | 539 | 471 | 390 | 322 | 276 | 221 |
| | ON OFF ON | 804 | 750 | 671 | 598 | 539 | 471 | 390 | 322 | 276 | 221 |
| | ON ON ON | 804 | 750 | 671 | 598 | 539 | 471 | 390 | 322 | 276 | 221 |
| | ON OFF OFF | 1624 | 1560 | 1508 | 1465 | 1422 | 1389 | 1338 | 1295 | 1253 | 1211 |
| | ON ON OFF | 1440 | 1390 | 1335 | 1288 | 1236 | 1186 | 1137 | 1090 | 1042 | 999 |
| | OFF ON OFF | 1812 | 1755 | 1708 | 1662 | 1623 | 1585 | 1548 | 1507 | 1466 | 1425 |
| | OFF OFF ON* | 2223 | 2176 | 2127 | 2084 | 2046 | 2014 | 1993 | 1977 | 1948 | 1913 |
| DM92SE1205D | OFF OFF OFF | 1250 | 1003 | 868 | 788 | 669 | 572 | 488 | 406 | 330 | 236 |
| | OFF ON ON | 1250 | 1003 | 868 | 788 | 669 | 572 | 488 | 406 | 330 | 236 |
| | ON OFF ON | 1250 | 1003 | 868 | 788 | 669 | 572 | 488 | 406 | 330 | 236 |
| | ON ON ON | 1250 | 1003 | 868 | 788 | 669 | 572 | 488 | 406 | 330 | 236 |
| | ON OFF OFF | 2110 | 2058 | 2008 | 1957 | 1906 | 1852 | 1800 | 1750 | 1697 | 1646 |
| | ON ON OFF | 1536 | 1462 | 1408 | 1335 | 1258 | 1185 | 1109 | 1026 | 941 | 853 |
| | OFF ON OFF | 1884 | 1821 | 1757 | 1698 | 1628 | 1550 | 1492 | 1422 | 1375 | 1305 |
| | OFF OFF ON* | 2233 | 2177 | 2129 | 2085 | 2036 | 1981 | 1928 | 1881 | 1833 | 1783 |

| MODEL | DIP SWITCHES S2-1 , S2-2 | EXTERNAL STATIC PRESSURE, (INCHES WATER COLUMN) | | | | | | | | | | | | |
|---|---|---|---|---|---|---|---|---|---|---|---|---|---|---|
| | | 0.1 | | 0.2 | | 0.3 | | 0.4 | | 0.5 | | 0.6 | 0.7 | 0.8 |
| | | CFM | RISE | CFM | RISE | CFM | RISE | CFM | RISE | CFM | RISE | CFM | | CFM |
| DC96SE0403B DM96SE0403A | OFF OFF | 715 | 50 | 666 | 53 | 609 | N/A | 558 | N/A | 500 | N/A | 438 | 386 | 333 |
| | ON OFF* | 1110 | 32 | 1081 | 33 | 1042 | 34 | 1003 | 35 | 965 | 37 | 933 | 893 | 856 |
| | ON ON | 913 | 39 | 871 | 41 | 833 | 43 | 807 | 44 | 765 | 46 | 722 | 675 | 629 |
| | OFF ON** | 1191 | N/A | 1168 | N/A | 1135 | N/A | 1112 | N/A | 1081 | N/A | 1055 | 1024 | 998 |
| D*96SE0603B | OFF OFF | 785 | N/A | 717 | N/A | 648 | N/A | 587 | N/A | 520 | N/A | 457 | 400 | 327 |
| | ON OFF* | 1240 | 43 | 1194 | 45 | 1153 | 46 | 1104 | 48 | 1069 | 50 | 1019 | 971 | 929 |
| | ON ON | 972 | 55 | 922 | 58 | 864 | 62 | 811 | N/A | 767 | N/A | 718 | 651 | 597 |
| | OFF ON** | 1155 | N/A | 1105 | N/A | 1056 | N/A | 1006 | N/A | 958 | N/A | 908 | 857 | 808 |
| DM96SE0803B | OFF OFF | 747 | N/A | 676 | N/A | 602 | N/A | 529 | N/A | 453 | N/A | 386 | 329 | 281 |
| | ON OFF* | 1206 | 57 | 1157 | 59 | 1111 | 61 | 1059 | 62 | 1009 | 65 | 966 | 913 | 863 |
| | ON ON | 985 | N/A | 931 | N/A | 875 | N/A | 823 | N/A | 782 | N/A | 723 | 673 | 606 |
| | OFF ON** | 1149 | N/A | 1095 | N/A | 1051 | N/A | 1003 | N/A | 951 | N/A | 900 | 845 | 812 |
| D*96SE0804C | OFF OFF | 1010 | N/A | 935 | N/A | 861 | N/A | 785 | N/A | 721 | N/A | 631 | 553 | 483 |
| | ON OFF* | 1621 | 44 | 1570 | 45 | 1521 | 47 | 1467 | 48 | 1414 | 50 | 1378 | 1327 | 1274 |
| | ON ON | 1439 | 49 | 1400 | 51 | 1347 | 53 | 1291 | 55 | 1234 | N/A | 1182 | 1125 | 1065 |
| | OFF ON** | 1826 | N/A | 1775 | N/A | 1726 | N/A | 1684 | N/A | 1634 | N/A | 1588 | 1538 | 1492 |
| DM96SE0805C | OFF OFF | 1012 | N/A | 937 | N/A | 861 | N/A | 801 | N/A | 722 | N/A | 630 | 552 | 485 |
| | ON OFF* | 1836 | 39 | 1787 | 40 | 1746 | 41 | 1699 | 42 | 1653 | 43 | 1607 | 1561 | 1514 |
| | ON ON | 1431 | 50 | 1389 | 51 | 1335 | 53 | 1283 | 55 | 1226 | N/A | 1176 | 1117 | 1055 |
| | OFF ON** | 1836 | 39 | 1787 | 40 | 1746 | 41 | 1699 | 42 | 1653 | 43 | 1607 | 1561 | 1514 |
| D*96SE1005C | OFF OFF | 1012 | N/A | 940 | N/A | 863 | N/A | 800 | N/A | 715 | N/A | 627 | 561 | 496 |
| | ON OFF* | 1826 | 49 | 1783 | 50 | 1730 | 51 | 1685 | 53 | 1642 | 54 | 1596 | 1548 | 1504 |
| | ON ON | 1465 | N/A | 1402 | N/A | 1360 | N/A | 1306 | N/A | 1250 | N/A | 1197 | 1138 | 1073 |
| | OFF ON | 1602 | 55 | 1556 | 57 | 1510 | 59 | 1460 | N/A | 1411 | N/A | 1372 | 1315 | 1261 |
| D*96SE1205D | OFF OFF | 1121 | N/A | 1018 | N/A | 933 | N/A | 839 | N/A | 762 | N/A | 671 | 592 | 519 |
| | ON OFF* | 1969 | 54 | 1913 | 56 | 1862 | 57 | 1807 | 59 | 1756 | 61 | 1705 | 1647 | 1599 |
| | ON ON | 1688 | 63 | 1626 | N/A | 1564 | N/A | 1500 | N/A | 1448 | N/A | 1393 | 1334 | 1267 |
| | OFF ON | 1865 | 57 | 1812 | 59 | 1755 | 61 | 1692 | 63 | 1638 | 65 | 1587 | 1527 | 1476 |

**NOTE:**

*** DEFAULT SPEED**
**** NOT RECOMMENDED SPEED**

| MODEL | DIP SWITCHES S2-3 , S2-4 | EXTERNAL STATIC PRESSURE, (INCHES WATER COLUMN) | | | | | | | | | |
|---|---|---|---|---|---|---|---|---|---|---|---|
| | | 0.1 | 0.2 | 0.3 | 0.4 | 0.5 | 0.6 | 0.7 | 0.8 | 0.9 | 1 |
| | | CFM | CFM | CFM | CFM | CFM | CFM | CFM | CFM | CFM | CFM |
| DC96SE0403B DM96SE0403A | OFF OFF | 715 | 666 | 609 | 558 | 500 | 438 | 386 | 333 | 276 | 220 |
| | ON OFF | 1110 | 1081 | 1042 | 1003 | 965 | 933 | 893 | 856 | 820 | 803 |
| | OFF ON | 1191 | 1168 | 1135 | 1112 | 1081 | 1055 | 1024 | 998 | 978 | N/A |
| | ON ON | 1344 | 1312 | 1278 | 1247 | 1215 | 1178 | 1143 | 1114 | 1081 | 1049 |
| D*96SE0603B | OFF OFF | 785 | 717 | 648 | 587 | 520 | 457 | 400 | 327 | 269 | 206 |
| | ON OFF | 1240 | 1194 | 1153 | 1104 | 1069 | 1019 | 971 | 929 | 893 | N/A |
| | OFF ON | 1155 | 1105 | 1056 | 1006 | 958 | 908 | 857 | 808 | 772 | 723 |
| | ON ON | 1384 | 1338 | 1300 | 1257 | 1215 | 1169 | 1125 | 1080 | 1040 | 994 |
| DM96SE0803B | OFF OFF | 747 | 676 | 602 | 529 | 453 | 386 | 329 | 281 | 186 | N/A |
| | ON OFF | 1206 | 1157 | 1111 | 1059 | 1009 | 966 | 913 | 863 | 834 | 784 |
| | OFF ON | 1149 | 1095 | 1051 | 1003 | 951 | 900 | 845 | 812 | 762 | 707 |
| | ON ON | 1414 | 1380 | 1333 | 1305 | 1260 | 1223 | 1180 | 1137 | 1091 | 1047 |
| D*96SE0804C | OFF OFF | 1010 | 935 | 861 | 785 | 721 | 631 | 553 | 483 | 423 | 350 |
| | ON OFF | 1621 | 1570 | 1521 | 1467 | 1414 | 1378 | 1327 | 1274 | 1221 | 1167 |
| | OFF ON | 1826 | 1775 | 1726 | 1684 | 1634 | 1588 | 1538 | 1492 | 1448 | 1398 |
| | ON ON | 1843 | 1798 | 1753 | 1710 | 1666 | 1618 | 1574 | 1526 | 1481 | 1432 |
| DM96SE0805C | OFF OFF | 1012 | 937 | 861 | 801 | 722 | 630 | 552 | 485 | 420 | 353 |
| | ON OFF | 1836 | 1787 | 1746 | 1699 | 1653 | 1607 | 1561 | 1514 | 1471 | 1419 |
| | OFF ON | 1836 | 1787 | 1746 | 1699 | 1653 | 1607 | 1561 | 1514 | 1471 | 1419 |
| | ON ON | 2215 | 2171 | 2137 | 2098 | 2060 | 2022 | 1986 | 1948 | 1908 | 1869 |
| D*96SE1005C | OFF OFF | 1012 | 940 | 863 | 800 | 715 | 627 | 561 | 496 | 437 | 374 |
| | ON OFF | 1826 | 1783 | 1730 | 1685 | 1642 | 1596 | 1548 | 1504 | 1455 | 1406 |
| | OFF ON | 1602 | 1556 | 1510 | 1460 | 1411 | 1372 | 1315 | 1261 | 1207 | 1156 |
| | ON ON | 2225 | 2180 | 2141 | 2105 | 2070 | 2033 | 1996 | 1957 | 1923 | 1883 |
| D*96SE1205D | OFF OFF | 1121 | 1018 | 933 | 839 | 762 | 671 | 592 | 519 | 447 | 371 |
| | ON OFF | 1969 | 1913 | 1862 | 1807 | 1756 | 1705 | 1647 | 1599 | 1544 | 1481 |
| | OFF ON | 1865 | 1812 | 1755 | 1692 | 1638 | 1587 | 1527 | 1476 | 1411 | 1351 |
| | ON ON | 2268 | 2214 | 2173 | 2117 | 2068 | 2022 | 1978 | 1924 | 1874 | 1832 |

| MODEL | DIP SWITCHES S1-1 , S1-2 , S1-3 | EXTERNAL STATIC PRESSURE, (INCHES WATER COLUMN) | | | | | | | | | |
|---|---|---|---|---|---|---|---|---|---|---|---|
| | | 0.1 CFM | 0.2 CFM | 0.3 CFM | 0.4 CFM | 0.5 CFM | 0.6 CFM | 0.7 CFM | 0.8 CFM | 0.9 CFM | 1 CFM |
| DM96SE0403A | OFF OFF OFF | 715 | 666 | 609 | 558 | 500 | 438 | 386 | 333 | 276 | 220 |
| | OFF ON ON | 715 | 666 | 609 | 558 | 500 | 438 | 386 | 333 | 276 | 220 |
| | ON OFF ON | 715 | 666 | 609 | 558 | 500 | 438 | 386 | 333 | 276 | 220 |
| | ON ON ON | 715 | 666 | 609 | 558 | 500 | 438 | 386 | 333 | 276 | 220 |
| | ON OFF OFF | 1110 | 1081 | 1042 | 1003 | 965 | 933 | 893 | 856 | 820 | 803 |
| | ON ON OFF | 913 | 871 | 833 | 807 | 765 | 722 | 675 | 629 | 574 | 535 |
| | OFF ON OFF | 1191 | 1168 | 1135 | 1112 | 1081 | 1055 | 1024 | 998 | 978 | N/A |
| | OFF OFF ON* | 1344 | 1312 | 1278 | 1247 | 1215 | 1178 | 1143 | 1114 | 1081 | 1049 |
| DM96SE0603B | OFF OFF OFF | 785 | 717 | 648 | 587 | 520 | 457 | 400 | 327 | 269 | 206 |
| | OFF ON ON | 785 | 717 | 648 | 587 | 520 | 457 | 400 | 327 | 269 | 206 |
| | ON OFF ON | 785 | 717 | 648 | 587 | 520 | 457 | 400 | 327 | 269 | 206 |
| | ON ON ON | 785 | 717 | 648 | 587 | 520 | 457 | 400 | 327 | 269 | 206 |
| | ON OFF OFF | 1240 | 1194 | 1153 | 1104 | 1069 | 1019 | 971 | 929 | 893 | N/A |
| | ON ON OFF | 972 | 922 | 864 | 811 | 767 | 718 | 651 | 597 | 556 | 511 |
| | OFF ON OFF | 1155 | 1105 | 1056 | 1006 | 958 | 908 | 857 | 808 | 772 | 723 |
| | OFF OFF ON* | 1384 | 1338 | 1300 | 1257 | 1215 | 1169 | 1125 | 1080 | 1040 | 994 |
| DM96SE0803B | OFF OFF OFF | 747 | 676 | 602 | 529 | 453 | 386 | 329 | 281 | 186 | N/A |
| | OFF ON ON | 747 | 676 | 602 | 529 | 453 | 386 | 329 | 281 | 186 | N/A |
| | ON OFF ON | 747 | 676 | 602 | 529 | 453 | 386 | 329 | 281 | 186 | N/A |
| | ON ON ON | 747 | 676 | 602 | 529 | 453 | 386 | 329 | 281 | 186 | N/A |
| | ON OFF OFF | 1206 | 1157 | 1111 | 1059 | 1009 | 966 | 913 | 863 | 834 | 784 |
| | ON ON OFF | 985 | 931 | 875 | 823 | 782 | 723 | 673 | 606 | 548 | 508 |
| | OFF ON OFF | 1149 | 1095 | 1051 | 1003 | 951 | 900 | 845 | 812 | 762 | 707 |
| | OFF OFF ON* | 1414 | 1380 | 1333 | 1305 | 1260 | 1223 | 1180 | 1137 | 1091 | 1047 |
| DM96SE0804C | OFF OFF OFF | 1010 | 935 | 861 | 785 | 721 | 631 | 553 | 483 | 423 | 350 |
| | OFF ON ON | 1010 | 935 | 861 | 785 | 721 | 631 | 553 | 483 | 423 | 350 |
| | ON OFF ON | 1010 | 935 | 861 | 785 | 721 | 631 | 553 | 483 | 423 | 350 |
| | ON ON ON | 1010 | 935 | 861 | 785 | 721 | 631 | 553 | 483 | 423 | 350 |
| | ON OFF OFF | 1621 | 1570 | 1521 | 1467 | 1414 | 1378 | 1327 | 1274 | 1221 | 1167 |
| | ON ON OFF | 1439 | 1400 | 1347 | 1291 | 1234 | 1182 | 1125 | 1065 | 1000 | 930 |
| | OFF ON OFF | 1826 | 1775 | 1726 | 1684 | 1634 | 1588 | 1538 | 1492 | 1448 | 1398 |
| | OFF OFF ON* | 1843 | 1798 | 1753 | 1710 | 1666 | 1618 | 1574 | 1526 | 1481 | 1432 |
| DM96SE0805C | OFF OFF OFF | 1012 | 937 | 861 | 801 | 722 | 630 | 552 | 485 | 420 | 353 |
| | OFF ON ON | 1012 | 937 | 861 | 801 | 722 | 630 | 552 | 485 | 420 | 353 |
| | ON OFF ON | 1012 | 937 | 861 | 801 | 722 | 630 | 552 | 485 | 420 | 353 |
| | ON ON ON | 1012 | 937 | 861 | 801 | 722 | 630 | 552 | 485 | 420 | 353 |
| | ON OFF OFF | 1836 | 1787 | 1746 | 1699 | 1653 | 1607 | 1561 | 1514 | 1471 | 1419 |
| | ON ON OFF | 1431 | 1389 | 1335 | 1283 | 1226 | 1176 | 1117 | 1055 | 993 | 924 |
| | OFF ON OFF | 1836 | 1787 | 1746 | 1699 | 1653 | 1607 | 1561 | 1514 | 1471 | 1419 |
| | OFF OFF ON* | 2215 | 2171 | 2137 | 2098 | 2060 | 2022 | 1986 | 1948 | 1908 | 1869 |
| DM96SE1005C | OFF OFF OFF | 1012 | 940 | 863 | 800 | 715 | 627 | 561 | 496 | 437 | 374 |
| | OFF ON ON | 1012 | 940 | 863 | 800 | 715 | 627 | 561 | 496 | 437 | 374 |
| | ON OFF ON | 1012 | 940 | 863 | 800 | 715 | 627 | 561 | 496 | 437 | 374 |
| | ON ON ON | 1012 | 940 | 863 | 800 | 715 | 627 | 561 | 496 | 437 | 374 |
| | ON OFF OFF | 1826 | 1783 | 1730 | 1685 | 1642 | 1596 | 1548 | 1504 | 1455 | 1406 |
| | ON ON OFF | 1465 | 1402 | 1360 | 1306 | 1250 | 1197 | 1138 | 1073 | 1016 | 947 |
| | OFF ON OFF | 1602 | 1556 | 1510 | 1460 | 1411 | 1372 | 1315 | 1261 | 1207 | 1156 |
| | OFF OFF ON* | 2225 | 2180 | 2141 | 2105 | 2070 | 2033 | 1996 | 1957 | 1923 | 1883 |
| DM96SE1205D | OFF OFF OFF | 1121 | 1018 | 933 | 839 | 762 | 671 | 592 | 519 | 447 | 371 |
| | OFF ON ON | 1121 | 1018 | 933 | 839 | 762 | 671 | 592 | 519 | 447 | 371 |
| | ON OFF ON | 1121 | 1018 | 933 | 839 | 762 | 671 | 592 | 519 | 447 | 371 |
| | ON ON ON | 1121 | 1018 | 933 | 839 | 762 | 671 | 592 | 519 | 447 | 371 |
| | ON OFF OFF | 1969 | 1913 | 1862 | 1807 | 1756 | 1705 | 1647 | 1599 | 1544 | 1481 |
| | ON ON OFF | 1688 | 1626 | 1564 | 1500 | 1448 | 1393 | 1334 | 1267 | 1199 | 1125 |
| | OFF ON OFF | 1865 | 1812 | 1755 | 1692 | 1638 | 1587 | 1527 | 1476 | 1411 | 1351 |
| | OFF OFF ON* | 2268 | 2214 | 2173 | 2117 | 2068 | 2022 | 1978 | 1924 | 1874 | 1832 |

**NOTE:**

*** DEFAULT SPEED**

| MODEL | DIP SWITCHES S1-1 , S1-2 , S1-3 | EXTERNAL STATIC PRESSURE, (INCHES WATER COLUMN) | | | | | | | | | |
|---|---|---|---|---|---|---|---|---|---|---|---|
| | | 0.1 | 0.2 | 0.3 | 0.4 | 0.5 | 0.6 | 0.7 | 0.8 | 0.9 | 1 |
| | | CFM | CFM | CFM | CFM | CFM | CFM | CFM | CFM | CFM | CFM |
| DC96SE0403B | OFF OFF OFF | 629 | 566 | 509 | 450 | 388 | 327 | 269 | 228 | 195 | 153 |
| | OFF ON ON | 629 | 566 | 509 | 450 | 388 | 327 | 269 | 228 | 195 | 153 |
| | ON OFF ON | 629 | 566 | 509 | 450 | 388 | 327 | 269 | 228 | 195 | 153 |
| | ON ON ON | 629 | 566 | 509 | 450 | 388 | 327 | 269 | 228 | 195 | 153 |
| | ON OFF OFF | 949 | 899 | 853 | 809 | 786 | 742 | 697 | 652 | 609 | 575 |
| | ON ON OFF | 733 | 672 | 613 | 563 | 512 | 454 | 404 | 349 | 306 | 261 |
| | OFF ON OFF | 1126 | 1086 | 1044 | 1006 | 968 | 925 | 885 | 849 | 827 | 792 |
| | OFF OFF ON* | 1359 | 1321 | 1284 | 1251 | 1218 | 1181 | 1147 | 1114 | 1080 | 1045 |
| DC96SE0603B | OFF OFF OFF | 754 | 684 | 615 | 542 | 471 | 411 | 343 | 276 | 214 | N/A |
| | OFF ON ON | 754 | 684 | 615 | 542 | 471 | 411 | 343 | 276 | 214 | N/A |
| | ON OFF ON | 754 | 684 | 615 | 542 | 471 | 411 | 343 | 276 | 214 | N/A |
| | ON ON ON | 754 | 684 | 615 | 542 | 471 | 411 | 343 | 276 | 214 | N/A |
| | ON OFF OFF | 1332 | 1291 | 1252 | 1218 | 1173 | 1134 | 1088 | 1049 | 1013 | N/A |
| | ON ON OFF | 972 | 922 | 864 | 811 | 767 | 718 | 651 | 597 | 556 | 511 |
| | OFF ON OFF | 1155 | 1105 | 1056 | 1006 | 958 | 908 | 857 | 808 | 772 | 723 |
| | OFF OFF ON* | 1384 | 1338 | 1300 | 1257 | 1215 | 1189 | 1169 | 1125 | 1080 | 1040 |
| DC96SE0804C | OFF OFF OFF | 760 | 686 | 613 | 542 | 459 | 376 | 310 | 266 | 224 | 190 |
| | OFF ON ON | 760 | 686 | 613 | 542 | 459 | 376 | 310 | 266 | 224 | 190 |
| | ON OFF ON | 760 | 686 | 613 | 542 | 459 | 376 | 310 | 266 | 224 | 190 |
| | ON ON ON | 760 | 686 | 613 | 542 | 459 | 376 | 310 | 266 | 224 | 190 |
| | ON OFF OFF | 1390 | 1342 | 1292 | 1254 | 1201 | 1157 | 1112 | 1072 | 1022 | 985 |
| | ON ON OFF | 1397 | 1361 | 1318 | 1266 | 1224 | 1181 | 1139 | 1095 | 1050 | 1003 |
| | OFF ON OFF | 1581 | 1537 | 1492 | 1452 | 1413 | 1387 | 1347 | 1305 | 1267 | 1225 |
| | OFF OFF ON* | 1800 | 1758 | 1716 | 1678 | 1636 | 1601 | 1565 | 1529 | 1491 | 1457 |
| DC96SE1005C | OFF OFF OFF | 1211 | 1129 | 1045 | 964 | 890 | 812 | 764 | 702 | 639 | 583 |
| | OFF ON ON | 1211 | 1129 | 1045 | 964 | 890 | 812 | 764 | 702 | 639 | 583 |
| | ON OFF ON | 1211 | 1129 | 1045 | 964 | 890 | 812 | 764 | 702 | 639 | 583 |
| | ON ON ON | 1211 | 1129 | 1045 | 964 | 890 | 812 | 764 | 702 | 639 | 583 |
| | ON OFF OFF | 1650 | 1592 | 1530 | 1478 | 1428 | 1389 | 1327 | 1270 | 1213 | 1159 |
| | ON ON OFF | 1457 | 1394 | 1338 | 1294 | 1236 | 1171 | 1110 | 1048 | 986 | 919 |
| | OFF ON OFF | 1860 | 1810 | 1755 | 1702 | 1656 | 1611 | 1553 | 1511 | 1454 | 1405 |
| | OFF OFF ON* | 2230 | 2176 | 2125 | 2086 | 2038 | 1999 | 1958 | 1917 | 1880 | 1829 |
| DC96SE1205D | OFF OFF OFF | 1296 | 1190 | 1076 | 960 | 839 | 760 | 653 | 559 | 452 | 351 |
| | OFF ON ON | 1296 | 1190 | 1076 | 960 | 839 | 760 | 653 | 559 | 452 | 351 |
| | ON OFF ON | 1296 | 1190 | 1076 | 960 | 839 | 760 | 653 | 559 | 452 | 351 |
| | ON ON ON | 1296 | 1190 | 1076 | 960 | 839 | 760 | 653 | 559 | 452 | 351 |
| | ON OFF OFF | 1917 | 1843 | 1759 | 1686 | 1600 | 1513 | 1420 | 1348 | 1258 | 1173 |
| | ON ON OFF | 1611 | 1521 | 1433 | 1347 | 1246 | 1145 | 1044 | 953 | 876 | 790 |
| | OFF ON OFF | 2011 | 1936 | 1858 | 1779 | 1692 | 1610 | 1531 | 1442 | 1365 | 1266 |
| | OFF OFF ON* | 2317 | 2257 | 2196 | 2122 | 2061 | 1990 | 1914 | 1762 | 1523 | 1232 |

**WARNING**

**HIGH VOLTAGE!**
**Disconnect ALL power before servicing or installing this unit. Multiple power sources may be present. Failure to do so may cause property damage, personal injury or death.**

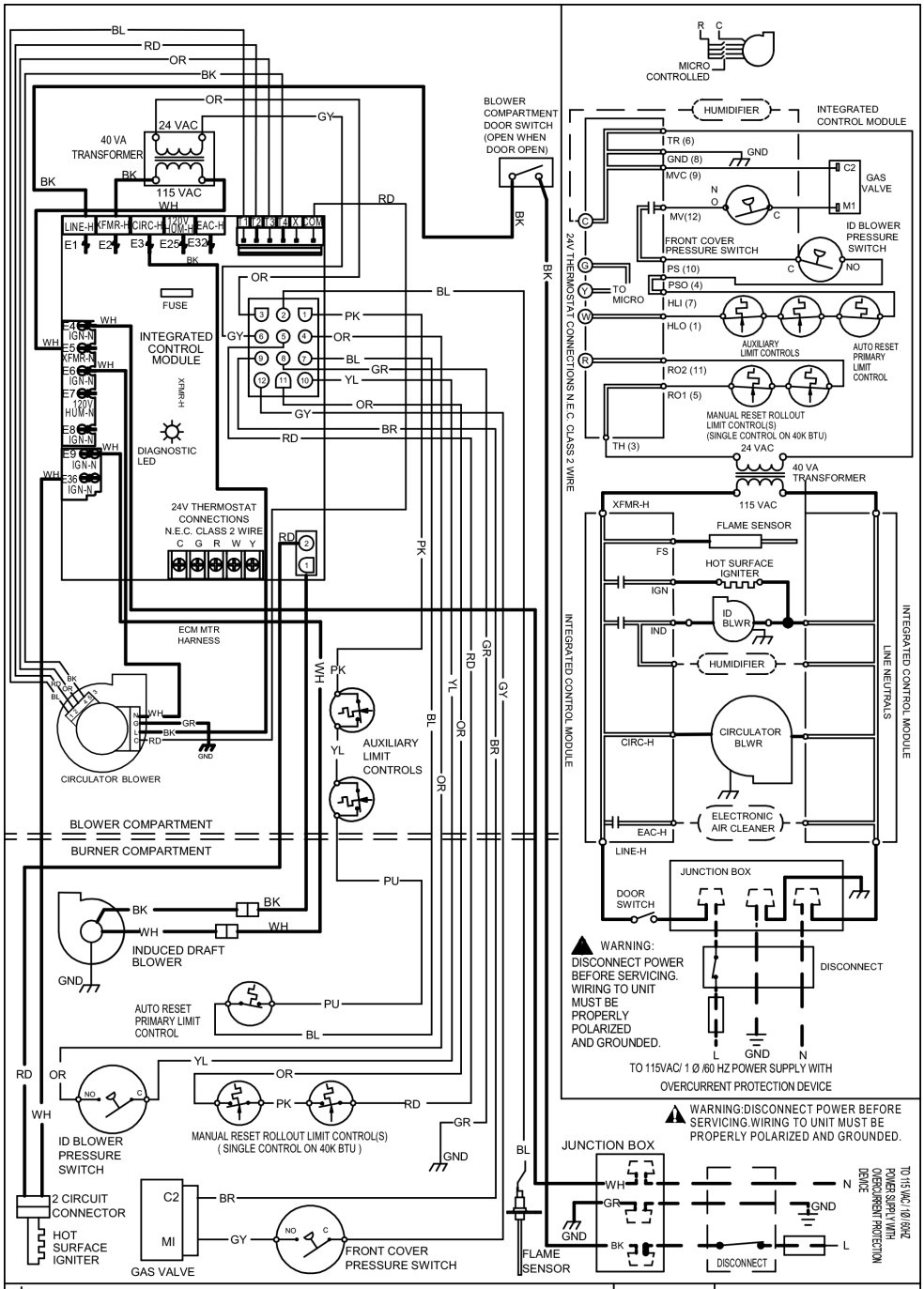


| | |
|---|---|
| STEADY ON | = NORMAL OPERATION |
| OFF | = CONTROL FAILURE |
| 1 FLASH | = SYSTEM LOCKOUT (RETRIES EXCEEDED) |
| 2 FLASHES | = PRESSURE SWITCH STUCK CLOSED |
| 3 FLASHES | = PRESSURE SWITCH STUCK OPEN |
| 4 FLASHES | = OPEN HIGH LIMIT |
| 5 FLASHES | = FLAME SENSE WITHOUT GAS VALVE |
| 6 FLASHES | = OPEN ROLLOUT |
| 7 FLASHES | = LOW FLAME SIGNAL |
| 8 FLASHES | = IGNITER RELAY FAULT |
| 9 FLASHES | = TWINNING FAULT |
| 10 FLASHES | = OPEN FUSE |
| 11 FLASHES | = IGNITER OPEN |
| 12 FLASHES | = INDUCER RELAY ERROR / IMPROPER GROUNDING |
| CONTINUOUS/RAPID FLASHES | = REVERSED 115 VAC POLARITY |

COLOR CODES:
YL YELLOW
OR ORANGE
PU PURPLE
GR GREEN
BK BLACK
PK PINK
BR BROWN
WH WHITE
BL BLUE
GY GRAY
RD RED

EQUIPMENT GND
FIELD GND
FIELD SPLICE
SWITCH (TEMP.)
IGNITER
SWITCH (PRESS.)
OVERCURRENT PROT. DEVICE
LOW VOLTAGE (24V)
LOW VOLTAGE FIELD
HI VOLTAGE (115V)
HI VOLTAGE FIELD
JUNCTION
TERMINAL
INTERNAL TO INTEGRATED CONTROL
PLUG CONNECTION

NOTES:
1. SET HEAT ANTICIPATOR ON ROOM THERMOSTAT AT 0.7 AMPS.
2. MANUFACTUR'S SPECIFIED REPLACEMENT PARTS MUST BE USED WHEN SERVICING.
3. IF ANY OF THE ORIGINAL WIRE AS SUPPLIED WITH THE FURNACE MUST BE REPLACED, IT MUST BE REPLACED WITH WIRING MATERIAL HAVING A TEMPERATURE RATING OF AT LEAST 105°C. USE COPPER CONDUCTORS ONLY.
4. BLOWER SPEEDS SHOULD BE ADJUSTED BY INSTALLER TO MATCH THE INSTALLATION REQUIREMENTS SO AS TO PROVIDE THE CORRECT HEATING TEMPERATURE RISE AND THE CORRECT COOLING CFM.
5. UNIT MUST BE PERMANENTLY GROUNDED AND CONFORM TO N.E.C. AND LOCAL CODES.

0140F02509-A

Wiring is subject to change. Always refer to the wiring diagram on the unit for the most up-to-date wiring.

## Special Instructions for Products Installed in the State of Massachusetts

For all side wall horizontally vented gas fueled equipment installed in every dwelling, building or structure used in whole or in part for residential purposes, including those owned or operated by the Commonwealth and where the side wall exhaust vent termination is less than seven (7) feet above finished grade in the area of the venting, including but not limited to decks and porches, the following requirements shall be satisfied:

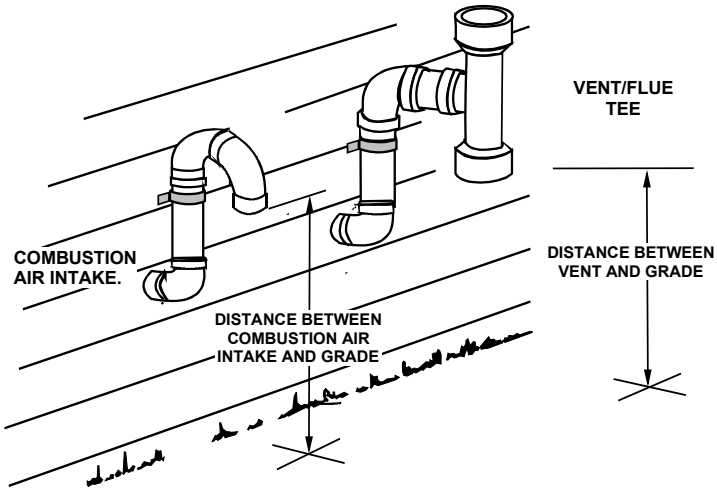


1. INSTALLATION OF CARBON MONOXIDE DETECTORS. At the time of installation of the side wall horizontal vented gas fueled equipment, the installing plumber or gasfitter shall observe that a hard wired carbon monoxide detector with an alarm and battery back-up is installed on the floor level where the gas equipment is to be installed. In addition, the installing plumber or gasfitter shall observe that a battery operated or hard wired carbon monoxide detector with an alarm is installed on each additional level of the dwelling, building or structure served by the side wall horizontal vented gas fueled equipment. It shall be the responsibility of the property owner to secure the services of qualified licensed professionals for the installation of hard wired carbon monoxide detectors
   a. In the event that the side wall horizontally vented gas fueled equipment is installed in a crawl space or an attic, the hard wired carbon monoxide detector with alarm and battery back-up may be installed on the next adjacent floor level.
   b. In the event that the requirements of this subdivision can not be met at the time of completion of installation, the owner shall have a period of thirty (30) days to comply with the above requirements; provided, however, that during said thirty (30) day period, a battery operated carbon monoxide detector with an alarm shall be installed.
2. APPROVED CARBON MONOXIDE DETECTORS. Each carbon monoxide detector as required in accordance with the above provisions shall comply with NFPA 720 and be ANSI/UL 2034 listed and IAS certified.
3. SIGNAGE. A metal or plastic identification plate shall be permanently mounted to the exterior of the building at a minimum height of eight (8) feet above grade directly in line with the exhaust vent terminal for the horizontally vented gas fueled heating appliance or equipment. The sign shall read, in print size no less than one-half (1/2) inch in size, **"GAS VENT DIRECTLY BELOW. KEEP CLEAR OF ALL OBSTRUCTIONS".**
4. INSPECTION. The state or local gas inspector of the side wall horizontally vented gas fueled equipment shall not approve the installation unless, upon inspection, the inspector observes carbon monoxide detectors and signage installed in accordance with the provisions of 248 CMR 5.08(2)(a)1 through 4.

**EXEMPTIONS**

The following equipment is exempt from 248 CMR 5.08(2)(a)1 through 4:

1. The equipment listed in Chapter 10 entitled "Equipment Not Required To Be Vented" in the most current edition of NFPA 54 as adopted by the Board; and
2. Product Approved side wall horizontally vented gas fueled equipment installed in a room or structure separate from the dwelling, building or structure used in whole or in part for residential purposes.

(c) MANUFACTURER REQUIREMENTS - GAS EQUIPMENT VENTING SYSTEM PROVIDED. When the manufacturer of Product Approved side wall horizontally vented gas equipment provides a venting system design or venting system components with the equipment, the instructions provided by the manufacturer for installation of the equipment and the venting system shall include:

3. Detailed instructions for the installation of the venting system design or the venting system components; and
4. A complete parts list for the venting system design or venting system.

(d) MANUFACTURER REQUIREMENTS - GAS EQUIPMENT VENTING SYSTEM NOT PROVIDED. When the manufacturer of a Product Approved side wall horizontally vented gas fueled equipment does not provide the parts for venting the flue gases, but identifies "special venting systems", the following requirements shall be satisfied by the manufacturer:

5. The referenced "special venting system" instructions shall be included with the appliance or equipment installation instructions; and
6. The "special venting systems" shall be Product Approved by the Board, and the instructions for that system shall include a parts list and detailed installation instructions.

(e) A copy of all installation instructions for all Product Approved side wall horizontally vented gas fueled equipment, all venting instructions, all parts lists for venting instructions, and/or all venting design instructions shall remain with the appliance or equipment at the completion of the installation.

THIS PAGE LEFT INTENTIONALLY BLANK.

THIS PAGE LEFT INTENTIONALLY BLANK.

THIS PAGE LEFT INTENTIONALLY BLANK.

**CUSTOMER FEEDBACK**

We are very interested in all product comments.
Please fill out the feedback on one of the following link:
https://daikincomfort.com/contact-us
You can also scan the QR code on the right to be directed to the feedback page.

**PRODUCT REGISTRATION**

Thank you for your recent purchase. Though not required to get the protection of the standard waranty, registering your product is a relatively short process, and entitles you to additional warranty protection, except that failure by California ad Quebec residents to register their product does not diminsh their warranty rights.

For Product Registration please register by following this link:
https://daikincomfort.com/owner-support/product-registration
You can also scan the QR code on the right to be directed o the Product Registration page.

**NOTE: SPECIFICATIONS AND PERFORMANCE DATA LISTED HEREIN ARE SUBJECT TO CHANGE WITHOUT NOTICE.**

*Visit our web site at **www.daikincomfort.com** for information on:*

- Products
- Warranties
- Customer Services
- Parts
- Contractor Programs and Training
- Financing Options

Our continuing commitment to quality products may mean a change in specifications without notice.

© 2019-2020 **DAIKIN MANUFACTURING COMPANY, L.P.**

19001 Kermier Rd., Waller, TX 77484
www.daikincomfort.com