Installation Instructions for DM80SE Ultra Low NOx Gas Furnace

CATEGORY I CATÉGORIE I

These furnaces comply with requirements embodied in the American National Standard/National Standard of Canada ANSI Z21.47·CSA-2.3 Gas Fired Central Furnaces.

Installer: Affix all manuals adjacent to the unit.

ATTENTION INSTALLING PERSONNEL

As a professional installer, you have an obligation to know the product better than the customer. This includes all safety precautions and related items.

Prior to actual installation, thoroughly familiarize yourself with this Instruction Manual. Pay special attention to all safety warnings. Often during installation or repair, it is possible to place yourself in a position which is more hazardous than when the unit is in operation.

Remember, it is **your** responsibility to install the product safely and to know it well enough to be able to instruct a customer in its safe use.

Safety is a matter of common sense...a matter of thinking before acting. Most dealers have a list of specific, good safety practices...follow them.

The precautions listed in this Installation Manual are intended as supplemental to existing practices. However, if there is a direct conflict between existing practices and the content of this manual, the precautions listed here take precedence.

RECOGNIZE THIS SYMBOL AS A SAFETY PRECAUTION

NOTE: Please contact your distributor or our website listed below for the applicable Specification Sheet referred to in this manual.

TABLE OF CONTENTS

SAFETY CONSIDERATIONS 3
- Additional Safety Considerations 5
- Shipping Inspection 5
- Electrostatic Discharge (ESD) Precautions 6
- To The Installer 6

PRODUCT APPLICATION 6
LOCATION REQUIREMENTS AND CONSIDERATIONS 7
- Clearances and Accessibility 8
- Installation Positions 8
- Horizontal Installation 8
- Furnace Suspension 9
- Existing Furnace Removal 9
- Thermostat Location 10

COMBUSTION AND VENTILATION AIR REQUIREMENTS 10
CATEGORY I VENTING (VERTICAL VENTING) 10
EXTERIOR MASONRY CHIMNEYS (CAT. I FURNACES ONLY) 11
- Checklist Summary 11
- Check 1 - Proper chimney termination 11
- Check 2 - Any Solid or Liquid Fuel Appliances Vented into this Chimney Channel 12
- Check 3 - Chimney Crown Condition 12
- Check 4 - Debris in Cleanout 12
- Check 5 - Liner Condition 12
- Check 6 - Dilution Air 13
- Check 7 - Complete the Installation 13
- Fix 1 - Liner Termination 13
- Fix 2 -Change Venting Arrangements 13
- Fix 3 - Rebuild the Crown 13
- Fix 4 - Relining 13

WARNING

Only personnel that have been trained to install, adjust, service or repair (hereinafter, "service") the equipment specified in this manual should service the equipment. The manufacturer will not be responsible for any injury or property damage arising from improper service or service procedures. If you service this unit, you assume responsibility for any injury or property damage which may result. In addition, in jurisdictions that require one or more licenses to service the equipment specified in this manual, only licensed personnel should service the equipment. Improper installation, adjustment, servicing or repair of the equipment specified in this manual, or attempting to install, adjust, service or repair the equipment specified in this manual without proper training may result in product damage, property damage, personal injury or death.

PROP 65 WARNING FOR CALIFORNIA CONSUMERS

WARNING

Cancer and Reproductive Harm - www.P65Warnings.ca.gov

0140M00517-A

IOD-2016A
09/2019

Our continuing commitment to quality products may mean a change in specifications without notice.
© 2019 DAIKIN MANUFACTURING COMPANY, L.P.
5151 San Felipe St., Suite 500, Houston, TX 77056
www.daikincomfort.com

ELECTRICAL CONNECTIONS 14
Wiring Harness 14
120 Volt Line Connections 15
Junction Box Relocation 15
24 Volt Thermostat Wiring 15
120 Volt Line Connection of Accessories 16
Humidifier and Electronic Air Cleaner 16
Fossil Fuel Applications 16
GAS SUPPLY AND PIPING 16
High Altitude Derate 17
Gas Piping Connections 17
Upflow Installations 18
Gas Piping Checks 18
CIRCULATING AIR AND FILTERS 18
Ductwork - Air Flow 18
Filters - Read This Section Before Installing The Return Air Ductwork 19
Upright Installations 19
Circulation Air Filters 19
Horizontal Installations 20
NORMAL SEQUENCE OF OPERATION 20
Power Up 20
Heating Mode 20
Cooling Mode 21
Fan Only Mode 21
START-UP PROCEDURE AND ADJUSTMENT 21
Furnace Operation 21
Furnace Start-up 21
Furnace Shutdown 22
Gas Supply Pressure Measurement 22
Gas Manifold Pressure Measurement and Adjustment 23
Gas Input Rate Measurement (Natural Gas Only) 23
Temperature Rise 24
Circulator Blower Fan Timing Adjustment 24
OPERATIONAL CHECKS 25
Checking Duct Static 25
SAFETY CIRCUIT DESCRIPTION 25
General 25
Integrated Control Module 25
Primary Limit 25
Auxiliary Limit 26
Burner Temperature Switch 26
Pressure Sensor 26
Flame Sensor 26
TROUBLESHOOTING 26
Electrostatic Discharge (ESD) Precautions 26
Diagnostic Chart 26
Fault Code Retrieval 26
Clear Fault Memory 26
Resetting From Lockout 26
MAINTENANCE 27
Annual inspection 27
Filters 27
Filter Maintenance 27
Filter Removal 27
Horizontal Unit Filter Removal 27
Induced Draft and Circulator Blower Motors 27
Flame Sensor (Qualified Servicer Only) 27
Igniter (Qualified Servicer Only) 27
Burner 28
Cleaning (Qualified Servicer Only) 28
BEFORE LEAVING AN INSTALLATION 28
REPAIR AND REPLACEMENT PARTS 28
COMPONENT ID 29
TROUBLESHOOTING CHART 30
BLOWER PERFORMANCE DATA 33
WIRING DIAGRAM 34

Safety Considerations

IMPORTANT NOTE: This unit is designed to meet the NOX requirement of 14Ng/J maximum as required by the South Coast Air Quality Management District and the San Joaquin Valley Air Pollution Control District, both in the State of California, and is intended for installation in those districts only.

This unit has a Control System that compensates for certain installation and environmental conditions. This unit must:

- Be properly installed, operated, and maintained per the instructions.
- Be serviced only by properly trained Service Technicians.

This unit is not approved for use with gasses other than Natural Gas.

Units that are not installed, maintained, or operated properly may result in “noisy” operation during the Heating Cycle. If this unit is making unusual or objectionable noises during the Heating Cycle, turn the heat off at the thermostat and contact a qualified Service organization right away.

Adhere to the following warnings and cautions when installing, adjusting, altering, servicing, or operating the furnace. To ensure proper installation and operation, thoroughly read this manual for specifics pertaining to the installation and application of this product.

This furnace is manufactured for use with natural gas only.

Install this furnace only in a location and position as specified in **LOCATION REQUIREMENTS & CONSIDERATIONS section and INSTALLATION POSITIONS section** of this manual.

Provide adequate combustion and ventilation air to the furnace as specified in **COMBUSTION & VENTILATION AIR REQUIREMENTS section of this manual.**

Combustion products must be discharged to the outdoors. Connect this furnace to an approved vent system only, as specified in **CATEGORY 1 VENTING** section of this manual.

Never test for gas leaks with an open flame. Use a commercially available soap solution made specifically for the detection of leaks to check all connections, as specified in **GAS SUPPLY AND PIPING** section of this manual.

Always install a furnace to operate within the furnace’s intended temperature-rise range with a duct system which has

external static pressure within the allowable range, as specified on the furnace rating plate and **OPERATIONAL CHECKS section** of these instructions.

When a furnace is installed so that supply ducts carry air circulated by the furnace to areas outside the space containing the furnace, the return air shall also be handled by duct(s) sealed to the furnace casing and terminating outside the space containing the furnace.

A gas-fired furnace for installation in a residential garage must be installed as specified in the **LOCATION REQUIREMENTS AND CONSIDERATIONS section** of this manual.

This furnace may be used as a construction site heater only if certain conditions are met. These conditions are listed in the **PRODUCT APPLICATION section** of this manual.

WARNING

TO PREVENT PERSONAL INJURY OR DEATH DUE TO IMPROPER INSTALLATION, ADJUSTMENT, ALTERATION, SERVICE OR MAINTENANCE, REFER TO THIS MANUAL. FOR ADDITIONAL ASSISTANCE OR INFORMATION, CONSULT A QUALIFIED INSTALLER, SERVICER AGENCY OR THE GAS SUPPLIER.

WARNING

FIRE OR EXPLOSION HAZARD

Failure to follow the safety warnings exactly could result in serious injury, death or property damage.

Never test for gas leaks with an open flame.
Use a commercially available soap solution made specifically for the detection of leaks to check all connections. A fire or explosion may result causing property damage, personal injury or loss of life.

AVERTISSEMENT

RISQUE D'INCENDIE OU D'EXPLOSION

Si les consignes de sécurité ne sont pas suivies à la lettre, cela peut entraîner la mort, de graves blessures ou des dommages matériels.

Ne jamais vérifier la présence de fuites de gaz au moyen d'une flamme nue. Vérifier tous les raccords en utilisant une solution savonneuse commerciale conçue spécialement pour la détection de fuites. Un incendie ou une explosion risque de se produire, ce qui peut entraîner la mort, des blessures ou des dommages matériels.

WARNING

IF THE INFORMATION IN THESE INSTRUCTIONS IS NOT FOLLOWED EXACTLY, A FIRE OR EXPLOSION MAY RESULT CAUSING PROPERTY DAMAGE, PERSONAL INJURY OR LOSS OF LIFE.

— DO NOT STORE OR USE GASOLINE OR OTHER FLAMMABLE VAPORS AND LIQUIDS IN THE VICINITY OF THIS OR ANY OTHER APPLIANCE.

— **WHAT TO DO IF YOU SMELL GAS:**

- DO NOT TRY TO LIGHT ANY APPLIANCE.
- DO NOT TOUCH ANY ELECTRICAL SWITCH; DO NOT USE ANY PHONE IN YOUR BUILDING.
- IMMEDIATELY CALL YOUR GAS SUPPLIER FROM A NEIGHBOR'S PHONE. FOLLOW THE GAS SUPPLIER'S INSTRUCTIONS.
- IF YOU CANNOT REACH YOUR GAS SUPPLIER, CALL THE FIRE DEPARTMENT.

— INSTALLATION AND SERVICE MUST BE PERFORMED BY A QUALIFIED INSTALLER, SERVICE AGENCY OR THE GAS SUPPLIER.

WARNING

HEATING UNIT SHOULD NOT BE UTILIZED WITHOUT REASONABLE, ROUTINE, INSPECTION, MAINTENANCE AND SUPERVISION. IF THE BUILDING IN WHICH ANY SUCH DEVICE IS LOCATED WILL BE VACANT, CARE SHOULD BE TAKEN THAT SUCH DEVICE IS ROUTINELY INSPECTED, MAINTAINED AND MONITORED. IN THE EVENT THAT THE BUILDING MAYBE EXPOSED TO FREEZING TEMPERATURES AND WILL BE VACANT, ALL WATER-BEARING PIPES SHOULD BE DRAINED, THE BUILDING SHOULD BE PROPERLY WINTERIZED, AND THE WATER SOURCE CLOSED. IN THE EVENT THAT THE BUILDING MAY BE EXPOSED TO FREEZING TEMPERATURES AND WILL BE VACANT, ANY HYDRONIC COIL UNITS SHOULD BE DRAINED AS WELL AND, IN SUCH CASE, ALTERNATIVE HEAT SOURCES SHOULD BE UTILIZED.

WARNING

SHOULD OVERHEATING OCCUR OR THE GAS SUPPLY FAIL TO SHUT OFF, TURN OFF THE MANUAL GAS SHUTOFF VALVE EXTERNAL TO THE FURNACE BEFORE TURNING OFF THE ELECTRICAL SUPPLY.

WARNING

POSSIBLE PROPERTY DAMAGE, PERSONAL INJURY OR DEATH DUE TO FIRE, EXPLOSION, SMOKE, SOOT, CONDENSATION, ELECTRICAL SHOCK OR CARBON MONOXIDE MAY RESULT FROM IMPROPER INSTALLATION, REPAIR OPERATION, OR MAINTENANCE OF THIS PRODUCT.

WARNING

TO PREVENT PERSONAL INJURY OR DEATH DUE TO ASPHYXIATION, THIS FURNACE MUST BE CATEGORY I VENTED. DO NOT VENT USING CATEGORY III VENTING.
PROVISIONS MUST BE MADE FOR VENTING COMBUSTION PRODUCTS OUTDOORS THROUGH A PROPER VENTING SYSTEM. THE LENGTH OF FLUE PIPE COULD BE A LIMITING FACTOR IN LOCATING THE FURNACE.

WARNING

CARBON MONOXIDE POISONING HAZARD

Failure To Follow The Steps Outlined Below For Each Appliance Connected To The Venting System Being Placed Into Operation Could Result In Carbon Monoxide Poisoning Or Death. The Following Steps Shall Be Followed For Each Appliance Connected To The Venting System Being Placed Into Operation, While All Other Appliances Connected To The Venting System Are Not In Operation:

1) Seal Any Unused Openings In The Venting System.
2) Inspect The Venting System For Proper Size And Horizontal Pitch, As Required In The National Fuel Gas Code, Ansi Z223.1/nfpa 54 Or The Natural Gas And Propane Installation Code, Csa B149.1 And These Instructions. Determine That There Is No Blockage Or Restriction, Leakage, Corrosion And Other Deficiencies Which Could Cause An Unsafe Condition.
3) As Far As Practical, Close All Building Doors And Windows And All Doors Between The Space In Which The Appliance(s) Connected To The Venting System Are Located And Other Spaces Of The Building.
4) Close Fireplace Dampers.
5) Turn On Clothes Dryers And Any Appliance Not Connected To The Venting System. Turn On Any Exhaust Fans, Such As Range Hoods And Bathroom Exhausts, So They Are Operating At Maximum Speed. Do Not Operate A Summer Exhaust Fan.
6) Follow The Lighting Instructions. Place The Appliance Being Inspected Into Operation. Adjust The Thermostat So Appliance Is Operating Continuously.
7) Test For Spillage From Draft Hood Equipped Appliances At The Draft Hood Relief Opening After 5 Minutes Of Main Burner Operation. Use The Flame Of A Match Or Candle.
8) If Improper Venting Is Observed During Any Of The Above Tests, The Venting System Must Be Corrected In Accordance With The National Fuel Gas Code, Ansi Z223.1/nfpa 54 And/or Natural Gas And Propane Installation Code, Csa B149.1.
9) After It Has Been Determined That Each Appliance Connected To The Venting System Properly Vents When Tested As Outlined Above, Return Doors, Windows, Exhaust Fans, Fireplace Dampers And Any Other Gas-fired Burning Appliance To Their Previous Conditions Of Use.

AVERTISSEMENT

RISQUE D'INTOXICATION AU MONOXYDE DE CARBONE

Si les étapes décrites ci-dessous ne sont pas suivies pour chacun des appareils raccordés au système de ventilation au moment de sa mise en marche, cela peut entraîner une intoxication au monoxyde de carbone ou la mort. Les étapes suivantes doivent être suivies pour chacun des appareils raccordés au système de ventilation au moment de sa mise en marche, alors que tous les autres appareils raccordés au système de ventilation ne sont pas en marche:

1) Sceller toutes les ouvertures inutilisées du système de ventilation.
2) Inspecter le système de ventilation afin de vérifier si la taille et l'inclinaison par rapport à l'horizontale sont conformes aux exigences du National Fuel Gas Code, ANSI Z223.1/NFPA 54 ou du Code d'installation du gaz naturel et du propane, CSA B149.1 et à ces instructions. Vérifier qu'il n'y pas d'obstruction ou de pourraient entraîner une situation dangereuse.
3) Si possible, fermer toutes les portes et fenêtres du bâtiment ainsi que toutes les portes séparant l'endroit où se trouvent les appareils raccordés au système de ventilation et less autres zones du bâtiment.
4) Fermer le registre des foyers.
5) Mettre les sécheuses en marche ainsi que tous les autres appareils qui ne sont pas raccordés au systéme de ventilation. Mettre en marche tous les ventilateurs de tirage, comme celui des hottes de cuisine et des salles de bains, et les régler à la puissance maximale. Ne pas mettre en marche les ventilateurs d'été.
6) Suivre les instructions d'allumage. Mettre en marche l'appareil soumis à l'inspection. Régler le thermostat de manièr à ce que l'appareil fonctionne en continu.
7) Vérifier la présence de fuite au niveau de l'ouverture du coupe-tirage des appareils qui en sont dotés après 5 minutes de fontionnement du brûleur principal. Utiliser la flamme d'une allumette ou d'une bougie.
8) Si un problème de ventilation est observé pendant l'un des essaid décrits ci-dessus, des correctifs doivent être apportés au système de ventilation conformé National Fuel Gas Code, Ansi Z223.1/nfpa 54 And/or Natural Gas And Propane Installation Code, Csa B149.1.
9) Une fois qu'il été déterminé que chaque appareil raccordé au système de ventilation fontionne correctement au moyen des essais décrits ci-dessus, les portes, les fenêtres, les ventilateurs, les registres de foyer et tous les autres appareils de combustion alimentés au gaz doivent être remis dans leur état initial.

DANGER

CARBON MONOXIDE POISONING HAZARD

Special Warning for Installation of Furnace or Air Handling Units in Enclosed Areas such as Garages, Utility Rooms or Parking Areas

Carbon monoxide producing devices (such as an automobile, space heater, gas water heater, etc.) should not be operated in enclosed areas such as unventilated garages, utility rooms or parking areas because of the danger of carbon monoxide (CO) poisoning resulting from the exhaust emissions. If a furnace or air handler is installed in an enclosed area such as a garage, utility room or parking area and a carbon monoxide producing device is operated therein, there must be adequate, direct outside ventilation.

This ventilation is necessary to avoid the danger of CO poisoning which can occur if a carbon monoxide producing device continues to operate in the enclosed area. Carbon monoxide emissions can be (re)circulated throughout the structure if the furnace or air handler is operating in any mode.

CO can cause serious illness including permanent brain damage or death. B10259-216

DANGER
PELIGRO

RIESGO DE INTOXICACIÓN POR MONÓXIDO DE CARBONO

Advertencia especial para la instalación de calentadores ó manejadoras de aire en áreas cerradas como estacionamientos ó cuartos de servicio.

Los equipos ó aparatos que producen monóxido de carbono (tal como automóvil, calentador de gas, calentador de agua por medio de gas, etc) no deben ser operados en áreas cerradas debido al riesgo de envenenamiento por monóxido de carbono (CO) que resulta de las emisiones de gases de combustión. Si el equipo ó aparato se opera en dichas áreas, debe existir una adecuada ventilación directa al exterior.

Esta ventilación es necesaria para evitar el peligro de envenenamiento por CO, que puede ocurrir si un dispositivo que produce monóxido de carbono sigue operando en el lugar cerrado.

Las emisiones de monóxido de carbono pueden circular a través del aparato cuando se opera en cualquier modo.

El monóxido de carbono puede causar enfermedades severas como daño cerebral permanente ó muerte. B10259-216

DANGER

RISQUE D'EMPOISONNEMENT AU MONOXYDE DE CARBONE

Advertencia especial para la instalación de calentadores ó manejadoras de aire en áreas cerradas como estacionamientos ó cuartos de servicio.

Avertissement special au sujet de l'installation d'appareils de hauffage ou de traitement d'air dans des endroits clos, tets les garages, les locaux d'entretien et les stationnements. Evitez de mettre en marche les appareils produisant du monoxyde de carbone (tels que les automobile, les appareils de chauffage autonome,etc.) dans des endroits non ventilés tels que les d'empoisonnement au monoxyde de carbone. Si vous devez faire fonctionner ces appareils dans un endroit clos, assures-vous qu'il y ait une ventilation directe provenant de l'exterier.

Cette ventilation est nécessaire pour éviter le danger d'intoxication au CO pouvant survenir si un appareil produisant du monoxyde de carbone continue de fonctionner au sein de la zone confinée.

Les émissions de monoxyde de carbone peuvent etre recircules dans les endroits clos, si l'appareil de chauffage ou de traitement d'air sont en marche.

Le monoxyde de carbone peut causer des maladies graves telles que des dommages permanents au cerveau et meme la mort. B10259-216

Additional Safety Considerations

- This furnace is approved for Category I Venting only.
- Provisions must be made for venting combustion products outdoors through a proper venting system. The length of flue pipe could be a limiting factor in locating the furnace.

Shipping Inspection

All units are securely packed in shipping containers tested according to International Safe Transit Association specifications. The carton must be checked upon arrival for external damage. If damage is found, a request for inspection by carrier's agent must be made in writing immediately.

The furnace must be carefully inspected on arrival for damage and bolts or screws which may have come loose in transit. In the event of damage the consignee should:

1. Make a notation on delivery receipt of any visible damage to shipment or container.
2. Notify carrier promptly and request an inspection.
3. With concealed damage, carrier must be notified as soon as possible - preferably within five days.
4. File the claim with the following support documents within a nine month statute of limitations.

- Original or certified copy of the Bill of Lading, or indemnity bond.
- Original paid freight bill or indemnity in lieu thereof.
- Original or certified copy of the invoice, showing trade and other discounts or reductions.
- Copy of the inspection report issued by carrier's representative at the time damage is reported to carrier.

The carrier is responsible for making prompt inspection of damage and for a thorough investigation of each claim. The distributor or manufacturer will not accept claims from dealers for transportation damage.

Keep this literature in a safe place for future reference.

Electrostatic Discharge (ESD) Precautions

NOTE: Discharge your body's static electricity before touching unit. An electrostatic discharge can adversely affect electrical components.

Use the following precautions during furnace installation and servicing to protect the integrated control module from damage. By putting the furnace, the control, and the person at the same electrostatic potential, these steps will help avoid exposing the integrated control module to electrostatic discharge. This procedure is applicable to both installed and non-installed (ungrounded) furnaces.

1. Disconnect all power to the furnace. Do not touch the integrated control module or any wire connected to the control prior to discharging your body's electrostatic charge to ground.
2. Firmly touch a clean, unpainted, metal surface of the furnaces near the control. Any tools held in a person's hand during grounding will be discharged.
3. Service integrated control module or connecting wiring following the discharge process in step 2. Use caution not to recharge your body with static electricity; (i.e., do not move or shuffle your feet, do not touch ungrounded objects, etc.). If you come in contact with an ungrounded object, repeat step 2 before touching control or wires.
4. Discharge your body to ground before removing a new control from its container. Follow steps 1 through 3 if installing the control on a furnace. Return any old or new controls to their containers before touching any ungrounded object.

To The Installer

Before installing this unit, please read this manual thoroughly to familiarize yourself with specific items which must be adhered to, including but not limited to: unit maximum external static pressure, gas pressures, BTU input rating, proper electrical connections, circulating air temperature rise, minimum or maximum CFM, and motor speed connections, and venting. These furnaces are designed for Category I venting only.

⚠ WARNING

To prevent property damage, personal injury or death due to fire, do not install this furnace in a mobile home, trailer, or recreational vehicle.

Product Application

This furnace is primarily designed for residential home-heating applications. It is NOT designed or certified for use in mobile homes, trailers or recreational vehicles. Neither is it designed or certified for outdoor applications. The furnace **must** be installed indoors (i.e., attic space, crawl space, or garage area provided the garage area is enclosed with an operating door).

This furnace can be used in the following non-industrial commercial applications:

Schools, Office buildings, Churches, Retail stores, Nursing homes, Hotels/motels, Common or office areas

In such applications, the furnace must be installed with the following stipulations:

- It must be installed per the installation instructions provided and per local and national codes.
- It must be installed indoors in a building constructed on site.
- It must be part of a ducted system and not used in a free air delivery application.
- It must not be used as a “make-up” air unit.
- All other warranty exclusions and restrictions apply.

This furnace may be used as a construction site heater **ONLY** if the following conditions are met:

- The vent system is permanently installed per these installation instructions.
- A room thermostat is used to control the furnace. Fixed jumpers that provide continuous heating CANNOT be used and can cause long term equipment damage. Bi-metal thermostats, or any thermostat affected by vibration must not be used during construction.
- Return air ducts are provided and sealed to the furnace.
- A return air temperature range between 60°F (16°C) and 80°F (27°C) is maintained.
- Air filters are installed in the system and replaced daily during construction and upon completion of construction.
- The input rate and temperature rise are set per the furnace rating plate.
- 100% outside air must be used for combustion during construction. Temporary ducting may be used to supply outside air to the furnace for combustion – do not connect this duct directly to the furnace. Size this duct according to NFPA 54/ANSI Z223.1 section for Combustion and Ventilation Air.
- The furnace heat exchanger, components, duct system, air filters and evaporator coils are thoroughly cleaned following final construction clean up by a qualified person.
- All furnace operating conditions (including ignition, input rate, temperature rise and venting) are verified by a qualified person according to these installation instructions.
- Furnace doors must be in place on the furnace while the furnace is operating in any mode.

Damage or repairs due to failure to comply with these requirements are not covered under the warranty.

To ensure proper furnace operation, install, operate and maintain the furnace in accordance with these installation and operation instructions, all local building codes and ordinances. In their absence, follow the latest edition of the National Fuel Gas Code (NFPA 54/ANSI Z223.1), local plumbing or waste water codes, and other applicable codes.

A copy of the National Fuel Gas Code (NFPA 54/ANSI Z223.1) can be obtained from any of the following:

American National Standards Institute
25 West 43rd Street, 4th Floor
New York, NY 10036

National Fire Protection Association
1 Batterymarch Park
Quincy, MA 02169-7471

CSA International
8501 East Pleasant Valley
Cleveland, OH 44131

Additional helpful publications available from the NFPA are, NFPA 90A - Installation of Air Conditioning and Ventilating System and NFPA 90B - Warm Air Heating and Air Conditioning System.

The rated heating capacity of the furnace should be greater than or equal to the total heat loss of the area to be heated. The total heat loss should be calculated by an approved method or in accordance with “ASHRAE Guide” or “Manual J-Load Calculations” published by the Air Conditioning Contractors of America.

Location Requirements and Considerations

⚠ WARNING

To prevent possible equipment damage, property damage, personal injury or death, the following bullet points must be observed when installing this unit.

Follow the instructions listed below when selecting a furnace location. Refer also to the guidelines provided in *Combustion and Ventilation Air Requirements.*

- Centrally locate the furnace with respect to the proposed or existing air distribution system.
- Ensure the temperature of the return air entering the furnace is between 55°F and 100°F when the furnace is heating.
- Provisions must be made for venting combustion products outdoors through a proper venting system. The length of flue pipe could be a limiting factor in locating the furnace.
- Ensure adequate combustion air is available for the furnace. Improper or insufficient combustion air can expose building occupants to gas combustion products that could include carbon monoxide. Refer to *Combustion and Ventilation Air Requirements.*
- The furnace must be level. If the furnace is to be set on a floor that may become wet or damp at times, the furnace should be supported above the floor on a concrete base sized approximately 1-1/2" larger than the base of the furnace.
- Ensure upflow or horizontal furnaces are not installed directly on carpeting, or any other combustible material. The only combustible material allowed is wood.
- Exposure to contaminated combustion air will result in safety and performance-related problems. Do not install the furnace where the combustion air is exposed to the following substances:

  permanent wave solutions
  chlorinated waxes or cleaners
  chlorine-based swimming pool chemicals
  carbon tetrachloride
  water softening chemicals
  swiming pool chemicals
  deicing salts or chemicals
  halogen type refrigerants
  printing inks
  cleaning solutions (such as perchloroethylene)
  paint removers
  varnishes
  hydrochloric acid
  cements and glues
  antistatic fabric softeners for clothes dryers
  masonry acid washing materials

- If the furnace is used in connection with a cooling unit, install the furnace upstream or in parallel with the cooling unit coil. Premature heat exchanger failure will result if the cooling unit coil is placed ahead of the furnace.

  For vertical (upflow) applications, the minimum cooling coil width shall not be less than furnace width minus 1". Additionally, a coil installed above an upflow furnace may be the same width as the furnace or may be one size larger than the furnace. Example: a "C" width coil may be installed with a "B" width furnace.

  For upflow applications, the front of the coil and furnace must face the same direction.
- If the furnace is installed in a residential garage, position the furnace so that the burners and ignition source are located not less than 18 inches above the floor. Protect the furnace from physical damage by vehicles.
- If the furnace is installed horizontally, ensure access doors are not on the "up/top" or "down/bottom" side of the furnace.
- Do not connect this furnace to a chimney flue that serves a separate appliance designed to burn solid fuel.

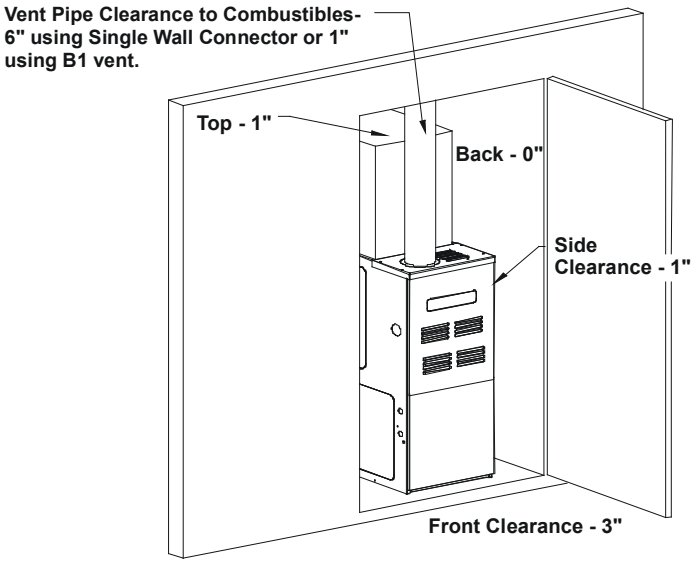

Figure 1

- Adequate combustion/ventilation air must be supplied to the closet. Improper or insufficient combustion air can expose building occupants to gas combustion products that could include carbon monoxide.
- Furnace must be **completely** sealed to floor or base. Combustion/ ventilation air supply pipes must terminate 12" from top of closet and 12" from floor of closet. DO NOT remove solid base plate for side return.
- Return air ducts must be **completely** sealed to the furnace and terminate outside the enclosure surfaces.

Clearances and Accessibility

NOTE: For servicing or cleaning, a 24” front clearance is required. Unit connections (electrical, flue and drain) may necessitate greater clearances than the minimum clearances listed above. In all cases, accessibility clearance must take precedence over clearances from the enclosure where accessibility clearances are greater.

Clearance in accordance with local installation codes, the requirements of the gas supplier and the manufacturer’s installation instructions.
Dégaugement conforme aux codes d’installation locaux, aux exigences du fournisseur de gaz et aux instructions d’installation du fabricant.

VENT		SIDES	FRONT	BACK	TOP (PLENUM)
B1-VENT	SINGLE				
1"	6"	1"	3"	0"	1"

Top clearance for horizontal configuration - 1”
Table 1

Installations must adhere to the clearances to combustible materials to which this furnace has been design certified. The minimum clearance information for this furnace is provided on the unit’s clearance label. These clearances must be permanently maintained. Clearances must also accommodate an installation’s gas, electrical, and drain line connections.

NOTE: In addition to the required clearances to combustible materials, a minimum of 24” service clearance must be available in front of the unit.

Installation Positions

An upflow furnace may be installed in an upright position or horizontal on either the left or right side panel. Do not install this furnace on its back. For vertically installed *upflow* furnaces, return air ductwork may be attached to the side panel(s) and/or basepan. For *horizontally* installed *upflow* furnaces, return air ductwork must be attached to the basepan. Contact your distributor for proper airflow requirements and number of required ductwork connections. Refer to, “Recommended Installation Positions” for approproate installation positions, ductwork connections, and resulting airflow arrangements.

NOTE: Ductwork must never be attached to the back of the furnace.

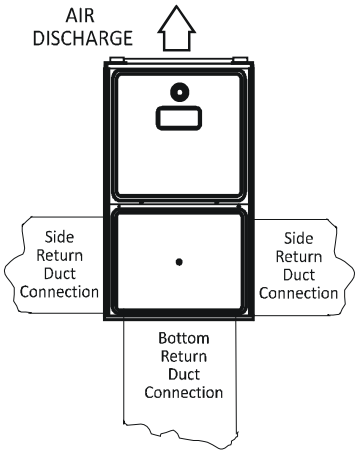

UPFLOW UPRIGHT
Figure 2

Horizontal Installation

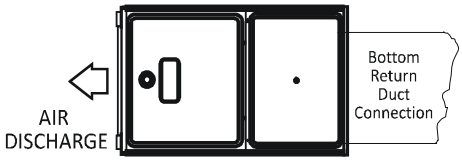

UPFLOW HORIZONTAL
LEFT AIR DISCHARGE

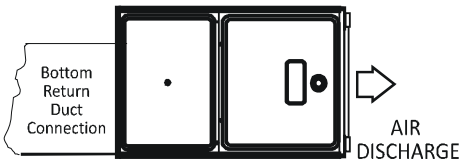

UPFLOW HORIZONTAL
RIGHT AIR DISCHARGE

Recomended Installarion Positions
Figure 3

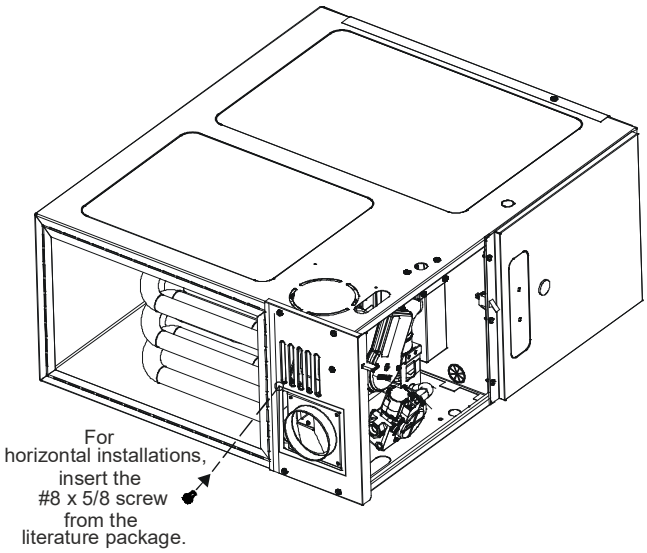

Figure 4

Line contact to framing is permitted when installed in the horizontal configuration. Line contact is defined as the portion of the cabinet that is formed by the intersection of the top and side. ACCESSIBILITY CLEARANCE, WHERE GREATER, SHOULD TAKE PRECEDENCE OVER MINIMUM FIRE PROTECTION CLEARANCE. A gas-fired furnace for installation in a residential garage must be installed so that the ignition source and burners are located not less than eighteen inches (18") above the floor and is protected or located to prevent physical damage by vehicles. A gas furnace must not be installed directly on carpeting, tile, or other combustible materials other than wood flooring.

Furnace Suspension

If suspending the furnace from rafters or joist, use 3/8" threaded rod and 2"x2"x3/8" angle iron as shown below. The length of rod will depend on the application and the clearances necessary.

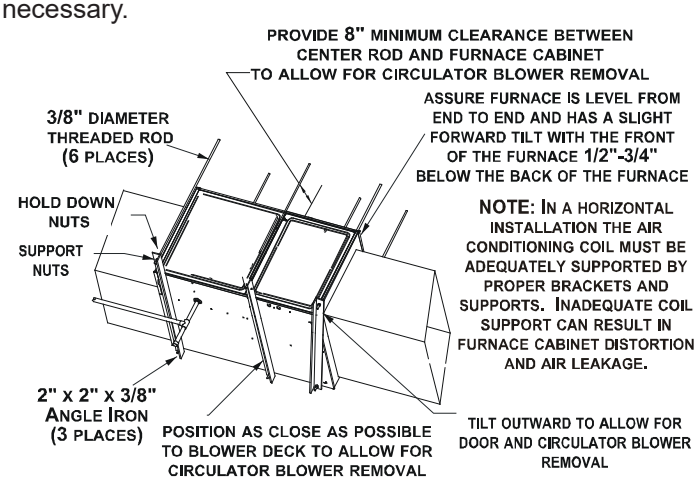

Suspended Furnace
Figure 5

Existing Furnace Removal

NOTE: When an existing furnace is removed from a venting system serving other appliances, the venting system may be too large to properly vent the remaining attached appliances.

The following vent testing procedure is reproduced from the **American National Standard/National Standard of Canada for Gas-Fired Central Furnaces ANSI Z21.47-Latest Edition, CSA-2.3-Latest Edition Section 1.23.1.** The following steps shall be followed with each appliance connected to the venting system placed in operation, while any other appliances connected to the venting system are not in operation:

a. Seal any unused openings in the venting system;
b. Inspect the venting system for proper size and horizontal pitch, as required by the National Fuel Gas Code, ANSI Z223.1 and these instructions. Determine that there is no blockage or restriction, leakage, corrosion and other deficiencies which could cause an unsafe condition;
c. In so far as practical, close all building doors and windows and all doors between the space in which the appliance(s) connected to the venting system are located and other spaces of the building. Turn on clothes dryers and any appliance not connected to the venting system. Turn on any exhaust fans, such as range hoods and bathroom exhausts, so they shall operate at maximum speed. Do not operate a summer exhaust fan. Close fireplace dampers;
d. Follow the lighting instructions. Place the appliance being inspected in operation. Adjust thermostat so appliance shall operate continuously;
e. Test for draft hood equipped appliance spillage at the draft hood relief opening after 5 minutes of main burner operation. Use the flame of a match or candle;
f. After it has been determined that each appliance connected to the venting system properly vents when tested as outlined above, return doors, windows, exhaust fans, fireplace dampers and any other gas burning appliance to their previous conditions of use;
g. If improper venting is observed during any of the above tests, the common venting system must be corrected.

Corrections must be in accordance with the latest edition of the National Fuel Gas Code NFPA 54/ANSI Z223.1.

If resizing is required on any portion of the venting system, use the appropriate table in the latest edition of the National Fuel Gas Code ANSI Z223.1.

Thermostat Location

The thermostat should be placed approximately five feet from the floor on a vibration-free, inside wall in an area having good air circulation. Do not install the thermostat where it may be influenced by any of the following:

- Drafts, or dead spots behind doors, in corners, or under cabinets.
- Hot or cold air from registers.
- Radiant heat from the sun.
- Light fixtures or other appliances.
- Radiant heat from a fireplace.
- Concealed hot or cold water pipes, or chimneys.
- Unconditioned areas behind the thermostat, such as an outside wall.

Consult the instructions packaged with the thermostat for mounting instructions and further precautions.

Combustion and Ventilation Air Requirements

WARNING

To avoid property damage, personal injury or death, sufficient fresh air for proper combustion and ventilation of flue gases must be supplied. Most homes require outside air be supplied into the furnace area.

Improved construction and additional insulation in buildings have reduced heat loss by reducing air infiltration and escape around doors and windows. These changes have helped in reducing heating/cooling costs but have created a problem supplying combustion and ventilation air for gas fired and other fuel burning appliances. Appliances that pull air out of the house (clothes dryers, exhaust fans, fireplaces, etc.) increase the problem by starving appliances for air.

House depressurization can cause back drafting or improper combustion of gas-fired appliances, thereby exposing building occupants to gas combustion products that could include carbon monoxide.

If this furnace is to be installed in the same space with other gas appliances, such as a water heater, ensure there is an adequate supply of combustion and ventilation air for all appliances. Refer to the latest edition of the National Fuel Gas Code NFPA 54/ANSI Z223.1 or applicable provisions of the local building codes for determining the combustion air requirements for the appliances.

This furnace must use indoor air for combustion. It cannot be installed as a direct vent (i.e., sealed combustion) furnace.

Most homes will require outside air be supplied to the furnace area by means of ventilation grilles or ducts connecting directly to the outdoors or spaces open to the outdoors such as attics or crawl spaces. A furnace installed in a confined space (i.e., a closet or utility room) must have two ventilation openings with a total minimum free area of 0.25 square inches per 1,000 BTU/hr of furnace input rating. Refer to Specification Sheet applicable to your model for minimum clearances to combustible surfaces. One of the ventilation openings must be within 12” of the top; the other opening must be within 12” of the bottom of the confined space. In a typical construction, the clearance between the door and door frame is usually adequate to satisfy this ventilation requirement.

Category I Venting (Vertical Venting)

WARNING

To prevent possible personal injury or death due to asphyxiation, this furnace must be Category I vented. Do not vent using Category III venting.

Category I Venting is venting at a non-positive pressure. A furnace vented as Category I is considered a fan-assisted appliance and the vent system does not have to be “gas tight.” **NOTE:** Single stage gas furnaces with induced draft blowers draw products of combustion through a heat exchanger allowing, in some instances, common venting with natural draft appliances (i.e. water heaters). All installations must be vented in accordance with the latest edition of the National Fuel Gas Code NFPA 54/ANSI Z223.1 .

Note: The vertical height of the category 1 venting system must be at least as great as the horizontal length of the vertical system.

WARNING

To prevent possible personal injury or death due to asphyxiation, common venting with other manufacturer’s induced draft appliances is not allowed.

The minimum vent diameter for the Category I venting system is as shown:

MODEL	MINIMUM VENT
	UPFLOW
40	4 Inch
60	4 Inch
80	4 Inch

Table 2

Under some conditions, larger vents than those shown above may be required or allowed. *When an existing furnace is removed from a venting system serving other appliances*, the venting system may be too large to properly vent the remaining attached appliances.

Exterior Masonry Chimneys (Category I Furnaces Only)

An exterior masonry chimney is defined as a "Masonry" chimney exposed to the outdoors on one or more sides below the roof line." The ability to use a clay lined masonry chimney depends on a parameter not associated with interior chimneys. This variable is the geographic location of the installation. Researchers have discovered that the winter design temperatures have a direct impact on the suitability of this type of venting. In most situations, the existing masonry chimneys will require a properly sized metallic liner.

WARNING

Possibility of property damage, personal injury or death

damaging condensation can occur inside masonry chimneys when a single fan-assisted Category I appliance (80% AFUE furnace) is vented without adequate dilution air. Do not connect an 80% furnace to a masonry chimney unless the furnace is common vented with a draft hood equipped appliance or the chimney is lined with a metal liner or Type B metal vent. All installations using masonry chimneys must be sized in accordance with the appropriate venting tables. If an 80% furnace is common vented with a draft hood equipped appliance, the potential for condensation damage may still exist with extremely cold conditions, long vent connectors, exterior chimneys, or any combination of these conditions. The risk of condensation damage is best avoided by using masonry chimney as a pathway for properly sized metal liner or Type B metal vent.

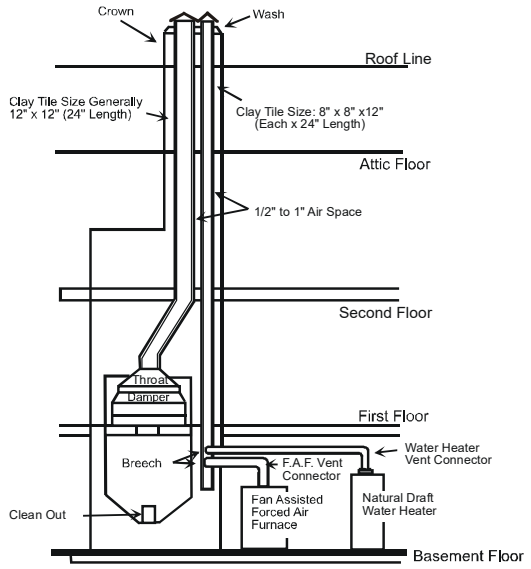

Typical Multiple Flue Clay Tile Chimney
Figure 6

Checklist Summary

This checklist serves as a summary of the items to be checked before venting an 80+ furnace into a masonry chimney. In addition, we recommend that a qualified serviceman use this checklist to perform a yearly inspection of the furnace venting system.

This checklist is only a summary. For detailed information on each of the procedures mentioned, see the paragraph referenced with each item.

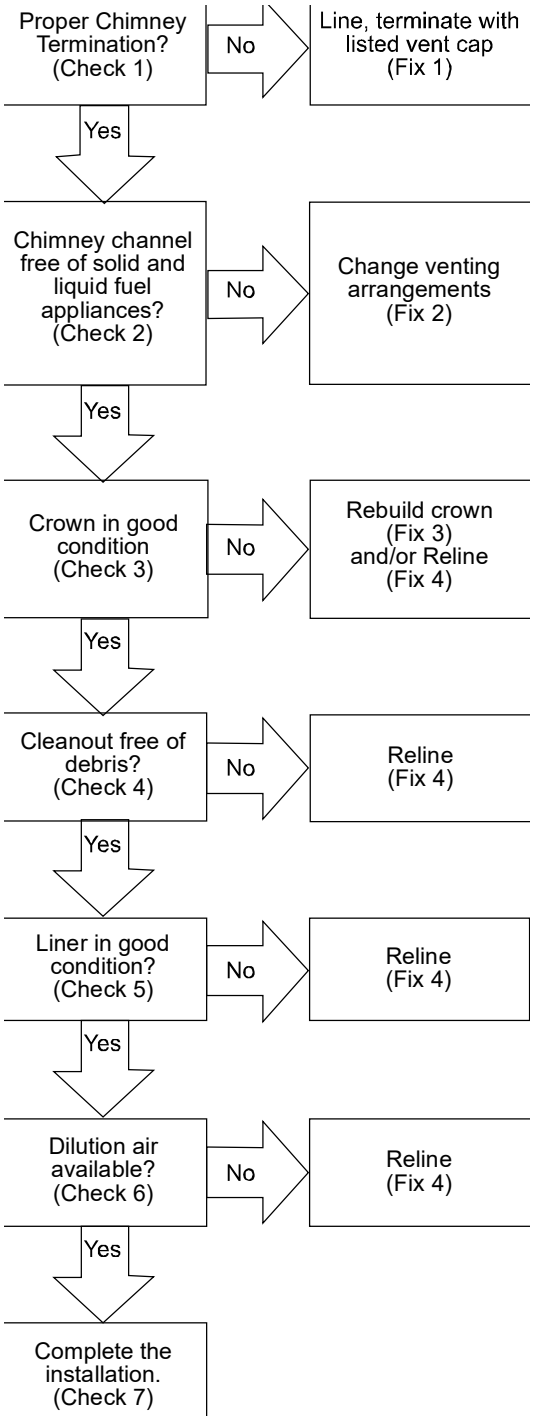

Figure 7

Check 1 - Proper chimney termination

A masonry chimney used as a vent for gas fired equipment must extend at least three feet above the highest point where it passes through the roof. It must extend at least two feet higher than any portion of a building within a horizontal distance of 10 feet. In addition, the chimney must terminate at least 3 feet above any forced air inlet located within 10 feet. The chimney must extend at least five feet above the highest connected equipment draft hood outlet or flue collar.

If the chimney does not meet these termination requirements, but all other requirements in the checklist can be met, it may be possible for a mason to extend the chimney. If this will not be practical, see Fix 1.

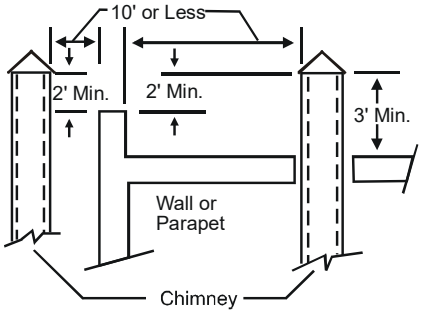

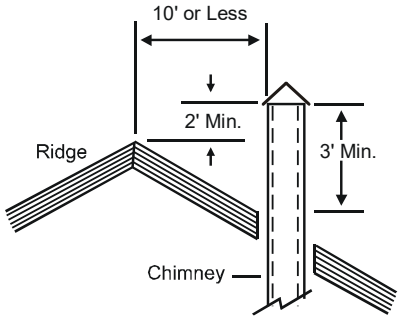

Termination 10 Feet Or Less From Ridge, Wall or Parapet

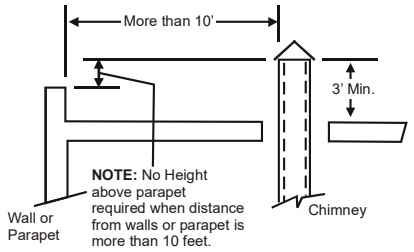

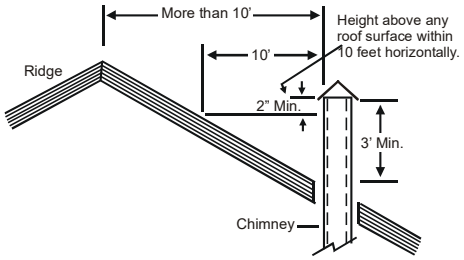

Termination More Than 10 Feet From Ridge, Wall or Parapet
Figure 8

Check 2 - Any solid or liquid fuel appliances vented into this chimney channel

Solid fuel appliances include fireplaces, wood stoves, coal furnaces, and incinerators.

Liquid fuel appliances include oil furnaces, oil-fired boilers and oil-fired water heaters.

Appliances which burn propane (sometimes referred to as LP (liquefied petroleum)) gas are considered gas-fired appliances.

Check 3 - Chimney Crown Condition.

Damage from condensate usually shows up first in the crown. If any of the following trouble signs are present, the condition of the crown is not satisfactory:

a) Crown leaning
b) Bricks missing
c) Mortar missing
d) Tile liner cracked
e) No tile liner
f) Salt staining at mortar joints. (White stains, and mortar becomes sandy and/or erodes.)

For problems a, b, or c, see Fix 3. If problems d, e, or f are present, see Fix 4. IMPORTANT: It may be necessary to follow both Fix 3 and Fix 4.

Check 4 - Debris in Cleanout

A cleanout (dropleg) must be present such that the upper edge of the cleanout cover is at least 12 inches below the lower edge of the lowest chimney inlet opening.

A chimney without a cleanout could become partially blocked by debris. If no cleanout is present, the chimney must be relined (Fix 4). Remove the cleanout cover, and examine the cleanout for debris. If significant amounts of any of the following are found:

- Fuel oil residue
- Bricks
- Mortar or sand
- Pieces of the tile liner
- Rusted pieces of the metallic liner - reline the chimney (Fix 4).

Check 5 - Liner Condition.

If a metal liner is present, it must be checked. It cannot be assumed that all existing metal liners are correctly installed and in good condition.

Remove the lowest existing vent connector, and examine the inside of the elbow or tee at the base of the liner. A small amount of soot may be considered acceptable, provided the installer vacuums it away. If rusted pieces of the liner have collected here, the metal liner must be removed and replaced (Fix 4).

Next, gently tap the inside of the liner with a Phillips screwdriver. If the screwdriver perforates the liner, or if the tapping does not sound like metal hitting metal, the liner must be removed and replaced (Fix 4).

Remember that all appliances must be vented inside the liner. Venting one appliance inside the liner and another appliance outside the liner is not acceptable.

Next, use a flashlight and small mirror to sight up the liner. B vent must be supported so as to not come into direct contact with the chimney walls or tile liner. If it is not, it can probably be rehung so as to be acceptable. A thimble or fire stop may be helpful here.

Flexible liners should be hung straight or nearly straight. If it is spiraled in the chimney and in good condition, it should be rehung. To do this, break the top seal; pull up and cut off the excess liner length, and refit the top seal. Use caution when doing this, as the cut edges of flexible liners may be sharp.

The surfaces of the liner must be physically sound. If gaps or holes are present, the metal liner must be removed and replaced (Fix 4). Finally, confirm that the metal liner is the correct size for the appliances to be installed. Use the GAMA tables and rules.

If a metal liner is not present, a clay tile liner must be present, or the chimney must be lined (Fix 4).

Use a flashlight and small mirror at the cleanout or vent connector to inspect the clay tile liner. If any of the following problems are present:

- Tile sections misaligned
- Tile sections missing
- Gaps between tile sections
- Signs of condensate drainage at the cleanout or vent connectors
- Mortar protruding from between tile sections
- Use of sewer pipe or drainage pipe rather than an approved fire clay tile reline the chimney (Fix 4).

Next, measure the size of the liner. It may be possible to do this from the cleanout. The liner must be at least as large as the minimum size established by the tables in in the latest edition of the National Fuel Gas Code NFPA 54/ANSI Z223.1. If the liner is too small or too large, then the chimney must be relined (Fix 4).

Check 6 - Dilution Air

If gas-fired appliances are to be vented into a clay tile liner, a source of dilution air is required.

Dilution air cannot be obtained through:

- Induced draft appliances
- Natural draft appliances with vent dampers

Sufficient dilution air can ordinarily be obtained through the draft hood of a natural draft appliance only if the appliance's vent connector does not include a vent damper. If dilution air will not be available, the chimney must be relined (Fix 4).

Check 7 - Complete the Installation

If Checks 1 through 6 have been satisfactory, and the liner is an acceptable size as determined by the tables in the latest edition of the National Fuel Gas Code NFPA 54/ANSI Z223.1, then the clay tile liner can probably be used as a vent for the gas appliances. However, the installer must keep in mind the following factors which may render the tile liner unsuitable for use as a vent:

- Extremely cold weather
- Long vent connectors
- Masonry chimneys with no air gap between the liner and the bricks. (In practice, this can be difficult to detect.)
- Exterior chimneys (The tables in National Fuel Gas Code NFPA 54/ANSI Z223.1 - latest edition)

If, in the judgment of the local gas utility, installer, and/or local codes; one or more of the above factors is likely to present a problem, the chimney must be relined (Fix 4).

Fix 1 - Liner Termination

Any cap or roof assembly used with a liner must be approved by the liner manufacturer for such use. The liner and cap/roof assembly must then terminate above the roof in accordance with the manufacturer's instructions.

In some cases, a shorter extension above the roof may be possible with a liner than would be required with a masonry chimney.

For further information on relining, see Fix 4.

Fix 2 -Change Venting Arrangements

If the masonry chimney has more than one channel, it may be possible to vent the gas appliances into one channel and vent the solid or liquid fuel appliance(s) into another channel(s). Do not vent an 80+ Furnace inside of a metal liner with other appliances vented outside the liner.

Alternatively, the homeowner may agree to discontinue use of the fireplace (solid fuel appliance). If so, the tile liner must be cleaned to remove creosote buildup. The fireplace opening must then be permanently sealed.

If oil-fired appliance(s) are being replaced by gas-fired appliance(s), the tile liner must first be cleaned to remove the fuel oil residue.

If none of the above options is practical, the furnace may need to be vented vertically with a B Vent.

Under some conditions, a 90%+ furnace could be installed rather than an 80% furnace. The 90%+ furnace can be vented horizontally or vertically through PVC pipe.

Fix 3 - Rebuild the Crown

If the chimney crown is damaged, a qualified mason must repair it in accordance with nationally recognized building codes or standards. One such standard which may be referenced is the Standard for Chimneys, Fireplaces, Vents, and Solid Fuel Burning Appliances, ANSI/NFPA 211.

Fix 4 - Relining

Relining options include B vent and flexible liners.

If the chimney has diagonal offsets, B vent probably cannot be used.

If B vent is to be used, it must be supported adequately. Supports (such as fire stops or thimbles) must be used to prevent the B vent from coming into direct contact with the tile liner or chimney walls. Direct contact would result in higher heat loss, with an increased possibility of poor venting system performance.

It is not acceptable to vent one appliance inside the B vent and other appliances outside. The excess space between the B vent and the chimney walls must be covered at the top of the chimney by a weatherproof, corrosion resistant flashing.

The B-vent should then be topped with a listed vent cap. The listed vent cap will, when installed per the manufacturer's instructions, prevent problems due to rain, birds, or wind effects.

A B-vent installed as described in this section is considered to be an enclosed vent system, and the sizing tables in in the latest edition of the National Fuel Gas Code NFPA 54/ANSI Z223.1.

If a flexible liner is to be used, it must be made of the proper materials:

- For most residential applications, an aluminum liner should be acceptable.
- If the combustion air supplied to the furnace will be contaminated with compounds containing chlorine or fluorine, a liner of AL 29-4C stainless steel should be used. Common sources of chlorine and fluorine compounds include indoor swimming pools and chlorine bleaches, paint strippers, adhesives, paints, varnishes, sealers, waxes (which are not yet dried) and solvents used during construction and remodeling. Various commercial and industrial processes may also be sources of chlorine/fluorine compounds.
- Heavier gauge 300 and 400 series stainless steel liners were developed for use with oil or solid fuel appliances. They are not suitable for use with gas-fired appliances. Flexible liners specifically intended and tested for gas applications are listed in the UL "Gas and Oil Equipment Directory". (UL Standard 1777).

For sizing of flexible liners, see the tables in the latest edition of the National Fuel Gas Code NFPA 54/ANSI Z223.1.

To install the liner, read and follow the liner manufacturer's instructions and your local codes. Excess liner length should be pulled out of the chimney and cut off. Use caution when doing this, as the cut edges of flexible liners may be sharp. Do not spiral excess liner inside of the chimney. Support the liner as recommended by the liner manufacturer.

Some manufacturers of flexible liners offer an insulation sleeve designed to be added to the liner before it is installed in the chimney. (Poured insulation, either vermiculite or other materials, is no longer recommended.) Insulation will need to be added to the flexible liner if:

- It is required by the liner manufacturer's instructions.
- The previous liner was properly sized and installed, and suffered from condensation damage.
- It is required by your local building codes.

Even if none of those three conditions exist which require additional liner insulation, the installer may wish to consider it if:

- The local climate is very cold.
- The chimney is very tall.
- The vent connectors used are very long or have a large number of elbows.
- Local experience indicates that flexible liners installed without insulation are likely to have condensation problems.

Insulation must be selected and installed in accordance with the liner manufacturer's instructions.

Finally, cap the chimney and terminate the liner in accordance with the liner manufacturer's instructions.

Electrical Connections

WARNING

HIGH VOLTAGE !

To avoid personal injury or death due to electrical shock, disconnect electrical power before servicing or changing any electrical wiring.

CAUTION

Label all wires prior to disconnection when servicing controls. Wiring errors can cause improper and dangerous operation. Verify proper operation after servicing.

WARNING

HIGH VOLTAGE !

To avoid the risk of injury, electrical shock or death, the furnace must be electrically polarized and grounded in accordance with local codes or in their absence, with the latest edition of the National Electric Code.

Wiring Harness

The wiring harness is an integral part of this furnace. Field alteration to comply with electrical codes should not be required. Wires are color coded for identification purposes. Refer to the wiring diagram for wire routings. If any of the original wire as supplied with the furnace must be replaced, it must be replaced with wiring material having a temperature rating of at least 105°C. Any replacement wiring must be a copper conductor.

120 Volt Line Connections

Before proceeding with electrical connections, ensure that the supply voltage, frequency, and phase correspond to that specified on the unit rating plate. Power supply to the furnace must be NEC Class 1, and must comply with all applicable codes. The furnace must be electrically grounded in accordance with local codes or, in their absence, with the atest edition of The National Electric Code, ANSI NFPA 70.

Use a separate fused branch electrical circuit containing properly sized wire, and fuse or circuit breaker. The fuse or circuit breaker must be sized in accordance with the maximum overcurrent protection specified on the unit rating plate. An electrical disconnect must be provided at the furnace location.

Line voltage wiring must enter into the junction box provided with the furnace.

Line polarity must be observed when making field connections. Line voltage connections can be made through either the right or left side panel. To relocate the junction box, follow the steps shown in the Junction Box Relocation section.

Junction Box Relocation

WARNING

Edges of sheet metal holes may be sharp. Use gloves as a precaution when removing hole plugs.

Line voltage connections can be made through either the right or left side panel. The furnace is shipped configured for a right side electrical connection. To make electrical connections through the opposite side of the furnace, the junction box must be relocated to the left side prior to making electrical connections. To relocate the junction box, perform the following steps.

WARNING

To prevent personal injury or death due to electric shock, disconnect electrical power before installing or servicing this unit.

1. Remove both doors from the furnace.
2. Remove and save the screws holding the junction box to the right side of the furnace.
3. Models that have the junction box located in the burner compartment will need to move the junction box directly over.
4. Attach the junction box to the left side of the furnace, using the screws removed in step 2.
5. Check the location of the wiring. Confirm that it will not be damaged by heat from the burners or by the rotation of the fan. Also confirm that wiring location will not interfere with filter removal or other maintenance.

After the junction box is in the desired location, use washers to connect field-supplied conduit to the junction box in accordance with NEC and local codes. Connect hot, neutral, and ground wires as shown in the furnace wiring diagram. The wires and ground screw are located in the furnace junction box.

Low voltage wires may be connected to the terminal strip.

IMPORTANT NOTE: To avoid possible equipment malfunction, route the low voltage wires to avoid interference with filter removal or other maintenance.

WARNING

HIGH VOLTAGE !

To avoid the risk of injury, electrical shock or death, the furnace must be electrically grounded in accordance with local codes or in their absence, with the latest edition of the National Electric Code.

To ensure proper unit grounding, the ground wire should run from the furnace ground screw located inside the furnace junction box all the way back to the electrical panel. **NOTE:** Do not use gas piping as an electrical ground. To confirm proper unit grounding, turn off the electrical power and perform the following check.

1. Measure resistance between the neutral (white) connection and the unpainted surface on the furnace.
2. Resistance should measure 10 ohms or less.

This furnace is equipped with a blower door interlock switch which interrupts unit voltage when the blower door is opened for servicing. Do not defeat this switch.

24 Volt Thermostat Wiring

NOTE: Wire routing must not interfere with circulator blower operation, filter removal, or routine maintenance.

Low voltage connections can be made through either the right or left side panel. Thermostat wiring entrance holes are located in the blower compartment. The following figure shows connections for a “heat only” system and “heat/cool system”.

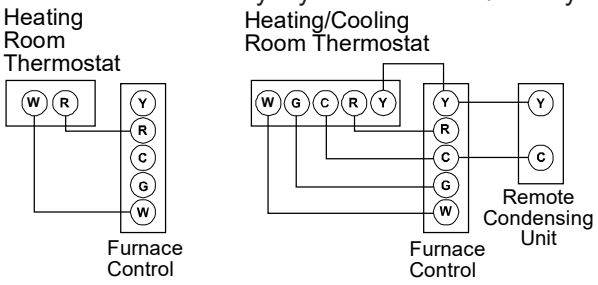

Typical Field Wiring (24 VAC Control Circuit)

Figure 9

This furnace is equipped with a 40 VA transformer to facilitate use with most cooling equipment. Consult the wiring diagram, located on the blower compartment door, for further details of 120 Volt and 24 Volt wiring.

A single-stage thermostat with only one heating stage is needed to control this furnace.

120 Volt Line Connection of Accessories

Humidifier and Electronic Air Cleaner

WARNING

HIGH VOLTAGE !

To avoid personal injury or death due to electrical shock, disconnect electrical power before servicing or changing any electrical wiring.

The furnace integrated control module is equipped with line voltage accessory terminals for controlling power to an optional field-supplied humidifier and/or electronic air cleaner.

The accessory load specifications are as follows:

Electronic Air Cleaner	1.0 Amp maximum at 120 VAC
Humidifier	1.0 Amp maximum at 120 VAC

Table 3

Turn OFF power to the furnace before installing any accessories. Follow the humidifier and/or air cleaner manufacturers' instructions for locating, mounting, grounding, and controlling these accessories. Accessory wiring connections are to be made through the 1/4" quick connect terminals provided on the furnace integrated control module. The humidifier and electronic air cleaner hot terminal is identified as HUM and EAC, the neutral terminal is identified as NEUTRAL. All field wiring must conform to applicable codes. Connections should be made as shown in the following illustration.

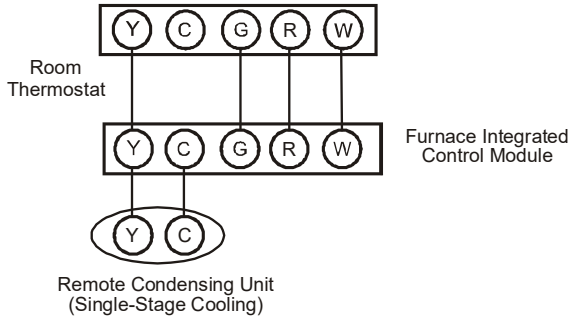

Figure 10

If it is necessary for the installer to supply additional line voltage wiring to the inside of the furnace, the wiring must conform to all local codes, and have a minimum temperature rating of 105°C. All line voltage wire splices must be made inside the furnace junction box.

The integrated control module single humidifier terminal (HUM) is energized with 120 volts whenever the induced draft blower is energized. This terminal can also be used to provide 120 volt power to a humidifier transformer. The remaining primary transformer wire would be connected to the Line N on the control board. The integrated control module electronic air cleaner terminals (EAC) are energized with 120 volts whenever the circulator blower is energized.

NOTE: Wiring routing must not interfere with circulator blower operation, filter removal, or routine maintenance.

Fossil Fuel Applications

This furnace can be used in conjunction with a heat pump in a fossil fuel application. A fossil fuel application refers to a combined gas furnace and heat pump installation which uses an outdoor temperature sensor to determine the most cost efficient means of heating heat pump or gas furnace.

A heat pump thermostat with *two stages of heat* is required to properly use a furnace in conjunction with a heat pump. Refer to the fossil fuel kit installation instructions for additional thermostat requirements.

Strictly follow the wiring guidelines in the fossil fuel kit installation instructions. All furnace connections must be made to the furnace integrated control module and the FURNACE terminal strip on the fossil fuel control board.

Gas Supply and Piping

The furnace rating plate includes the approved furnace gas input rating and gas types. The furnace must be equipped to operate on the type of gas applied.

CAUTION

To prevent unreliable operation or equipment damage, the inlet gas supply pressure must be as specified on the unit rating plate with all other household gas fired appliances operating.

Inlet gas supply pressures must be maintained within the ranges specified in the following table. The supply pressure must be constant and available with all other household gas fired appliances operating. The minimum gas supply pressure must be maintained to prevent unreliable ignition. The maximum must not be exceeded to prevent unit overfiring and damage to gas valve.

NOTE: Do not remove the gas valve inlet plug before the gas line is installed. Replace if water or debris has been introduced.

INLET GAS SUPPLY PRESSURE		
Natural Gas	Minimum: 4.5" w.c.	Maximum: 10.0" w.c.

Table 4

At all altitudes, the manifold pressure must be within 0.2 inches w.c. of that listed in the Specification Sheet applicable to your model for the fuel used. At all altitudes, the air temperature rise must be within the range listed on the furnace nameplate.

High Altitude Derate

IMPORTANT NOTE: The furnace, as shipped, requires no change to run between 0-4500 feet. Do not attempt to change the firing rate by changing orifices or the manifold pressure. This can cause poor combustion and equipment failure.
At all altitudes, the manifold pressure must be within 0.2 inches w.c. of that listed on the furnace nameplate. At all altitudes the air temperature rise must be within the range listed on the the Specification Sheet applicable to your model for the fuel used.

Altitude	Gas	Kit	Manifold Pressure	Pressure Sensor
0 - 4500	Natural	None	3.0" w.c.	None

Table 5

Gas Piping Connections

WARNING

To avoid possible unsatisfactory operation or equipment damage due to underfiring of equipment, use the proper size of natural gas piping needed when running pipe from the meter to the furnace.

When sizing gas lines, be sure to include all appliances on the same gas supply line and which will operate simultaneously.

The gas piping supplying the furnace must be properly sized based on the gas flow required, specific gravity of the gas, and length of the run. The gas line installation must comply with local codes, or in their absence, with the latest edition of the National Fuel Gas Code, NFPA 54/ANSI Z223.1.

Natural Gas Capacity of Pipe
In Cubic Feet of Gas Per Hour (CFH)

Length of Pipe in Feet	Nominal Black Pipe Size				
	1/2"	3/4"	1"	1 1/4"	1 1/2"
10	132	278	520	1050	1600
20	92	190	350	730	1100
30	73	152	285	590	980
40	63	130	245	500	760
50	56	115	215	440	670
60	50	105	195	400	610
70	46	96	180	370	560
80	43	90	170	350	530
90	40	84	160	320	490
100	38	79	150	305	460

(Pressure 0.5 psig or less and pressure drop of 0.3" W.C.; Based on 0.60 Specific Gravity Gas)

$$\text{CFH} = \frac{\text{BTUH Furnace Input}}{\text{Heating Value of Gas (BTU/Cubic Foot)}}$$

Table 6

To connect the furnace to the building's gas piping, the installer must supply a ground joint union, drip leg, manual shutoff valve, and line and fittings to connect to gas valve. In some cases, the installer may also need to supply a transition piece from 1/2" pipe to a larger pipe size.

The following stipulations apply when connecting gas piping.

- Gas piping must be supported external to the furnace cabinet so that the weight of the gas line does not distort the burner rack, manifold or gas valve.
- Use black iron or steel pipe and fittings for the building piping. Where possible, use new pipe that is properly chamfered, reamed, and free of burrs and chips. If old pipe is used, be sure it is clean and free of rust, scale, burrs, chips, and old pipe joint compound.
- Use pipe joint compound on male threads ONLY. Always use pipe joint compound (pipe dope) that is APPROVED FOR ALL GASSES. DO NOT apply compound to the first two threads.
- Use ground joint unions.
- Install a drip leg to trap dirt and moisture before it can enter the gas valve. The drip leg must be a minimum of three inches long.
- Install a 1/8" NPT pipe plug fitting, accessible for test gage connection, immediately upstream of the gas supply connection to the furnace.
- Always use a back-up wrench when making the connection to the gas valve to keep it from turning. The orientation of the gas valve connection is 374 in-lbs; excessive over-tightening may damage the gas valve and/or gas manifold assembly.
- Install a manual shutoff valve between the gas meter and unit within six feet of the unit. If a union is installed, the union must be downstream of the manual shutoff valve, between the shutoff valve and the furnace.
- Tighten all joints securely.
- Protect connectors and semi-rigid tubing against physical and thermal damage when installed. Ensure aluminum-alloy tubing and connectors are coated to protect against external corrosion when in contact with masonry, plaster, or insulation, or subjected to repeated wetting by liquids such as water (except rain water), detergents, or sewage. The gas piping may enter the left or right side of the furnace cabinet. The installer must supply rigid pipe long enough to reach the outside of the cabinet to seal the grommet cabinet penetration. A semi-rigid connector to the gas piping can be used outside the cabinet per local codes. 1/2" NPT pipe and fittings are required. Model requires one 90 deg elbow, one 2" nipple and additional nipple to reach outside the cabinet. A semi-rigid connector to the gas piping can be used outside the cabinet per local codes. From the elbow, the length of pipe and the fittings required will vary by the side chosen, location of union and cabinet width. The union may be placed inside or outside of the cabinet.

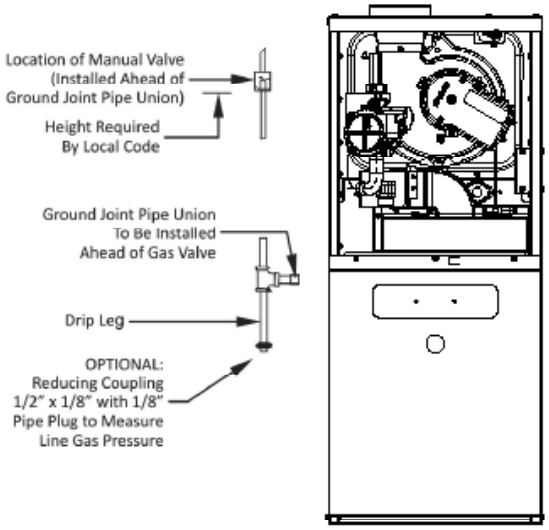

General Furnace Layout
Figure 11

Upflow Installations

A ground joint union, drip leg, and manual shutoff valve must also be supplied by the installer. In some cases, the installer may also need to supply a transition piece from 1/2" to another pipe size.

When the gas piping enters through the side of the furnace, the installer must supply the following fittings (starting from the gas valve nipple elbow):

- Straight pipe to reach the exterior of the furnace.
- A ground joint union, drip leg, and manual shutoff valve must also be supplied by the installer.

Gas Piping Checks

Before placing unit in operation, leak test the unit and gas connections.

WARNING

To avoid the possibility of explosion or fire, never use a match or open flame to test for leaks.

Check for leaks using an approved chloride-free soap and water solution, an electronic combustible gas detector, or other approved testing methods.

CAUTION

To prevent property damage or personal injury due to fire, the following instructions must be performed regarding gas connections, pressure testing, location of shutoff valve and installation of gas piping.

NOTE: Never exceed specified pressures for testing. Higher pressure may damage the gas valve and cause subsequent overfiring, resulting in heat exchanger failure.

Disconnect this unit and shutoff valve from the gas supply piping system before pressure testing the supply piping system with pressures in excess of 1/2 psig (3.48 kPa).

This unit must be isolated from the gas supply system by closing its manual shutoff valve before pressure testing of gas supply piping system with test pressures equal to or less than 1/2 psig (3.48 kPa).

WARNING

If the gas furnace is installed in a basement, an excavated area or confined space, it is strongly recommended to contact a certified contractor to install a gas detecting warning device in case of a gas leak.

Circulating Air and Filters

Ductwork - Air Flow

WARNING

Never allow the products of combustion, including carbon monoxide, to enter the return duct work or circulation air supply.

Duct systems and register sizes must be properly designed for the CFM and external static pressure rating of the furnace. Ductwork should be designed in accordance with the recommended methods of "Air Conditioning Contractors of America" Manual D.

A duct system must be installed in accordance with Standards of the National Board of Fire Underwriters for the Installation of Air Conditioning, Warm Air Heating and Ventilating Systems. Pamphlets No. 90A and 90B.

A closed return duct system must be used, with the return duct connected to the furnace. **NOTE:** Ductwork must never be attached to the back of the furnace. For installations requiring more than 1800 CFM, use a bottom return or two sided return. Supply and return connections to the furnace may be made with flexible joints to reduce noise transmission. To prevent the blower from interfering with combustion air or draft when a central return is used, a connecting duct must be installed between the unit and the utility room wall. Furnace is shipped with the top flanges in the flat position. Before installing a coil or ducts, the flanges must be bent 90°. A room, closet, or alcove must not be used as a return air chamber.

When the furnace is used in connection with a cooling unit, the furnace should be installed in parallel with or on the upstream side of the cooling unit to avoid condensation in the heating element. With a parallel flow arrangement, the dampers or other means used to control the flow of air must be adequate to prevent chilled air from entering the furnace and, if manually operated, must be equipped with means to prevent operation of either unit unless the damper is in the full heat or cool position.

Damper must be in open position when appliance main burner is operating.

When the furnace is installed without a cooling coil, it is recommended that a removable access panel be provided in the outlet air duct. This opening shall be accessible when the furnace is installed and shall be of such a size that the heat exchanger can be viewed for visual light inspection or such that a sampling probe can be inserted into the airstream. The access panel must be made to prevent air leaks when the furnace is in operation.

NOTE: In a horizontal installation the air conditioning coil must be adequately supported by proper brackets and supports. Inadequate coil support can result in furnace cabinet distortion and air leakage.

When the furnace is heating, the temperature of the return air entering the furnace must be between 55°F and 100°F.

When a furnace is installed so that supply ducts carry air circulated by the furnace to areas outside the space containing the furnace, the return air shall also be handled by a duct sealed to the furnace casing and terminating outside the space containing the furnace.

WARNING

EDGES OF SHEET METAL HOLES MAY BE SHARP. USE GLOVES AS A PRECAUTION WHEN REMOVING SHEET METAL FROM RETURN AIR OPENINGS.

FILTERS-READ THIS SECTION BEFORE INSTALLING THE RETURN AIR DUCTWORK

Filters must be used with this furnace. Discuss filter maintenance with the building owner. Filters do not ship with this furnace, but must be provided by the installer. Filters must comply with UL900 or CAN/ULCS111 standards. Damage or repairs due to failure to install filters in the furnace are not covered under the warranty.

NOTE: An undersized opening will cause reduced airflow. Refer to the Filter Sizing Chart to determine filter area requirements.

UPRIGHT INSTALLATIONS

Depending on the installation and/or customer preference, differing filter arrangements can be applied. Filters can be installed in the central return register or a side panel external filter rack kit (upflows). As an alternative, a media air filter or electronic air cleaner can be used as the primary filter. The following figure shows possible filter locations.

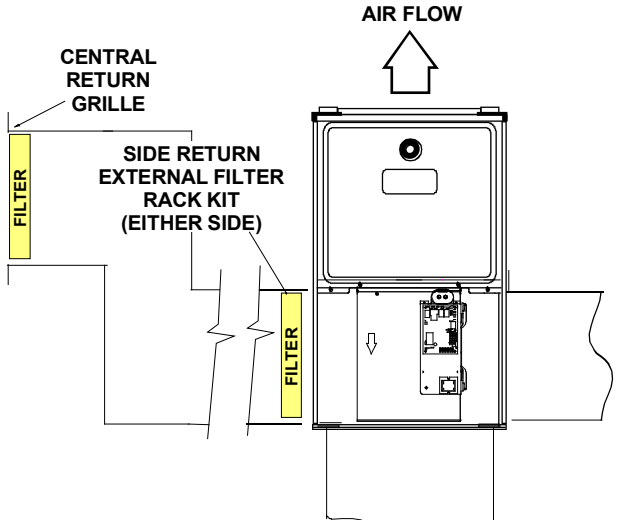

Upright Upflow
Figure 12

CIRCULATION AIR FILTERS

One of the most common causes of a problem in a forced air heating system is a blocked or dirty filter. Circulating air filters must be inspected monthly for dirt accumulation and replaced if necessary. Failure to maintain clean filters can cause premature heat exchanger failure.

A new home may require more frequent replacement until all construction dust and dirt is removed. Circulating air filters are to be installed in the return air duct external to the furnace cabinet.

Upflow / Horizontal Models	Minimum Recommended Filter Size^
DM80SE0403AU	1 - 16 X 25 Side or 1 -14 X 24 Bottom Return
DM80SE0603AU	1 - 16 X 25 Side or 1 -14 X 24 Bottom Return
DM80SE0604BU	1 - 16 X 25 Side or Bottom Return
DM80SE0804BU	1 - 16 X 25 Side or Bottom Return
DM80SE0805CU	2 - 16 X 25 Side Return, 1 - 20 X 25 Bottom Return

^Larger filters may be used, filters may also be centrally located

Table 7

Consider installing an air cleaner with deep-pleated media filter at the time of furnace installation. A deep-pleated filter with a MERV rating of 8 (minimum) will often provide better filtration to protect equipment and the air distribution system than a standard 1” filter and often has lower static pressure loss than a 1” filter. Also a deep-pleated filter will typically require less frequent replacement intervals. Avoid using highly restrictive 1” filters which produce static pressure loss greater than .25” W.C. In some installations the minimum filter size required (consult filter sizing chart) will not lend itself to a filter installation on the side of the furnace. The installation of a centrally installed air cleaner cabinet or a return duct filter installation may offer more practicality.

Clean Comfort™ brand MERV 11 air cleaners have 5¼” media filters and are available in the following configurations. Consult your distributor for information on our complete line of IAQ Clean Comfort™ products.

Air cleaner installation location	Maximum Heating Airflow	Filter (Media) Dimensions	Part Number	Air Cleaner Family
Side or bottom return	1200 CFM	16 in X 20 in x 5¼"	AM11-1620-5	AM11-5
Side or bottom return	1600 CFM	16 in X 25 in x 5¼"	AM11-1625-5	
Side or bottom return	1600 CFM	20 in X 20 in x 5¼"	AM11-2020-5	
Side or bottom return	2000 CFM	20 in X 25 in x 5¼"	AM11-2025-5	
Side return (for 2 separate returns)	2 X 1600 CFM	2, 16 in X 25 in x 5¼"	AM11-3225-5	AM11-3225
Side return (Right angle)	2000 CFM	20 in X 25 in x 5¼"	AM11-2025-5RA	AM11-5RA
Bottom return (platform)	2000 CFM	20 in X 25 in x 5¼"	AM11-2832-5PP	AM11-5PP
Bottom return (platform)	2000 CFM	20 in X 25 in x 5¼"	AM11-2843-5PP	

AM11-5 Family	AM11-5RA Family	AM11-5PP Family

Table 8

Horizontal Installations

Filters must be installed in either the central return register or in the return air duct work.

Normal Sequence of Operation

Power Up

- 120 VAC power applied to furnace.
- Integrated ignition control performs internal checks.
- LED light will flash once at power up and then remain on.
- Integrated ignition control monitors safety circuits continuously.
- Furnace awaits call from thermostat.

Heating Mode

The normal operational sequence in heating mode is as follows:

- R and W thermostat contacts close, initiating a call for heat.
- Integrated control module performs safety circuit checks.
- Induced draft blower is energized for 30 second pre-purge period causing pressure sensor contacts to close.
- Igniter warm up begins after 30 second prepurge expires.
- Gas valves open at end of igniter warm up period, delivering gas to burners and establishing flame.
- Integrated control module monitors flame presence. Gas valve will remain open only if flame is detected.

- Circulator blower is energized on high heat speed following a fixed five second blower on delay. Electronic air cleaner terminals are energized with circulator blower.
- Furnace operates; integrated control module monitors safety circuits continuously.
- R and W thermostat contacts open, completing the call for heat.
- Gas valve closes, extinguishing flame.
- Induced draft blower is de-energized following a thirty second post purge.
- HUM terminal is de-energized.
- Circulator blower continues running for selected heat off delay period factory set at 150 seconds. If required this can be changed in the field.
- Electronic air cleaner is de-energized.
- Furnace awaits the next call from thermostat.

Cooling Mode

The normal operational sequence in cooling mode is as follows:

- R, Y and G thermostat contacts close, initiating a call for cool.
- Integrated control module performs safety circuit checks.
- Outdoor fan and compressor are energized.
- Circulator blower is energized on cool speed following a fixed six second on delay. If required this can be changed in the field too 45 seconds. Electronic air cleaner terminals are energized with circulator blower.
- Furnace circulator blower and outdoor cooling unit run, integrated control module monitors safety circuits continuously.
- R, Y and G thermostat contacts open, completing the call for cool.
- Outdoor fan and compressor are de-energized.
- Circulator blower is de-energized following a fixed forty five second cool off delay period. Electronic air cleaner terminals are de-energized.
- Furnace awaits the next call from thermostat.

Fan Only Mode

The normal operational sequence in fan only mode is as follows:

- R and G thermostat contacts close, initiating a call for fan.
- Integrated control module performs safety circuit checks.
- Circulator blower is energized on low heat speed. Electronic air cleaner terminals are energized.
- Circulator blower runs, integrated control module monitors safety circuits continuously.
- R and G thermostat contacts open, completing the call for fan.
- Circulator blower is de-energized. Electronic air cleaner terminals are de-energized.
- Furnace awaits the next call from thermostat.

Start-up Procedure And Adjustment

Furnace must have a 120 VAC power supply properly connected and grounded. Proper polarity must be maintained for correct operation. An interlock switch prevents furnace operation if the blower door is not in place. Keep the blower access door in place except for inspection and maintenance.

This furnace is also equipped with a self-diagnosing electronic control module. In the event a furnace component is not operating properly, the control module LED will flash on and off in a factory-programmed sequence, depending on the problem encountered. This light can be viewed through the observation window in the blower access door. Refer to the *Troubleshooting Chart* for further explanation of the fault codes.

Furnace operation

Purge gas lines of air prior to start-up. Do not purge lines into an enclosed burner compartment. Follow NFPA 54, National Fuel Gas Code 8.1 for proper purging methods.

Check for leaks using an approved chloride-free soap and water solution, an electronic combustible gas detector, or other approved method.

NOTE: An interlock switch prevents furnace operation if the blower door is not in place. Keep the blower access doors in place except for inspection and maintenance.

Furnace Start-up

1. Close the manual gas shutoff valve external to the furnace.
2. Turn off the electrical power to the furnace.
3. Set the room thermostat to the lowest possible setting.
4. Remove the burner compartment door.

NOTE: This furnace is equipped with an ignition device which automatically lights the burner. Do not try to light the burner by hand.

5. *White-Rodgers valves:* Push the switch to the OFF position.
6. Wait five minutes then smell for gas. Be sure to check near the floor, as some types of gas are heavier than air.
7. If gas can be smelled following the five minute waiting period in Step 6, immediately follow the instructions on Page 3 of this manual. If you do not smell gas after five minutes:

   White-Rodgers valves: Push the switch to the ON position.
8. Replace the door on the front of the furnace.

9. Open the manual gas valve external to the furnace.
10. Turn on the electrical power supply to the furnace.
11. Adjust the thermostat to a setting above room temperature.
12. After the burners are lit, set the room thermostat to the desired temperature.

NOTE: There will be a delay between thermostat energizing and burner firing.

Furnace Shutdown

1. Set the thermostat to lowest setting. The integrated control will close the gas valve and extinguish flame. Following a 30 second delay, the induced draft blower will be de-energized. The circulation blower will shut down when the time delay expires. Time delay is selectable on all models.
2. Turn off the electrical power supply to the furnace.
3. Remove the burner compartment door.
4. *White-Rodgers valve:* Push switch to the OFF position.
5. Close manual gas shutoff valve external to the furnace.
6. Replace the door on the unit.

Gas Supply Pressure Measurement

CAUTION

To prevent unreliable operation or equipment damage, the inlet gas supply pressure must be as specified on the unit rating plate with all other household gas fired appliances operating.

The line pressure supplied to the gas valve must be within the range specified on Table 9. The supply pressure can be measured at the gas valve inlet pressure tap or at a hose fitting installed in the gas piping drip leg. The supply pressure must be measured with the unit OFF. To measure inlet pressure, use the following procedure.

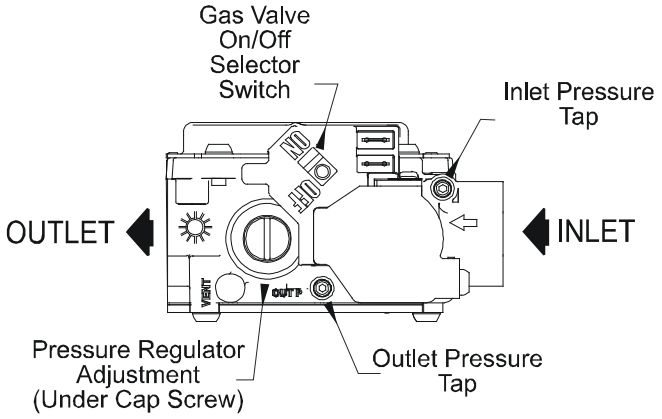

White-Rodgers Model 36J22Y-204

Figure 13

1. Turn OFF gas to furnace at the manual gas shutoff valve external to the furnace.
2. Turn OFF all electrical power to the system.
3. Inlet pressure tap connections:
   a. White-Rodgers valve:
      Back inlet pressure test screw (inlet pressure tap out one turn (counterclockwise, not more than one turn).
4. Connect calibrated U tube manometer (or appropriate pressure gauge) at either the gas valve inlet pressure tap or the gas piping drip leg. See White-Rodgers 36J22Y-204 gas valve Figure 13 for location of inlet pressure tap.
5. Turn ON the gas supply.
6. Turn On power and operate the furnace and all other gas consuming appliances on the same gas supply line.
7. Using a leak detection solution or soap suds, check for leaks at screw (White-Rodgers valve). Bubbles forming indicate a leak. SHUT OFF GAS AND REPAIR ALL LEAKS IMMEDIATELY!
8. Measure the gas supply pressure with burners firing. Adjust supply pressure using the *Inlet Gas Supply Pressure* table shown below. If supply pressure reading differs from the table, make necessary adjustments to pressure regulator, gas piping size, etc., and/or consult with local gas utility.

INLET GAS SUPPLY PRESSURE		
Natural Gas	Minimum: 4.5" w.c.	Maximum: 10.0" w.c.

Table 9

9. Turn OFF all electrical power and gas supply to the system.
10. Remove the manometer hose from the hose barb fitting or inlet pressure Tap.
11. Replace inlet pressure tap:
    a. White-Rodgers valve:
       Turn inlet pressure test screw in to seal pressure port (clockwise, 7 in-lb minimum).
12. Retest for leaks. If bubbles form, shut down gas and repair leaks immediately.
13. If there are no leaks, turn ON electrical power and gas supply to the system.
14. Turn valve switch ON.

NOTE: If measuring gas pressure at the drip leg, a field-supplied hose barb fitting must be installed prior to making the hose connection. If using the inlet pressure Tap on the White-Rodgers gas valve, then use the 36G/J Valve Pressure Check Kit, Daikin Part No. 0151K00000S.

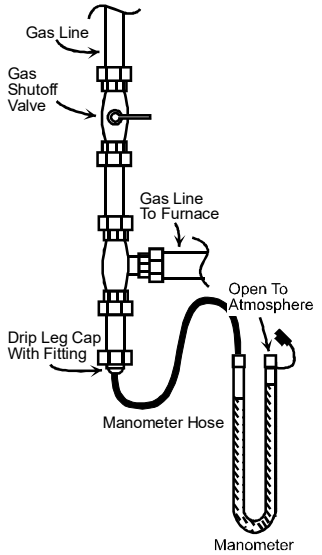

Measuring Inlet Gas Pressure (Alt. Method)

Figure 14

Gas Manifold Pressure Measurement and Adjustment

CAUTION

To prevent unreliable operation or equipment damage, the gas manifold pressure must be as specified on the unit rating plate. Only minor adjustments should be made by adjusting the gas valve pressure regulator.

Only small variations in gas pressure should be made by adjusting the gas valve pressure regulator. The manifold pressure must be measured with the burners operating. To measure and adjust the manifold pressure, use the following procedure.

1. Turn OFF gas to furnace at the manual gas shutoff valve external to the furnace.
2. Turn OFF all electrical power to the system.
3. Outlet pressure tap connections:
   a. White-Rodgers valve:
      Back outlet pressure test screw (outlet pressure Tap) out one turn (counterclockwise, not more than one turn).
4. Connect calibrated U tube manometer (or appropriate pressure gauge) at the gas valve outlet pressure tap. See White-Rodgers 36J22Y-204 gas valve Figure 13 for location of outlet pressure tap.
5. Turn ON the gas supply.
6. Turn ON power and close thermostat “R” and “W” contacts to provide a call for heat.
7. Using a leak detection solution or soap suds, check for leaks at outlet pressure Tap screw (White-Rodgers valve). Bubbles forming indicate a leak. SHUT OFF GAS AND REPAIR ALL LEAKS IMMEDIATELY!
8. Measure the gas manifold pressure with burners firing. Adjust manifold pressure using the following *Manifold Gas Pressure* table.

Manifold Gas Pressure	
Natural Gas	2.8" - 3.2" w.c.

Table 10

9. Remove regulator cover screw from the outlet pressure regulator and turn screw clockwise to increase pressure or counterclockwise to decrease pressure. Replace regulator cover screw.
10. Turn OFF all electrical power and gas supply to the system.
11. Remove the manometer hose from the hose barb fitting or outlet pressure Tap.
12. Replace outlet pressure tap:
    a. White-Rodgers valve: Turn outlet pressure test screw in to seal pressure port (clockwise, 7 in-lb minimum).
13. Turn ON electrical power and gas supply to the system.
14. Close thermostat contacts to provide a call for heat.
15. Retest for leaks. If bubbles form, SHUT OFF GAS AND REPAIR ALL LEAKS IMMEDIATELY!

Gas Input Rate Measurement (Natural Gas Only)

The gas input rate to the furnace must never be greater than that specified on the unit rating plate. To measure natural gas input using the gas meter, use the following procedure.

1. Turn OFF the gas supply to all other gas-burning appliances except the furnace.
2. While the furnace is operating at high fire rate, time and record one complete revolution of the gas meter dial, measuring the smallest quantity, usually the dial that indicates 1/2 cu. ft. per revolution. You will use this number to calculate the quantity of gas in cubic ft. if the furnace would consume if it ran steadily for one hour (3600 seconds).
3. If the 1/2 cu. ft. dial was used, multiply your number X 2. EXAMPLE: If it took 23 seconds to complete one revolution of the 1/2 ft. dial (23 x 2 = 46).
   This tells us that at this rate, it would take 46 seconds to consume one cu. ft. of gas. This tells us that in one hour, the furnace would consume 78 cu. ft. of gas. (3600/46 = 78) The typical value range for 1 cu. ft. of natural gas is around 1025 BTU. Check with your gas utility, if possible. In this example, the furnace is consuming 80,000 BTUH. **NOTE:** The final manifold pressure cannot vary by more than ± 0.2” w.c. for Natural from the specified setting. Consult your local gas supplier if additional input rate adjustment is required.
4. Turn ON gas and relight appliances turned off in step 1. Ensure all the appliances are functioning properly and that all pilot burners (if applicable) are operating.

Temperature Rise

Air temperature rise is the temperature difference between supply and return air. The proper amount of temperature rise is usually obtained when the unit is operated at the rated input with the "as shipped" blower speed. If the correct amount of temperature rise is not obtained, it may be necessary to change the blower speed.

Temperature rise must be within the range specified on the unit rating plate. An incorrect temperature rise may result in condensing in or overheating of the heat exchanger. An airflow and temperature rise table is provided in the Specification Sheet applicable to your model. Determine and adjust temperature rise as follows:

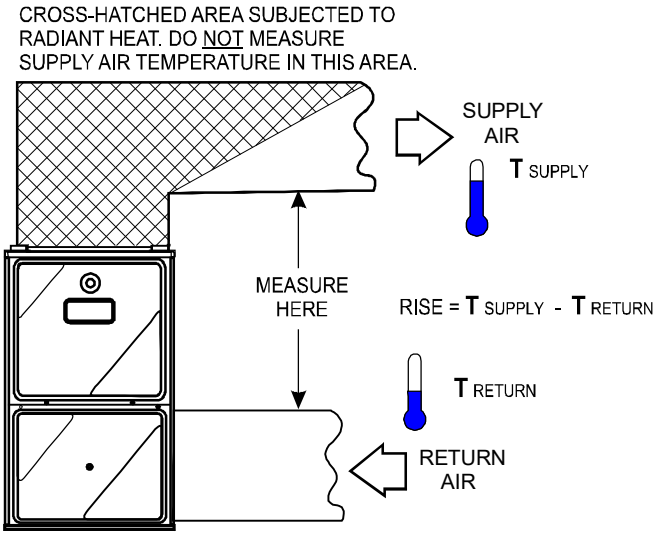

Temperature Rise Measurement

Figure 15

1. Operate furnace with burners firing approximately 15 minutes. Ensure all registers are open and all duct dampers are in their final (fully or partially open) position.
2. Place thermometers in the return and supply ducts as close to the furnace as possible. Thermometers must not be influenced by radiant heat by being able to "see" the heat exchanger.
3. Subtract the return air temperature from the supply air temperature to determine the air temperature rise. Allow adequate time for thermometer readings to stabilize.
4. Adjust temperature rise by adjusting the circulator blower speed. Increase blower speed to reduce temperature rise. Decrease blower speed to increase temperature rise. Refer to the following section for speed changing details.

Circulator Blower Speed Adjustment

WARNING

To avoid personal injury or death due to electrical shock, turn OFF power to the furnace before changing speed taps.

This furnace is equipped with a multi-speed circulator blower. This blower provides ease in adjusting blower speeds. The Specification Sheet applicable to your model provides an airflow table, showing the relationship between airflow (CFM) and external static pressure (E.S.P.), for the proper selection of heating and cooling speeds.

1. Determine the tonnage of the cooling system installed with the furnace. If the cooling capacity is in BTU/hr divide it by 12,000 to convert capacity to tons.

   Example: Cooling Capacity of 30,000 BTU/hr.
   30,000/12,000 = 2.5 Tons
2. Determine the proper air flow for the cooling system. Most cooling systems are designed to work with air volume between 350 and 450 CFM per ton. Most manufacturers recommend an air flow of about 400 CFM per ton.

   Example: 2.5 tons X 400 CFM per ton = 1000 CFM
3. Select the heating speed for your model from the heating speed chart in the Specification Sheet. The selected speed must provide a temperature rise within the rise range listed with the particular model.

To adjust the circulator blower speed, proceed as follows:

1. Turn OFF power to the furnace.
2. Select the heating and cooling blower speeds that match the installation requirements from the airflow table in the Specification Sheet applicable to your model. (Please *contact your distributor or our website for the applicable Specification Sheet referred to in this manual.)*
3. Relocate desired motor leads to the circulator blower heat and cool speed terminals on the integrated control module. (Terminals are identified as HEAT and COOL) If a heating speed and the cooling speed are the same, a jumper wire must be used between the heat and cool terminals.
4. Connect all unused blower motor leads to the "PARK" terminals on the integrated control module. Any leads not connected to the "PARK" terminals must be taped.
5. Turn ON power to furnace.
6. Verify proper temperature rise as outlined in *Temperature Rise section*. In general lower heating speeds will: reduce electrical consumption, lower operating sound levels of the blower, and increase the outlet air temperature delivered to the home. The speeds available allow the blower performance to be optimized for the particular homeowner's needs.

Circulator Blower Fan Timing Adjustment

NOTE: Items in this section refer to the **air circulator blower fan**, NOT to the induced draft blower. The induced draft blower timing sequence is not adjustable.

The integrated control module on all models provides a selectable heat off delay function. The delay is factory shipped at 150 seconds but may be changed to suit the installation requirements and/or homeowner preference. Other timings available are 90, 120 and 180 seconds. Heat cycle jumper settings on the integrated control board are A, B, and D respectively.

Operational Checks

WARNING

To avoid personal injury or death, do not remove any internal compartment covers or attempt any adjustment. Electrical components are contained in both compartments. Contact a qualified service agent at once if an abnormal operation should develop.

Checking Duct Static

Refer to your furnace rating plate for the maximum ESP (external duct static) rating.

Total external static refers to everything external to the furnace cabinet. Cooling coils, filters, ducts, grilles, registers must all be considered when reading your total external static pressure. The supply duct pressure must be read between the furnace and the cooling coil. This reading is usually taken by removing the “A” shaped block off plate from the end on the coil; drilling a test hole in it and reinstalling the block off plate. Take a duct static reading at the test hole. Tape up the test hole after your test is complete. The negative pressure must be read between the filter and the furnace blower.

Too much external static pressure will result in insufficient air that can cause excessive temperature rise. This can cause limit switch tripping and heat exchanger failure.

To determine total external duct static pressure, proceed as follows;

1. With clean filters in the furnace, use a draft gauge (inclined manometer) to measure the static pressure of the return duct at the inlet of the furnace. (Negative Pressure)
2. Measure the static pressure of the supply duct. (Positive Pressure)
3. The difference between the two numbers is .4” w.c.

   Example:
   static reading from return duct = -.1” w.c.
   static reading from supply duct = .3” w.c.
   total external static pressure on this system = .4” w.c.

NOTE: Both readings may be taken simultaneously and read directly on the manometer if so desired. If an air conditioner coil or Electronic Air Cleaner is used in conjunction with the furnace, the readings must also include theses components, as shown in the following drawing.

4. Consult proper tables for the quantity of air.

If the total external static pressure exceeds the maximum listed on the furnace rating plate, check for closed dampers, registers, undersized and/or oversized poorly laid out duct work. The temperature rise of the furnace must be within the temperature rise range listed on the furnace rating plate.

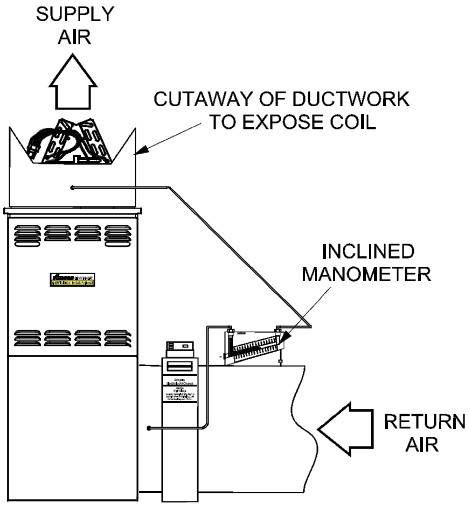

Checking Static Pressure
(80% Furnace Shown)
Figure 16

Safety Circuit Description

General

WARNING

To avoid personal injury or death, do not remove any internal compartment covers or attempt any adjustment. Electrical components are contained in both compartments. Contact a qualified service agent at once if an abnormal operation should develop.

A number of safety circuits are employed to ensure safe and proper furnace operation. These circuits serve to control any potential safety hazards and serve as inputs in the monitoring and diagnosis of abnormal function. These circuits are continuously monitored during furnace operation by the integrated control module.

Integrated Control Module

The integrated control module is an electronic device which controls all furnace operations. Responding to the thermostat, the module initiates and controls normal furnace operation, and monitors and addresses all safety circuits. If a potential safety concern is detected, the module will take the necessary precautions and provide diagnostic information through an LED.

Primary Limit

The primary limit control is located on the partition panel and monitors heat exchanger compartment temperatures. It is a normally closed (electrically), automatic reset, temperature activated sensor. The limit guards against the overheating resulting from insufficient air passing over the heat exchanger.

Auxiliary Limit

The auxiliary limit control is located either on or near the circulator blower and monitors heat exchanger compartment temperatures. The control is a normally closed (electrically), automatic reset, temperature activated sensor. It guards against overheating resulting from insufficient air passing over the heat exchanger. The auxiliary limit control is suitable for both horizontal right and horizontal left installations. Regardless of airflow direction, it does not need to be relocated.

Burner Temperature Switch

The burner temperature switch is mounted on the burner assembly to monitor the burner box temperature. It is normally closed (electrically), auto-reset sensor. This switch guards agianst the burner flames not being properly drawn into the heat exchanger.

Pressure Sensor

The pressure sensor is mounted near induced draft blower. Its function is to regulate the induced draft blower's speed in order to maintain proper air-fuel ratio for clean and reliable combustion. The pressure sensor also guards agianst insufficient airflow (combustion air and flue products) through the heat exchanger.

Flame Sensor

The flame sensor is a probe mounted near the burner assembly which uses the principle of flame rectification to determine the presence or absence of flame.

Troubleshooting

Diagnostic Chart

Refer to the troubleshooting chart in the Appendix for assistance in determining the source of unit operational problems. The red diagnostic LED blinks to assist in troubleshooting the unit. The number of blinks refer to a specific code.
NOTE: To clear all alarm codes, depress the push button for 5 -10 seconds.

Fault Code Retrieval

The ignition control is equipped with a momentary push button that can be used to display on the diagnostic LED the last five faults detected by the control. The control must be in Standby Mode (no thermostat inputs) to use the feature. Depress and release the SW1 button for less than 5 seconds. The diagnostic LED will then display the flash codes associated with the last five detected faults. The order of display is the most recent fault to the least recent fault.

Clear Fault Memory

The push button (SW1) on the ignition control can be used to erase the fault code as well. The control must be in Standby Mode (no thermostat inputs) to use the feature. Press and hold SW1 button for more than 5 secs, but less than 10 secs and the control will erase the stored fault code history. LED will display rapid green flash to indicate the fault history has been cleared.

Resetting From Lockout

Furnace lockout results when a furnace is unable to achieve ignition after three attempts. It is characterized by a non-functioning furnace and a fault code will be displayed . If the furnace is in "lockout", it will (or can be) reset in any of the following ways.

1. Automatic reset. The integrated control module will automatically reset itself and attempt to resume normal operations following a one hour lockout period.
2. Manual power interruption. Interrupt 120 volt power to the furnace.
3. Manual thermostat cycle. Lower the thermostat so that there is no longer a call for heat for 1 - 20 seconds then reset to previous setting.

NOTE: If the condition which originally caused the lockout still exists, the control will return to lockout. Refer to the Diagnostic Chart for aid in determining the cause.

Maintenance

WARNING

To avoid electrical shock, injury or death, disconnect electrical power before performing any service or maintenance. Only qualified servicer should service or perform maintenance

Annual inspection

The furnace should be inspected by a qualified installer, or service agency at least once per year. This check should be performed at the beginning of the heating season. This will ensure that all furnace components are in proper working order and that the heating system functions appropriately. Pay particular attention to the following items. Repair or service as necessary.

- Flue pipe system: Check for blockage and/or leakage. Check the outside termination and the connections at and internal to the furnace.
- Heat exchanger: Check for corrosion and/or buildup within the heat exchanger passageways.
- Burners: Check for proper ignition, and flame sense.
- Wiring: Check electrical connections for tightness and/or corrosion. Check wires for damage.
- Filters: Check filters and determine if any need to be replaced.

Filters

WARNING

To avoid property damage, personal injury or death, disconnect electrical power before removing filters. Never operate furnace without a filter installed because dust and lint will build up on internal parts resulting in loss of efficiency, equipment damage and possible fire.

A return air filter is not supplied with this furnace; however, there must be a means of filtering all of the return air. The installer will supply filter(s) at the time of installation.

Filter Maintenance

Improper filter maintenance is the most common cause of inadequate heating or cooling performance. Filters should be cleaned (permanent) or replaced (disposable) every two months or as required. When replacing filter, it must be replaced with a filter of the same type and size.

Become familiar with filter location and procedures for removal, cleaning and replacing them. If help is needed, contact the installer of the furnace or a qualified servicer.

Filter Removal

WARNING

HIGH VOLTAGE!

To prevent property damage, personal injury or death due to electrical shock, disconnect electrical power to the furnace BEFORE removing the filter or performing any other maintenance.

Depending on the installation, differing filter arrangements can be applied. Filters can be installed in either the central return register or a side panel external filter rack (upflow only). A media air filter or electronic air cleaner can be used as an alternate filter. Follow the filter sizes given in the Recommended Minimum Filter size table or instruction provided by the media or electronic air cleaner manufacturer to ensure proper unit performance.

To remove filters from an external filter rack in an upright upflow installation, follow the directions provided with external filter rack kit. For further details, see your distributor.

Horizontal Unit Filter Removal

Filters in horizontal installations are located in the central return register or the ductwork near the furnace.

To remove:

1. Turn OFF electrical power to the furnace.
2. Remove filter(s) from the central return register or ductwork.
3. Replace filter(s) by reversing the procedure for removal.
4. Turn ON electrical power to the furnace.

Induced Draft and Circulator Blower

Motors

The bearings in the induced draft blower and circulator blower motors are permanently lubricated by the manufacturer. No further lubrication is required. Check motor windings for accumulation of dust which may cause overheating. Clean as necessary.

Flame Sensor (Qualified Servicer Only)

Under some conditions, the fuel or air supply can create a nearly invisible coating on the flame sensor. This coating acts as an insulator causing a drop in the flame sense signal. If the flame sense signal drops too low the furnace will not sense flame and will lock out. The flame sensor should be carefully cleaned by a qualified servicer using steel wool. The flame sense signal should be 1 to 3 microamps.

Igniter (Qualified Servicer Only)

At room temperature, the igniter ohm reading should be from 20 - 100 ohms.

Burner

WARNING

To prevent personal injury or death, do not remove any internal compartment covers or attempt any adjustment. Electrical components are contained in both compartments. Contact a qualified service agent at once if an abnormal operation should develop.

The Ultra low NOx furnace uses a premix burner. The burner box is sealed to achieve safe and reliable operation.

Cleaning (Qualified Servicer Only)

1. Shut off electric power and gas supply to the furnace.
2. Disconnect the rollout limit wires, flame sensor wire, and disconnect the igniter plug.

CAUTION

Label all wires prior to disconnection when servicing controls. Wiring errors can cause improper and dangerous operation. Verify proper operation after servicing.

3. Do not remove burner or other components.
4. Clean cabinet and around the inducer blower, moter and burner box.
5. Reconnect wiring.
6. Turn on electric power and gas supply to the furnace.
7. Check furnace for proper operation. Refer to *"Operational Checks"* section to verify burner flame characteristics.

Before Leaving an Installation

- Cycle the furnace with the thermostat at least three times. Verify cooling and fan only operation.
- Review the Owner's Manual with the homeowner and discuss proper furnace operation and maintenance.
- Leave literature packet near furnace.

Repair and Replacement Parts

- When ordering any of the listed functional parts, be sure to provide the furnace model, manufacturing, and serial numbers with the order.
- Although only functional parts are shown in the parts list, all sheet metal parts, doors, etc. may be ordered by description.
- Parts are available from your distributor.

Functional Parts List-

Gas Valve
Natural Gas Orifice
Burner Assembly
Hot Surface Igniter
Flame Sensor
Gas Manifold
Ignition Control
Blower Mounting Bracket
Pressure Sensor
Pressure Sensor Hose
Induced Draft Blower
Integrated Control Module
Burner Box Gasket
Blower/Collector Box Gasket
Primary Limit Switch
Burner Temperature Switch
Auxiliary Limit Switch
Heat Exchanger
Door Switch
Transformer
Blower Wheel
Blower Housing
Blower Cutoff
Blower Motor
Motor Mount Bracket

Component ID

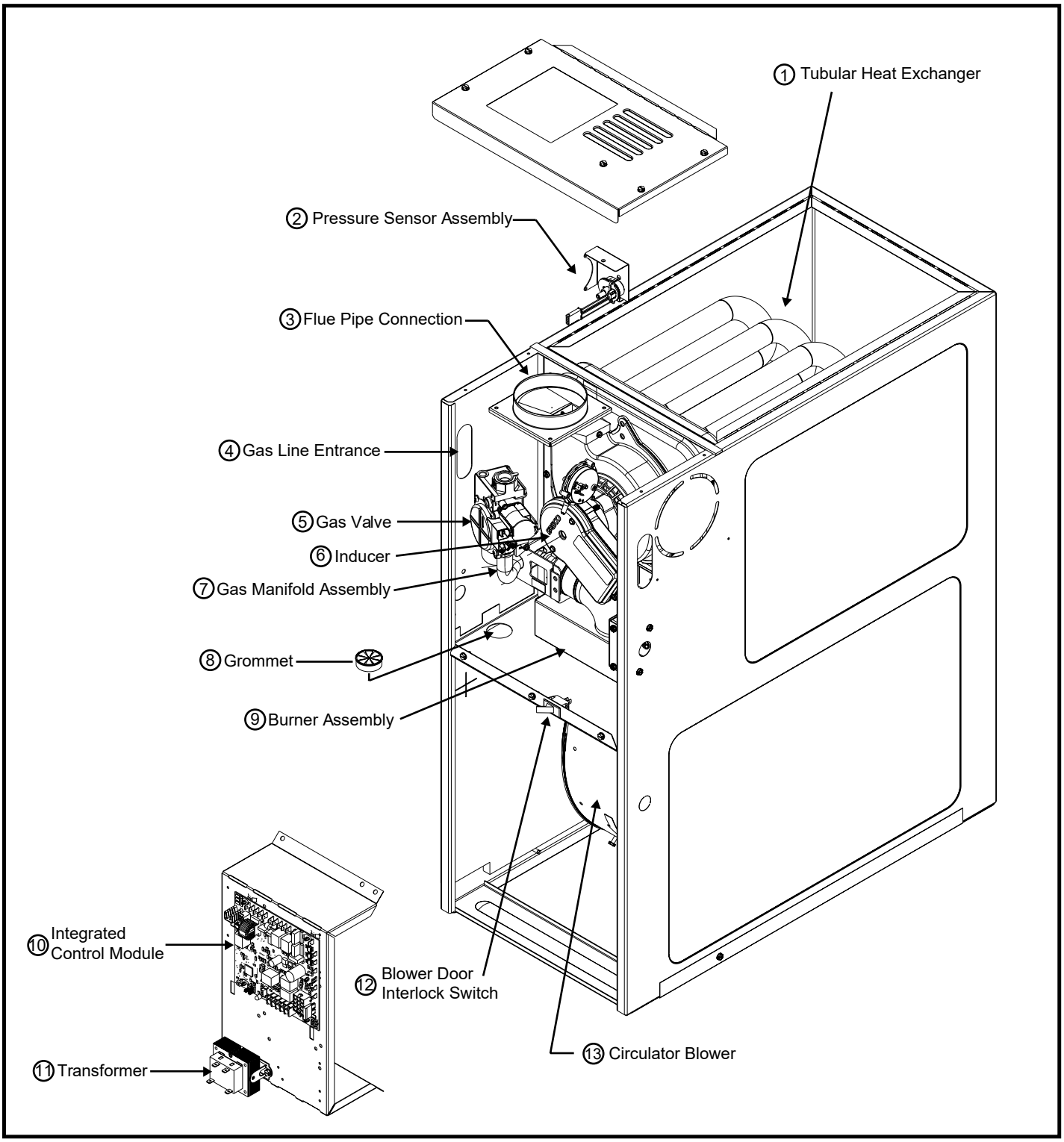

1 Tubular Heat Exchanger
2 Pressure Switch
3 Flue Pipe Connection
4 Gas Line Entrance
5 Gas Valve
6 Inducer
7 Gas Manifold Assembly
8 Wiring Harness Grommet
9 Burner Assembly
10 Integrated Control Module
11 Transformer
12 Blower Door Interlock Switch
13 Circulator Blower

Troubleshooting Chart

Furnace Status	LED Code[1]	Fault Description(s)	Possible Causes	Corrective Action	Cautions & Notes
• Furnace fails to operate. • Control LED is off.	· **None**	• No 120-volt power to furnace or 24-volt power to integrated control module. · Integrated control has an internal fault.	• Manual disconnect switch OFF, door switch open, or 24-volt wires improperly connected or loose. • Bad integrated control module.	• Assure 120- and 24-volt power to furnace integrated control module. • Check for possible shorts in 120- and 24-volt circuits. Repair as necessary. • Replace bad control module.	• Turn power OFF prior to repair. • Read precautions in “Electrostatic Discharge” section of manual.
• Furnace fails to operate. • Control LED is flashing **ONE (1) RED** flash.	☼ 1 Flash **RED**	• Furnace lockout due to an excessive number of ignition attempts. (3 total retries)[2]	• Failure to establish flame maybe due to no gas to burner, bad igniter or igniter alignment, improper orifices, or coated/oxidized or improperly connected or shorted flame sensor. • Loss of flame after establishment maybe due to interrupted gas supply, lazy burner flames (improper gas pressure or restriction in flue or improper induced draft blower performance). • Improperly connected igniter or bad igniter or ground connection to unit or burner. • Faulty integrated control.	• Locate and correct gas interruption. • Replace bad gas valve or gas orifice size. • Check flame sense signal. Clean sensor if coated and/or oxidized. • Replace induced draft blower pressure sensor. Inspect pressure sensor hose. Repair, if necessary. Inspect flue or condensate for blockage, proper length, elbows, and termination. • Compare igniter resistance to specification. Replace igniter if necessary. • Check and correct unit ground wiring. • Replace bad control module.	• Turn power and gas OFF prior to repair. · Igniter is fragile, handle with care. • Clean flame sensor with steel wool. • Replace igniter with proper replacement part. • Read precautions in “Electrostatic Discharge” section of manual.
• Furnace Fails to operate • Control LED is flashing **TWO (2) RED** flashes.	☼ 2 Flashes **RED**	• Pressure sensor indicates pressure reading when it should be zero.	• Faulty wiring to the pressure sensor. • Faulty pressure sensor.	• Check and correct pressure sensor wiring. • Replace pressure sensor.	• Turn power OFF prior to repair. • Replace pressure sensor with proper replacement part.
• Induced draft blower runs continuously with no further furnace operation. • Control LED is flashing **THREE (3) RED** flashes.	☼ 3 Flashes **RED**	• Inducer not making pressure setting. • Induced draft blower is operating properly.	• Pressure sensor hoses blocked, pinched or connected improperly. Bad wire connection. • Blocked intake, flue or weak induced draft blower.	• Replace induced draft blower pressure sensor and hoses. Replace with proper parts. • Check wiring connections. • Inspect intake and flue for blockage, proper length, elbows, and termination. • Replace induced draft blower.	• Turn power OFF prior to repair. • See “Combustion and Ventilation Air Requirements” and “Category I Venting (Vertical Venting)” section for details.
• Circulator blower runs continuously. No furnace operation. • Control LED is flashing **FOUR (4) RED** flashes.	☼ 4 Flashes **RED**	• Primary limit circuit is open.	• Insufficient conditioned air over the heat exchanger. Blocked filters, restrictive ductwork, improper circulator blower speed, or failed circulator blower. • Faulty primary limit switch. • Loose or improperly connected wiring.	• Check circulator blower speed and performance. Correct speed or replace blower if necessary. • Check filters and ductwork for blockage. Clean filters or remove obstruction. • Check primary limit. • Check position of heat exchanger shield. • Check wiring connections.	· Turn power OFF prior to repair. · Replace blower with correct replacement part. · Replace primary switch with proper replacement part.
• Induced draft blower and circulator blower runs continuously. No furnace operation. • Control LED is flashing **FIVE (5) RED** flashes.	☼ 5 Flashes **RED**	• Flame sensed with no call for heat.	· Faulty integrated control module.	· Replace bad integrated control module.	· Turn power OFF prior to repair.

Troubleshooting Chart

Furnace Status	LED Code[1]	Fault Description(s)	Possible Causes	Corrective Action	Cautions & Notes
• Furnace fails to operate. • Control LED is flashing **SIX (6) RED** flashes.	☼ 6 Flashes **RED**	• Burner temperature switch open.	• Excessive flame. • Blocked flue and/or air inlet pipe, or a failed induced draft blower. • Loose or improperly connected wiring. • Faulty burner temperature switch.	• Check and correct gas supply pressure. • Replace bad gas valve or gas orifice size. • Check flue and air inlet piping for blockage, proper length, elbows, and termination. • Check induced draft blower for proper performance. Replace, if necessary. • Check burner temperature switch. Replace if necessary. • Check wiring connections.	• See “Vent/Flue Pipe” section for piping details. • Replace induced draft blower with proper replacement part. • Replace burner temperature switch with correct replacement part.
• No furnace operation. • Control LED is flashing **SEVEN (7) RED** flashes.	☼ 7 Flashes **RED**	• Gas valve circuit shorted.	• Bad wiring • Faulty integrated control module.	• Inspect and replace wiring as needed. • Replace bad integrated control module.	• Turn power OFF prior to repair. • Read precautions in “Electrostatic Discharge” section of manual.
• No furnace operation. • Control LED is flashing **EIGHT (8) RED** flashes.	☼ 8 Flashes **RED**	• Excessive inducer motor speed or drive signal is required.	• Vent blockage or inducer hindrance. • Faulty wiring to the pressure sensor.	• Inspect vent and inducer for blockage or excessive wear and replace as needed. • Check and correct pressure sensor wiring.	• Turn power OFF prior to repair. • Replace induced draft blower with proper replacement part.
• LED is steady on	☼ Steady On **AMBER**	• OEM test mode	• N/A		
• Control LED is flashing **ONE (1) AMBER** flash.	☼ 1 Flash **AMBER**	• Low flame sense	• Flame sensor incorrectly positioned in burner flame. • Flame sensor is coated/ oxidized. • Lazy burner flame due to improper gas pressure or combustion air.	• Inspect for proper sensor alignment. • Clean flame rod. • Compare current gas pressure to rating plate info. Adjust as needed.	• Turn power OFF prior to repair. • Clean flame sensor with steel wool. • See rating plate for proper gas pressure.
• Control LED is flashing **TWO (2) AMBER** flashes.	☼ 2 Flashes **AMBER**	• ID plug failure	• Improper ID plug.	• Replace ID plug.	• Turn power OFF prior to repair.
• Control LED is flashing **THREE (3) AMBER** flashes.	☼ 3 Flashes **AMBER**	• Integrated control module fuse is blown.	• Blown fuse.	• Replace integrated control module fuse (3A).	• Turn power OFF prior to repair.
• LED is steady on	☼ Steady On **GREEN**	• Normal operation, idle/ standby.	· N/A		
• Integrated control module LED is flashing rapidly.	☼ Rapid flashes **GREEN**	• Clear error history.	· N/A	• Press and hold the SW1 button for more than 5 secs results in the display of this mode.	• Release the button while LED is flashing GREEN to clear error history.
• Integrated control module LED is flashing ONE (1) GREEN flash.	☼ 1 Flash **GREEN**	• Call for heating.	· N/A		
• Integrated control module LED is flashing **TWO (2) GREEN** flashes.	☼ 2 Flashes **GREEN**	• Call for cooling.	N/A		
• Integrated control module LED has **THREE (3) GREEN** rapid flashes.	☼ 3 Flashes **GREEN**	• Continuous fan operation.	• N/A		

• Integrated control module LED has **THREE (3) GREEN** rapid flashes.	☼ 3 Rapid Flashes **GREEN**	• ID plug installed	• N/A	• For control with unit-specific programming imbedded in the CPU, this indicates at power-up that a valid ID plug has been installed and the control will use the alternate parameters.	
• Abnormal high pitch noise during burner operation.	☼ **1 Flash GREEN**	• Abnormal combustion noise during heating.	• Insufficient combustion air or high input. · Blocked flue and/or air inlet pipe, or faulty induced draft blower or pressure sensor.	• Check and correct gas supply and manifold pressures. • Replace bad gas valve or gas orifice size. • Check flue and air inlet piping for blockage, proper length, elbows, and termination. • Check induced draft blower and pressure sensor for proper performance.	• Turn power and gas OFF prior to repair. • See “Vent/Flue Pipe” section for piping details. • Replace induced draft blower or pressure sensor with proper replacement part.

DM80SE

	Wire Color	CFM - EXTERNAL STATIC PRESSURE (Inches w.c.)												
		0.1	Rise	0.2	Rise	0.3	Rise	0.4	Rise	0.5	Rise	0.6	0.7	0.8
DM80SE0403AU	Blue	789	38	735	40	676	44	625	47	588	50	545	500	437
	Red	1209	25	1141	26	1094	27	1048	28	1004	30	968	927	890
	Orange	696	43	556	53	494	NA	436	NA	377	NA	298	238	189
	Black	728	41	669	44	612	48	564	53	514	NA	464	417	337
	Brown	982	30	928	32	877	34	830	36	782	38	740	724	680
DM80SE0603AU	Blue	1309	34	1274	35	1242	36	1211	37	1180	38	1146	1117	1090
	Red	1120	40	1097	41	1059	42	1023	43	989	45	953	919	885
	Orange	708	NA	550	NA	501	NA	449	NA	389	NA	324	276	231
	Black	713	NA	665	NA	607	NA	558	NA	508	NA	462	412	351
	Brown	987	45	920	48	874	NA	852	NA	807	NA	770	733	692
DM80SE0604BU	Blue	1339	33	1279	35	1226	36	1175	38	1128	39	1081	1032	983
	Red	1828	24	1780	25	1738	26	1697	26	1663	27	1620	1588	1546
	Orange	898	49	794	NA	723	NA	656	NA	588	NA	522	449	384
	Black	1443	31	1388	32	1339	33	1292	34	1242	36	1202	1155	1107
	Brown*	1601	28	1559	29	1513	29	1473	30	1413	31	1405	1365	1325
DM80SE0804BU	Blue	1280	46	1249	47	1201	49	1159	51	1116	53	1073	1032	994
	Red	1743	NA	1703	35	1686	35	1669	36	1640	36	1608	1576	1543
	Orange	845	NA	664	NA	596	NA	525	NA	456	NA	381	318	257
	Black	1370	43	1352	44	1310	45	1269	47	1226	48	1186	1145	1107
	Brown*	1537	39	1498	40	1483	40	1450	41	1425	42	1389	1345	1313
DM80SE0805CU	Blue	1344	44	1273	47	1217	49	1148	52	1093	54	1029	972	910
	Red	2297	NA	2240	NA	2189	NA	2142	NA	2105	NA	2063	2027	1990
	Orange	1469	40	1415	42	1359	44	1305	45	1248	47	1194	1135	1083
	Black	1672	35	1605	37	1543	38	1488	40	1453	41	1403	1351	1301
	Brown	1899	NA	1840	NA	1784	NA	1731	NA	1687	35	1642	1597	1550

*Cooling Only

WIRING DIAGRAM

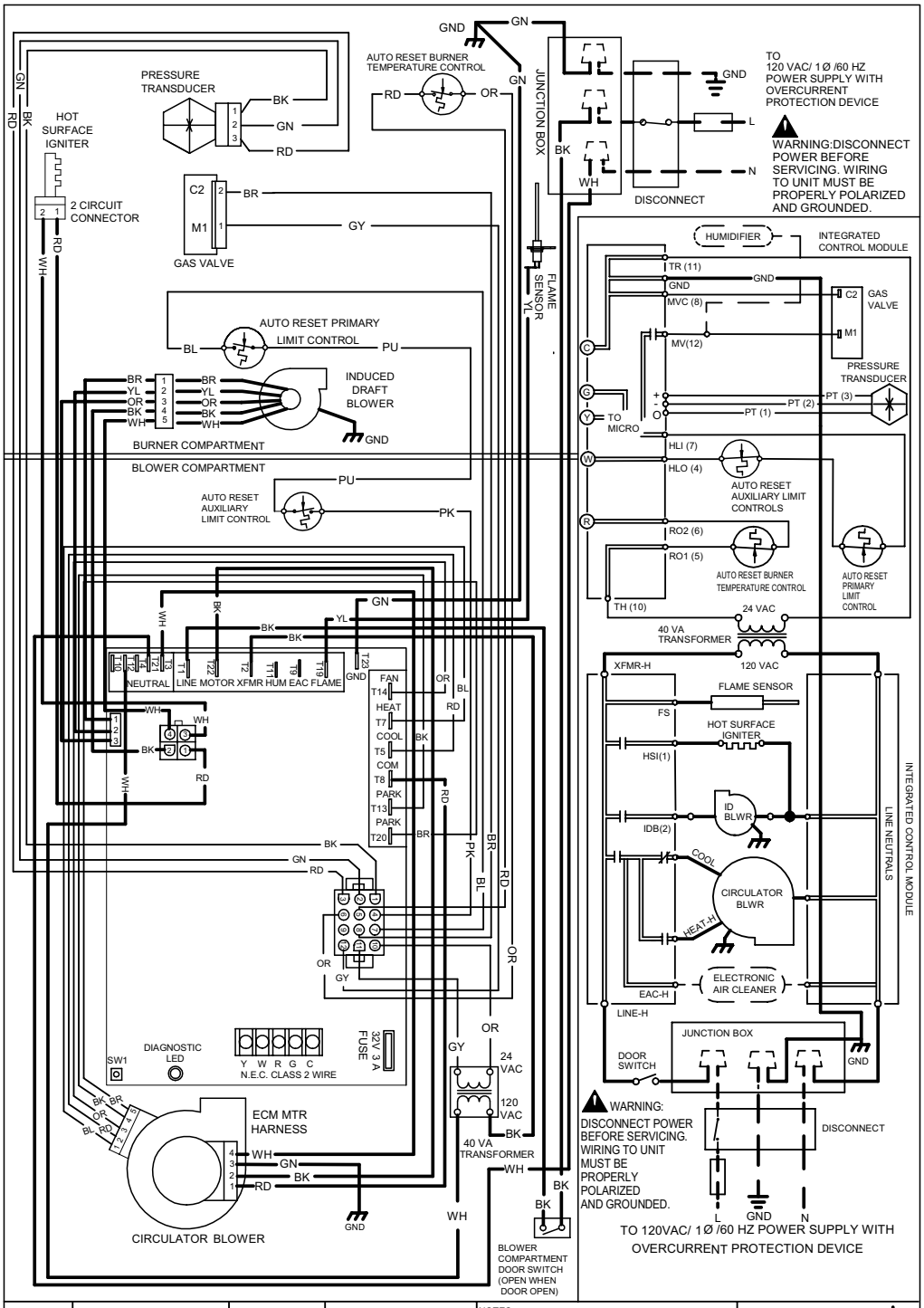

LED ACTIVITY	RED	AMBER	GREEN
STEADY ON	CONTROL FAULT DETECTED HARD LOCKOUT	OEM TEST MODE	STANDBY NORMAL OPERATION NO THERMOSTAT REQUESTS
RAPID FLASH	REVERSED LINE VOLTAGE POLARITY	FIELD TEST MODE	CLEAR ERROR HISTORY
1 FLASH	SYSTEM LOCKOUT - RETRIES EXCEEDED	LOW FLAME SENSE	CALL FOR HEATING
2 FLASHES	PS NULL ERROR :INCONSISTENT READING WITH INDUCER OFF	ID PLUG FAILURE	CALL FOR COOLING
3 FLASHES	PS NULL ERROR :INCONSISTENT READING WITH INDUCER ON	CONTROL FUSE OPEN	CONTINUOUS FAN OPERATION
4 FLASHES	HIGH LIMIT SWITCH OPEN	——	——
5 FLASHES	FLAME PRESENT WITH GAS VALVE OFF	——	——
6 FLASHES	AUXILIARY LIMIT OPEN	——	——
7 FLASHES	GAS VALVE CIRCUIT SHORTED	——	——
OFF NO LED ACTIVITY	NO 24 VAC POWER TO CONTROL		

NOTES:
1. SET HEAT ANTICIPATOR ON ROOM THERMOSTAT AT 0.7 AMPS.
2. MANUFACTUR'S SPECIFIED REPLACEMENT PARTS MUST BE USED WHEN SERVICING.
3. IF ANY OF THE ORIGINAL WIRE AS SUPPLIED WITH THE FURNACE MUST BE REPLACED, IT MUST BE REPLACED WITH WIRING MATERIAL HAVING A TEMPERATURE RATING OF AT LEAST 105° C. USE COPPER CONDUCTORS ONLY.
4. BLOWER SPEEDS SHOULD BE ADJUSTED BY INSTALLER TO MATCH THE INSTALLATION REQUIREMENTS SO AS TO PROVIDE THE CORRECT HEATING TEMPRATURE RISE AND THE CORRECT COOLING CFM.
5. UNIT MUST BE PERMANENTLY GROUNDED AND CONFORM TO N.E.C. AND LOCAL CODES.

LOW VOLTAGE (24V)
LOW VOLTAGE FIELD
HI VOLTAGE (120V)
HI VOLTAGE FIELD
JUNCTION
TERMINAL
OUTPUT
INTERNAL TO INTEGRATED CONTROL
PLUG CONNECTION

EQUIPMENT GND
FIELD GND
FIELD SPLICE
SWITCH (TEMP.)
IGNITER
SWITCH (PRESS.)
OVERCURRENT PROT. DEVICE

COLOR CODES:	
YL YELLOW	PK PINK
OR ORANGE	BR BROWN
PU PURPLE	WH WHITE
GN GREEN	BL BLUE
BK BLACK	GY GRAY
	RD RED

0140F02416-A

Wiring is subject to change. Always refer to the wiring diagram on the unit for the most up-to-date wiring.

THIS PAGE INTENTIONALLY LEFT BLANK

CUSTOMER FEEDBACK

Daikin is very interested in all product comments.
Please fill out the feedback form on the following link:
https://daikincomfort.com/contact-us
You can also scan the QR code on the right to be directed to the feedback page.

PRODUCT REGISTRATION

Thank you for your recent purchase. Though not required to get the protection of the standard warranty, registering your product is a relatively short process, and entitles you to additional warranty protection, except that failure by California and Quebec residents to register their product does not diminish their warranty rights.
For Product Registration, please register by following this link:
https://daikincomfort.com/owner-support/product-registration
You can also scan the QR code on the right to be directed to the Product Registration page.

Our continuing commitment to quality products may mean a change in specifications without notice.
© 2019 **DAIKIN MANUFACTURING COMPANY, L.P.**
5151 San Felipe St., Suite 500, Houston, TX 77056
www.daikincomfort.com