DAIKIN

INSTALLATION INSTRUCTIONS

DM80(H,S)S/DD80(H,S)S/DM80HE

GAS FURNACE - CATEGORY 1

Installer: Affix all manuals adjacent to the unit.

These furnaces comply with requirements embodied in the American National Standard / National Standard of Canada ANSI Z21.47·CSA-2.3 Gas Fired Central Furnaces.

C ETL LISTED US
Intertek

RECOGNIZE THIS SYMBOL AS A SAFETY PRECAUTION.

ATTENTION INSTALLING PERSONNEL

As a professional installer, you have an obligation to know the product better than the customer. This includes all safety precautions and related items.

Prior to actual installation, thoroughly familiarize yourself with this Instruction Manual. Pay special attention to all safety warnings. Often during installation or repair, it is possible to place yourself in a position which is more hazardous than when the unit is in operation.

Remember, it is **your** responsibility to install the product safely and to know it well enough to be able to instruct a customer in its safe use.

Safety is a matter of common sense...a matter of thinking before acting. Most dealers have a list of specific, good safety practices...follow them.

The precautions listed in this Installation Manual are intended as supplemental to existing practices. However, if there is a direct conflict between existing practices and the content of this manual, the precautions listed here take precedence.

NOTE: Please contact your distributor or our website listed below for the applicable Specification Sheet referred to in this manual.

WARNING

DAIKIN WILL NOT BE RESPONSIBLE FOR ANY INJURY OR PROPERTY DAMAGE ARISING FROM IMPROPER SERVICE OR SERVICE PROCEDURES. IF YOU INSTALL OR PERFORM SERVICE ON THIS UNIT, YOU ASSUME RESPONSIBILITY FOR ANY PERSONAL INJURY OR PROPERTY DAMAGE WHICH MAY RESULT. MANY JURISDICTIONS REQUIRE A LICENSE TO INSTALL OR SERVICE HEATING AND AIR CONDITIONING EQUIPMENT.

IOD-2005A
3/2014

Our continuing commitment to quality products may mean a change in specifications without notice.
© 2013 - 2014 DAIKIN MANUFACTURING COMPANY, L.P.
5151 San Felipe St., Suite 500, Houston, TX 77056
www.daikincomfort.com

Table of Contents

Safety Considerations 5
Additional Safety Considerations 6
Shipping Inspection 6
Electrostatic Discharge (ESD) Precautions 6
To The Installer 7
Product Application 7
Location Requirements and Considerations 8
Clearances and Accessibility 9
Installation Positions 10
Horizontal Installation 10
Furnace Suspension 10
Existing Furnace Removal 10
Thermostat Location 11
Combustion and Ventilation Air Requirements 11
Category I Venting (Vertical Venting) 11
Exterior Masonry Chimneys (Category I Furnaces Only) 12
Checklist Summary 13
Check 1 - Proper chimney termination. 13
Check 2 - Any solid or liquid fuel appliances vented into this chimney channel 14
Check 3 - Chimney Crown Condition. 14
Check 4 - Debris in Cleanout 14
Check 5 - Liner Condition. 14
Check 6 - Dilution Air. 15
Check 7 - Complete the Installation. 15
Fix 1 - Liner Termination 15
Fix 2 -Change Venting Arrangements 15
Fix 3 - Rebuild the Crown 15
Fix 4 - Relining 15
Electrical Connections 16
Wiring Harness 16
115 Volt Line Connections 17
Fossil Fuel Applications 17
Junction Box Relocation 17
24 Volt Thermostat Wiring 17
DM80HE Furnace with 2-Stage Condenser Field Wiring 18
Setting the Heat Anticipator 18
115 Volt Line Connection of Accessories 18
Electronic Air Cleaner 18
(DM80HE, DD80HS & DM80HS Models Only) 18
24 Vac Humidifier 19
Gas Supply and Piping 19
High Altitude Derate 19
Propane Gas Conversion 20
Gas Piping Connections 20
Upflow Installations 21
Counterflow Installations 21
Gas Piping Checks 21
Propane Gas Tanks and Piping 21

Table of Contents

Circulating Air and Filters 22
- Ductwork - Air Flow 22
- Checking Duct Static 23
- Filters - Read This Section Before Installing The Return Air Ductwork 23
- Upright Installations 23
- Circulation Air Filters 23
- Horizontal Installations 24

Sequence of Operation (Integrated Ignition Control) 24
- Power Up 24
- Heating Mode 24
- (Mode DIP switch is set to "1 STG" position) 24
- (Mode DIP Switch is set to "2 STG" position) 24
- Cooling Mode 25
- Fan Only Mode 25

Start-up Procedure And Adjustment 25
- Furnace operation 25
- Furnace Start-up 25
- Furnace Shutdown 25
- Gas Supply Pressure Measurement 26
- Gas Manifold Pressure Measurement and Adjustment 28
- Gas Input Rate Measurement (Natural Gas Only) 29
- Temperature Rise 29
- Circulator Blower Speed Adjustment 30
- Circulator Blower Fan Timing Adjustment 30
- Setting Furnace Operating Mode (DD80HS, DM80HS and DM80HE models only) 30

Operational Checks 31
- Burner Flame 31
- Auxiliary Limit Control 31

Safety Circuit Description 31
- General 31
- Integrated Control Module 31
- Primary Limit 31
- Auxiliary Limit 31
- Rollout Limits 32
- Pressure Switches 32
- Flame Sensor 32

Troubleshooting 32
- Electrostatic Discharge (ESD) Precautions 32
- Diagnostic Chart 32
- Fault Recall 32
- Resetting From Lockout 32

Table of Contents

Maintenance 32
- Annual inspection 32
- Filters 33
- Filter Maintenance 33
- Filter Removal 33
- Induced Draft and Circulator Blower Motors 33
- Flame Sensor (Qualified Servicer Only) 33
- Igniter (Qualified Servicer Only) 33
- Burners 33

Cleaning (Qualified Servicer Only) 33
Before Leaving an Installation 34
Repair and Replacement Parts 34
- Component ID 35
- Component ID 36
- Troubleshooting Chart 37

Appendix 36
- Troubleshooting Chart 36
- Troubleshooting Chart 37
- Troubleshooting Chart 38
- Blower Performance Data 39
  - *DM80(H,S)S 39*
  - *DD80(H,S)S 40*
- Blower Performance Data 41
  - *DM80HE 41*
- DM80SS / DD80SS Wiring Diagram 42
  - *DM80HE White Rodger Gas Valve Wiring Diagram 43*
  - *DM80HE Honeywell Gas Valve Wiring Diagram 44*
  - *DM80HS / DD80HS White Rodger Gas Valve Wiring Diagram 45*
  - *DM80HS / DD80HS Honeywell Gas Valve Wiring Diagram 46*

WARNING

DAIKIN WILL NOT BE RESPONSIBLE FOR ANY INJURY OR PROPERTY DAMAGE ARISING FROM IMPROPER SERVICE OR SERVICE PROCEDURES. IF YOU INSTALL OR PERFORM SERVICE ON THIS UNIT, YOU ASSUME RESPONSIBILITY FOR ANY PERSONAL INJURY OR PROPERTY DAMAGE WHICH MAY RESULT. MANY JURISDICTIONS REQUIRE A LICENSE TO INSTALL OR SERVICE HEATING AND AIR CONDITIONING EQUIPMENT.

SAFETY CONSIDERATIONS

Adhere to the following warnings and cautions when installing, adjusting, altering, servicing, or operating the furnace. To ensure proper installation and operation, thoroughly read this manual for specifics pertaining to the installation and application of this product.

This furnace is manufactured for use with natural gas. It may be field converted to operate on L.P. gas by using the appropriate L.P. conversion kit listed in the **PROPANE GAS/HIGH ALTITUDE INSTALLATIONS section** of this manual

Install this furnace only in a location and position as specified in **LOCATION REQUIREMENTS & CONSIDERATIONS section and INSTALLATION POSITIONS section** of this manual.

Provide adequate combustion and ventilation air to the furnace as specified in **COMBUSTION & VENTILATION AIR REQUIREMENTS section of this manual.**

Combustion products must be discharged to the outdoors. Connect this furnace to an approved vent system only, as specified in **VENT/FLUE PIPE & COMBUSTION AIR PIPE** section of this manual.

Never test for gas leaks with an open flame. Use a commercially available soap solution made specifically for the detection of leaks to check all connections, as specified in **GAS SUPPLY AND PIPING** section of this manual.

Always install a furnace to operate within the furnace's intended temperature-rise range with a duct system which has external static pressure within the allowable range, as specified on the furnace rating plate and **OPERATIONAL CHECKS section** of these instructions.

When a furnace is installed so that supply ducts carry air circulated by the furnace to areas outside the space containing the furnace, the return air shall also be handled by duct(s) sealed to the furnace casing and terminating outside the space containing the furnace.

A gas-fired furnace for installation in a residential garage must be installed as specified in the **LOCATION REQUIREMENTS AND CONSIDERATIONS section** of this manual.

This furnace may be used as a construction site heater only if certain conditions are met. These conditions are listed in the **PRODUCT APPLICATION section** of this manual.

WARNING

TO PREVENT PERSONAL INJURY OR DEATH DUE TO IMPROPER INSTALLATION, ADJUSTMENT, ALTERATION, SERVICE OR MAINTENANCE, REFER TO THIS MANUAL. FOR ADDITIONAL ASSISTANCE OR INFORMATION, CONSULT A QUALIFIED INSTALLER, SERVICER AGENCY OR THE GAS SUPPLIER.

WARNING

IF THE INFORMATION IN THESE INSTRUCTIONS IS NOT FOLLOWED EXACTLY, A FIRE OR EXPLOSION MAY RESULT CAUSING PROPERTY DAMAGE, PERSONAL INJURY OR LOSS OF LIFE.

- DO NOT STORE OR USE GASOLINE OR OTHER FLAMMABLE VAPORS AND LIQUIDS IN THE VICINITY OF THIS OR ANY OTHER APPLIANCE.
- **WHAT TO DO IF YOU SMELL GAS:**
  - DO NOT TRY TO LIGHT ANY APPLIANCE.
  - DO NOT TOUCH ANY ELECTRICAL SWITCH; DO NOT USE ANY PHONE IN YOUR BUILDING.
  - IMMEDIATELY CALL YOUR GAS SUPPLIER FROM A NEIGHBOR'S PHONE. FOLLOW THE GAS SUPPLIER'S INSTRUCTIONS.
  - IF YOU CANNOT REACH YOUR GAS SUPPLIER, CALL THE FIRE DEPARTMENT.
- INSTALLATION AND SERVICE MUST BE PERFORMED BY A QUALIFIED INSTALLER, SERVICE AGENCY OR THE GAS SUPPLIER.

WARNING

THIS PRODUCT CONTAINS OR PRODUCES A CHEMICAL OR CHEMICALS WHICH MAY CAUSE SERIOUS ILLNESS OR DEATH AND WHICH ARE KNOWN TO THE STATE OF CALIFORNIA TO CAUSE CANCER, BIRTH DEFECTS OR OTHER REPRODUCTIVE HARM.

WARNING

HEATING UNIT SHOULD NOT BE UTILIZED WITHOUT REASONABLE, ROUTINE, INSPECTION, MAINTENANCE AND SUPERVISION. IF THE BUILDING IN WHICH ANY SUCH DEVICE IS LOCATED WILL BE VACANT, CARE SHOULD BE TAKEN THAT SUCH DEVICE IS ROUTINELY INSPECTED, MAINTAINED AND MONITORED. IN THE EVENT THAT THE BUILDING MAYBE EXPOSED TO FREEZING TEMPERATURES AND WILL BE VACANT, ALL WATER-BEARING PIPES SHOULD BE DRAINED, THE BUILDING SHOULD BE PROPERLY WINTERIZED, AND THE WATER SOURCE CLOSED. IN THE EVENT THAT THE BUILDING MAY BE EXPOSED TO FREEZING TEMPERATURES AND WILL BE VACANT, ANY HYDRONIC COIL UNITS SHOULD BE DRAINED AS WELL AND, IN SUCH CASE, ALTERNATIVE HEAT SOURCES SHOULD BE UTILIZED.

WARNING

TO PREVENT POSSIBLE PROPERTY DAMAGE, PERSONAL INJURY OR DEATH DUE TO ELECTRICAL SHOCK, THE FURNACE MUST BE LOCATED TO PROTECT THE ELECTRICAL COMPONENTS FROM WATER.

DANGER
PELIGRO

CARBON MONOXIDE POISONING HAZARD

Special Warning for Installation of Furnace or Air Handling Units in Enclosed Areas such as Garages, Utility Rooms or Parking Areas

Carbon monoxide producing devices (such as an automobile, space heater, gas water heater, etc.) should not be operated in enclosed areas such as unventilated garages, utility rooms or parking areas because of the danger of carbon monoxide (CO) poisoning resulting from the exhaust emissions. If a furnace or air handler is installed in an enclosed area such as a garage, utility room or parking area and a carbon monoxide producing device is operated therein, there must be adequate, direct outside ventilation.

This ventilation is necessary to avoid the danger of CO poisoning which can occur if a carbon monoxide producing device continues to operate in the enclosed area. Carbon monoxide emissions can be (re)circulated throughout the structure if the furnace or air handler is operating in any mode.

CO can cause serious illness including permanent brain damage or death.

B10259-216

WARNING

SHOULD OVERHEATING OCCUR OR THE GAS SUPPLY FAIL TO SHUT OFF, TURN OFF THE MANUAL GAS SHUTOFF VALVE EXTERNAL TO THE FURNACE BEFORE TURNING OFF THE ELECTRICAL SUPPLY.

WARNING

POSSIBLE PROPERTY DAMAGE, PERSONAL INJURY OR DEATH DUE TO FIRE, EXPLOSION, SMOKE, SOOT, CONDENSATION, ELECTRICAL SHOCK OR CARBON MONOXIDE MAY RESULT FROM IMPROPER INSTALLATION, REPAIR OPERATION, OR MAINTENANCE OF THIS PRODUCT.

WARNING

TO PREVENT PERSONAL INJURY OR DEATH DUE TO IMPROPER INSTALLATION, ADJUSTMENT, ALTERATION, SERVICE OR MAINTENANCE, REFER TO THIS MANUAL. FOR ADDITIONAL ASSISTANCE OR INFORMATION, CONSULT A QUALIFIED INSTALLER, SERVICER AGENCY OR THE GAS SUPPLIER.

WARNING

TO PREVENT PERSONAL INJURY OR DEATH DUE TO ASPHYXIATION, THIS FURNACE MUST BE CATEGORY I VENTED. DO NOT VENT USING CATEGORY III VENTING.
PROVISIONS MUST BE MADE FOR VENTING COMBUSTION PRODUCTS OUTDOORS THROUGH A PROPER VENTING SYSTEM. THE LENGTH OF FLUE PIPE COULD BE A LIMITING FACTOR IN LOCATING THE FURNACE.

ADDITIONAL SAFETY CONSIDERATIONS

- This furnace is approved for Category I Venting only.
- Provisions must be made for venting combustion products outdoors through a proper venting system. The length of flue pipe could be a limiting factor in locating the furnace.

SHIPPING INSPECTION

All units are securely packed in shipping containers tested according to International Safe Transit Association specifications. The carton must be checked upon arrival for external damage. If damage is found, a request for inspection by carrier's agent must be made in writing immediately.

The furnace must be carefully inspected on arrival for damage and bolts or screws which may have come loose in transit. In the event of damage the consignee should:

1. Make a notation on delivery receipt of any visible damage to shipment or container.
2. Notify carrier promptly and request an inspection.
3. With concealed damage, carrier must be notified as soon as possible - preferably within five days.
4. File the claim with the following support documents within a nine month statute of limitations.

- Original or certified copy of the Bill of Lading, or indemnity bond.
- Original paid freight bill or indemnity in lieu thereof.
- Original or certified copy of the invoice, showing trade and other discounts or reductions.
- Copy of the inspection report issued by carrier's representative at the time damage is reported to carrier.

The carrier is responsible for making prompt inspection of damage and for a thorough investigation of each claim. The distributor or manufacturer will not accept claims from dealers for transportation damage.

Keep this literature in a safe place for future reference.

ELECTROSTATIC DISCHARGE (ESD) PRECAUTIONS

NOTE: Discharge body's static electricity before touching unit. An electrostatic discharge can adversely affect electrical components.

Use the following precautions during furnace installation and servicing to protect the integrated control module from damage. By putting the furnace, the control, and the person at the same electrostatic potential, these steps will help avoid exposing the integrated control module to electrostatic discharge. This procedure is applicable to both installed and non-installed (ungrounded) furnaces.

1. Disconnect all power to the furnace. Do not touch the integrated control module or any wire connected to the control prior to discharging your body's electrostatic charge to ground.
2. Firmly touch a clean, unpainted, metal surface of the furnaces near the control. Any tools held in a person's hand during grounding will be discharged.
3. Service integrated control module or connecting wiring following the discharge process in step 2. Use caution not to recharge your body with static electricity; (i.e., do not move or shuffle your feet, do not touch ungrounded objects, etc.). If you come in contact with an ungrounded object, repeat step 2 before touching control or wires.
4. Discharge your body to ground before removing a new control from its container. Follow steps 1 through 3 if installing the control on a furnace. Return any old or new controls to their containers before touching any ungrounded object.

To The Installer

Before installing this unit, please read this manual thoroughly to familiarize yourself with specific items which must be adhered to, including but not limited to: unit maximum external static pressure, gas pressures, BTU input rating, proper electrical connections, circulating air temperature rise, minimum or maximum CFM, and motor speed connections, and venting. These furnaces are designed for Category I venting only.

WARNING

To prevent property damage, personal injury or death due to fire, do not install this furnace in a mobile home, trailer, or recreational vehicle.

Product Application

This furnace is primarily designed for residential home-heating applications. It is NOT designed or certified for use in mobile homes, trailers or recreational vehicles. Neither is it designed or certified for outdoor applications. The furnace **must** be installed indoors (i.e., attic space, crawl space, or garage area provided the garage area is enclosed with an operating door).

This furnace can be used in the following non-industrial commercial applications:

Schools, Office buildings, Churches, Retail stores,
Nursing homes, Hotels/motels, Common or office areas

In such applications , the furnace must be installed with the following stipulations:

- It must be installed per the installation instructions provided and per local and national codes.
- It must be installed indoors in a building constructed on site.
- It must be part of a ducted system and not used in a free air delivery application.
- It must not be used as a "make-up" air unit.
- All other warranty exclusions and restrictions apply.

This furnace may be used as a construction site heater **ONLY** if the following conditions are met:

- The vent system is permanently installed per these installation instructions.
- A room thermostat is used to control the furnace. Fixed jumpers that provide continuous heating CANNOT be used.
- Return air ducts are provided and sealed to the furnace.
- A return air temperature range between 60ºF (16ºC) and 80ºF (27ºC) is maintained.
- Air filters are installed in the system and maintained during construction, replaced as appropriate during construction, and upon completion of construction are replaced.
- The input rate and temperature rise are set per the furnace rating plate.

- 100% outside air is provided for combustion air requirements during construction. Temporary ducting can be used.

  NOTE: Do not connect the temporary duct directly to the furnace. The duct must be sized according to the instructions under *Combustion and Ventilation Air Requirements, Section 5.3.3.*
- The furnace heat exchanger, components, duct system, air filters and evaporator coils are thoroughly cleaned following final construction clean up.
- All furnace operating conditions (including ignition, input rate, temperature rise and venting) are verified according to these installation instructions.

NOTE: The Commonwealth of Massachusetts requires that the following additional requirements must also be met:

- Gas furnaces must be installed by a licensed plumber or gas fitter.
- A T-handle gas cock must be used.
- If the unit is to be installed in an attic, the passageway to and the service area around the unit must have flooring.

WARNING

TO PREVENT PROPERTY DAMAGE, PERSONAL INJURY OR DEATH DUE TO FIRE, DO NOT INSTALL THIS FURNACE IN A MOBILE HOME, TRAILER, OR RECREATIONAL VEHICLE.

To ensure proper furnace operation, install, operate and maintain the furnace in accordance with these installation and operation instructions, all local building codes and ordinances. In their absence, follow the latest edition of the National Fuel Gas Code (NFPA 54/ANSI Z223.1), and/or CAN/CSA B149 Installation Codes, local plumbing or waste water codes, and other applicable codes.

A copy of the National Fuel Gas Code (NFPA 54/ANSI Z223.1) can be obtained from any of the following:

American National Standards Institute
1430 Broadway
New York, NY 10018

National Fire Protection Association
1 Batterymarch Park
Quincy, MA 02269

CSA International
8501 East Pleasant Valley
Cleveland, OH 44131

A copy of the CAN/CSA B149 Installation Codes can also be obtained from:

CSA International
178 Rexdale Boulevard
Etobicoke, Ontario, Canada M9W 1R3

The rated heating capacity of the furnace should be greater than or equal to the total heat loss of the area to be heated. The total heat loss should be calculated by an approved method or in accordance with "ASHRAE Guide" or "Manual J-Load Calculations" published by the Air Conditioning Contractors of America.

In the USA, this furnace MUST be installed in accordance with the latest edition of the ANSI Z223.1 booklet entitled "National Fuel Gas Code" (NFPA 54), and the requirements or codes of the local utility or other authority having jurisdiction. In Canada, this furnace must be installed in accordance with the current CAN/CGA-B149.1 & 2 Gas Installation Codes, local plumbing or waste water codes and other applicable codes. Additional helpful publications available from the NFPA are, NFPA 90A - Installation of Air Conditioning and Ventilating System and NFPA 90B - Warm Air Heating and Air Conditioning System.

All venting shall be in accordance with PART 7, Venting of Equipment, of the National Fuel Gas Code, ANSI Z223.1, or applicable local building and/or air conditioning codes. These publications are available from:

National Fire Protection Association, Inc.
1 Batterymarch Park, Quincy, MA 02269

NOTE: Furnaces with NOx screens meet the California NOx emission standards and California seasonal efficiency standards. ANNUAL inspections of the furnace and its vent system is strongly recommended.

Location Requirements and Considerations

Your unit model type determines which installation procedures must be used. For DM80HS and DM80SS models, you must follow instructions for Horizontal Left, Horizontal Right or Upflow installations only. These furnaces are not approved for Downflow installations.
Downflow models **DD80(H,S)S ARE NOT APPROVED FOR HORIZONTAL OR UPFLOW INSTALLATIONS**. For these models, use only the instructions for downflow installation only.

WARNING

TO PREVENT POSSIBLE EQUIPMENT DAMAGE, PROPERTY DAMAGE, PERSONAL INJURY OR DEATH, THE FOLLOWING BULLET POINTS MUST BE OBSERVED WHEN INSTALLING THIS UNIT.

Follow the instructions listed below when selecting a furnace location. Refer also to the guidelines provided in *Section V, Combustion and Ventilation Air Requirements.*

- Centrally locate the furnace with respect to the proposed or existing air distribution system.
- Ensure the temperature of the return air entering the furnace is between 55°F and 100°F when the furnace is heating.
- If the furnace is installed in an application where the typical operating sound level of a furnace is deemed objectionable, an optional sound reduction kit is available. Consult your local distributor for more details.
- Provisions must be made for venting combustion products outdoors through a proper venting system. The length of flue pipe could be a limiting factor in locating the furnace.

- Ensure adequate combustion air is available for the furnace. Improper or insufficient combustion air can expose building occupants to gas combustion products that could include carbon monoxide. Refer to *Section V, Combustion and Ventilation Air Requirements.*
- The furnace must be level. If the furnace is to be set on a floor that may become wet or damp at times, the furnace should be supported above the floor on a concrete base sized approximately 1-1/2" larger than the base of the furnace.
- Ensure upflow or horizontal furnaces are not installed directly on carpeting, or any other combustible material. The only combustible material allowed is wood.
- Exposure to contaminated combustion air will result in safety and performance-related problems. Do not install the furnace where the combustion air is exposed to the following substances:

  chlorinated waxes or cleaners
  chlorine-based swimming pool chemicals
  water softening chemicals
  deicing salts or chemicals
  carbon tetrachloride
  halogen type refrigerants
  cleaning solutions (such as perchloroethylene)
  printing inks
  paint removers
  varnishes
  hydrochloric acid
  cements and glues
  antistatic fabric softeners for clothes dryers and masonry acid washing materials
- If the furnace is used in connection with a cooling unit, install the furnace upstream or in parallel with the cooling unit coil. Premature heat exchanger failure will result if the cooling unit coil is placed ahead of the furnace.

  For vertical (upflow or downflow) applications, the minimum cooling coil width shall not be less than furnace width minus 1". Additionally, a coil installed above an upflow furnace or under a counterflow furnace may be the same width as the furnace or may be one size larger than the furnace. Example: a "C" width coil may be installed with a "B" width furnace.

  For upflow applications, the front of the coil and furnace must face the same direction.
- If the furnace is installed in a residential garage, position the furnace so that the burners and ignition source are located not less than 18 inches (457 mm) above the floor. Protect the furnace from physical damage by vehicles.
- If the furnace is installed horizontally, the furnace access doors must be vertical so that the burners fire horizontally into the heat exchanger. Do not install the unit with the access doors on the "up/top" or "down/bottom" side of the furnace.
- Do not connect this furnace to a chimney flue that serves a separate appliance designed to burn solid fuel.
- For counterflow installations, the air conditioning coil must be downstream from the heat exchanger of the furnace.
- Counterflow installation over a noncombustible floor. Before setting the furnace over the plenum opening, ensure the surface around the opening is smooth and level. A tight seal should be made between the furnace base and floor by using a silicon rubber caulking compound or cement grout.
- Counterflow installation over a combustible floor. If installation over a combustible floor becomes necessary, use an accessory subbase (see Specification Sheet applicable to your model for details). A special accessory subbase must be used for upright counterflow unit installations over any combustible material including wood. Follow the instructions with the subbase for proper installations. Do not install the furnace directly on carpeting, tile, or other combustible material other than wood flooring. (**NOTE**: The subbase will not be required if an air conditioning coil is installed between the supply air opening on the furnace and the floor.

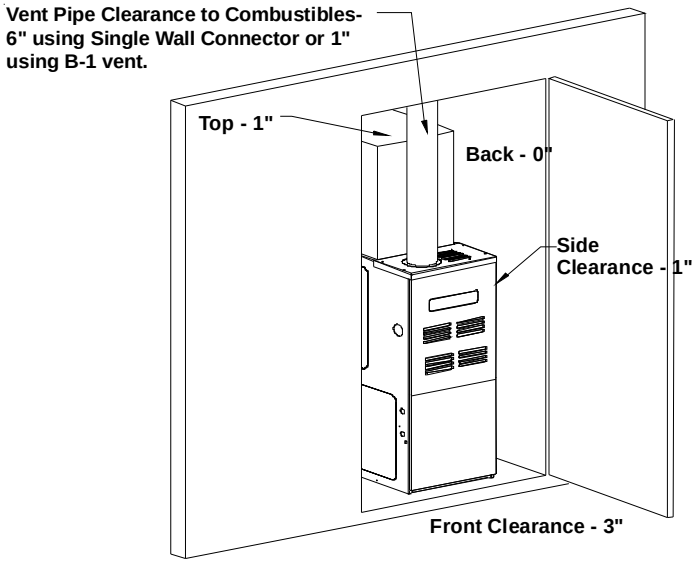

- Adequate combustion/ventilation air must be supplied to the closet.
- Furnace must be **completely** sealed to floor or base. Combustion/ ventilation air supply pipes must terminate 12" from top of closet and 12" from floor of closet. DO NOT remove solid base plate for side return.
- Return air ducts must be **completely** sealed to the furnace and terminate outside the enclosure surfaces.

CLEARANCES AND ACCESSIBILITY

Unobstructed front clearance of 24" **for servicing** is recommended.

VENT		SIDES	FRONT	BACK	TOP (PLENUM)
B1-VENT	SINGLE				
1"	6"	1"	3"	0"	1"

Top clearance for horizontal configuration - 1"

Installation Positions

An upflow furnace may be installed in an upright position or horizontal on either the left or right side panel. Do not install this furnace on its back. For vertically installed *upflow* furnaces, return air ductwork may be attached to the side panel(s) and/or basepan. For *horizontally* installed *upflow* furnaces, return air ductwork must be attached to the basepan. For *counterflow* furnaces, return ductwork must be attached to the top end of the blower compartment.

NOTE: Ductwork must never be attached to the back of the furnace.

Horizontal Installation

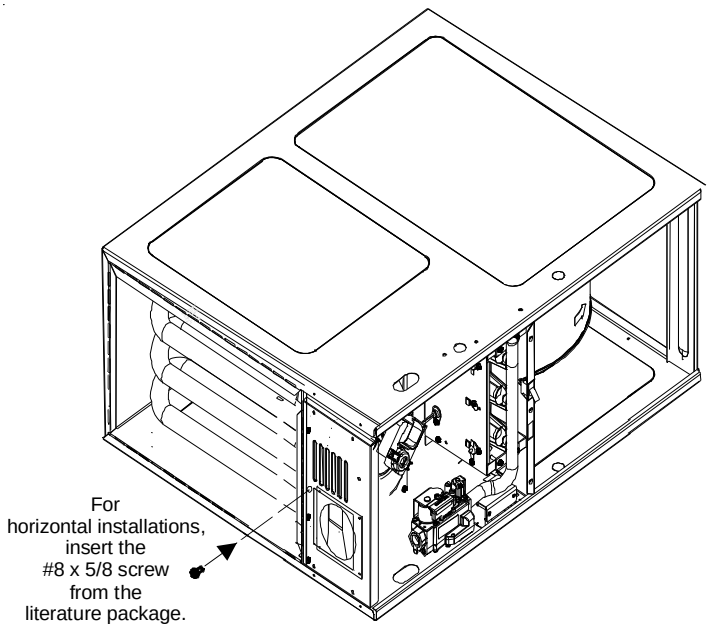

Line contact to framing is permitted when installed in the horizontal configuration. Line contact is defined as the portion of the cabinet that is formed by the intersection of the top and side. ACCESSIBILITY CLEARANCE, WHERE GREATER, SHOULD TAKE PRECEDENCE OVER MINIMUM FIRE PROTECTION CLEARANCE. A gas-fired furnace for installation in a residential garage must be installed so that the ignition source and burners are located not less than eighteen inches (18") above the floor and is protected or located to prevent physical damage by vehicles. A gas furnace must not be installed directly on carpeting, tile, or other combustible materials other than wood flooring.

Furnace Suspension

If suspending the furnace from rafters or joist, use 3/8" threaded rod and 2”x2”x3/8” angle iron as shown below. The length of rod will depend on the application and the clearances necessary.

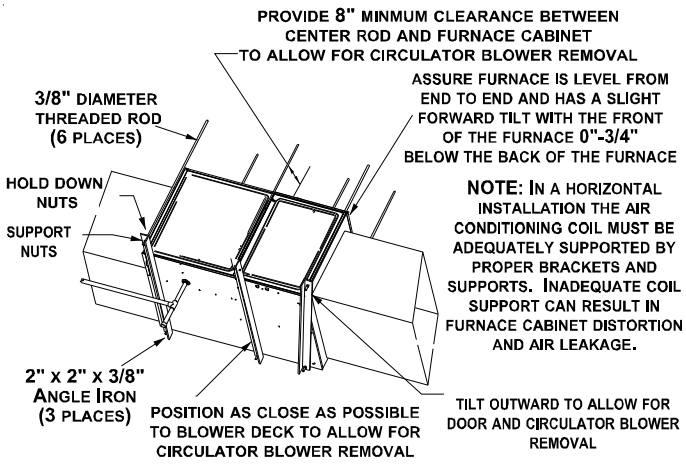

Suspended Furnace

Existing Furnace Removal

NOTE: When an existing furnace is removed from a venting system serving other appliances, the venting system may be too large to properly vent the remaining attached appliances.

The following vent testing procedure is reproduced from the **American National Standard/National Standard of Canada for Gas-Fired Central Furnaces ANSI Z21.47-Latest Edition, CSA-2.3-Latest Edition Section 1.23.1.** The following steps shall be followed with each appliance connected to the venting system placed in operation, while any other appliances connected to the venting system are not in operation:

a. Seal any unused openings in the venting system;
b. Inspect the venting system for proper size and horizontal pitch, as required by the National Fuel Gas Code, ANSI Z223.1 or the CAN/CSA B149 Installation Codes and these instructions. Determine that there is no blockage or restriction, leakage, corrosion and other deficiencies which could cause an unsafe condition;
c. In so far as practical, close all building doors and windows and all doors between the space in which the appliance(s) connected to the venting system are located and other spaces of the building. Turn on clothes dryers and any appliance not connected to the venting system. Turn on any exhaust fans, such as range hoods and bathroom exhausts, so they shall operate at maximum speed. Do not operate a summer exhaust fan. Close fireplace dampers;
d. Follow the lighting instructions. Place the appliance being inspected in operation. Adjust thermostat so appliance shall operate continuously;
e. Test for draft hood equipped appliance spillage at the draft hood relief opening after 5 minutes of main burner operation. Use the flame of a match or candle;
f. After it has been determined that each appliance connected to the venting system properly vents when tested as outlined above, return doors, windows, exhaust fans, fireplace dampers and any other gas burning appliance to their previous conditions of use;
g. If improper venting is observed during any of the above tests, the common venting system must be corrected.

Corrections must be in accordance with the latest edition of the National Fuel Gas Code NFPA 54/ANSI Z223.1 and/or CAN/CSA B149 Installation Codes.

If resizing is required on any portion of the venting system, use the appropriate table in Appendix G in the latest edition of the National Fuel Gas Code ANSI Z223.1 and/or CAN/CSA B149 Installation Codes.

Thermostat Location

In an area having good air circulation, locate the thermostat about five feet high on a vibration-free inside wall. Do not install the thermostat where it may be influenced by any of the following:

- Drafts, or dead spots behind doors, in corners, or under cabinets.
- Hot or cold air from registers.
- Radiant heat from the sun.
- Light fixtures or other appliances.
- Radiant heat from a fireplace.
- Concealed hot or cold water pipes, or chimneys.
- Unconditioned areas behind the thermostat, such as an outside wall.

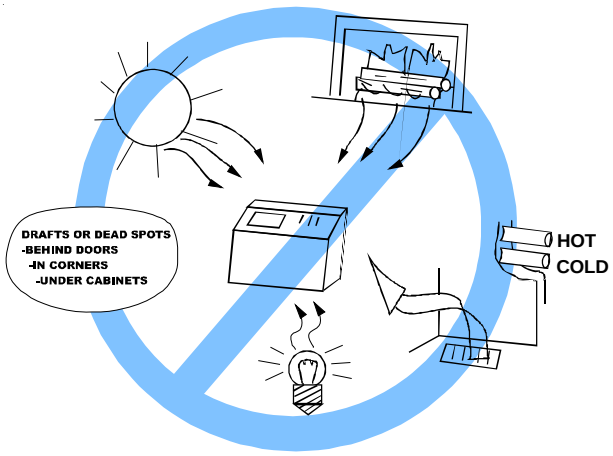

Thermostat Influences

Consult the instructions packaged with the thermostat for mounting instructions and further precautions.

Combustion and Ventilation Air Requirements

WARNING

To avoid property damage, personal injury or death, sufficient fresh air for proper combustion and ventilation of flue gases must be supplied. Most homes require outside air be supplied into the furnace area.

Improved construction and additional insulation in buildings have reduced heat loss by reducing air infiltration and escape around doors and windows. These changes have helped in reducing heating/cooling costs but have created a problem supplying combustion and ventilation air for gas fired and other fuel burning appliances. Appliances that pull air out of the house (clothes dryers, exhaust fans, fireplaces, etc.) increase the problem by starving appliances for air.

House depressurization can cause back drafting or improper combustion of gas-fired appliances, thereby exposing building occupants to gas combustion products that could include carbon monoxide.

If this furnace is to be installed in the same space with other gas appliances, such as a water heater, ensure there is an adequate supply of combustion and ventilation air for the other appliances. Refer to the latest edition of the National Fuel Gas Code NFPA 54/ANSI Z223.1 or CAN/CSA B149 Installation Codes or applicable provisions of the local building codes for determining the combustion air requirements for the appliances.

This furnace must use indoor air for combustion. It cannot be installed as a direct vent (i.e., sealed combustion) furnace.

Most homes will require outside air be supplied to the furnace area by means of ventilation grilles or ducts connecting directly to the outdoors or spaces open to the outdoors such as attics or crawl spaces.

Category I Venting (Vertical Venting)

WARNING

To prevent possible personal injury or death due to asphyxiation, this furnace must be Category I vented. Do not vent using Category III venting.

Category I Venting is venting at a non-positive pressure. A furnace vented as Category I is considered a fan-assisted appliance and the vent system does not have to be "gas tight." **NOTE:** Single stage gas furnaces with induced draft blowers draw products of combustion through a heat exchanger allowing, in some instances, common venting with natural draft appliances (i.e. water heaters). All installations must be vented in accordance with National Fuel Gas Code NFPA 54/ANSI Z223.1 - latest edition. In Canada, the furnaces must be vented in accordance with the National Standard of Canada, CAN/CSA B149.1 and CAN/CSA B149.2 - latest editions and amendments.

NOTE: Masonry vent kit (MVK-01 and MVK-02) is to only be used on interior masonry chimneys or qualifying exterior masonry chimney applications identified in the MVK kit installation instructions. To ensure safe and reliable operation, use only the kit listed for your model.

Kit	Input KBTU Range	Limit Setting
MVK-01	40-100	250°F
MVK-02	120-140	290°F

Note: This kit is for use on Daikin brand 80% AFUE, 33" tall "HS" and "SS" model furnaces installed in the upflow position only.

NOTE: The vertical height of the Category I venting system must be at least as great as the horizontal length of the venting system.

WARNING

TO PREVENT POSSIBLE PERSONAL INJURY OR DEATH DUE TO ASPHYXIATION, COMMON VENTING WITH OTHER MANUFACTURER'S INDUCED DRAFT APPLIANCES IS NOT ALLOWED.

The minimum vent diameter for the Category I venting system is as shown:

MODEL	MINIMUM VENT	
	UPFLOW	COUNTERFLOW
40	4 Inch	4 Inch
60	4 Inch	4 Inch
80	4 Inch	4 Inch
100	5 Inch	5 Inch
120	5 Inch	N/A
140	5 Inch	N/A

Under some conditions, larger vents than those shown above may be required or allowed. *When an existing furnace is removed from a venting system serving other appliances*, the venting system may be too large to properly vent the remaining attached appliances.

Upflow or Horizontal units are shipped with the induced draft blower discharging from the top of the furnace. ("Top" is as viewed for an upflow installation.) The induced draft blower can be rotated 90 degrees with the (0270F01119) chimney transition bottom kit for Category I venting. For horizontal installations, a four inch single wall pipe can be used to extend the induced draft blower outlet 1/2" beyond the furnace cabinet. **THIS PRODUCT IS NOT DESIGNED FOR COUNTERCLOCKWISE INDUCED DRAFT BLOWER ROTATION.**

Vent the furnace in accordance with the National Fuel Gas Code NFPA 54/ANSI Z223.1 - latest edition. In Canada, vent the furnace in accordance with the National Standard of Canada, CAN/CSA B149.1 and CAN/CSA B149.2 - latest editions and amendments.

Venting - Furnace Installed in Horizontal Position

THIS FURNACE IS NOT DESIGN CERTIFIED TO BE HORIZONTALLY VENTED THROUGH AN EXTERIOR SIDE WALL.

The following describes an optional venting procedure when the furnace is installed in the horizontal left discharge position.

To rotate the induced draft blower clockwise, you will need to purchase one (0270F01119) chimney transition bottom kit.

1. Disconnect electrical power from the furnace.
2. Disconnect the induced draft blower power leads, flue pipe, and pressure switch tubing.
3. Remove the round cutout from the right side of the wrapper.
4. Remove and save the four screws that fasten the induced draft blower to the flue collector box.
5. Remove and save the three screws that hold the chimney assembly to the induced draft blower.
6. Remove and save the four screws that fasten the chimney top to the chimney bottom.
7. Remove the chimney transition bottom from the transition bottom kit.
8. Install the chimney top with the four screws retained from step 6 onto the new chimney transition bottom from the transition bottom kit.
9. Remove the induced draft blower and install the new chimney assembly to it using the three screws retained from step 5.
10. Rotate the induced draft blower 90 degrees to the right, feed the flue pipe through the round cutout from the outside of the wrapper, and fit onto the chimney top assembly. Secure the pipe to the chimney top from the front, top, and bottom using (3) screws and rotating the induced draft blower to properly orient the assembly. NOTE: If the pipe section is less than 18", then attach it directly to the chimney top on 3 sides and feed it through the round cutout from the inside of the wrapper.
11. Reattach the induced draft blower using the (4) screws retained from step 3. Ensure the gasket located between the induced draft blower and collector box is rotated accordingly.
12. Reconnect the induced draft blower power leads. NOTE: If the wires are not long enough, pull extra wire from the wire bundle in the blower compartment.
13. Reconnect the remaining flue pipe, and the pressure switch tubing. Ensure that all wires and the pressure switch tubing is at least one inch from the flue pipe, or any other hot surface.
14. Restore power to furnace.

NOTE: In a horizontal installation the air conditioning coil must be adequately supported by proper brackets and supports. Inadequate coil support can result in furnace cabinet distortion and air leakage.

Counterflow units are shipped with the induced draft blower discharging from the top of the furnace. ("Top" as viewed for a counterflow installation.)

Vent the furnace in accordance with the National Fuel Gas Code NFPA54/ANSI Z223.1-latest edition. In Canada, vent the furnace in accordance with the national standard of Canada, CAN/CSA B149.1 and CAN/CSA B149.2- latest editions and amendments.

WARNING

NEVER ALLOW THE PRODUCTS OF COMBUSTION, INCLUDING CARBON MONOXIDE, TO ENTER THE RETURN DUCTWORK OR CIRCULATION AIR SUPPLY.

EXTERIOR MASONRY CHIMNEYS (CATEGORY I FURNACES ONLY)

An exterior masonry chimney is defined as a "Masonry" chimney exposed to the outdoors on one or more sides below the roof line." The ability to use a clay lined masonry chimney depends on a parameter not associated with interior chimneys.

This variable is the geographic location of the installation. Researchers have discovered that the winter design temperatures have a direct impact on the suitability of this type of venting. In most situations, the existing masonry chimneys will require a properly sized metallic liner.

WARNING

POSSIBILITY OF PROPERTY DAMAGE, PERSONAL INJURY OR DEATH DAMAGING CONDENSATION CAN OCCUR INSIDE MASONRY CHIMNEYS WHEN A SINGLE FAN-ASSISTED CATEGORY I APPLIANCE (80% AFUE FURNACE) IS VENTED WITHOUT ADEQUATE DILUTION AIR. DO NOT CONNECT AN 80% FURNACE TO A MASONRY CHIMNEY UNLESS THE FURNACE IS COMMON VENTED WITH A DRAFT HOOD EQUIPPED APPLIANCE OR THE CHIMNEY IS LINED WITH A METAL LINER OR TYPE B METAL VENT. ALL INSTALLATIONS USING MASONRY CHIMNEYS MUST BE SIZED IN ACCORDANCE WITH THE APPROPRIATE VENTING TABLES. IF AN 80% FURNACE IS COMMON VENTED WITH A DRAFT HOOD EQUIPPED APPLIANCE, THE POTENTIAL FOR CONDENSATION DAMAGE MAY STILL EXIST WITH EXTREMELY COLD CONDITIONS, LONG VENT CONNECTORS, EXTERIOR CHIMNEYS, OR ANY COMBINATION OF THESE CONDITIONS. THE RISK OF CONDENSATION DAMAGE IS BEST AVOIDED BY USING MASONRY CHIMNEY AS A PATHWAY FOR PROPERLY SIZED METAL LINER OR TYPE B METAL VENT.

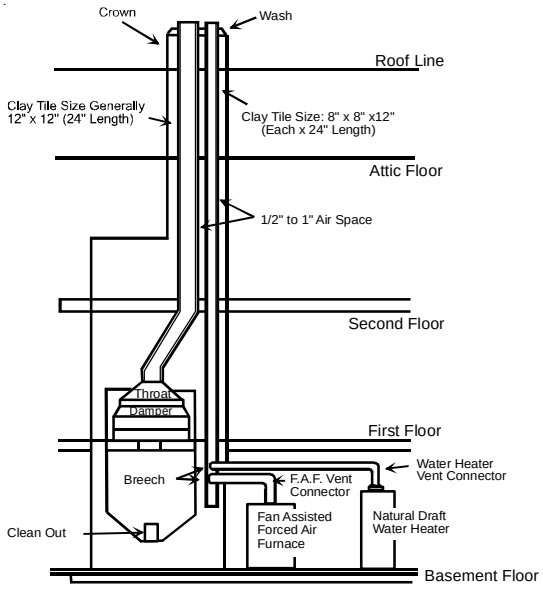

Typical Multiple Flue Clay Tile Chimney

CHECKLIST SUMMARY

This checklist serves as a summary of the items to be checked before venting an 80+ furnace into a masonry chimney. In addition, we recommend that a qualified serviceman use this checklist to perform a yearly inspection of the furnace venting system.

This checklist is only a summary. For detailed information on each of the procedures mentioned, see the paragraph referenced with each item.

This inspection is based upon a draft topical report, “Masonry Chimney Inspection and Relining”, issued by the Gas Research Institute. While not yet finalized, we believe this report represents the best information on this subject which is currently available.

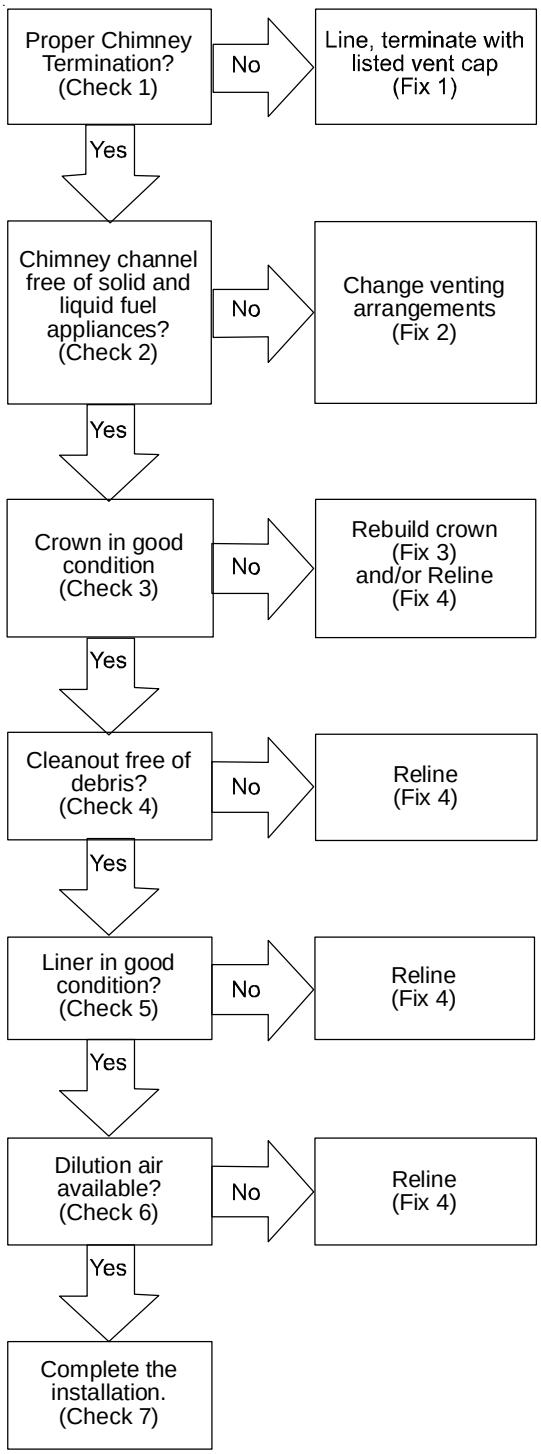

CHECK 1 - PROPER CHIMNEY TERMINATION.

A masonry chimney used as a vent for gas fired equipment must extend at least three feet above the highest point where it passes through the roof. It must extend at least two feet higher than any portion of a building within a horizontal distance of 10 feet. In addition, the chimney must terminate at least 3 feet above any forced air inlet located within 10 feet. The chimney must extend at least five feet above the highest connected equipment draft hood outlet or flue collar.

If the chimney does not meet these termination requirements, but all other requirements in the checklist can be met, it may be possible for a mason to extend the chimney. If this will not be practical, see Fix 1.

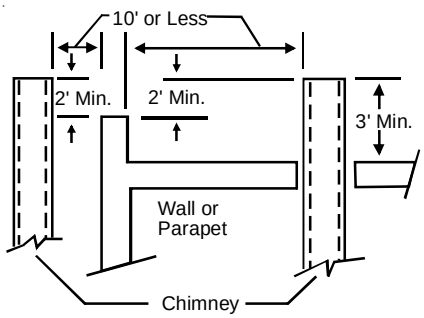

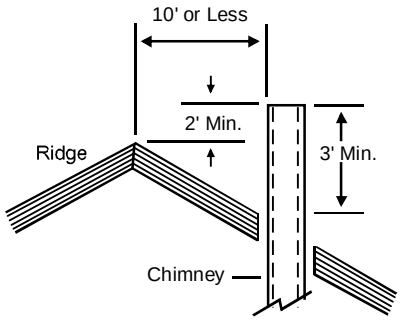

Termination 10 Feet Or Less From Ridge, Wall or Parapet

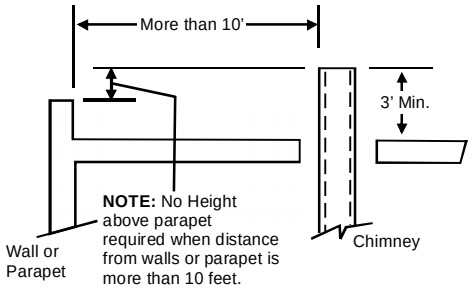

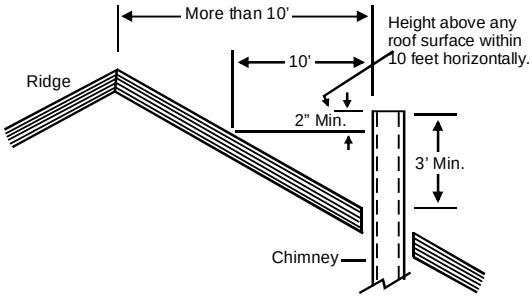

Termination More Than 10 Feet From Ridge, Wall or Parapet

CHECK 2 - ANY SOLID OR LIQUID FUEL APPLIANCES VENTED INTO THIS CHIMNEY CHANNEL

Solid fuel appliances include fireplaces, wood stoves, coal furnaces, and incinerators.

Liquid fuel appliances include oil furnaces, oil-fired boilers and oil-fired water heaters.

Appliances which burn propane (sometimes referred to as LP (liquefied petroleum)) gas are considered gas-fired appliances.

CHECK 3 - CHIMNEY CROWN CONDITION.

Damage from condensate usually shows up first in the crown. If any of the following trouble signs are present, the condition of the crown is not satisfactory:

a) Crown leaning
b) Bricks missing
c) Mortar missing
d) Tile liner cracked
e) No tile liner
f) Salt staining at mortar joints. (White stains, and mortar becomes sandy and/or erodes.)

For problems a, b, or c, see Fix 3. If problems d, e, or f are present, see Fix 4. IMPORTANT: It may be necessary to follow both Fix 3 and Fix 4.

CHECK 4 - DEBRIS IN CLEANOUT

A cleanout (dropleg) must be present such that the upper edge of the cleanout cover is at least 12 inches below the lower edge of the lowest chimney inlet opening.

A chimney without a cleanout could become partially blocked by debris. If no cleanout is present, the chimney must be relined (Fix 4). Remove the cleanout cover, and examine the cleanout for debris. If significant amounts of any of the following are found:

- Fuel oil residue
- Bricks
- Mortar or sand
- Pieces of the tile liner
- Rusted pieces of the metallic liner - reline the chimney (Fix 4).

CHECK 5 - LINER CONDITION.

If a metal liner is present, it must be checked. It cannot be assumed that all existing metal liners are correctly installed and in good condition.

Remove the lowest existing vent connector, and examine the inside of the elbow or tee at the base of the liner. A small amount of soot may be considered acceptable, provided the installer vacuums it away. If rusted pieces of the liner have collected here, the metal liner must be removed and replaced (Fix 4).

Next, gently tap the inside of the liner with a Phillips screwdriver. If the screwdriver perforates the liner, or if the tapping does not sound like metal hitting metal, the liner must be removed and replaced (Fix 4).

Remember that all appliances must be vented inside the liner. Venting one appliance inside the liner and another appliance outside the liner is not acceptable.

Next, use a flashlight and small mirror to sight up the liner. B vent must be supported so as to not come into direct contact with the chimney walls or tile liner. If it is not, it can probably be rehung so as to be acceptable. A thimble or fire stop may be helpful here.

Flexible liners should be hung straight or nearly straight. If it is spiraled in the chimney and in good condition, it should be rehung. To do this, break the top seal; pull up and cut off the excess liner length, and refit the top seal. Use caution when doing this, as the cut edges of flexible liners may be sharp.

The surfaces of the liner must be physically sound. If gaps or holes are present, the metal liner must be removed and replaced (Fix 4). Finally, confirm that the metal liner is the correct size for the appliances to be installed. Use the GAMA tables and rules.

If a metal liner is not present, a clay tile liner must be present, or the chimney must be lined (Fix 4).

Use a flashlight and small mirror at the cleanout or vent connector to inspect the clay tile liner. If any of the following problems are present:

- Tile sections misaligned
- Tile sections missing
- Gaps between tile sections
- Signs of condensate drainage at the cleanout or vent connectors
- Mortar protruding from between tile sections
- Use of sewer pipe or drainage pipe rather than an approved fire clay tile reline the chimney (Fix 4).

Next, measure the size of the liner. It may be possible to do this from the cleanout. The liner must be at least as large as the minimum size established by the tables in National Fuel Gas Code NFPA 54/ANSI Z223.1 - latest edition and in the National Standard of Canada, CAN/CSA B149.1 and CAN/CSA B149.2 - latest editions and amendments. If the liner is too small or too large, then the chimney must be relined (Fix 4).

Check 6 - Dilution Air.

If gas-fired appliances are to be vented into a clay tile liner, a source of dilution air is required.

Dilution air cannot be obtained through:

- Induced draft appliances
- Natural draft appliances with vent dampers

Sufficient dilution air can ordinarily be obtained through the draft hood of a natural draft appliance only if the appliance's vent connector does not include a vent damper. If dilution air will not be available, the chimney must be relined (Fix 4).

Check 7 - Complete the Installation.

If Checks 1 through 6 have been satisfactory, and the liner is an acceptable size as determined by the tables in National Fuel Gas Code NFPA 54/ANSI Z223.1 - latest edition and in the National Standard of Canada, CAN/CSA B149.1 and CAN/CSA B149.2 - latest editions and amendments, then the clay tile liner can probably be used as a vent for the gas appliances. However, the installer must keep in mind the following factors which may render the tile liner unsuitable for use as a vent:

- Extremely cold weather
- Long vent connectors
- Masonry chimneys with no air gap between the liner and the bricks. (In practice, this can be difficult to detect.)
- Exterior chimneys (The tables in National Fuel Gas Code NFPA 54/ANSI Z223.1 - latest edition and in the National Standard of Canada, CAN/CSA B149.1 and CAN/CSA B149.2 - latest editions and amendments assume interior chimneys.)

If, in the judgment of the local gas utility, installer, and/or local codes; one or more of the above factors is likely to present a problem, the chimney must be relined (Fix 4).

Fix 1 - Liner Termination

Any cap or roof assembly used with a liner must be approved by the liner manufacturer for such use. The liner and cap/roof assembly must then terminate above the roof in accordance with the manufacturer's instructions.

In some cases, a shorter extension above the roof may be possible with a liner than would be required with a masonry chimney.

For further information on relining, see Fix 4.

Fix 2 -Change Venting Arrangements

If the masonry chimney has more than one channel, it may be possible to vent the gas appliances into one channel and vent the solid or liquid fuel appliance(s) into another channel(s). Do not vent an 80+ Furnace inside of a metal liner with other appliances vented outside the liner.

Alternatively, the homeowner may agree to discontinue use of the fireplace (solid fuel appliance). If so, the tile liner must be cleaned to remove creosote buildup. The fireplace opening must then be permanently sealed.

If oil-fired appliance(s) are being replaced by gas-fired appliance(s), the tile liner must first be cleaned to remove the fuel oil residue.

If none of the above options is practical, the furnace may need to be vented vertically with a B Vent.

Under some conditions, a 90%+ furnace could be installed rather than an 80% furnace. The 90%+ furnace can be vented horizontally or vertically through PVC pipe.

Fix 3 - Rebuild the Crown

If the chimney crown is damaged, a qualified mason must repair it in accordance with nationally recognized building codes or standards. One such standard which may be referenced is the Standard for Chimneys, Fireplaces, Vents, and Solid Fuel Burning Appliances, ANSI/NFPA 211.

Fix 4 - Relining

Relining options include B vent and flexible liners.

If the chimney has diagonal offsets, B vent probably cannot be used.

If B vent is to be used, it must be supported adequately. Supports (such as fire stops or thimbles) must be used to prevent the B vent from coming into direct contact with the tile liner or chimney walls. Direct contact would result in higher heat loss, with an increased possibility of poor venting system performance.

It is not acceptable to vent one appliance inside the B vent and other appliances outside. The excess space between the B vent and the chimney walls must be covered at the top of the chimney by a weatherproof, corrosion resistant flashing.

The B vent should then be topped with a listed vent cap. The listed vent cap will, when installed per the manufacturer's instructions, prevent problems due to rain, birds, or wind effects.

A B-vent installed as described in this section is considered to be an enclosed vent system, and the sizing tables in National Fuel Gas Code NFPA 54/ANSI Z223.1 - latest edition and in the National Standard of Canada, CAN/CSA B149.1 and CAN/CSA B149.2 - latest editions and amendments may be used.

If a flexible liner is to be used, it must be made of the proper materials:

- For most residential applications, an aluminum liner should be acceptable.
- If the combustion air supplied to the furnace will be contaminated with compounds containing chlorine or fluorine, a liner of AL 29-4C stainless steel should be used. Common sources of chlorine and fluorine compounds include indoor swimming pools and chlorine bleaches, paint strippers, adhesives, paints, varnishes, sealers, waxes (which are not yet dried) and solvents used during construction and remodeling. Various commercial and industrial processes may also be sources of chlorine/fluorine compounds.
- Heavier gauge 300 and 400 series stainless steel liners were developed for use with oil or solid fuel appliances. They are not suitable for use with gas-fired appliances. Flexible liners specifically intended and tested for gas applications are listed in the UL "Gas and Oil Equipment Directory". (UL Standard 1777).

For sizing of flexible liners, see Note 22 and the tables in the National Fuel Gas Code NFPA 54/ANSI Z223.1 - latest edition and in the National Standard of Canada, CAN/CSA B149.1 and CAN/CSA B149.2 - latest editions and amendments.

To install the liner, read and follow the liner manufacturer's instructions and your local codes. Excess liner length should be pulled out of the chimney and cut off. Use caution when doing this, as the cut edges of flexible liners may be sharp. Do not spiral excess liner inside of the chimney. Support the liner as recommended by the liner manufacturer.

Some manufacturers of flexible liners offer an insulation sleeve designed to be added to the liner before it is installed in the chimney. (Poured insulation, either vermiculite or other materials, is no longer recommended.) Insulation will need to be added to the flexible liner if:

- It is required by the liner manufacturer's instructions.
- The previous liner was properly sized and installed, and suffered from condensation damage.
- It is required by your local building codes.

Even if none of those three conditions exist which require additional liner insulation, the installer may wish to consider it if:

- The local climate is very cold.
- The chimney is very tall.
- The vent connectors used are very long or have a large number of elbows.
- Local experience indicates that flexible liners installed without insulation are likely to have condensation problems.

Insulation must be selected and installed in accordance with the liner manufacturer's instructions.

Finally, cap the chimney and terminate the liner in accordance with the liner manufacturer's instructions.

Electrical Connections

WARNING

HIGH VOLTAGE !

To avoid the risk of electrical shock, wiring to the unit must be polarized and grounded.

WARNING

HIGH VOLTAGE !

To avoid personal injury or death due to electrical shock, disconnect electrical power before servicing or changing any electrical wiring.

CAUTION

Label all wires prior to disconnection when servicing controls. Wiring errors can cause improper and dangerous operation. Verify proper operation after servicing.

WARNING

HIGH VOLTAGE !

To avoid the risk of injury, electrical shock or death, the furnace must be electrically grounded in accordance with local codes or in their absence, with the latest edition of the National Electric Code.

Wiring Harness

The wiring harness is an integral part of this furnace. Field alteration to comply with electrical codes should not be required. Wires are color coded for identification purposes. Refer to the wiring diagram for wire routings. If any of the original wire as supplied with the furnace must be replaced, it must be replaced with wiring material having a temperature rating of at least 105° C. Any replacement wiring must be a copper conductor.

115 Volt Line Connections

Before proceeding with electrical connections, ensure that the supply voltage, frequency, and phase correspond to that specified on the unit rating plate. Power supply to the furnace must be NEC Class 1, and must comply with all applicable codes. The furnace must be electrically grounded in accordance with local codes or, in their absence, with the latest edition of The National Electric Code, ANSI NFPA 70 and/or The Canadian Electric Code CSA C22.1.

Use a separate fused branch electrical circuit containing properly sized wire, and fuse or circuit breaker. The fuse or circuit breaker must be sized in accordance with the maximum overcurrent protection specified on the unit rating plate. An electrical disconnect must be provided at the furnace location.

Line voltage wiring must enter into the junction box provided with the furnace.

NOTE: Line polarity must be observed when making field connections.

Fossil Fuel Applications

This furnace can be used in conjunction with a heat pump in a fossil fuel application. A fossil fuel application refers to a combined gas furnace and heat pump installation which uses an outdoor temperature sensor to determine the most cost efficient means of heating (heat pump, gas furnace, or both).

A heat pump thermostat with *two stages of heat* is required to properly use a furnace in conjunction with a heat pump. Refer to the fossil fuel kit installation instructions for additional thermostat requirements.

Strictly follow the wiring guidelines in the fossil fuel kit installation instructions. All furnace connections must be made to the furnace integrated control module and the FURNACE terminal strip on the fossil fuel control board.

Junction Box Relocation

WARNING

Edges of sheet metal holes may be sharp. Use gloves as a precaution when removing hole plugs.

Line voltage connections can be made through either the right or left side panel. The furnace is shipped configured for a right side electrical connection. To make electrical connections through the opposite side of the furnace, the junction box must be relocated to the left side prior to making electrical connections. To relocate the junction box, perform the following steps.

WARNING

To prevent personal injury or death due to electric shock, disconnect electrical power before installing or servicing this unit.

1. Remove both doors from the furnace.
2. Remove and save the screws holding the junction box to the right side of the furnace.
3. Models that have the junction box located in the burner compartment will need to move the junction box directly over.
4. Attach the junction box to the left side of the furnace, using the screws removed in step 2.
5. Check the location of the wiring. Confirm that it will not be damaged by heat from the burners or by the rotation of the fan. Also confirm that wiring location will not interfere with filter removal or other maintenance.

After the junction box is in the desired location, use washers to connect field-supplied conduit to the junction box in accordance with NEC and local codes. Connect hot, neutral, and ground wires as shown in the furnace wiring diagram. The wires and ground screw are located in the furnace junction box.

NOTE: In downflow applications the power leads should be routed through the supplied wire tabs when rotating junction box to the left side.

Low voltage wires may be connected to the terminal strip.

IMPORTANT NOTE: To avoid possible equipment malfunction, route the low voltage wires to avoid interference with filter removal or other maintenance.

WARNING

HIGH VOLTAGE !

To avoid the risk of injury, electrical shock or death, the furnace must be electrically grounded in accordance with local codes or in their absence, with the latest edition of the National Electric Code.

To ensure proper unit grounding, the ground wire should run from the furnace ground screw located inside the furnace junction box all the way back to the electrical panel. **NOTE:** Do not use gas piping as an electrical ground. To confirm proper unit grounding, turn off the electrical power and perform the following check.

1. Measure resistance between the neutral (white) connection and one of the burners.
2. Resistance should measure 10 ohms or less.

This furnace is equipped with a blower door interlock switch which interrupts unit voltage when the blower door is opened for servicing. Do not defeat this switch.

24 Volt Thermostat Wiring

NOTE: Wire routing must not interfere with circulator blower operation, filter removal, or routine maintenance.

Low voltage connections can be made through either the right or left side panel. Thermostat wiring entrance holes are located in the blower compartment. The following figure shows connections for a “heat only” system and “heat/cool system”.

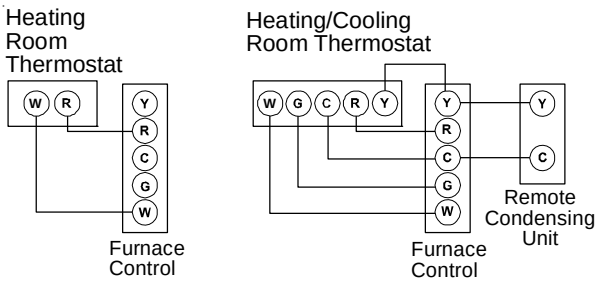

Typical Field Wiring (24 VAC Control Circuit)

This furnace is equipped with a 40 VA transformer to facilitate use with most cooling equipment. Consult the wiring diagram, located on the blower compartment door, for further details of 115 Volt and 24 Volt wiring.

A single-stage thermostat with only one heating stage can be used to control this furnace.

DM80HE Furnace with 2-Stage Condenser Field Wiring

The DM80HE model furnaces may be used with a 2-stage outdoor air conditioner. A two stage cooling/single stage gas heat thermostat is required, in addition to a field supplied relay. The relay must have a 24VAC coil and contacts rated for up to 1 horse power at 125VAC.

1. Install the field supplied relay on the control mounting panel near the furnace ignition control. The relay should be installed such that the motor leads will reach the relay contact terminals.
2. Connect the “Y2” (high stage cool) thermostat terminal to one coil terminal of the field supplied relay. Connect the other field supplied relay coil terminal to the “C” terminal on the furnace ignition control. Typical 18AWG thermostat wire may be used.
3. Connect the common terminal of the field supplied relay to the “LINE-H” terminal on the furnace ignition control. Use wiring having copper conductors only and a temperature rating of at least 105°C.
4. Using the DM80HE airflow tables in this manual, determine the motor speed tap needed to deliver the required high stage cooling airflow. Connect the selected motor speed tap to the normally open terminal on the field supplied relay. Use wiring having copper conductors only and a temperature rating of at least 105°C.
5. See the wiring schematic below.

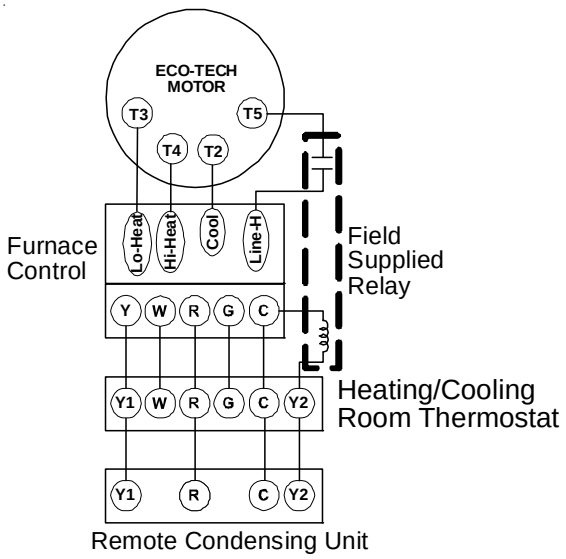

Field Wiring for DM80HE Furnace with 2-Stage Condenser

Setting the Heat Anticipator

The following method should be used in measuring the amp draw of the control circuit to assure proper adjustment of the thermostat heat anticipator

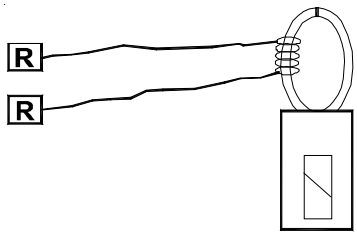

- Wrap the “R” leg around a clip-on ammeter 10 times.
- Energize the furnace in the heat mode.
- Record the reading.
- Divide this reading by 10.
- Set the heat anticipator on the thermostat to match this reading.

Example: If the reading on the ammeter is “4”, divide this by 10. The anticipator setting will be .4 amps.

115 Volt Line Connection of Accessories

Electronic Air Cleaner

(DM80HE, DD80HS & DM80HS MODELS ONLY)

WARNING

HIGH VOLTAGE !

To avoid personal injury or death due to electrical shock, disconnect electrical power before servicing or changing any electrical wiring.

The furnace integrated control module is equipped with line voltage accessory terminals for controlling power to an optional field-supplied electronic air cleaner.

The accessory load specifications are as follows:

Electronic Air Cleaner	1.0 Amp maximum at 120 VAC

Turn OFF power to the furnace before installing any accessories. Follow the air cleaner manufacturers' instructions for locating, mounting, grounding, and controlling these accessories. Accessory wiring connections are to be made through the 1/4" quick connect terminals provided on the furnace integrated control module. The electronic air cleaner hot terminal is identified as EAC-H and the neutral terminal is identified as NEUTRAL. All field wiring must conform to applicable codes. Connections should be made as shown in the following illustration.

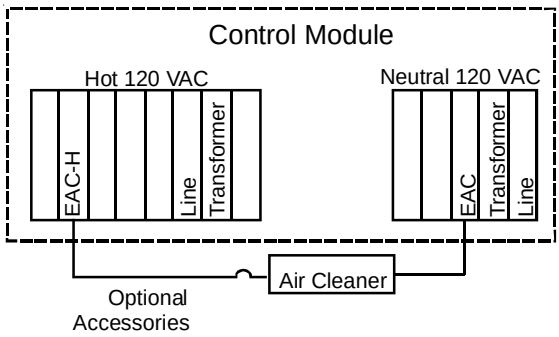

DM80HE, DD80HS & DM80HS MODELS ONLY

If it is necessary for the installer to supply additional line voltage wiring to the inside of the furnace, the wiring must conform to all local codes, and have a minimum temperature rating of 105°C. All line voltage wire splices must be made inside the furnace junction box.

The integrated control module electronic air cleaner terminals (EAC) are energized with 115 volts whenever the circulator blower is energized.

24 VAC Humidifier

The yellow wire connected to the I.D. Blower pressure switch is powered anytime the pressure switch is closed and provides 24 VAC humidifier control. Remove the yellow wire and connect a field supplied jumper wire with a "piggyback" terminal to the pressure switch terminal. Reconnect the yellow wire to the "piggyback" terminal on the jumper wire and then connect the 24 VAC line of the humidifier to the stripped end of the jumper wire. Using a wire nut or a field-supplied quick connect terminal can make this connection. The wiring must conform to all local and national codes. Connect the COM side of the humidifier to the B/C terminal on the furnace control board (or to the COM side of the 24 VAC transformer). **DO NOT CONNECT 115V HUMIDIFIER TO THESE TERMINALS.**

Gas Supply and Piping

The furnace rating plate includes the approved furnace gas input rating and gas types. The furnace must be equipped to operate on the type of gas applied. This includes any conversion kits required for alternate fuels and/or high altitude.

NOTE: Do no remove the gas valve inlet plug before the gas line is installed. Replace if water or debris has been introduced.

CAUTION

TO PREVENT UNRELIABLE OPERATION OR EQUIPMENT DAMAGE, THE INLET GAS SUPPLY PRESSURE MUST BE AS SPECIFIED ON THE UNIT RATING PLATE WITH ALL OTHER HOUSEHOLD GAS FIRED APPLIANCES OPERATING.

Inlet gas supply pressures must be maintained within the ranges specified in the following table. The supply pressure must be constant and available with all other household gas fired appliances operating. The minimum gas supply pressure must be maintained to prevent unreliable ignition. The maximum must not be exceeded to prevent unit overfiring.

INLET GAS SUPPLY PRESSURE		
Natural Gas	Minimum: 4.5" w.c.	Maximum: 10.0" w.c.
Propane Gas	Minimum: 11.0" w.c.	Maximum: 13.0" w.c.

NOTE: Adjusting the minimum supply pressure below the limits in the above table could lead to unreliable ignition. Gas input to the burners must not exceed the rated input shown on the rating plate. Overfiring of the furnace can result in premature heat exchanger failure. Gas pressures in excess of 13 inches water column can also cause permanent damage to the gas valve.

At all altitudes, the manifold pressure must be within 0.3 inches w.c. of that listed in the Specification Sheet applicable to your model for the fuel used. At all altitudes and with either fuel, the air temperature rise must be within the range listed on the furnace nameplate. Should this appliance be converted to LP, refer to the instructions included in the factory authorized LP conversion kit.

High Altitude Derate

IMPORTANT NOTE: The furnace, as shipped, requires no change to run between 0 - 5500 feet. Do not attempt to increase the firing rate by changing orifices or increasing the manifold pressure below 5500 feet. This can cause poor combustion and equipment failure.

High altitude installations above 5500 feet may require both a pressure switch and an orifice change. These changes are necessary to compensate for the natural reduction in the density of both the gas fuel and the combustion air at higher altitude.

For installations above 5500 feet, please refer to your distributor for required kit(s).

Contact the distributor for a tabular listing of appropriate manufacturer's kits for propane gas and/or high altitude installations. The indicated kits must be used to insure safe and proper furnace operation. All conversions must be performed by a qualified installer, or service agency.

Propane Gas Conversion

WARNING

Possible property damage, personal injury or death may occur if the correct conversion kits are not installed. The appropriate kits must be applied to ensure safe and proper furnace operation. All conversions must be performed by a qualified installer or service agency.

This unit is configured for natural gas. The appropriate manufacturer's propane gas conversion kit, must be applied for propane gas installations. Refer to the "Propane Gas and/or High Altitude Installations" section for details.

If converting to LP gas, it is recommended that an LPLP0* kit also be installed. The use of this kit will prevent the furnace from firing when the LP gas supply pressure is too low to support proper combustion.

Models using Single Stage Gas Valves

Altitude	Gas	Kit	Orifice	Manifold Pressure	Pressure Switch
0 - 5500	Natural	None	#45	3.5" w.c.	None
	Propane	LPT-03	#55	10.0" w.c.	

NOTE: DM80SS1405DN** models utilize #43 orifices in Natural gas applications.

Models using 2-Stage Gas Valves

Gas	Altitude	Kit	Orifice	Manifold Pressure		Pressure Switch Change
				High Stage	Low Stage	
Natural	0 - 5500	None	#45	3.5" w.c.	1.9" w.c.	None
Propane		LPM-06	#55	10.0" w.c.	6.0" w.c.	None

NOTE: DM80HS 1405DX models utilize #43 orifices in Natural gas applications.**

Contact your distributor for a tabular listing of appropriate manufacturer's kits for propane gas and/or high altitude installations. The indicated kits must be used to insure safe and proper furnace operation. All conversions must be performed by a qualified installer, or service agency.

Gas Piping Connections

WARNING

To avoid possible unsatisfactory operation or equipment damage due to underfiring of equipment, use the proper size of natural/propane gas piping needed when running pipe from the meter/tank to the furnace.

When sizing a trunk line, be sure to include all appliances which will operate simultaneously.

The gas piping supplying the furnace must be properly sized based on the gas flow required, specific gravity of the gas, and length of the run. The gas line installation must comply with local codes, or in their absence, with the latest edition of the National Fuel Gas Code, NFPA 54/ANSI Z223.1.

Natural Gas Capacity of Pipe
In Cubic Feet of Gas Per Hour (CFH)

Length of Pipe in Feet	Nominal Black Pipe Size				
	1/2"	3/4"	1"	1 1/4"	1 1/2"
10	132	278	520	1050	1600
20	92	190	350	730	1100
30	73	152	285	590	980
40	63	130	245	500	760
50	56	115	215	440	670
60	50	105	195	400	610
70	46	96	180	370	560
80	43	90	170	350	530
90	40	84	160	320	490
100	38	79	150	305	460

(Pressure 0.5 psig or less and pressure drop of 0.3" W.C.; Based on 0.60 Specific Gravity Gas)

$$CFH = \frac{\text{BTUH Furnace Input}}{\text{Heating Value of Gas (BTU/Cubic Foot)}}$$

To connect the furnace to the building's gas piping, the installer must supply a ground joint union, drip leg, manual shutoff valve, and line and fittings to connect to gas valve. In some cases, the installer may also need to supply a transition piece from 1/2" pipe to a larger pipe size.

The following stipulations apply when connecting gas piping.

- Use black iron or steel pipe and fittings for the building piping.
- Use pipe joint compound on male threads only. Pipe joint compound must be resistant to the action of the fuel used.
- Use ground joint unions.
- Install a drip leg to trap dirt and moisture before it can enter the gas valve. The drip leg must be a minimum of three inches long.
- Install a 1/8" NPT pipe plug fitting, accessible for test gage connection, immediately upstream of the gas supply connection to the furnace.
- Use two pipe wrenches when making connection to the gas valve to keep it from turning. The orientation of the gas valve on the manifold must be maintained as shipped from the factory.
- Install a manual shutoff valve between the gas meter and unit within six feet of the unit. If a union is installed, the union must be downstream of the manual shutoff valve, between the shutoff valve and the furnace.

- Tighten all joints securely.
- Connect the furnace to the building piping by one of the following methods:
  - Rigid metallic pipe and fittings.
  - Semi-rigid metallic tubing and metallic fittings. Aluminum alloy tubing must not be used in exterior locations.
  - Use listed gas appliance connectors in accordance with their instructions. Connectors must be fully in the same room as the furnace.
  - Protect connectors and semi-rigid tubing against physical and thermal damage when installed. Ensure aluminum-alloy tubing and connectors are coated to protect against external corrosion when in contact with masonry, plaster, or insulation, or subjected to repeated wetting by liquids such as water (except rain water), detergents, or sewage.

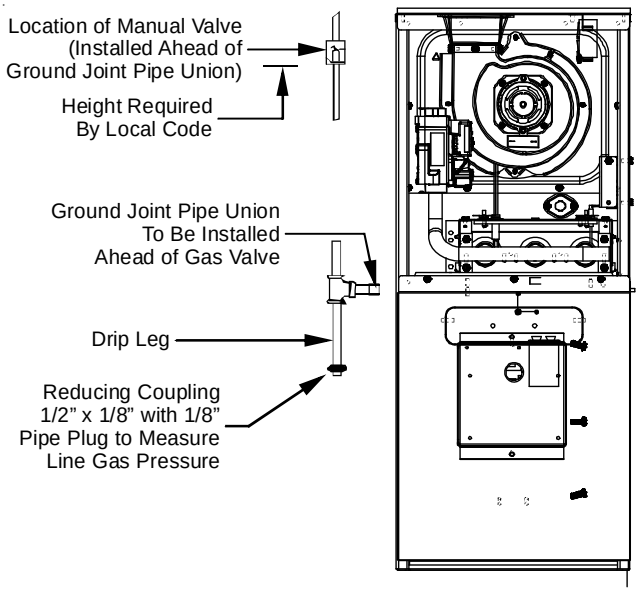

General Furnace Layout

Upflow Installations

A ground joint union, drip leg, and manual shutoff valve must also be supplied by the installer. In some cases, the installer may also need to supply a transition piece from 1/2" to another pipe size.

When the gas piping enters through the left side of the furnace, the installer must supply the following fittings (starting from the gas valve):

- Straight pipe to reach the exterior of the furnace.
- A ground joint union, drip leg, and manual shutoff valve must also be supplied by the installer. In some cases, the installer may also need to supply a transition piece from 1/2 inch to another pipe size.

Counterflow Installations

When the gas piping enters through the left side of the furnace, the installer must supply a straight pipe to reach the exterior of the furnace.

A ground joint union, drip leg and manual shutoff valve must also be supplied by the installer. In most cases, the installer may also need to supply a transition piece from ½" to another pipe size.

Gas Piping Checks

Before placing unit in operation, leak test the unit and gas connections.

WARNING

To avoid the possibility of explosion or fire, never use a match or open flame to test for leaks.

Check for leaks using an approved chloride-free soap and water solution, an electronic combustible gas detector, or other approved testing methods.

CAUTION

To prevent property damage or personal injury due to fire, the following instructions must be performed regarding gas connections, pressure testing, location of shutoff valve and installation of gas piping.

NOTE: Never exceed specified pressures for testing. Higher pressure may damage the gas valve and cause subsequent overfiring, resulting in heat exchanger failure.

Disconnect this unit and shutoff valve from the gas supply piping system before pressure testing the supply piping system with pressures in excess of 1/2 psig (3.48 kPa).

This unit must be isolated from the gas supply system by closing its manual shutoff valve before pressure testing of gas supply piping system with test pressures equal to or less than 1/2 psig (3.48 kPa).

Propane Gas Tanks and Piping

WARNING

If the gas furnace is installed in a basement, an excavated area or confined space, it is strongly recommended to contact a propane supplier to install a gas detecting warning device in case of a gas leak.

- **Since propane gas is heavier than air, any leaking gas can settle in any low areas or confined spaces.**
- **Propane gas odorant may fade, making the gas undetectable except with a warning device.**

A gas detecting warning system is the only reliable way to detect a propane gas leak. Rust can reduce the level of odorant in propane gas. Do not rely on your sense of smell. Contact a local propane gas supplier about installing a gas detecting warning system. If the presence of gas is suspected, follow the instructions on Page 5 of this manual.

All propane gas equipment must conform to the safety standards of the National Board of Fire Underwriters, NBFU Manual 58.

For satisfactory operation, propane gas pressure must be 10 inch WC at the furnace manifold with all gas appliances in operation. Maintaining proper gas pressure depends on three main factors:

1. Vaporization rate, depending on temperature of the liquid, and "wetted surface" area of the container or containers.
2. Proper pressure regulation. (Two-stage regulation is recommended for both cost and efficiency).
3. Pressure drop in lines between regulators, and between second stage regulator and the appliance. Pipe size will depend on length of pipe run and total load of all appliances.

Complete information regarding tank sizing for vaporization, recommended regulator settings, and pipe sizing is available from most regulator manufacturers and propane gas suppliers.

Since propane gas will quickly dissolve white lead and most standard commercial compounds, special pipe dope must be used. Use a pipe thread sealant approved for natural gas and L.P. gas.

Refer to the following illustration for typical propane gas installations and piping.

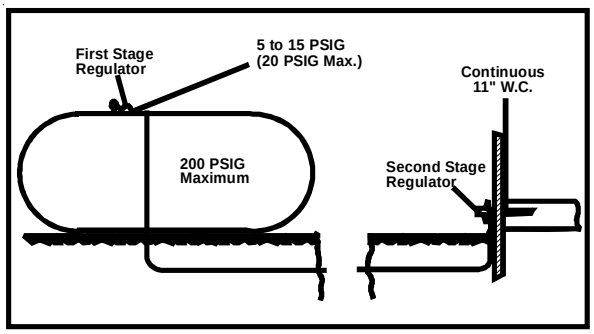

Propane Gas Installation (Typ.)

Propane Gas Piping Charts

Sizing Between First and Second Stage Regulator*
Maximum Propane Capacities listed are based on 2 psig pressure drop at 10 psig setting.
Capacities in 1,000 BTU/hour.

Pipe or Tubing Length, Feet	Tubing Size, O.D. Type L					Nominal Pipe Size Schedule 40	
	3/8"	1/2"	5/8"	3/4"	7/8"	1/2"	3/4"
10	730	1,700	3,200	5,300	8,300	3,200	7,500
20	500	1,100	2,200	3,700	5,800	2,200	4,200
30	400	920	2,000	2,900	4,700	1,800	4,000
40	370	850	1,700	2,700	4,100	1,600	3,700
50	330	770	1,500	2,400	3,700	1,500	3,400
60	300	700	1,300	2,200	3,300	1,300	310
80	260	610	1,200	1,900	2,900	1,200	2,600
100	220	540	1,000	1,700	2,600	1,000	2,300
125	200	490	900	1,400	2,300	900	2,100
150	190	430	830	1,300	2,100	830	1,900
175	170	400	780	1,200	1,900	770	1,700
200	160	380	730	1,100	1,800	720	1,500

Sizing Between Second Stage and Appliance Regulator*
Maximum Propane Capacities listed are based on 2 psig pressure drop at 10 psig setting.
Capacities in 1,000 BTU/hour.

Pipe or Tubing Length, Feet	Tubing Size, O.D. Type L						Nominal Pipe Size Schedule 40				
	3/8"	1/2"	5/8"	3/4"	7/8"	1-1/8"	1/2"	3/4"	1"	1-1/4"	1-1/2"
10	39	92	199	329	501	935	275	567	1,071	2,205	3,307
20	26	62	131	216	346	630	189	393	732	1,496	2,299
30	21	50	107	181	277	500	152	315	590	1,212	1,858
40	19	41	90	145	233	427	129	267	504	1,039	1,559
50	18	37	79	131	198	376	114	237	448	913	1,417
60	16	35	72	121	187	340	103	217	409	834	1,275
80	13	29	62	104	155	289	89	185	346	724	1,066
100	11	26	55	90	138	255	78	162	307	630	976
125	10	24	48	81	122	224	69	146	275	567	866
150	9	21	43	72	109	202	63	132	252	511	787
200	8	19	39	66	100	187	54	112	209	439	665
250	8	17	36	60	93	172	48	100	185	390	590

Circulating Air and Filters

Ductwork - Air Flow

WARNING

NEVER ALLOW THE PRODUCTS OF COMBUSTION, INCLUDING CARBON MONOXIDE, TO ENTER THE RETURN DUCT WORK OR CIRCULATION AIR SUPPLY.

Duct systems and register sizes must be properly designed for the CFM and external static pressure rating of the furnace. Ductwork should be designed in accordance with the recommended methods of "Air Conditioning Contractors of America" Manual D.

A duct system must be installed in accordance with Standards of the National Board of Fire Underwriters for the Installation of Air Conditioning, Warm Air Heating and Ventilating Systems. Pamphlets No. 90A and 90B.

A closed return duct system must be used, with the return duct connected to the furnace. **NOTE:** Ductwork must never be attached to the back of the furnace. For installations requiring more than 1800 CFM, use a bottom return or two sided return. Supply and return connections to the furnace may be made with flexible joints to reduce noise transmission. To prevent the blower from interfering with combustion air or draft when a central return is used, a connecting duct must be installed between the unit and the utility room wall. Furnace is shipped with the top flanges in the flat position. Before installing a coil or ducts, the flanges must be bent 90°. A room, closet, or alcove must not be used as a return air chamber.

When the furnace is used in connection with a cooling unit, the furnace should be installed in parallel with or on the upstream side of the cooling unit to avoid condensation in the heating element. With a parallel flow arrangement, the dampers or other means used to control the flow of air must be adequate to prevent chilled air from entering the furnace and, if manually operated, must be equipped with means to prevent operation of either unit unless the damper is in the full heat or cool position.

When the furnace is installed without a cooling coil, it is recommended that a removable access panel be provided in the outlet air duct. This opening shall be accessible when the fur-

nace is installed and shall be of such a size that the heat exchanger can be viewed for visual light inspection or such that a sampling probe can be inserted into the airstream. The access panel must be made to prevent air leaks when the furnace is in operation.

NOTE: In a horizontal installation the air conditioning coil must be adequately supported by proper brackets and supports. Inadequate coil support can result in furnace cabinet distortion and air leakage.

When the furnace is heating, the temperature of the return air entering the furnace must be between 55°F and 100°F.

When a furnace is installed so that supply ducts carry air circulated by the furnace to areas outside the space containing the furnace, the return air shall also be handled by a duct sealed to the furnace casing and terminating outside the space containing the furnace.

Checking Duct Static

Refer to your furnace rating plate for the maximum ESP (external duct static) rating.

Total external static refers to everything external to the furnace cabinet. Cooling coils, filters, ducts, grilles, registers must all be considered when reading your total external static pressure. The supply duct pressure must be read between the furnace and the cooling coil. This reading is usually taken by removing the “A” shaped block off plate from the end on the coil; drilling a test hole in it and reinstalling the block off plate. Take a duct static reading at the test hole. Tape up the test hole after your test is complete. The negative pressure must be read between the filter and the furnace blower.

Too much external static pressure will result in insufficient air that can cause excessive temperature rise. This can cause limit switch tripping and heat exchanger failure.

To determine total external duct static pressure, proceed as follows;

1. With clean filters in the furnace, use a draft gauge (inclined manometer) to measure the static pressure of the return duct at the inlet of the furnace. (Negative Pressure)
2. Measure the static pressure of the supply duct. (Positive Pressure)
3. The difference between the two numbers is .4” w.c.

Example:
static reading from return duct = -.1" w.c.
static reading from supply duct = .3" w.c.
total external static pressure on this system = .4" w.c.

NOTE: Both readings may be taken simultaneously and read directly on the manometer if so desired. If an air conditioner coil or Electronic Air Cleaner is used in conjunction with the furnace, the readings must also include theses components, as shown in the following drawing.

4. Consult proper tables for the quantity of air.

If the total external static pressure exceeds the maximum listed on the furnace rating plate, check for closed dampers, registers, undersized and/or oversized poorly laid out duct work.

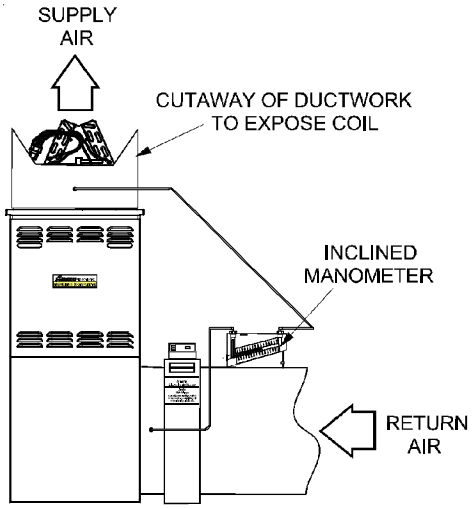

Checking Static Pressure
(80% Furnace Shown, 90% Similar)

Filters - Read This Section Before Installing The Return Air Ductwork

Filters must be used with this furnace. Discuss filter maintenance with the building owner. Filters do not ship with this furnace, but must be provided by the installer. Filters must comply with UL900 or CAN/ULCS111 standards. If the furnace is installed without filters, the warranty will be voided.

NOTE: An undersized opening will cause reduced airflow. The bottom return is set up as a knock out.

Upright Installations

Depending on the installation and/or customer preference, differing filter arrangements can be applied. Filters can be installed in the central return register or a side panel external filter rack kit (upflows), or the ductwork above a downflow furnace. As an alternative, a media air filter or electronic air cleaner can be used as the primary filter.

Circulation Air Filters

One of the most common causes of a problem in a forced air heating system is a blocked or dirty filter. Circulating air filters must be inspected monthly for dirt accumulation and replaced if necessary. Failure to maintain clean filters can cause premature heat exchanger failure.

A new home may require more frequent replacement until all construction dust and dirt is removed. Circulating air filters are to be installed in the return air duct external to the furnace cabinet.

MINIMUM FILTER SIZES for DISPOSABLE FILTERS

FURNACE INPUT	FILTER SIZE
40M	320 in^2
60M	483 in^2
80M	640 in^2
100M	800 in^2
120M	738 in^2
140M	738 in^2

DISPOSABLE NOMINAL 300 F.M. FACE VELOCITY

HORIZONTAL INSTALLATIONS

Filters must be installed in either the central return register or in the return air duct work.

SEQUENCE OF OPERATION (INTEGRATED IGNITION CONTROL)

Refer to Timing Charts for sequencing.

NOTE: DIP switch positions referenced in this section applies to DD80HS and DM80HS models only.

POWER UP

- 115 VAC power applied to furnace.
- Integrated ignition control performs internal checks.
- Integrated ignition LED will light.
- Integrated ignition control monitors safety circuits continuously.
- Furnace awaits call from thermostat.

HEATING MODE

(MODE DIP SWITCH IS SET TO "1 STG" POSITION)

The normal operational sequence in heating mode is as follows:

- R and W thermostat contacts close, initiating a call for heat.
- Integrated control module performs safety circuit checks.
- Induced draft blower is energized for 15 second pre-purge period causing pressure switch contacts to close.
- Igniter warm up begins after 15 second prepurge expires.
- Low and high-stage gas valves open at end of igniter warm up period, delivering gas to burners and establishing flame.
- Integrated control module monitors flame presence. Gas valve will remain open only if flame is detected.
- Circulator blower is energized on high heat speed following a fixed thirty second blower on delay. Electronic air cleaner terminals are energized with circulator blower.
- Furnace operates; integrated control module monitors safety circuits continuously.
- R and W thermostat contacts open, completing the call for heat.
- Gas valve closes, extinguishing flame.
- Induced draft blower is de-energized following a fifteen second post purge.
- The circulator blower remains on high speed for the selected heat off delay period.
- Furnace awaits the next call from thermostat.

(MODE DIP SWITCH IS SET TO "2 STG" POSITION)

The normal operational sequence in sequence is as follows:

- R and W thermostat contacts close, initiating a call for heat.
- Integrated control module performs safety circuit checks.
- Induced draft blower is energized for 15 second prepurge period causing pressure switch contacts to close.
- Igniter warm up begins after 15 second prepurge expires.
- Low and high-stage gas valves open at end of igniter warm up period, delivering gas to burners and establishing flame.
- High-stage gas valve closes after five seconds; low-stage gas valve remains open.
- Integrated control module monitors flame presence. Gas valve will remain open only if flame is detected.
- Circulator blower is energized on low heat speed following a fixed thirty second blower on delay. Electronic air cleaner terminals are energized with circulator blower.
- Furnace is now operating in low-stage heating mode.
- Furnace operates; integrated control module monitors safety circuits continuously.
- If low-stage delay period expires, control will shift operation from low-stage heating mode operation to high-stage heating mode operation. Control will energize circulator blower high heat speed and high stage gas valve.
- Furnace is now operating in high-stage heating mode.
- R and W thermostat contacts open, completing the call for heat.
- Induced draft blower is de-energized following a fifteen second post purge.
- Circulator blower is de-energized following a heat off delay period (selectable 100 or 150 seconds; factory set at 150 seconds).

  If the furnace is operating in the low-stage heating mode when thermostat contacts open, circulator remains at low heat speed for the selected delay off period.

  If the furnace is operating in high-stage heating mode when the thermostat contacts open, the circulator blower remains at high heat speed for the selected heat off delay period.
- Furnace awaits the next call from thermostat.

Cooling Mode

The normal operational sequence in cooling mode is as follows:

- R and Y thermostat contacts close, initiating a call for cool.
- Integrated control module performs safety circuit checks.
- Outdoor fan and compressor are energized.
- Circulator blower is energized on cool speed following a fixed five second on delay. Electronic air cleaner terminals are energized with circulator blower.
- Furnace circulator blower and outdoor cooling unit run, integrated control module monitors safety circuits continuously.
- R and Y thermostat contacts open, completing the call for cool.
- Outdoor fan and compressor are de-energized.
- Circulator blower is de-energized following a fixed forty five second cool off delay period. Electronic air cleaner terminals are de-energized.
- Furnace awaits the next call from thermostat.

Fan Only Mode

The normal operational sequence in fan only mode is as follows:

- R and G thermostat contacts close, initiating a call for fan.
- Integrated control module performs safety circuit checks.
- Circulator blower is energized on low heat speed. Electronic air cleaner terminals are energized.
- Circulator blower runs, integrated control module monitors safety circuits continuously.
- R and G thermostat contacts open, completing the call for fan.
- Circulator blower is de-energized. Electronic air cleaner terminals are de-energized.
- Furnace awaits the next call from thermostat.

Start-up Procedure And Adjustment

Furnace must have a 115 VAC power supply properly connected and grounded. Proper polarity must be maintained for correct operation. An interlock switch prevents furnace operation if the blower door is not in place. Keep the blower access door in place except for inspection and maintenance.

This furnace is also equipped with a self-diagnosing electronic control module. In the event a furnace component is not operating properly, the control module LED will flash on and off in a factory-programmed sequence, depending on the problem encountered. This light can be viewed through the observation window in the blower access door. Refer to the *Troubleshooting Chart* for further explanation of the lighting codes.

Follow the start-up and adjustment items, refer to further information in *Section XIII, Operational Checks* (see table of contents, pages 2-3 for page number)..

Furnace Operation

Purge gas lines of air prior to start-up. Do not purge lines into an enclosed burner compartment.

Check for leaks using an approved chloride-free soap and water solution, an electronic combustible gas detector, or other approved method. Verify that all required kits (propane gas, high altitude, etc.) have been appropriately installed.

NOTE: An interlock switch prevents furnace operation if the blower door is not in place. Keep the blower access doors in place except for inspection and maintenance.

Furnace Start-up

1. Close the manual gas shutoff valve external to the furnace.
2. Turn off the electrical power to the furnace.
3. Set the room thermostat to the lowest possible setting.
4. Remove the burner compartment door.

NOTE: This furnace is equipped with an ignition device which automatically lights the burner. Do not try to light the burner by hand.

5. *White-Rodgers valves* Push the switch to the OFF position.

   Honeywell valves : Slide the switch to the OFF position.
6. Wait five minutes to clear out any gas. Then smell for gas, including near the floor.
7. If gas can be smelled following the five minute waiting period in Step 6, immediately follow the instructions on Page 3 of this manual. If you do not smell gas after five minutes:

   White-Rodgers valves : Push the switch to the ON position.

   Honeywell valves : Slide the switch to the ON position.
8. Replace the door on the front of the furnace.
9. Open the manual gas valve external to the furnace.
10. Turn on the electrical power supply to the furnace.
11. Set the room thermostat to the desired temperature.

NOTE: There is an approximate 30 second delay between thermostat energizing and burner firing.

Furnace Shutdown

1. Set the thermostat to lowest setting.
2. Turn off the electrical power supply to the furnace.
3. Set the room thermostat to the lowest possible setting.
4. Remove the burner compartment door.

5. *White-Rodgers valve :* Push switch to the OFF position.
   Honeywell valve : Slide the switch to the OFF position.
6. Close manual gas shutoff valve external to the furnace.
7. Replace the door on the unit.

GAS SUPPLY PRESSURE MEASUREMENT

CAUTION

TO PREVENT UNRELIABLE OPERATION OR EQUIPMENT DAMAGE, THE INLET GAS SUPPLY PRESSURE MUST BE AS SPECIFIED ON THE UNIT RATING PLATE WITH ALL OTHER HOUSEHOLD GAS FIRED APPLIANCES OPERATING.

WARNING

HIGH VOLTAGE !

DISCONNECT ALL POWER BEFORE SERVICING OR INSTALLING THIS UNIT. MULTIPLE POWER SOURCES MAY BE PRESENT. FAILURE TO DO SO MAY CAUSE PROPERTY DAMAGE, PERSONAL INJURY OR DEATH.

MODELS USING SINGLE STAGE GAS VALVES

The line pressure supplied to the gas valve must be within the range specified below. The supply pressure can be measured at the gas valve inlet pressure tap or at a hose fitting installed in the gas piping drip leg. The supply pressure must be measured with the unit OFF. To measure inlet pressure, use the following procedure.

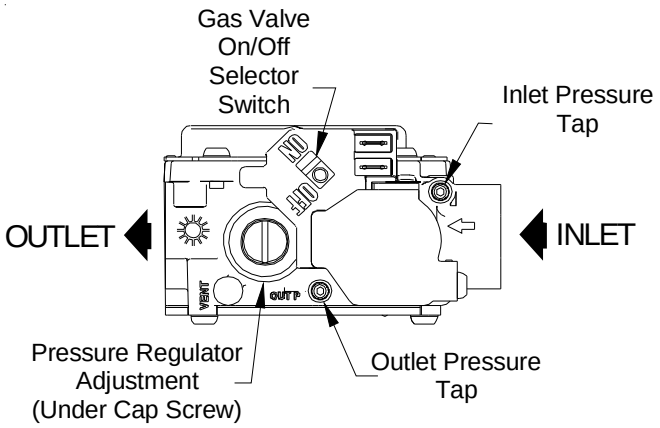

White-Rodgers Model 36J22

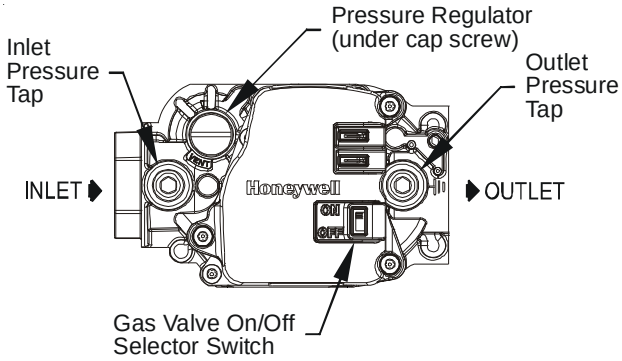

Honeywell Model VR8215 (Single-Stage)

1. Turn OFF gas to furnace at the manual gas shutoff valve external to the furnace.
2. Turn OFF all electrical power to the system.
3. Inlet pressure tap connections:
   a. Honeywell Valve:
      Remove the inlet pressure tap plug. Install an 1/8" NPT hose barb fitting into the outlet pressure tap.
   b. White-Rodgers valve:
      Back inlet pressure test screw (inlet pressure tap) out one turn (counterclockwise, not more than one turn).
4. Attach a hose and manometer to the outlet pressure barb fitting (Honeywell valve) or inlet pressure tap (White-Rodgers valve).
5. Turn ON the gas supply.
6. Turn On power and close thermostat "R" and "W" contacts to provide a call for heat.
7. Using a leak detection solution or soap suds, check for leaks at outlet pressure tap plug (Honeywell valve) or screw (White-Rodgers valve). Bubbles forming indicate a leak. SHUT OFF GAS AND REPAIR ALL LEAKS IMMEDIATELY!
8. Measure the gas supply pressure with burners firing. Adjust supply pressure using the *Inlet Gas Supply Pressure* table shown below. If supply pressure reading differs from the table, make necessary adjustments to pressure regulator, gas piping size, etc., and/or consult with local gas utility.

INLET GAS SUPPLY PRESSURE		
Natural Gas	Minimum: 4.5" w.c.	Maximum: 10.0" w.c.
Propane Gas	Minimum: 11.0" w.c.	Maximum: 13.0" w.c.

9. Turn OFF all electrical power and gas supply to the system.
10. Remove the manometer hose from the hose barb fitting or inlet pressure tap.
11. Replace inlet pressure tap:
    a. Honeywell valve:
       Remove the 1/8" NPT hose barb fitting from the inlet pressure tap. Replace the inlet pressure tap plug and seal with a high quality thread sealer.

b. White-Rodgers valve:
   Turn inlet pressure test screw in to seal pressure port (clockwise, 7 in-lb minimum).

12. Retest for leaks. If bubbles form, shut down gas and repair leaks immediately.
13. Turn ON electrical power and gas supply to the system.
14. Turn valve switch ON.

Models using Two Stage Gas Valves

CAUTION

To prevent unreliable operation or equipment damage, the gas manifold pressure must be as specified on the unit rating plate. Only minor adjustments should be made by adjusting the gas valve pressure regulator.

NOTE: When removing a valve adjustment screw or a pressure tap, use a T-25 Torx or 3/16" flathead screwdriver. **DO NOT USE POWER TOOLS.**

The line pressure supplied to the gas valve must be within the range specified below. The supply pressure can be measured at the gas valve inlet pressure tap or at a hose fitting installed in the gas piping drip leg. The supply pressure must be measured with the burners operating. To measure the gas supply pressure, use the following procedure.

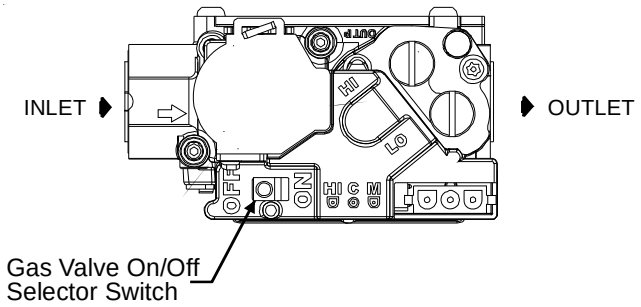

White-Rodgers Model 36G54 (Two-Stage)

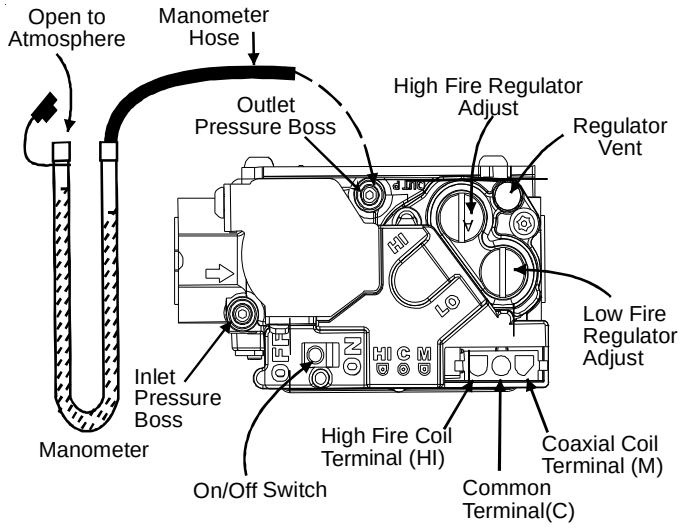

White-Rodgers Model 36J54 Connected to Manometer

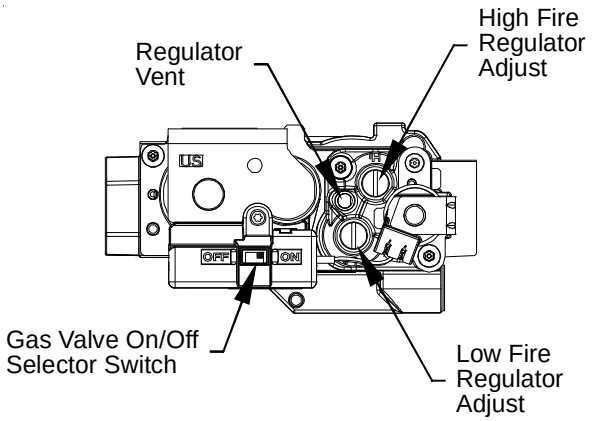

Honeywell Model VR9205 (Two-Stage)

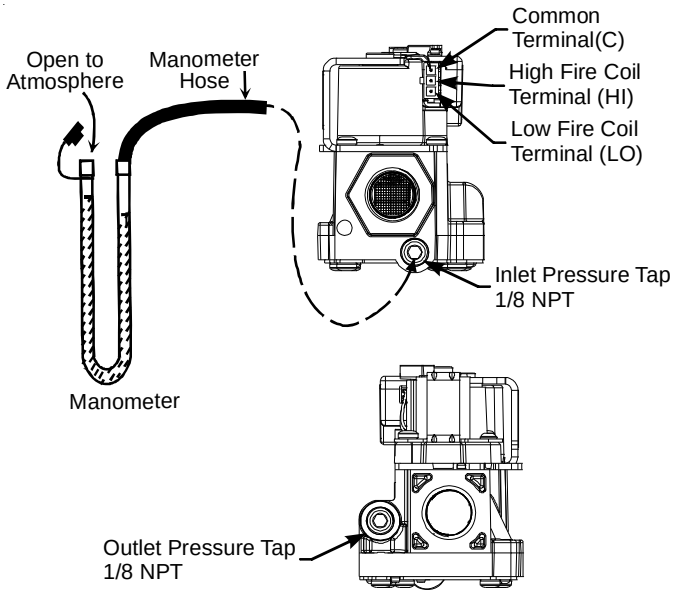

Honeywell Model VR9205 Connected to Manometer

1. Turn OFF gas to furnace at the manual gas shutoff valve external to the furnace.
2. Connect a calibrated water manometer (or appropriate gas pressure gauge) at either the gas valve inlet pressure tap or the gas piping drip leg. See Honeywell gas valve figure or White-Rodgers gas valve figure for location of inlet pressure tap.

NOTE: If measuring gas pressure at the drip leg or Honeywell gas valve, a field-supplied hose barb fitting must be installed prior to making the hose connection. If using the inlet pressure tap on the White-Rodgers gas valve, then use the 36G Valve Pressure Check Kit, Part No. 0151K00000S.

3. Turn ON the gas supply and operate the furnace and all other gas consuming appliances on the same gas supply line.
4. Measure furnace gas supply pressure with burners firing. Supply pressure must be within the range specified in the *Inlet Gas Supply Pressure* table.

INLET GAS SUPPLY PRESSURE		
Natural Gas	Minimum: 4.5" w.c.	Maximum: 10.0" w.c.
Propane Gas	Minimum: 11.0" w.c.	Maximum: 13.0" w.c.

If supply pressure differs from table, make the necessary adjustments to pressure regulator, gas piping size, etc., and/or consult with local gas utility.

5. Turn OFF gas to furnace at the manual shutoff valve and disconnect manometer. Reinstall plug before turning on gas to furnace.
6. Turn OFF any unnecessary gas appliances stated in step 3.

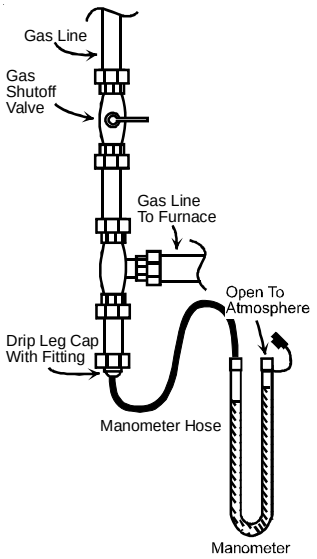

Measuring Inlet Gas Pressure (Alt. Method)

Gas Manifold Pressure Measurement and Adjustment

CAUTION

To prevent unreliable operation or equipment damage, the gas manifold pressure must be as specified on the unit rating plate. Only minor adjustments should be made by adjusting the gas valve pressure regulator.

WARNING

HIGH VOLTAGE !

Disconnect all power before servicing or installing this unit. Multiple power sources may be present. Failure to do so may cause property damage, personal injury or death.

Models using Single Stage Gas Valves

This valve is shipped from the factory with the regulator preset (see control label).

Consult the appliance rating plate to ensure burner manifold pressure is as specified. If another outlet pressure is required, follow these steps.

1. Turn OFF gas to furnace at the manual gas shutoff valve external to the furnace.
2. Turn OFF all electrical power to the system.
3. Outlet pressure tap connections:
   a. Honeywell valve:
      Remove the outlet pressure tap plug. Install an 1/8" NPT hose barb fitting into the outlet pressure tap.
   b. White-Rodgers valve:
      Back outlet pressure test screw (outlet pressure tap) out one turn (counterclockwise, not more than one turn).
4. Attach a hose and manometer to the outlet pressure barb fitting (Honeywell valve) or outlet pressure tap (White-Rodgers valve).
5. Turn ON the gas supply.
6. Turn ON power and close thermostat "R" and "W" contacts to provide a call for heat.
7. Using a leak detection solution or soap suds, check for leaks at outlet pressure tap plug (Honeywell valve) or screw (White-Rodgers valve). Bubbles forming indicate a leak. SHUT OFF GAS AND REPAIR ALL LEAKS IMMEDIATELY!
8. Measure the gas manifold pressure with burners firing. Adjust manifold pressure using the *Manifold Gas Pressure* table shown below.

Manifold Gas Pressure	
Natural Gas	3.5" w.c.
Propane Gas	10.0" w.c.

9. Remove regulator cover screw from the outlet pressure regulator and turn screw clockwise to increase pressure or counterclockwise to decrease pressure. Replace regulator cover screw.
10. Turn OFF all electrical power and gas supply to the system.
11. Remove the manometer hose from the hose barb fitting or outlet pressure tap .
12. Replace outlet pressure tap:
    a. Honeywell valve:
       Remove the 1/8" NPT hose barb fitting from the outlet pressure tap. Replace the outlet pressure tap plug and seal with a high quality thread sealer.
    b. White-Rodgers valve: Turn outlet pressure test screw in to seal pressure port (clockwise, 7 in-lb minimum).
13. Turn ON electrical power and gas supply to the system.
14. Close thermostat contacts to provide a call for heat.
15. Retest for leaks. If bubbles form, SHUT OFF GAS AND REPAIR ALL LEAKS IMMEDIATELY!

Models using Two Stage Gas Valves

CAUTION

To prevent unreliable operation or equipment damage, the gas manifold pressure must be as specified on the unit rating plate. Only minor adjustments should be made by adjusting the gas valve pressure regulator.

Only small variations in gas pressure should be made by adjusting the gas valve pressure regulator. The manifold pressure must be measured with the burners operating. To measure and adjust the manifold pressure, use the following procedure.

1. Turn OFF gas to furnace at the manual gas shutoff valve external to the furnace.
2. Turn off all electrical power to the system.
3. Outlet pressure tap connections:
   a. Honeywell valve: Remove the outlet pressure tap plug. Install an 1/8" NPT hose barb fitting into the outlet pressure tap.
   b. White-Rodgers valve: Back outlet pressure test screw (inlet/outlet pressure tap) out one turn (counterclockwise, not more than one turn).
4. Attach a hose and manometer to the outlet pressure barb fitting (Honeywell valve) or outlet pressure tap (White-Rodgers valve).
5. Turn ON the gas supply.
6. Turn on power and close thermostat “R” and “W1” contacts to provide a call for low stage heat.
7. Measure the gas manifold pressure with burners firing. Adjust manifold pressure using the *Manifold Gas Pressure* table shown below.
8. Remove regulator cover screw from the low (LO) outlet pressure regulator adjust tower and turn screw clockwise to increase pressure or counterclockwise to decrease pressure. Replace regulator cover screw.
9. Close thermostat “R” and “W2” contacts to provide a call for high stage heat.
10. Remove regulator cover screw from the high (HI) outlet pressure regulator adjust tower and turn screw clockwise to increase pressure or counterclockwise to decrease pressure. Replace regulator cover screw.
11. Turn off all electrical power and gas supply to the system.
12. Remove the manometer hose from the hose barb fitting or outlet pressure tap .
13. Replace outlet pressure tap:
    a. Honeywell valve: Remove the 1/8" NPT hose barb fitting from the outlet pressure tap. Replace the outlet pressure tap plug and seal with a high quality thread sealer.
    b. White-Rodgers valve: Turn outlet pressure test screw in to seal pressure port (clockwise, 7 in-lb minimum).
14. Turn on electrical power and gas supply to the system.
15. Close thermostat contacts “R” and “W1/W2” to energize the valve.

Using a leak detection solution or soap suds, check for leaks at outlet pressure tap plug (Honeywell valve) or screw (White-Rodgers valve). Bubbles forming indicate a leak. SHUT OFF GAS AND REPAIR ALL LEAKS IMMEDIATELY!

NOTE: For gas to gas conversion, consult your dealer for appropriate conversion.

Manifold Gas Pressure			
Gas		Range	Nominal
Natural	Low Stage	1.6 - 2.2" w.c.	1.9" w.c.
	High Stage	3.2 - 3.8" w.c.	3.5" w.c.
Propane	Low Stage	5.7 - 6.3" w.c.	6.0" w.c.
	High Stage	9.7 - 10.3" w.c.	10.0" w.c.

Gas Input Rate Measurement (Natural Gas Only)

The gas input rate to the furnace must never be greater than that specified on the unit rating plate. To measure natural gas input using the gas meter, use the following procedure.

1. Turn OFF the gas supply to all other gas-burning appliances except the furnace.
2. While the furnace is operating, time and record one complete revolution of the smallest gas meter dial.
3. Calculate the number of seconds per cubic foot (sec/ ft^3) of gas being delivered to the furnace. If the dial is a one cubic foot dial, divide the number of seconds recorded in step 2 by one. If the dial is a two cubic foot dial, divide the number of seconds recorded in step 2 by two.
4. Calculate the furnace input in BTUs per hour (BTU/ hr). Input equals the installation’s gas heating value multiplied by a conversion factor (hours to seconds), divided by the number of seconds per cubic foot. The measured input must not be greater than the input indicated on the unit rating plate.

   EXAMPLE:

   Installation’s gas heating (HTG) value: 1,000 BTU/ft^3 (Obtained from gas supplier)

   Installation’s seconds per cubic foot: 34 sec/ ft^3

   Conversion Factor (hours to seconds): 3600 sec/hr

   Input = (Htg. value x 3600) ÷ seconds per cubic foot

   Input = (1,000 BTU/ft^3 x 3600 sec/hr) ÷ 34 sec/ ft^3

   Input = 106,000 BTU/hr

   This measured input must not be greater than the input indicated on the unit rating plate.
5. Turn ON gas and relight appliances turned off in step 1. Ensure all the appliances are functioning properly and that all pilot burners are operating.

Temperature Rise

Air temperature rise is the temperature difference between supply and return air. The proper amount of temperature rise is usually obtained when the unit is operated at the rated input with the “as shipped” blower speed. If the correct amount of temperature rise is not obtained, it may be necessary to change the blower speed.

An incorrect temperature rise can cause condensing in or overheating of the heat exchanger. Determine and adjust the temperature rise as follows. The temperature rise must be within the range specified on the rating plate or Specification Sheet applicable to your model. *(Please contact your distributor or our website for the applicable Specification Sheet referred to in this manual.)*

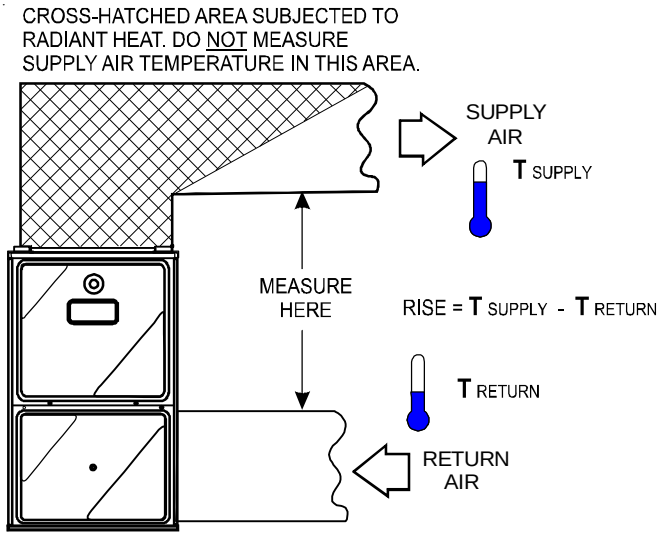

Temperature Rise Measurement

1. Operate furnace with burners firing approximately 15 minutes. Ensure all registers are open and all duct dampers are in their final (fully or partially open) position.
2. Place thermometers in the return and supply ducts as close to the furnace as possible. Thermometers must not be influenced by radiant heat by being able to "see" the heat exchanger.
3. Subtract the return air temperature from the supply air temperature to determine the air temperature rise. Allow adequate time for thermometer readings to stabilize.
4. Adjust temperature rise by adjusting the circulator blower speed. Increase blower speed to reduce temperature rise. Decrease blower speed to increase temperature rise. Refer to the following section for speed changing details.

Circulator Blower Speed Adjustment

WARNING

To avoid personal injury or death due to electrical shock, turn OFF power to the furnace before changing speed taps.

Furnaces are equipped with either a PSC or EEM circulator blower motor. Either blower provides ease in adjusting blower speeds. Refer to the Blower Performance Data in the back of the manual for proper selection of heating and cooling speeds. The cooling blower speed is shipped set on HIGH. The heat blower speed for DM80SS / DD80SS models is shipped on MEDIUM. For DM80HS / DD80HS models high heat ships on MEDIUM and low heat is shipped on MEDIUM-LO. For DM80HE models high heat ships on MEDIUM-HI (T4) and low heat is shipped on MEDIUM (T3). These blower speeds should be adjusted by the installer to match the installation requirements so as to provide the correct heating temperature rise and the correct cooling CFM.

To adjust the circulator blower speed, proceed as follows:

1. Turn OFF power to the furnace.
2. Select the heating and cooling blower speeds that match the installation requirements from the airflow table in the Specification Sheet applicable to your model. (Please *contact your distributor or our website for the applicable Specification Sheet referred to in this manual.)*
3. Relocate desired motor leads to the circulator blower heat and cool speed terminals on the integrated control module. (Terminals are identified as LO HEAT, HI HEAT and COOL (hot)) for DM80HS and DD80HS models and HEAT and COOL for DM80SS and DD80SS models). If a heating speed and the cooling speed are the same, a jumper wire must be used between the heat and cool terminals.
4. Connect all unused blower motor leads to the "PARK" terminals on the integrated control module. Any leads not connected to the "PARK" terminals must be taped.
5. Turn ON power to furnace.
6. Verify proper temperature rise as outlined in *Temperature Rise section*.

Circulator Blower Fan Timing Adjustment

NOTE: Items in this section refer to the **air circulator blower fan** in the *(M,D)H8 models, NOT to the induced draft blower. The induced draft blower timing sequence is not adjustable. The circulator blower fan timing is adjustable only on models with optional "heating fan OFF delay" adjustment pins or switches. It is NOT adjustable in any other circumstances.

As shipped, the circulator blower fan will remain on for 150 seconds after the gas valve closes. When a call for cooling occurs, the circulator fan comes on and remains on for 45 seconds after the call for cooling ends. During normal heating operation, the circulator fan will come on approximately 34 seconds after the gas valve opens.

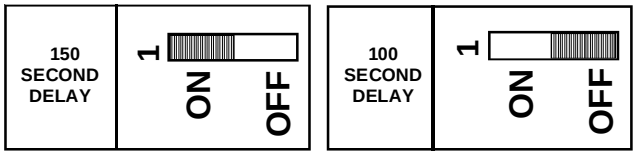

Switch viewed in an upflow installation.

Adjustment Switch

Setting Furnace Operating Mode (DD80HS, DM80HS and DM80HE models only)

This furnace is designed to operate with either a single gas input rate or with two discrete gas input rates. The Mode DIP switch is used to select the single gas input rate or two discrete input rates.

Setting the Mode switch to "1 STG" forces the furnace to operate at the furnace's highest input rate only. Operation is as described under *Sequence of Operation (Integrated Ignition Control) – Mode DIP Switch is set to "1 STG" position*.

Setting the Mode switch to "2 STG" allows the furnace to operate at the furnace's highest input AND at an input rate that is 75% of the highest input rate. For this mode of operation, the furnace operates at the low input rate for a pre-determined time period then steps to the high input rate. Operation is as described under *Sequence of Operation (Integrated Ignition Control) – Mode DIP Switch is set to "2 STG" position*.

The time period is determined by the 2nd Stg Dly DIP switch. Setting the 2nd Stg Dly DIP switch to 5 minutes fixes the delay period at 5 minutes. Setting the 2nd Stg Dly DIP switch to Auto enables an algorithm that calculates a delay period based on the heating cycle time and the total cycle time. The delay period can range from 1 minute to 12 minutes.

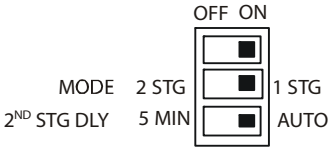

Operational Checks

WARNING

To avoid personal injury or death, do not remove any internal compartment covers or attempt any adjustment. Electrical components are contained in both compartments. Contact a qualified service agent at once if an abnormal flame appearance should develop.

Burner Flame

The burner flames should be inspected with the burner compartment door installed. Flames should be stable, quiet, soft, and blue (dust may cause orange tips but they must not be yellow). Flames should extend directly outward from the burners without curling, floating, or lifting off. Flames must not impinge on the sides of the heat exchanger firing tubes.

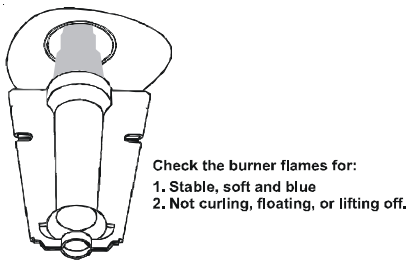

Burner Flame

Auxiliary Limit Control

Auto reset limits are located on or near the blower. To access this auxiliary limit, disconnect the electrical power and remove the blower door. The auxiliary limit control is designed to prevent furnace operation in case of main blower failure on horizontal installations. It may also open if the power supply is interrupted while the furnace is firing. The auxiliary limit control is suitable for both horizontal right and horizontal left installations. Regardless of airflow direction, it does not need to be relocated.

WARNING

To avoid personal injury or death, do not remove any internal compartment covers or attempt any adjustment. Electrical components are contained in both compartments. Contact a qualified service agent at once if an abnormal flame appearance should develop.

Safety Circuit Description

General

A number of safety circuits are employed to ensure safe and proper furnace operation. These circuits serve to control any potential safety hazards and serve as inputs in the monitoring and diagnosis of abnormal function. These circuits are continuously monitored during furnace operation by the integrated control module.

Integrated Control Module

The integrated control module is an electronic device which controls all furnace operations. Responding to the thermostat, the module initiates and controls normal furnace operation, and monitors and addresses all safety circuits. If a potential safety concern is detected, the module will take the necessary precautions and provide diagnostic information through an LED.

Primary Limit

The primary limit control is located on the partition panel and monitors heat exchanger compartment temperatures. It is an automatic reset, temperature sensor. The limit guards against the overheating resulting from insufficient air passing over the heat exchanger.

Auxiliary Limit

The auxiliary limit control is located either on or near the circulator blower and monitors heat exchanger compartment temperatures. The control is an automatic reset, temperature sensor. It guards against overheating resulting from insufficient air passing over the heat exchanger.

Rollout Limits

The rollout limit controls are mounted on the burner/manifold assembly and monitor the burner flame. They are manual-reset, temperature sensors. This limit guards against burner flames not being properly drawn into the heat exchanger.

Pressure Switches

The pressure switches are normally-open, negative air pressure-activated switches. They monitor the airflow (combustion air and flue products) through the heat exchanger via pressure taps located on the induced draft blower. These switches guard against insufficient airflow (combustion air and flue products) through the heat exchanger.

Flame Sensor

The flame sensor is a probe mounted to the burner/manifold assembly which uses the principle of flame rectification to determine the presence or absence of flame.

Troubleshooting

Electrostatic Discharge (ESD) Precautions

NOTE: Discharge body's static electricity before touching unit. An electrostatic discharge can adversely affect electrical components.

Use the following precautions during furnace installation and servicing to protect the integrated control module from damage. By putting the furnace, the control, and the person at the same electrostatic potential, these steps will help avoid exposing the integrated control module to electrostatic discharge. This procedure is applicable to both installed and uninstalled (ungrounded) furnaces.

1. Disconnect all power to the furnace. Do not touch the integrated control module or any wire connected to the control prior to discharging your body's electrostatic charge to ground.
2. Firmly touch a clean, unpainted, metal surface of the furnace away from the control. Any tools held in a person's hand during grounding will be discharged.
3. Service integrated control module or connecting wiring following the discharge process in step 2. Use caution not to recharge your body with static electricity; (i.e., do not move or shuffle your feet, do not touch ungrounded objects, etc.). If you come in contact with an ungrounded object, repeat step 2 before touching control or wires.
4. Discharge your body to ground before removing a new control from its container. Follow steps 1 through 3 if installing the control on a furnace. Return any old or new controls to their containers before touching any ungrounded object.

Diagnostic Chart

Refer to the troubleshooting chart in the Appendix for assistance in determining the source of unit operational problems. The red diagnostic LED blinks to assist in troubleshooting the unit. The number of blinks refer to a specific code.

NOTE: To clear all alarm codes, depress the push button for 6 seconds.

Fault Recall

The ignition control is equipped with a momentary push button switch that can be used to display on the diagnostic LED the last five faults detected by the control. The control must be in Standby Mode (no thermostat inputs) to use the feature. Depress the pushbutton switch for approximately 2 seconds. Release the switch when the LED is turned off. The diagnostic LED will then display the flash codes associated with the last five detected faults. The order of display is the most recent fault to the least recent fault.

Resetting From Lockout

Furnace lockout results when a furnace is unable to achieve ignition after three attempts. It is characterized by a non-functioning furnace and a one flash diagnostic LED code from the red LED. If the furnace is in "lockout", it will (or can be) reset in any of the following ways.

1. Automatic reset. The integrated control module will automatically reset itself and attempt to resume normal operations following a one hour lockout period.
2. Manual power interruption. Interrupt 115 volt power to the furnace for 1 - 20 seconds.
3. Manual thermostat cycle. Lower the thermostat so that there is no longer a call for heat for 1 - 20 seconds then reset to previous setting.

NOTE: If the condition which originally caused the lockout still exists, the control will return to lockout. Refer to the Diagnostic Chart for aid in determining the cause.

Maintenance

WARNING

To avoid electrical shock, injury or death, disconnect electrical power before performing any maintenance. If you must handle the igniter, handle with care. Touching the igniter element with bare fingers, rough handling, or vibration could damage the igniter resulting in premature failure. Only a qualified servicer should ever handle the igniter.

Annual Inspection

The furnace should be inspected by a qualified installer, or service agency at least once per year. This check should be performed at the beginning of the heating season. This will ensure that all furnace components are in proper working order and that the heating system functions appropriately. Pay particular attention to the following items. Repair or service as necessary.

- Flue pipe system. Check for blockage and/or leakage. Check the outside termination and the connections at and internal to the furnace.
- Heat exchanger. Check for corrosion and/or buildup within the heat exchanger passageways.
- Burners. Check for proper ignition, burner flame, and flame sense.
- Wiring. Check electrical connections for tightness and/or corrosion. Check wires for damage.
- Filters.

Filters

WARNING

To avoid property damage, personal injury or death, disconnect electrical power before removing filters. Never operate furnace without a filter installed because dust and lint will build up on internal parts resulting in loss of efficiency, equipment damage and possible fire.

A return air filter is not supplied with this furnace; however, there must be a means of filtering all of the return air. The installer will supply filter(s) at the time of installation.

Filter Maintenance

Improper filter maintenance is the most common cause of inadequate heating or cooling performance. Filters should be cleaned (permanent) or replaced (disposable) every two months or as required. When replacing a filter, it must be replaced with a filter of the same type and size.

WARNING

HIGH VOLTAGE!

To prevent property damage, personal injury or death due to electrical shock, disconnect electrical power to the furnace BEFORE removing the filter or performing any other maintenance.

Become familiar with filter location and procedures for removal, cleaning and replacing them. If help is needed, contact the installer of the furnace or a qualified servicer.

Filter Removal

Depending on the installation, differing filter arrangements can be applied. Filters can be installed in either the central return register or a side panel external filter rack (upflow only). A media air filter or electronic air cleaner can be used as an alternate filter. Follow the filter sizes given in the Recommended Minimum Filter size table or instruction provided by the media or electronic air cleaner manufacturer to ensure proper unit performance.

To remove filters from an external filter rack in an upright upflow installation, follow the directions provided with external filter rack kit. For further details, see your distributor.

Induced Draft and Circulator Blower Motors

The bearings in the induced draft blower and circulator blower motors are permanently lubricated by the manufacturer. No further lubrication is required. Check motor windings for accumulation of dust which may cause overheating. Clean as necessary.

Flame Sensor (Qualified Servicer Only)

Under some conditions, the fuel or air supply can create a nearly invisible coating on the flame sensor. This coating acts as an insulator causing a drop in the flame sense signal. If the flame sense signal drops too low the furnace will not sense flame and will lock out. The flame sensor should be carefully cleaned by a qualified servicer using emery cloth or steel wool. Following cleaning, the flame sense signal should be 1 to 6 microamps at 115 volts.

Igniter (Qualified Servicer Only)

If the igniter and the surrounding air are at about 70°F and the igniter wires are not connected to any other electrical components, the resistance of the igniter should not exceed 75 ohms. If it does, the igniter should be replaced.

Burners

WARNING

To prevent personal injury or death, do not remove any internal compartment covers or attempt any adjustment. Electrical components are contained in both compartments. Contact a qualified service agent at once if an abnormal flame appearance should develop.

Periodically during the heating season, make a visual check of the burner flames. Turn the furnace on at the thermostat. Wait a few minutes, since any dislodged dust will alter the normal flame appearance. Flames should be stable, quiet, soft and blue with slightly orange tips. They should not be yellow. They should extend directly outward from the burner ports without curling downward, floating or lifting off the ports.

Cleaning (Qualified Servicer Only)

1. Shut off electric power and gas supply to the furnace.
2. Disconnect the rollout limit wires, flame sensor wire, and disconnect the igniter plug.

CAUTION

Label all wires prior to disconnection when servicing controls. Wiring errors can cause improper and dangerous operation. Verify proper operation after servicing.

3. Remove four (4) screws securing the burner box top.

CAUTION

The igniter is fragile and can be easily damaged. Use extreme caution when removing the burner box top.

4. Remove the screws securing the burners to the burner bracket. Remove the burners.
5. Use bottle brush to clean burner insert and inside of burner.
6. Replace burner (opposite of removal). Ensure burners are fully seated on burner bracket and are properly aligned. Replace burner box top. Reconnect wiring.
7. Turn on electric power and gas supply to the furnace.
8. Check furnace for proper operation. Refer to *"Operational Checks"* section to verify burner flame characteristics.

Before Leaving an Installation

- Cycle the furnace with the thermostat at least three times. Verify cooling and fan only operation.
- Review the Owner's Manual with the homeowner and discuss proper furnace operation and maintenance.
- Leave literature packet near furnace.

Repair and Replacement Parts

- When ordering any of the listed functional parts, be sure to provide the furnace model, manufacturing, and serial numbers with the order.
- Although only functional parts are shown in the parts list, all sheet metal parts, doors, etc. may be ordered by description.
- Parts are available from your distributor.

Functional Parts List-

Gas Valve	Blower/Collector Box Gasket
Natural Gas Orifice	Primary Limit Switch
Propane Gas Orifice	Rollout Limit Switch
Burner	Auxiliary Limit Switch
Hot Surface Igniter	Heat Exchanger
Flame Sensor	Door Switch
Gas Manifold	Transformer
Ignition Control	Blower Wheel
Blower Mounting Bracket	Blower Housing
Pressure Switch	Blower Cutoff
Pressure Switch Hose	Blower Motor
Induced Draft Blower	Motor Mount Bracket
Collector Box	Capacitor

COMPONENT ID

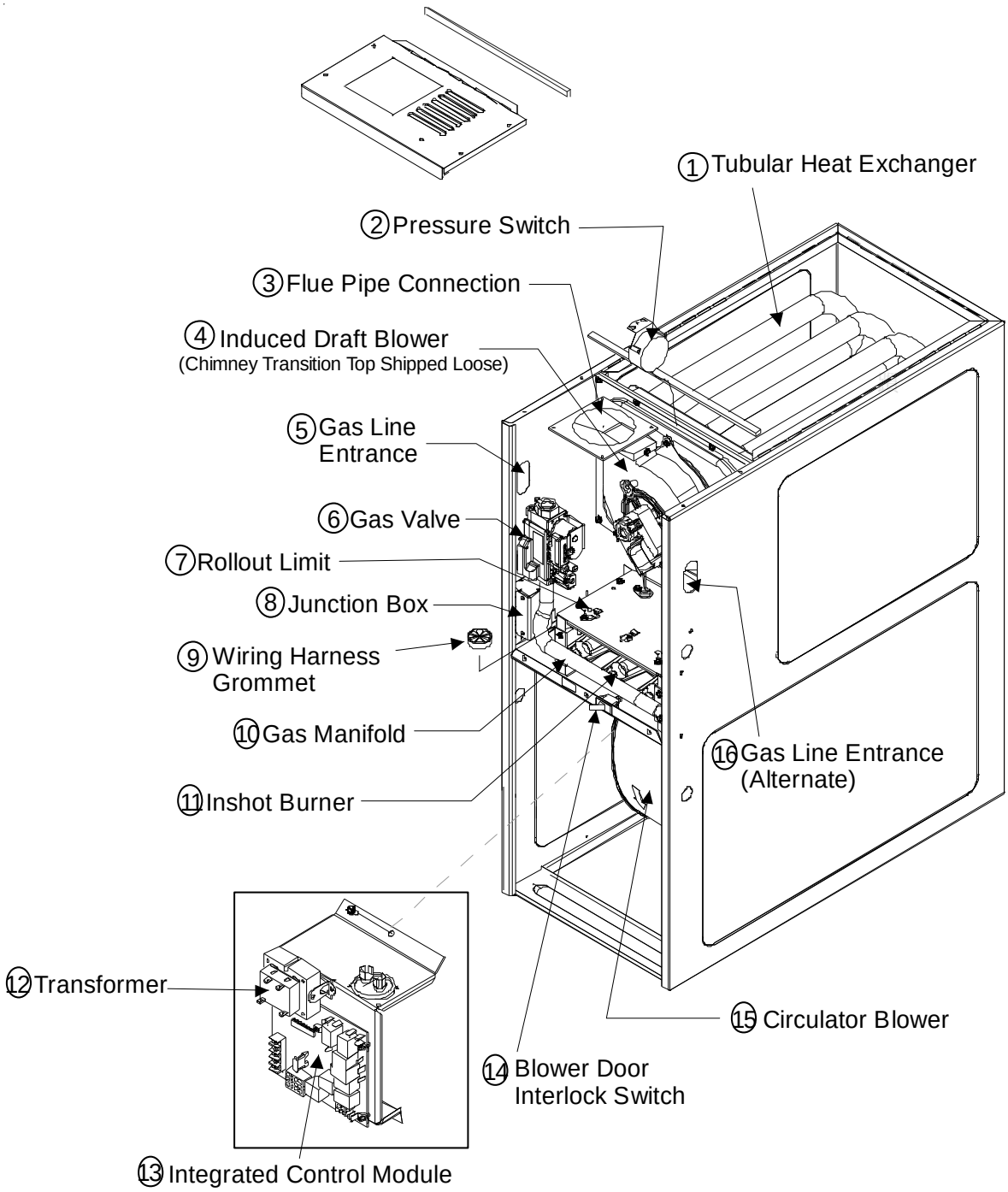

1 Tubular Heat Exchanger
2 Pressure Switch
3 Flue Pipe Connection
4 Induced Draft Blower
5 Gas Line Entrance
6 Gas Valve
7 Rollout Limit
8 Junction Box
9 Wiring Harness Grommet
10 Gas Manifold
11 Inshot Burner
12 Transformer
13 Integrated Control Module
14 Blower Door Interlock Switch
15 Circulator Blower
16 Gas Line Entrance (Alternate)

TROUBLESHOOTING CHART

Symptoms of Abnormal Operation	Associated LED Code[2]	Fault Description(s)	Possible Causes	Corrective Action	Cautions & Notes
• Furnace fails to operate. • Integrated control module diagnostic **LED** provides **no signal**.	NONE	• No 115 volt power to furnace, or no 24 volt power to integrated control module. • Blown fuse or circuit breaker.	• Manual disconnect switch OFF, door switch open, or 24 volt wires improperly connected or loose. • Blown fuse or circuit breaker.	• Assure 115 and 24 volt power to furnace integrated control module. • Check integrated control module fuse (3A). Replace if necessary. • Check for possible shorts in 115 and 24 volt circuits. Repair as necessary.	• Turn power OFF prior to repair. • Replace integrated control module fuse with 3A automotive fuse. • Turn power OFF prior to repair.
• Furnace fails to operate.		• Integrated control module has an internal fault.	• Integrated control module has an internal fault.	• Replace bad integrated control module.	• Read precautions in "Electrostatic Discharge" section of manual.
• Furnace fails to operate. • Integrated control module diagnostic **LED** is flashing **ONE** (1) flash.	1 1 FLASH	• Furnace lockout due to an excessive number of ignition attempts. (3 total)[1] • Auxiliary Limit Open	• Failure to establish flame. Cause may be no gas to burners, bad igniter or igniter alignment, improper orifices, or coated/ oxidized or improperly connected flame sensor. • Loss of flame after establishment. Cause may be interrupted gas supply, lazy burner flames (improper gas pressure or restriction in flue or improper induced draft blower performance. • Insufficient conditioned air over the heat exchanger. Blocked filters, restrictive ductwork, improper circulator blower speed, or failed circulator blower.	• Locate and correct gas interruption. • Replace or realign igniter. • Check flame sense signal. Sand sensor if coated and/or oxidized. • Check flue piping for blockage, proper length, elbows, and termination. • Verify proper induced draft blower performance. • Check circulator blower speed and performance. Correct speed or replace blower if necessary.	• Turn power OFF prior to repair. • Igniter is fragile, handle with care. • Clean flame sensor with steel wool. • See "Combustion and Ventilation Air Requirements" and "Category I Venting (Vertical Venting)" section for details. • See Product Data Bulletin for allowable rise range and proper circulator speed.
• Furnace fails to operate. • Integrated control module diagnostic **LED** is flashing **TWO** (2) flashes.	2 2 FLASHES	• Pressure switch circuit is closed. • Induced draft blower **is not** operating.	• Induced draft blower pressure switch contacts sticking. • Shorts in pressure switch circuit.	• Replace induced draft blower pressure switch. • Repair short.	• Turn power OFF prior to repair. • Replace pressure switch with proper replacement part.
• Induced draft blower runs continuously with no further furnace operation. • Integrated control module diagnostic **LED** is flashing **THREE** (3) flashes.	3 3 FLASHES	• Pressure switch circuit not closed. • Induced draft blower **is** operating. • If installed, manual reset limit switch is open on Masonry Vent Kit (MVK).	• Pressure switch hose blocked, pinched or connected improperly. • Blocked flue or weak induced draft blower. • Incorrect pressure switch setpoint or malfunctioning switch contacts. • Loose or improperly connected wiring. • Blockage in flue or chimney.	• Inspect pressure switch hose. Repair, if necessary, • Inspect flue for blockage, proper length, elbows, and termination. • Correct pressure switch setpoint or contact motion. • Tighten or correct wiring connection. • Inspect masonry chimney and flue; remove blockage.	• Turn power OFF prior to repair. • See "Combustion and Ventilation Air Requirements" and "Category I Venting (Vertical Venting)" section for details. • Replace pressure switch with proper replacement part. • Replace masonry vent kit limit switch with correct replacement part.

[1] Integrated control module will automatically attempt to reset from lockout after one hour.

[2] LED Flash code will cease if power to the control module is interrupted through the disconnect or door switch.

TROUBLESHOOTING CHART

Symptoms of Abnormal Operation	Associated LED Code[2]	Fault Description(s)	Possible Causes	Corrective Action	Cautions & Notes
• Circulator blower runs continuously. No furnace operation. • Integrated control module diagnostic **LED** is flashing **FOUR** (4) flashes.	4 4 FLASHES	• Primary limit circuit is open.	• Insufficient conditioned air over the heat exchanger. Blocked filters, restrictive ductwork, improper circulator blower speed, or failed circulator blower. • Faulty primary limit switch. • Loose or improperly connected wiring.	• Check primary limit. Replace if necessary. • Check filters and ductwork for blockage. Clean filters or remove obstruction. • Check circulator blower speed and performance. Correct speed or replace blower if necessary. • Tighten or correct wiring connection.	• Turn power OFF prior to repair. • Replace primary switch with proper replacement part. • Replace blower with correct replacement part.
• Induced draft blower and circulator blower runs continuously. No furnace operation. • Integrated control module diagnostic **LED** is flashing **FIVE** (5) flashes.	5 5 FLASHES	• Flame sensed with no call for heat.	• Short to ground in flame sense circuit.	• Correct short at flame sensor or in flame sensor wiring.	• Turn power OFF prior to repair.
• Furnace fails to operate. • Integrated control module diagnostic **LED** is flashing **SIX** (6) flashes. • No furnace operation.	6 6 FLASHES	• Rollout limit open. • Integrated control module fuse is blown.	• Flame rollout. • Misaligned burners, blocked flue and/or air inlet pipe, or failed induced draft blower. • Loose or improperly connected wiring. • Short in 24 volt AC control circuits or safety circuits. • Faulty rollout limit.	• Check burners for proper alignment. • Check flue and air inlet piping for blockage, proper length, elbows, and termination. Correct as necessary. • Check rollout limit. Replace if necessary. • Check induced draft blower for proper performance. Replace, if necessary. • Tighten or correct wiring connection. • Repair short in 24 volt AC control/safety circuit(s). • Replace integrated control module fuse (3A). • Sand flame sensor.	• See "Vent/Flue Pipe" section for piping details. • Replace induced draft blower with proper replacement part. • Replace integrated control module fuse with 3A automotive fuse. • Read precautions in "Electrostatic Discharge" section of manual. • Replace rollout limit with correct replacement part.
• Normal furnace operation. • Integrated control module diagnostic **LED** is flashing **SEVEN** (7) flashes.	7 7 FLASHES	• Flame sense microamp signal is low.	• Flame sensor is coated/ oxidized. • Flame sensor incorrectly positioned in burner flame. • Lazy burner flame due to improper gas pressure or combustion air.	• Inspect for proper sensor alignment. • Compare current gas pressure to rating plate info. Adjust as needed.	• Turn power OFF prior to repair. • Clean flame sensor with steel wool. • See "Vent/Flue Pipe" section for piping details. • See rating plate for proper gas pressure.

[2] LED Flash code will cease if power to the control module is interrupted through the disconnect or door switch.

TROUBLESHOOTING CHART

Symptoms of Abnormal Operation	Associated LED Code[2]	Fault Description(s)	Possible Causes	Corrective Action	Cautions & Notes
• Furnace not operating. • Integrated control module diagnostic **LED** is flashing **EIGHT** (8) flashes.	8 8 FLASHES	• Problem with igniter circuit.	• Improperly connected igniter. • Bad igniter. • Poor unit ground. • Poor burner ground. • Faulty integrated control module.	• Check and correct wiring from integrated control module to igniter. • Replace bad igniter. • Check and correct unit ground wiring. • Replace bad integrated control module.	• Turn power OFF prior to repair. • Replace igniter with proper replacement part. • Read precautions in "Electrostatic Discharge" section of manual.
• Induced draft blower runs continuously. No furnace operation. • Integrated control module diagnostic **LED** is flashing **continuously.**	C CONTINUOUS FLASHING	• Polarity of 115 or 24 volt power is reversed.	• Polarity of 115 volt AC power to furnace or integrated control module is reversed. • Red and blue wires to transformer are reversed. • Poor unit ground.	• Review wiring diagram to correct polarity. • Verify proper ground. Correct if necessary. • Reverse red and blue wires connected to transformer.	• Turn power OFF prior to repair.
• LED is steady on	STEADY	• Normal operation.			

[2] LED Flash code will cease if power to the control module is interrupted through the disconnect or door switch.

DM80(H,S)S

(CFM & Temperature Rise vs. External Static Pressure)

Model	Motor Speed	Tons AC at 0.5" ESP	EXTERNAL STATIC PRESSURE (Inches Water Column)												
			0.1		0.2		0.3		0.4		0.5		0.6	0.7	0.8
			CFM	RISE	CFM	RISE	CFM	RISE	CFM	RISE	CFM	RISE	CFM	CFM	CFM
DM80(H,S)S0403A***	HIGH	3.0	1521	----	1466	----	1414	----	1373	----	1298	----	1243	1164	1075
	MED	2.5	1160	26	1160	26	1132	26	1121	26	1082	27	1042	997	925
	MED-LO	2.0	961	31	955	31	948	31	932	32	913	33	882	821	803
	LOW	1.5	781	38	785	38	781	38	773	38	761	32	745	716	668
DM80(H,S)S0603A***	HIGH	3.0	1422	31	1352	33	1307	34	1197	37	1157	38	1092	1075	983
	MED	2.5	1098	40	1081	41	1051	42	1039	43	1021	44	983	924	868
	MED-LO	2.0	919	48	913	49	892	50	847	----	829	----	818	792	728
	LOW	1.5	758	----	741	----	741	----	733	----	699	----	677	649	626
DM80(H,S)S0604B***	HIGH	4.0	2134	21	2100	21	2042	22	1975	23	1883	24	1786	1700	1601
	MED	3.5	1668	27	1663	27	1656	27	1645	27	1616	28	1549	1492	1391
	MED-LO	3.0	1419	31	1426	31	1426	31	1432	31	1419	31	1378	1328	1261
	LOW	2.5	1134	39	1145	39	1166	38	1171	38	1160	38	1144	1111	1071
DM80(H,S)S0803B***	HIGH	3.0	1607	37	1572	38	1547	39	1498	40	1448	41	1390	1302	1222
	MED	2.5	1159	51	1156	51	1145	52	1127	53	1108	53	1075	1033	957
	MED-LO	2.0	938	63	916	65	916	65	900	----	889	----	865	829	785
	LOW	1.5	785	----	766	----	743	----	730	----	709	----	683	666	604
DM80(H,S)S0804B***	HIGH	4.0	2051	----	1983	----	1895	----	1812	----	1725	----	1627	1530	1439
	MED	3.5	1736	----	1708	35	1652	36	1611	37	1540	38	1475	1394	1307
	MED-LO	3.0	1693	35	1668	36	1459	41	1429	41	1389	43	1339	1274	1204
	LOW	2.5	1200	49	1185	50	1180	50	1173	51	1158	51	1125	1125	1080
DM80(H,S)S0805C***	HIGH	5.0	2290	----	2229	----	2155	----	2047	----	1960	----	1837	1712	1584
	MED	4.0	1852	----	1820	----	1777	----	1719	---	1641	36	1567	1469	1382
	MED-LO	3.5	1615	37	1592	37	1556	38	1516	39	1470	40	1405	1346	1235
	LOW	3.0	1290	46	1285	46	1265	47	1235	48	1214	49	1174	1044	904
DM80(H,D)D1005C***	HIGH	5.0	2323	----	2225	----	2120	35	2040	36	1974	38	1801	1688	1577
	MED	4.0	1858	40	1847	40	1799	41	1744	42	1674	44	1577	1493	1399
	MED-LO	3.5	1596	46	1587	47	1571	47	1552	48	1493	50	1397	1326	1217
	LOW	3.0	1291	57	1272	58	1261	59	1257	59	1205	61	1168	1118	1060
DM80(H,S)S1205D***	HIGH	5.0	2469	----	2389	----	2300	----	2223	40	2131	42	2027	1902	1786
	MED	4.0	1575	56	1558	57	1545	58	1513	59	1500	59	1419	1354	1271
	MED-LO	3.5	1402	63	1380	64	1343	66	1319	67	1296	69	1245	1183	1106
	LOW	3.0	1200	----	1186	----	1161	----	1127	----	1082	----	1042	995	926
DM80(H,S)S1405D***	HIGH	5.0	2469	42	2389	43	2300	45	2223	47	2131	49	2027	1902	1786
	MED	4.0	1575	66	1558	67	1545	67	1513	69	1500	69	1419	1354	1271
	MED-LO	3.5	1402	----	1380	----	1343	----	1319	----	1296	----	1245	1183	1106
	LOW	3.0	1200	----	1186	----	1161	----	1127	----	1082	----	1042	995	926

DD80(H,S)S

(CFM & Temperature Rise vs. External Static Pressure)

Model	Motor Speed	Tons AC at 0.5" ESP	EXTERNAL STATIC PRESSURE (Inches Water Column)												
			0.1		0.2		0.3		0.4		0.5		0.6	0.7	0.8
			CFM	RISE	CFM	RISE	CFM	RISE	CFM	RISE	CFM	RISE	CFM	CFM	CFM
DD80(H,S)S0403A***	HIGH	3.0	1353	----	1290	----	1246	----	1199	25	1149	26	1116	1116	1099
	MED	2.5	1183	25	1113	27	1098	27	1052	28	1039	29	1006	1012	969
	MED-LO	2.0	980	30	946	31	920	32	900	33	896	33	885	855	804
	LOW	1.5	778	38	762	39	738	40	746	40	738	40	717	696	678
DD80(H,S)S0603A***	HIGH	3.0	1290	34	1236	36	1194	37	1166	38	1176	38	1166	1108	1029
	MED	2.5	1139	39	1090	41	1035	43	1063	42	1063	42	1020	962	895
	MED-LO	2.0	962	46	927	48	925	48	941	47	909	49	877	834	779
	LOW	1.5	787	56	776	57	763	58	744	60	723	----	690	641	581
DD80(H,S)S0804B***	HIGH	4.0	2128	----	2063	----	2001	----	1927	----	1824	----	1726	1628	1529
	MED	3.5	1840	----	1788	----	1745	----	1689	35	1625	36	1550	1470	1364
	MED-LO	3.0	1602	37	1558	38	1543	38	1493	40	1455	41	1402	1328	1239
	LOW	2.5	1277	46	1252	47	1244	48	1229	48	1214	49	1179	1141	1079
DD80(H,S)S1005C***	HIGH	5.0	2405	----	2361	----	2250	----	2161	-----	2037	36	1937	1808	1689
	MED	4.0	1880	39	1838	40	1794	41	1734	43	1677	44	1568	1510	1401
	MED-LO	3.5	1659	45	1630	45	1587	47	1537	48	1492	50	1445	1368	1287
	LOW	3.0	1472	50	1454	51	1404	53	1366	54	1326	56	1300	1228	1139

BLOWER PERFORMANCE DATA

DM80HE

(CFM & Temperature Rise vs. External Static Pressure)

Model	Motor Speed	Tons AC at 0.5" ESP	EXTERNAL STATIC PRESSURE (Inches Water Column)												
			0.1		0.2		0.3		0.4		0.5		0.6	0.7	0.8
			CFM	RISE	CFM	RISE	CFM	RISE	CFM	RISE	CFM	RISE	CFM	CFM	CFM
DM80HE0603B***	T1 - YELLOW	1.5	875	----	793	----	736	----	674	----	592	----	556	509	460
	T2 - RED	2.0	1032	43	965	46	914	49	861	----	810	----	756	712	659
	T3 - ORANGE	2.5	1217	37	1153	39	1098	40	1051	42	1009	44	964	918	877
	T4 - BLUE	3.0	1365	33	1313	34	1268	35	1221	36	1172	38	1129	1086	1054
	T5 - BLACK	3.5	1549	29	1505	30	1460	30	1420	31	1378	32	1350	1305	1268
DM80HE0805C***	T1 - YELLOW	2.5	1268	47	1198	49	1151	51	1092	54	1041	57	988	932	883
	T2 - RED	3.0	1362	44	1305	45	1261	47	1212	49	1170	51	1121	1074	1021
	T3 - ORANGE	3.5	1576	38	1519	39	1473	40	1426	42	1398	42	1341	1290	1252
	T4 - BLUE	4.0	1755	----	1711	35	1657	36	1627	36	1579	38	1548	1502	1463
	T5 - BLACK	5.0	2183	----	2128	----	2094	----	2060	----	2014	----	1992	1944	1847
DM80HE0805D***	T1 - YELLOW	3.5	1524	39	1479	40	1439	41	1388	43	1343	44	1281	1243	1190
	T2 - RED	4.0	1683	35	1646	36	1607	37	1569	38	1531	39	1488	1441	1395
	T3 - ORANGE	4.0	1884	31	1832	32	1849	32	1765	34	1724	34	1692	1661	1626
	T4 - BLUE	4.0	1951	30	1904	31	1879	32	1842	32	1803	33	1768	1734	1687
	T5 - BLACK	5.0	2036	29	2010	29	1977	30	1947	30	1923	31	1888	1844	1816
DM80HE1005C***	T1 - YELLOW	3.0	1466	51	1415	52	1357	55	1306	57	1248	59	1202	1144	1088
	T2 - RED	3.5	1642	45	1596	46	1552	48	1499	49	1449	51	1388	1352	1306
	T3 - ORANGE	4.0	1750	42	1750	42	1707	43	1667	44	1610	46	1574	1531	1486
	T4 - BLUE	4.0	1870	40	1805	41	1782	42	1737	43	1701	44	1656	1606	1571
	T5 - BLACK	5.0	2297	----	2297	----	2224	----	2106	35	2014	37	1896	1813	1669

Notes:

- CFM in chart is without filter(s). Filters do not ship with this furnace, but must be provided by the installer. If the furnace requires two return filters, this chart assumes both filters are installed.
- All furnaces ship as high-speed cooling and medium-speed heating. Installer must adjust blower cooling and heating speed as needed.
- For most jobs, about 375 - 400 CFM per ton when cooling is desirable.
- INSTALLATION IS TO BE ADJUSTED TO OBTAIN TEMPERATURE RISE WITHIN THE RANGE SPECIFIED ON THE RATING PLATE.
- This chart is for information only. For satisfactory operation, external static pressure **should** not exceed value shown on the rating
- A properly derated unit will have approximately the same temperature rise at a particular CFM, while ESP at the CFM will be lower.
- Factory Motor Speed Setting: T3= 1st Stage Ht, T4 = 2nd Stage Ht, T5 = Cooling.
- Temperature rise data is based on 2nd-stage heat. First-stage heat is 75% of rise indicated above.

DM80SS / DD80SS WIRING DIAGRAM

WARNING

HIGH VOLTAGE!
DISCONNECT ALL POWER BEFORE SERVICING OR INSTALLING THIS UNIT. MULTIPLE POWER SOURCES MAY BE PRESENT. FAILURE TO DO SO MAY CAUSE PROPERTY DAMAGE, PERSONAL INJURY OR DEATH.

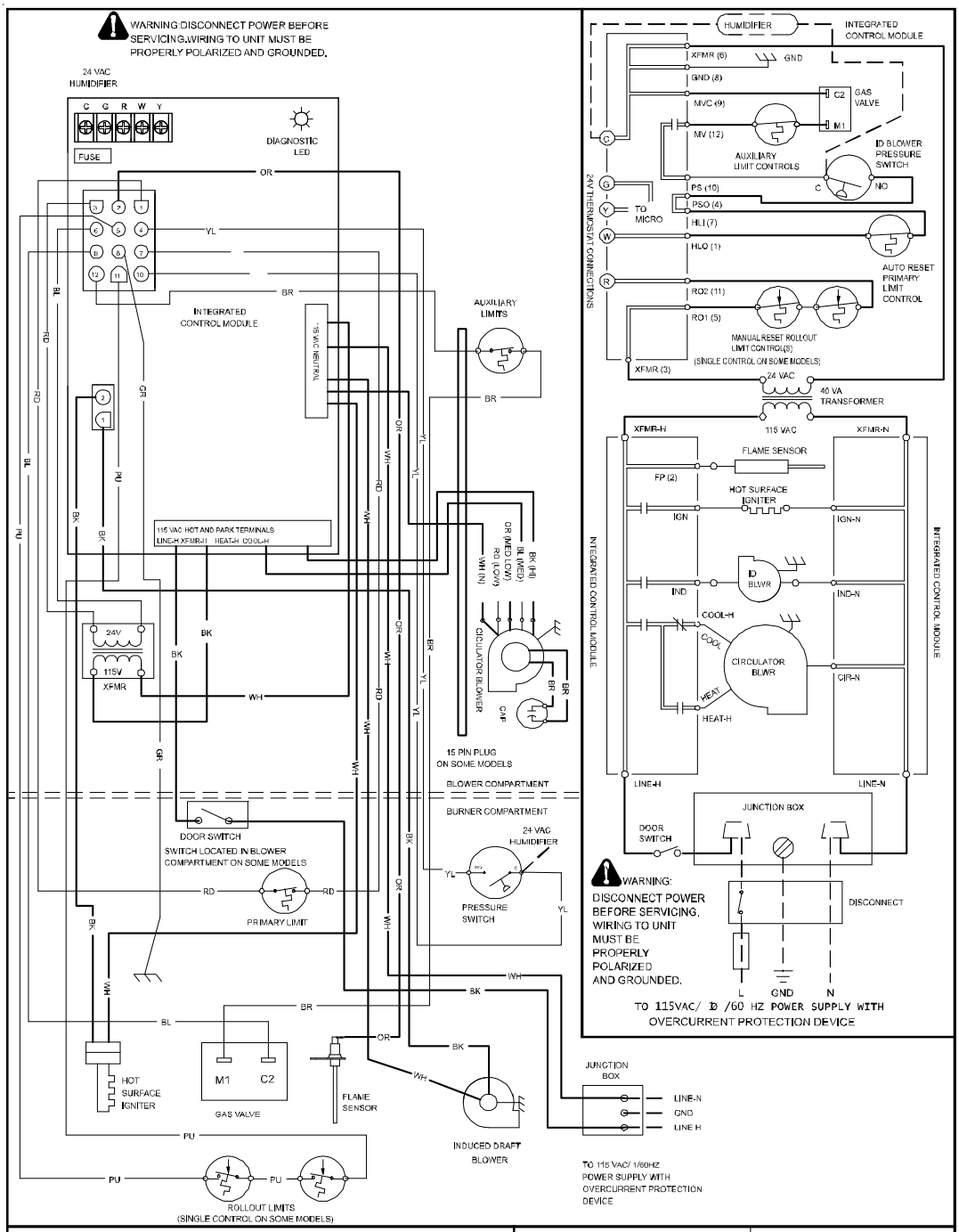

- STEADY ON = NORMAL OPERATION
- OFF = CONTROL FAILURE
- 1 FLASH = SYSTEM LOCKOUT (RETRIES/RECYCLES EXCEEDED)
- 2 FLASHES = PRESSURE SWITCH STUCK CLOSED
- 3 FLASHES = PRESSURE SWITCH STUCK OPEN
- 4 FLASHES = OPEN HIGH LIMIT
- 5 FLASHES = FLAME SENSE WITHOUT GAS VALVE
- 6 FLASHES = OPEN ROLLOUT
- 7 FLASHES = LOW FLAME SIGNAL
- RAPID FLASHES = REVERSED 115 VAC POLARITY/VERIFY GND

- LOW VOLTAGE (24V)
- LOW VOLTAGE FIELD
- HI VOLTAGE (115V)
- HI VOLTAGE FIELD
- JUNCTION
- TERMINAL
- INTERNAL TO INTEGRATED CONTROL
- PLUG CONNECTION

- EQUIPMENT GND
- FIELD GND
- FIELD SPLICE
- SWITCH (TEMP.)
- IGNITER
- SWITCH (PRESS.)
- OVERCURRENT PROT. DEVICE

COLOR CODES:	
YL YELLOW	PK PINK
OR ORANGE	BR BROWN
PU PURPLE	WH WHITE
GR GREEN	BL BLUE
BK BLACK	GY GRAY
	RD RED

0140F00119 REV. A

NOTES:
1. SET HEAT ANTICIPATOR ON ROOM THERMOSTAT AT 0.7 AMPS.
2. MANUFACTURER'S SPECIFIED REPLACEMENT PARTS MUST BE USED WHEN SERVICING.
3. IF ANY OF THE ORIGINAL WIRE AS SUPPLIED WITH THE FURNACE MUST BE REPLACED, IT MUST BE REPLACED WITH WIRING MATERIAL HAVING A TEMPERATURE RATING OF AT LEAST 105°C. USE COPPER CONDUCTORS ONLY.
4. BLOWER SPEEDS SHOULD BE ADJUSTED BY INSTALLER TO MATCH THE INSTALLATION REQUIREMENTS SO AS TO PROVIDE THE CORRECT HEATING TEMPERATURE RISE AND THE CORRECT COOLING CFM. (SEE SPEC SHEET FOR AIR FLOW CHART)
5. UNIT MUST BE PERMANENTLY GROUNDED AND CONFORM TO N.E.C. AND LOCAL CODES.

Wiring is subject to change. Always refer to the wiring diagram on the unit for the most up-to-date wiring.

DM80HE Wiring Diagram

White Rodgers Gas Valve

HIGH VOLTAGE!
DISCONNECT ALL POWER BEFORE SERVICING OR INSTALLING THIS UNIT. MULTIPLE POWER SOURCES MAY BE PRESENT. FAILURE TO DO SO MAY CAUSE PROPERTY DAMAGE, PERSONAL INJURY OR DEATH.

WARNING

WARNING: DISCONNECT POWER BEFORE SERVICING. WIRING TO UNIT MUST BE PROPERLY POLARIZED AND GROUNDED.

24 VAC HUMIDIFIER

C G R W Y

AUTO 1 STG 150 SEC | 5 MIN 2 STG 150 SEC | 2ND STG ON MODE HI ON ONLY

FUSE | SEE NOTE 6 | DIAGNOSTIC LED

INTEGRATED CONTROL MODULE

AUXILIARY LIMITS

HEAT-H | COOL-H | HI-HEAT

LINE NEUTRAL

XFMR-H | LINE-H | EAC-H

PARK

24V | 115V | XFMR

CIRCULATOR BLOWER

15 PIN PLUG ON SOME MODELS

BLOWER COMPARTMENT

BURNER COMPARTMENT

DOOR SWITCH

SWITCH LOCATED IN BLOWER COMPARTMENT ON SOME MODELS

PRIMARY LIMIT

24 VAC HUMIDIFIER

PRESSURE SWITCH

PM 1 | C 2 | HI 3

2 STAGE GAS VALVE

HOT SURFACE IGNITER

INDUCED DRAFT BLOWER

FLAME SENSOR

ROLLOUT LIMITS (SINGLE CONTROL ON SOME MODELS)

JUNCTION BOX

LINE-N | GND | LINE H

TO 115 VAC/ 1/60HZ POWER SUPPLY WITH OVERCURRENT PROTECTION DEVICE

HUMIDIFIER | INTEGRATED CONTROL MODULE

XFMR (6) | GND | GND (8) | MVC (9) | MVH (12) | MVL (2)

C2 | HI | M1 | GAS VALVE

AUXILIARY LIMIT CONTROLS

ID BLOWER PRESSURE SWITCH

NO

24V THERMOSTAT CONNECTIONS

PS (10) | PSO (4) | TO MICRO | HLI (7) | HLO (1)

AUTO RESET PRIMARY LIMIT CONTROL

RO2 (11) | RO1 (5)

MANUAL RESET ROLLOUT LIMIT CONTROL(S) (SINGLE CONTROL ON SOME MODELS)

XFMR (3)

24 VAC | 40 VA TRANSFORMER | 115 VAC

XFMR-H | XFMR-N

FLAME SENSOR

FP | HOT SURFACE IGNITER | IGN | IGN-N

INTEGRATED CONTROL MODULE

ID BLWR | IND | IND-N

HEAT-H | COOL-H | HI HEAT-H | CIRCULATOR BLWR | CIR-N

ELECTRONIC AIR CLEANER | EAC-H | EAC-N

LINE-H | LINE-N

JUNCTION BOX

DOOR SWITCH

WARNING: DISCONNECT POWER BEFORE SERVICING. WIRING TO UNIT MUST BE PROPERLY POLARIZED AND GROUNDED.

DISCONNECT

L | GND | N

TO 115VAC/ 1 Ø /60 HZ POWER SUPPLY WITH OVERCURRENT PROTECTION DEVICE

- STEADY ON = NORMAL OPERATION
- OFF = CONTROL FAILURE
- 1 FLASH = SYSTEM LOCKOUT (RETRIES/RECYCLES EXCEEDED)
- 2 FLASHES = PRESSURE SWITCH STUCK CLOSED
- 3 FLASHES = PRESSURE SWITCH STUCK OPEN
- 4 FLASHES = OPEN HIGH LIMIT
- 5 FLASHES = FLAME SENSE WITHOUT GAS VALVE
- 6 FLASHES = OPEN ROLLOUT OR OPEN FUSE
- 7 FLASHES = LOW FLAME SIGNAL
- 8 FLASHES = CHECK IGNITER OR IMPROPER GROUND
- RAPID FLASHES = REVERSED 115 VAC POLARITY/VERIFY GND

LOW VOLTAGE (24V) | LOW VOLTAGE FIELD | HI VOLTAGE (115V) | HI VOLTAGE FIELD | JUNCTION | TERMINAL | INTERNAL TO INTEGRATED CONTROL | PLUG CONNECTION

EQUIPMENT GND | FIELD GND | FIELD SPLICE | SWITCH (TEMP.) | IGNITER | SWITCH (PRESS.) | OVERCURRENT PROT. DEVICE

COLOR CODES:

YL YELLOW	PK PINK
OR ORANGE	BR BROWN
PU PURPLE	WH WHITE
GR GREEN	BL BLUE
BK BLACK	GY GRAY
	RD RED

0140F00643 REV. A

NOTES:
1. SET HEAT ANTICIPATOR ON ROOM THERMOSTAT AT 0.7 AMPS.
2. MANUFACTURER'S SPECIFIED REPLACEMENT PARTS MUST BE USED WHEN SERVICING.
3. IF ANY OF THE ORIGINAL WIRE AS SUPPLIED WITH THE FURNACE MUST BE REPLACED, IT MUST BE REPLACED WITH WIRING MATERIAL HAVING A TEMPERATURE RATING OF AT LEAST 105 °C. USE COPPER CONDUCTORS ONLY.
4. BLOWER SPEEDS SHOULD BE ADJUSTED BY INSTALLER TO MATCH THE INSTALLATION REQUIREMENTS SO AS TO PROVIDE THE CORRECT HEATING TEMPERATURE RISE AND THE CORRECT COOLING CFM. (SEE SPEC SHEET FOR AIR FLOW CHART)
5. UNIT MUST BE PERMANENTLY GROUNDED AND CONFORM TO N.E.C. AND LOCAL CODES.
6. TO RECALL THE LAST 5 FAULTS, MOST RECENT TO LEAST RECENT, DEPRESS SWITCH FOR MORE THAN 2 SECONDS WHILE IN STANDBY(NO THERMOSTAT INPUTS).

Wiring is subject to change. Always refer to the wiring diagram on the unit for the most up-to-date wiring.

WARNING

HIGH VOLTAGE!
DISCONNECT ALL POWER BEFORE SERVICING OR INSTALLING THIS UNIT. MULTIPLE POWER SOURCES MAY BE PRESENT. FAILURE TO DO SO MAY CAUSE PROPERTY DAMAGE, PERSONAL INJURY OR DEATH.

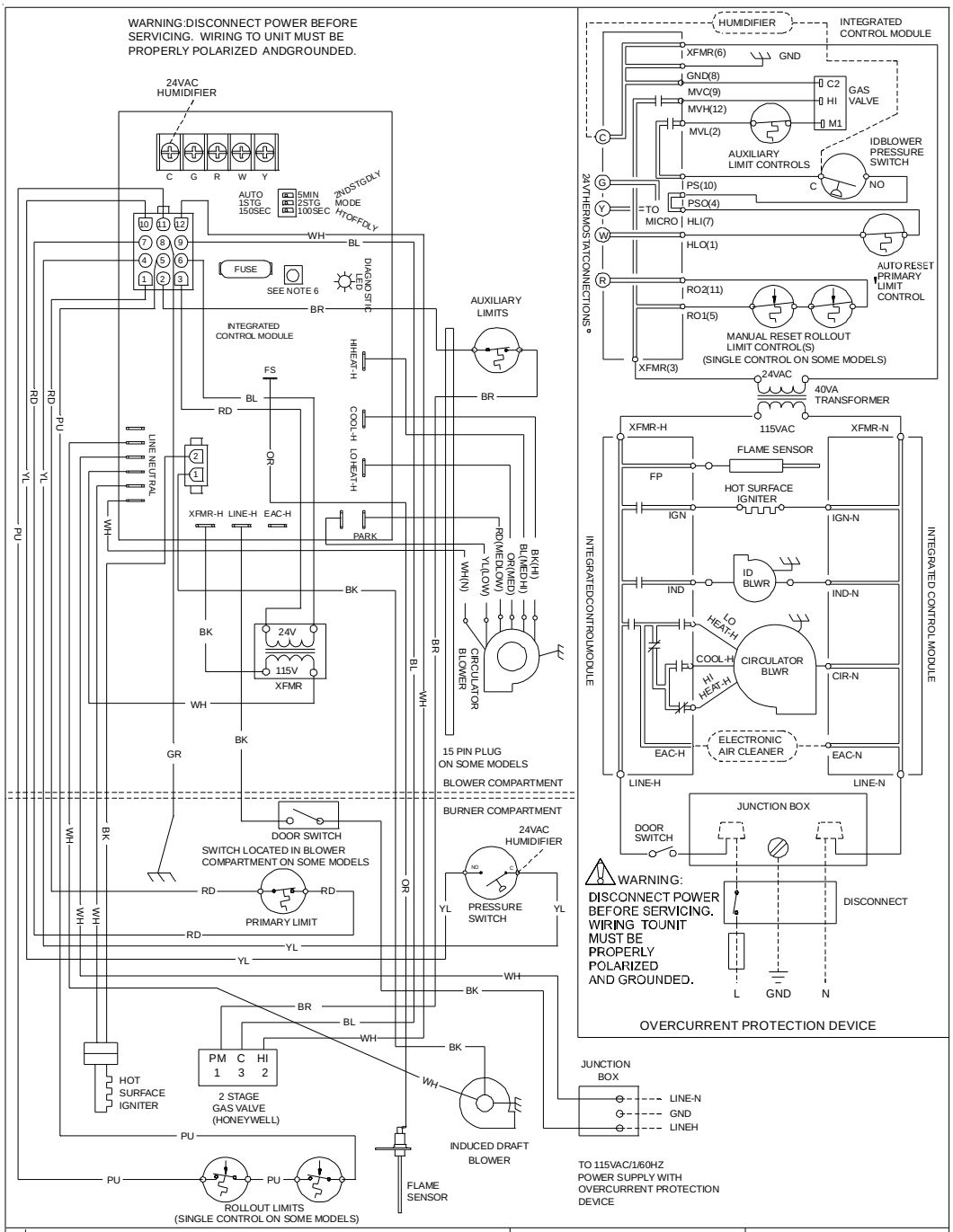

- 0 STEADY ON = NORMAL OPERATION
- ● OFF = CONTROL FAILURE
- 1 1 FLASH = SYSTEM LOCKOUT (RETRIES/RECYCLES EXCEEDED)
- 2 2 FLASHES = PRESSURE SWITCH STUCK CLOSED
- 3 3 FLASHES = PRESSURE SWITCH STUCK OPEN
- 4 4 FLASHES = OPEN HIGH LIMIT
- 5 5 FLASHES = FLAME SENSE WITHOUT GAS VALVE
- 6 6 FLASHES = OPEN ROLLOUT OR OPEN FUSE
- 7 7 FLASHES = LOW FLAME SIGNAL
- 8 8 FLASHES = CHECK IGNITER OR IMPROPER GROUND
- C RAPID FLASHES = REVERSED 115VAC POLARITY/VERIFY GND

LOW VOLTAGE (24V)
LOW VOLTAGE FIELD
HI VOLTAGE (115V)
HI VOLTAGE FIELD
JUNCTION
TERMINAL
INTERNAL TO INTEGRATED CONTROL
PLUG CONNECTION

EQUIPMENT GND
FIELD GND
FIELD SPLICE
SWITCH (TEMP.)
IGNITER
SWITCH (PRESS.)
OVERCURRENT PROT. DEVICE

COLOR CODES:

YL YELLOW	PK PINK
OR ORANGE	BR BROWN
PU PURPLE	WH WHITE
GR GREEN	BL BLUE
BK BLACK	GY GRAY
	RD RED

0140F00658 REV.A

NOTES:
1. SET HEAT ANTICIPATOR ON ROOM THERMOSTAT AT 0.7 AMPS.
2. MANUFACTURER'S SPECIFIED REPLACEMENT PARTS MUST BE USED WHEN SERVICING.
3. IF ANY OF THE ORIGINAL WIRE AS SUPPLIED WITH THE FURNACE MUST BE REPLACED, IT MUST BE REPLACED WITH WIRING MATERIAL HAVING A TEMPERATURE RATING OF AT LEAST 105°C. USE COPPER CONDUCTORS ONLY.
4. BLOWER SPEEDS SHOULD BE ADJUSTED BY INSTALLER TO MATCH THE INSTALLATION REQUIREMENTS SO AS TO PROVIDE THE CORRECT HEATING TEMPERATURE RISE AND THE CORRECT COOLING CFM. (SEE SPEC SHEET FOR AIR FLOW CHART)
5. UNIT MUST BE PERMANENTLY GROUNDED AND CONFORM TO N.E.C. AND LOCAL CODES.
6. TO RECALL THE LAST 5 FAULTS, MOST RECENT TO LEAST RECENT, DEPRESS SWITCH FOR MORE THAN 2 SECONDS WHILE IN STANDBY (NO THERMOSTAT INPUTS).

Wiring is subject to change. Always refer to the wiring diagram on the unit for the most up-to-date wiring.

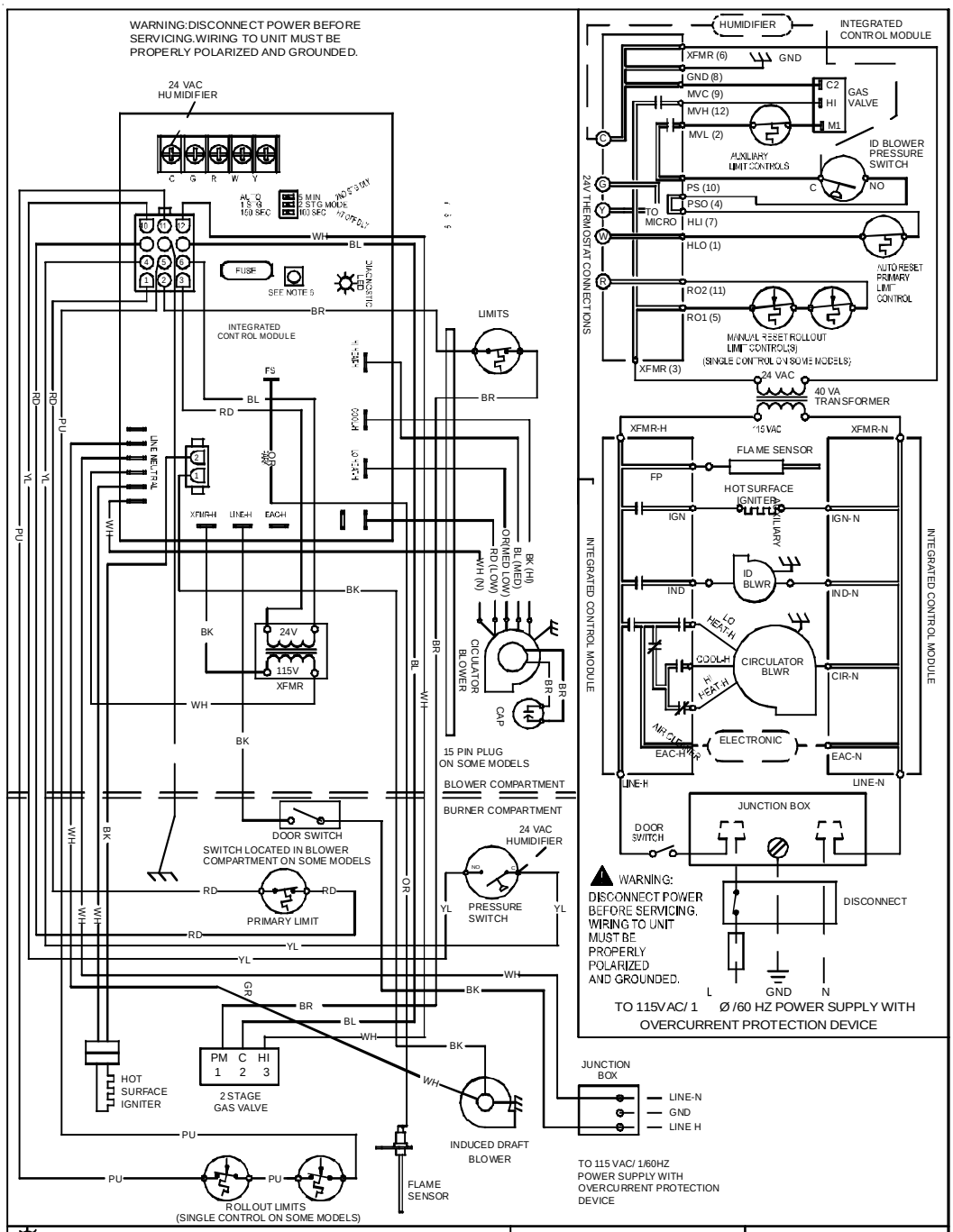

- STEADY ON = NORMAL OPERATION
- OFF = CONTROL FAILURE
- 1 FLASH = SYSTEM LOCKOUT (RETRIES/RECYCLES EXCEEDED)
- 2 FLASHES = PRESSURE SWITCH STUCK CLOSED
- 3 FLASHES = PRESSURE SWITCH STUCK OPEN
- 4 FLASHES = OPEN HIGH LIMIT
- 5 FLASHES = FLAME SENSE WITHOUT GAS VALVE
- 6 FLASHES = OPEN ROLLOUT OR OPEN FUSE
- 7 FLASHES = LOW FLAME SIGNAL
- 8 FLASHES = CHECK IGNITER OR IMPROPER GROUND
- RAPID FLASHES = REVERSED 115 VAC POLARITY/VERIFY GND

LOW VOLTAGE (24V)
LOW VOLTAGE FIELD
HI VOLTAGE (115V)
HI VOLTAGE FIELD
JUNCTION
TERMINAL
INTERNAL TO INTEGRATED CONTROL
PLUG CONNECTION

EQUIPMENT GND
FIELD GND
FIELD SPLICE
SWITCH (TEMP.)
IGNITER
SWITCH (PRESS.)
OVERCURRENT PROT. DEVICE

COLOR CODES:

YL YELLOW	PK PINK
OR ORANGE	BR BROWN
PU PURPLE	WH WHITE
GR GREEN	BL BLUE
BK BLACK	GY GRAY
	RD RED

0140F00594 REV. A

NOTES:
1. SET HEAT ANTICIPATOR ON ROOM THERMOSTAT AT 0.7 AMPS.
2. MANUFACTURER'S SPECIFIED REPLACEMENT PARTS MUST BE USED WHEN SERVICING.
3. IF ANY OF THE ORIGINAL WIRE AS SUPPLIED WITH THE FURNACE MUST BE REPLACED, IT MUST BE REPLACED WITH WIRING MATERIAL HAVING A TEMPERATURE RATING OF AT LEAST 105 °C. USE COPPER CONDUCTORS ONLY.
4. BLOWER SPEEDS SHOULD BE ADJUSTED BY INSTALLER TO MATCH THE INSTALLATION REQUIREMENTS SO AS TO PROVIDE THE CORRECT HEATING TEMPERATURE RISE AND THE CORRECT COOLING CFM. (SEE SPEC SHEET FOR AIR FLOW CHART)
5. UNIT MUST BE PERMANENTLY GROUNDED AND CONFORM TO N.E.C. AND LOCAL CODES.
6. TO RECALL THE LAST 5 FAULTS, MOST RECENT TO LEAST RECENT, DEPRESS SWITCH FOR MORE THAN 2 SECONDS WHILE IN STANDBY(NO THERMOSTAT INPUTS).

Wiring is subject to change. Always refer to the wiring diagram on the unit for the most up-to-date wiring.

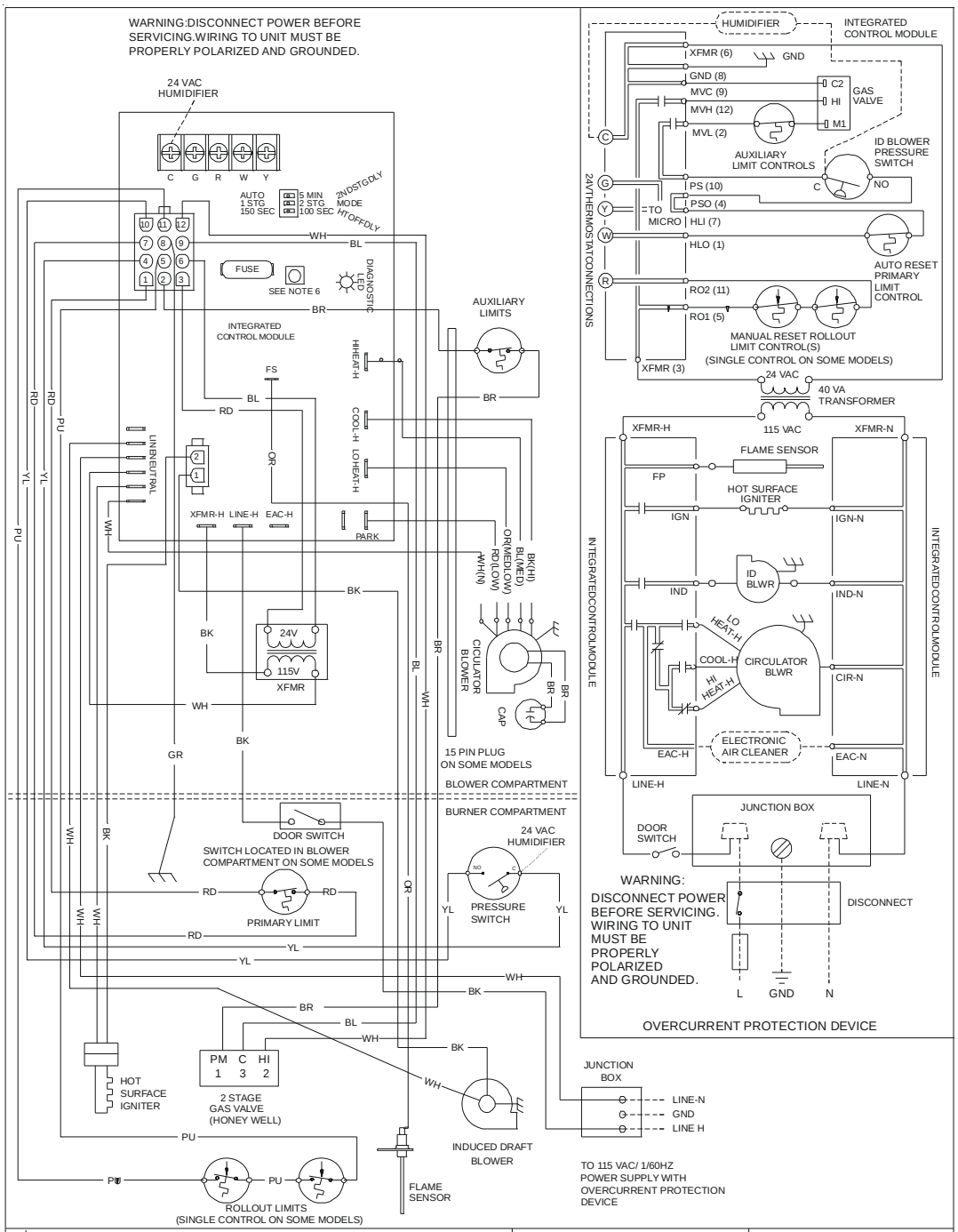

WARNING

HIGH VOLTAGE!
DISCONNECT ALL POWER BEFORE SERVICING OR INSTALLING THIS UNIT.
MULTIPLE POWER SOURCES MAY BE PRESENT. FAILURE TO DO SO MAY CAUSE PROPERTY DAMAGE, PERSONAL INJURY OR DEATH.

- STEADY ON = NORMAL OPERATION
- OFF = CONTROL FAILURE
- 1 FLASH = SYSTEM LOCKOUT (RETRIES/RECYCLES EXCEEDED)
- 2 FLASHES = PRESSURE SWITCH STUCK CLOSED
- 3 FLASHES = PRESSURE SWITCH STUCK OPEN
- 4 FLASHES = OPEN HIGH LIMIT
- 5 FLASHES = FLAME SENSE WITHOUT GAS VALVE
- 6 FLASHES = OPEN ROLLOUT OR OPEN FUSE
- 7 FLASHES = LOW FLAME SIGNAL
- 8 FLASHES = CHECK IGNITER OR IMPROPER GROUND
- RAPID FLASHES = REVERSED 115 VAC POLARITY/VERIFY GND

- LOW VOLTAGE (24V)
- LOW VOLTAGE FIELD
- HI VOLTAGE (115V)
- HI VOLTAGE FIELD
- JUNCTION
- TERMINAL
- INTERNAL TO INTEGRATED CONTROL
- PLUG CONNECTION

- EQUIPMENT GND
- FIELD GND
- FIELD SPLICE
- SWITCH (TEMP.)
- IGNITER
- SWITCH (PRESS.)
- OVERCURRENT PROT. DEVICE

COLOR CODES:

YL YELLOW	PK PINK
OR ORANGE	BR BROWN
PU PURPLE	WH WHITE
GR GREEN	BL BLUE
BK BLACK	GY GRAY
	RD RED

0140F00662 REV. A

NOTES:
1. SET HEAT ANTICIPATOR ON ROOM THERMOSTAT AT 0.7 AMPS.
2. MANUFACTURER'S SPECIFIED REPLACEMENT PARTS MUST BE USED WHEN SERVICING.
3. IF ANY OF THE ORIGINAL WIRE AS SUPPLIED WITH THE FURNACE MUST BE REPLACED, IT MUST BE REPLACED WITH WIRING MATERIAL HAVING A TEMPERATURE RATING OF AT LEAST 105 °C. USE COPPER CONDUCTORS ONLY.
4. BLOWER SPEEDS SHOULD BE ADJUSTED BY INSTALLER TO MATCH THE INSTALLATION REQUIREMENTS SO AS TO PROVIDE THE CORRECT HEATING TEMPERATURE RISE AND THE CORRECT COOLING CFM. (SEE SPEC SHEET FOR AIR FLOW CHART)
5. UNIT MUST BE PERMANENTLY GROUNDED AND CONFORM TO N.E.C. AND LOCAL CODES.
6. TO RECALL THE LAST 5 FAULTS, MOST RECENT TO LEAST RECENT, DEPRESS SWITCH FOR MORE THAN 2 SECONDS WHILE IN STANDBY(NO THERMOSTAT INPUTS).

Wiring is subject to change. Always refer to the wiring diagram on the unit for the most up-to-date wiring.

THIS PAGE LEFT INTENTIONALLY BLANK

Our continuing commitment to quality products may mean a change in specifications without notice.
© 2 01 3 - 2014 **DAIKIN MANUFACTURING COMPANY, L.P.**
5151 San Felipe St., Suite 500, Houston, TX 77056
www.daikincomfort.com