DAIKIN

INSTALLATION INSTRUCTIONS

# DC96VC & DM96VC

## TWO-STAGE GAS FURNACE

(Type FSP CATEGORY IV Direct or Non Direct Vent Air Furnace)

*Installer: Affix all manuals adjacent to the unit.*

These furnaces comply with requirements embodied in the American National Standard / National Standard of Canada ANSI Z21.47·CSA-2.3 Gas Fired Central Furnaces.

Intertek

**RECOGNIZE THIS SYMBOL AS A SAFETY PRECAUTION.**

## ATTENTION INSTALLING PERSONNEL

As a professional installer you have an obligation to know the product better than the customer. This includes all safety precautions and related items.

Prior to actual installation, thoroughly familiarize yourself with this Instruction Manual. Pay special attention to all safety warnings. Often during installation or repair it is possible to place yourself in a position which is more hazardous than when the unit is in operation.

Remember, it is your responsibility to install the product safely and to know it well enough to be able to instruct a customer in its safe use.

Safety is a matter of common sense...a matter of thinking before acting. Most dealers have a list of specific good safety practices...follow them.

The precautions listed in this Installation Manual are intended as supplemental to existing practices. However, if there is a direct conflict between existing practices and the content of this manual, the precautions listed here take precedence.

*NOTE: Please contact your distributor
or our website for the applicable
Specification Sheet referred to in this manual.

IOD-2002
6/2013

Our continuing commitment to quality products may mean a change in specifications without notice.
© 2013 DAIKIN MANUFACTURING COMPANY, L.P.
5151 San Felipe St., Suite 500, Houston, TX 77056
www.daikincomfort.com

# Table of Contents


Safety Considerations ..... 6
Shipping Inspection ..... 6
Electrostatic Discharge (ESD) Precautions ..... 6
To The Installer ..... 7
Product Description ..... 7
Features ..... 7
Product Application ..... 7
Location Requirements & Considerations ..... 8
Clearances and Accessibility ..... 9
Furnace Suspension ..... 9
Existing Furnace Removal ..... 10
Thermostat Location ..... 10
Combustion & Ventilation Air Requirements ..... 10
Installation Positions ..... 11
Horizontal Applications & Considerations ..... 11
Drain Trap and Lines ..... 11
Leveling ..... 11
Alternate Vent/Flue and Combustion Air Connections ..... 11
Alternate Electrical and Gas Line Connections ..... 12
Drain Pan ..... 12
Freeze Protection ..... 12
Furnace Suspension ..... 12
Propane Gas/High Altitude Installations ..... 12
Vent/Flue Pipe & Combustion Air Pipe ..... 12
Dual Certification: Non-Direct/Direct Vent ..... 13
Materials and Joining Methods ..... 13
Proper Vent/Flue and Combustion Air Piping Practices ..... 13
Termination Locations ..... 14
Canadian Venting Requirements ..... 14
Standard Furnace Connections ..... 14
Alternate Furnace Connections ..... 15
Non-Direct Vent (Single Pipe) Piping ..... 17
Vent/Intake Terminations For Installation of Multiple Direct Vent Furnaces ..... 19
Concentric Vent Termination ..... 20
Side Wall Vent Kit ..... 20
Condensate Drain Lines & Drain Trap ..... 20
Standard Right or Left Side Drain Hose Connections ..... 20
Upright Installations-Trap on Right Side ..... 21
Upright Installations-Trap on Left Side ..... 23
Horizontal Installations - Right Side Down ..... 24
Electrical Connections ..... 26
Wiring Harness ..... 26
115 Volt Line Connections ..... 26
Junction Box Relocation ..... 26
24 Volt Thermostat Wiring ..... 27
Single-Stage Heating Thermostat Application ..... 27
24 Volt Dehumidistat Wiring ..... 28
Fossil Fuel Applications ..... 28
115 Volt Line Connection of Accessories (Humidifier and Electronic Air Cleaner) ..... 28
24 Volt Humidifier ..... 29
Auxiliary Alarm Switch: ..... 29

# Table of Contents


Gas Supply and Piping ..... 29
High Altitude Derate ..... 30
Propane Gas Conversion ..... 30
Gas Piping Connections ..... 30
Propane Gas Tanks and Piping ..... 33
Circulating Air & Filters ..... 33
Duct work - Air Flow ..... 33
Checking Duct Static ..... 34
Bottom Return Air Opening [Upflow Models] ..... 34
Filters - Read This Section Before Installing The Return Air Duct work ..... 35
Upright Installations ..... 35
Horizontal Installations ..... 36
Startup Procedure & Adjustment ..... 36
Heat Anticipator Setting ..... 36
Drain Trap Priming ..... 36
Furnace Operation ..... 36
Gas Supply Pressure Measurement ..... 36
Gas Manifold Pressure Measurement and Adjustment ..... 38
Gas Input Rate Measurement (Natural Gas Only) ..... 38
Temperature Rise ..... 39
Circulator Blower Speeds ..... 39
Blower Heat Off Delay Timings ..... 41
ComfortNet™ System ..... 41
Overview ..... 41
Airflow Considerations ..... 42
Fossil Fuel Applications ..... 42
CTK0* Wiring ..... 42
ComfortNet System Advanced Features ..... 43
Furnace Advanced Features Menus ..... 44
Thermostat Menu ..... 46
Diagnostics ..... 46
Network troubleshooting ..... 46
System Troubleshooting ..... 47
Normal Sequence of Operation ..... 47
Power Up ..... 47
Heating Mode ..... 47
Cooling Mode ..... 47
Fan Only Mode ..... 48

# Table of Contents


Operational Checks ..... 48
Safety Circuit Description ..... 48
- Integrated Control Module ..... 48
- Primary Limit ..... 48
- Auxiliary Limit ..... 48
- Rollout Limit ..... 48
- Pressure Switches ..... 48
- Flame Sensor ..... 48
- Troubleshooting ..... 48
- Electrostatic Discharge (ESD) Precautions ..... 48
- Diagnostic Chart ..... 49
- Resetting From Lockout ..... 49

Maintenance ..... 49
- Annual Inspection ..... 49
- Filters ..... 49
- Burners ..... 49
- Induced Draft and Circulator Blowers ..... 50
- Condensate Trap and Drain System (Qualified Servicer Only) ..... 50
- Flame Sensor (Qualified Servicer Only) ..... 50
- Flue Passages (Qualified Servicer Only) ..... 50

Before Leaving an Installation ..... 50
Repair and Replacement Parts ..... 50
Dip Switches ..... 51
Status Codes ..... 52
Troubleshooting Chart ..... 53
Wiring Diagram ..... 58
Special Instructions for Products Installed in the State of Massachusetts ..... 59

**WARNING**

**DAIKIN WILL NOT BE RESPONSIBLE FOR ANY INJURY OR PROPERTY DAMAGE ARISING FROM IMPROPER SERVICE OR SERVICE PROCEDURES. IF YOU INSTALL OR PERFORM SERVICE ON THIS UNIT, YOU ASSUME RESPONSIBILITY FOR ANY PERSONAL INJURY OR PROPERTY DAMAGE WHICH MAY RESULT. MANY JURISDICTIONS REQUIRE A LICENSE TO INSTALL OR SERVICE HEATING AND AIR CONDITIONING EQUIPMENT.**

## *SAFETY CONSIDERATIONS*

Adhere to the following warnings and cautions when installing, adjusting, altering, servicing, or operating the furnace. To ensure proper installation and operation, thoroughly read this manual for specifics pertaining to the installation and application of this product.

This furnace is manufactured for use with natural gas. It may be field converted to operate on L.P. gas by using the appropriate L.P. conversion kit listed in the **PROPANE GAS/HIGH ALTITUDE INSTALLATIONS section** of this manual

Install this furnace only in a location and position as specified in **LOCATION REQUIREMENTS & CONSIDERATIONS section and INSTALLATION POSITIONS section** of this manual.

Provide adequate combustion and ventilation air to the furnace as specified in **COMBUSTION & VENTILATION AIR REQUIREMENTS section of this manual.**

Combustion products must be discharged to the outdoors. Connect this furnace to an approved vent system only, as specified in **VENT/FLUE PIPE & COMBUSTION AIR PIPE** section of this manual.

Never test for gas leaks with an open flame. Use a commercially available soap solution made specifically for the detection of leaks to check all connections, as specified in **GAS SUPPLY AND PIPING** section of this manual.

Always install a furnace to operate within the furnace's intended temperature-rise range with a duct system which has external static pressure within the allowable range, as specified on the furnace rating plate and **OPERATIONAL CHECKS section** of these instructions.

When a furnace is installed so that supply ducts carry air circulated by the furnace to areas outside the space containing the furnace, the return air shall also be handled by duct(s) sealed to the furnace casing and terminating outside the space containing the furnace.

A gas-fired furnace for installation in a residential garage must be installed as specified in the **LOCATION REQUIREMENTS AND CONSIDERATIONS section** of this manual.

This furnace may be used as a construction site heater only if certain conditions are met. These conditions are listed in the **PRODUCT APPLICATION section** of this manual.

**WARNING**

**TO PREVENT PERSONAL INJURY OR DEATH DUE TO IMPROPER INSTALLATION, ADJUSTMENT, ALTERATION, SERVICE OR MAINTENANCE, REFER TO THIS MANUAL. FOR ADDITIONAL ASSISTANCE OR INFORMATION, CONSULT A QUALIFIED INSTALLER, SERVICER AGENCY OR THE GAS SUPPLIER.**

**WARNING**

**IF THE INFORMATION IN THESE INSTRUCTIONS IS NOT FOLLOWED EXACTLY, A FIRE OR EXPLOSION MAY RESULT CAUSING PROPERTY DAMAGE, PERSONAL INJURY OR LOSS OF LIFE.**

— DO NOT STORE OR USE GASOLINE OR OTHER FLAMMABLE VAPORS AND LIQUIDS IN THE VICINITY OF THIS OR ANY OTHER APPLIANCE.

— **WHAT TO DO IF YOU SMELL GAS:**

- DO NOT TRY TO LIGHT ANY APPLIANCE.
- DO NOT TOUCH ANY ELECTRICAL SWITCH; DO NOT USE ANY PHONE IN YOUR BUILDING.
- IMMEDIATELY CALL YOUR GAS SUPPLIER FROM A NEIGHBOR'S PHONE. FOLLOW THE GAS SUPPLIER'S INSTRUCTIONS.
- IF YOU CANNOT REACH YOUR GAS SUPPLIER, CALL THE FIRE DEPARTMENT.

— INSTALLATION AND SERVICE MUST BE PERFORMED BY A QUALIFIED INSTALLER, SERVICE AGENCY OR THE GAS SUPPLIER.

**WARNING**

**THIS PRODUCT CONTAINS OR PRODUCES A CHEMICAL OR CHEMICALS WHICH MAY CAUSE SERIOUS ILLNESS OR DEATH AND WHICH ARE KNOWN TO THE STATE OF CALIFORNIA TO CAUSE CANCER, BIRTH DEFECTS OR OTHER REPRODUCTIVE HARM.**

**WARNING**

**HEATING UNIT SHOULD NOT BE UTILIZED WITHOUT REASONABLE, ROUTINE, INSPECTION, MAINTENANCE AND SUPERVISION. IF THE BUILDING IN WHICH ANY SUCH DEVICE IS LOCATED WILL BE VACANT, CARE SHOULD BE TAKEN THAT SUCH DEVICE IS ROUTINELY INSPECTED, MAINTAINED AND MONITORED. IN THE EVENT THAT THE BUILDING MAYBE EXPOSED TO FREEZING TEMPERATURES AND WILL BE VACANT, ALL WATER-BEARING PIPES SHOULD BE DRAINED, THE BUILDING SHOULD BE PROPERLY WINTERIZED, AND THE WATER SOURCE CLOSED. IN THE EVENT THAT THE BUILDING MAY BE EXPOSED TO FREEZING TEMPERATURES AND WILL BE VACANT, ANY HYDRONIC COIL UNITS SHOULD BE DRAINED AS WELL AND, IN SUCH CASE, ALTERNATIVE HEAT SOURCES SHOULD BE UTILIZED.**

**WARNING**

**TO PREVENT POSSIBLE PROPERTY DAMAGE, PERSONAL INJURY OR DEATH DUE TO ELECTRICAL SHOCK, THE FURNACE MUST BE LOCATED TO PROTECT THE ELECTRICAL COMPONENTS FROM WATER.**

**DANGER**
**PELIGRO**

**CARBON MONOXIDE POISONING HAZARD**

**Special Warning for Installation of Furnace or Air Handling Units in Enclosed Areas such as Garages, Utility Rooms or Parking Areas**

**Carbon monoxide producing devices (such as an automobile, space heater, gas water heater, etc.) should not be operated in enclosed areas such as unventilated garages, utility rooms or parking areas because of the danger of carbon monoxide (CO) poisoning resulting from the exhaust emissions. If a furnace or air handler is installed in an enclosed area such as a garage, utility room or parking area and a carbon monoxide producing device is operated therein, there must be adequate, direct outside ventilation.**

**This ventilation is necessary to avoid the danger of CO poisoning which can occur if a carbon monoxide producing device continues to operate in the enclosed area. Carbon monoxide emissions can be (re)circulated throughout the structure if the furnace or air handler is operating in any mode.**

**CO can cause serious illness including permanent brain damage or death.**

**B10259-216**

**WARNING**

**SHOULD OVERHEATING OCCUR OR THE GAS SUPPLY FAIL TO SHUT OFF, TURN OFF THE MANUAL GAS SHUTOFF VALVE EXTERNAL TO THE FURNACE BEFORE TURNING OFF THE ELECTRICAL SUPPLY.**

**WARNING**

**POSSIBLE PROPERTY DAMAGE, PERSONAL INJURY OR DEATH DUE TO FIRE, EXPLOSION, SMOKE, SOOT, CONDENSATION, ELECTRICAL SHOCK OR CARBON MONOXIDE MAY RESULT FROM IMPROPER INSTALLATION, REPAIR OPERATION, OR MAINTENANCE OF THIS PRODUCT.**

## SHIPPING INSPECTION

All units are securely packed in shipping containers tested according to International Safe Transit Association specifications. The carton must be checked upon arrival for external damage. If damage is found, a request for inspection by carrier's agent must be made in writing immediately.

The furnace must be carefully inspected on arrival for damage and bolts or screws which may have come loose in transit. In the event of damage the consignee should:

1. Make a notation on delivery receipt of any visible damage to shipment or container.
2. Notify carrier promptly and request an inspection.
3. With concealed damage, carrier must be notified as soon as possible - preferably within five days.
4. File the claim with the following support documents within a nine month statute of limitations.

- Original or certified copy of the Bill of Lading, or indemnity bond.
- Original paid freight bill or indemnity in lieu thereof.
- Original or certified copy of the invoice, showing trade and other discounts or reductions.
- Copy of the inspection report issued by carrier's representative at the time damage is reported to carrier.

The carrier is responsible for making prompt inspection of damage and for a thorough investigation of each claim. The distributor or manufacturer will not accept claims from dealers for transportation damage.

## ELECTROSTATIC DISCHARGE (ESD) PRECAUTIONS

**NOTE:** Discharge body's static electricity before touching unit. An electrostatic discharge can adversely affect electrical components.

Use the following precautions during furnace installation and servicing to protect the integrated control module from damage. By putting the furnace, the control, and the person at the same electrostatic potential, these steps will help avoid exposing the integrated control module to electrostatic discharge. This procedure is applicable to both installed and non-installed (ungrounded) furnaces.

1. Disconnect all power to the furnace. Do not touch the integrated control module or any wire connected to the control prior to discharging your body's electrostatic charge to ground.
2. Firmly touch a clean, unpainted, metal surface of the furnaces near the control. Any tools held in a person's hand during grounding will be discharged.
3. Service integrated control module or connecting wiring following the discharge process in step 2. Use caution not to recharge your body with static electricity; (i.e., do not move or shuffle your feet, do not touch ungrounded objects, etc.). If you come in contact with an ungrounded object, repeat step 2 before touching control or wires.
4. Discharge your body to ground before removing a new control from its container. Follow steps 1 through 3 if installing the control on a furnace. Return any old or new controls to their containers before touching any ungrounded object.

### To The Installer

Before installing this unit, please read this manual thoroughly to familiarize yourself with specific items which must be adhered to, including but not limited to: unit maximum external static pressure, gas pressures, BTU input rating, proper electrical connections, circulating air temperature rise, minimum or maximum CFM, and motor speed connections.

**⚠ WARNING**

**To prevent property damage, personal injury or death due to fire, do not install this furnace in a mobile home, trailer, or recreational vehicle.**

## *Product Description*

### Features

This furnace is a part of the ComfortNet™ family of products. The CTK0* ComfortNet thermostat kit allows this furnace to be installed as part of a digitally communicating system. The ComfortNet system provides automatic airflow configuration, enhanced setup features, and enhanced diagnostics. It also reduces the number of thermostat wires to a maximum of four. It may be also installed as part of a non-communicating system using a standard 24 VAC thermostat.

This product may be installed with the ComfortNet thermostat and a non-ComfortNet compatible single stage air conditioning unit. However, this reduces the benefits of the ComfortNet system as the enhancements will only apply to the furnace.

## *Product Application*

This furnace is primarily designed for residential home-heating applications. It is NOT designed or certified for use in mobile homes, trailers or recreational vehicles. Neither is it designed or certified for outdoor applications. The furnace **must** be installed indoors (i.e., attic space, crawl space, or garage area provided the garage area is enclosed with an operating door).

This furnace can be used in the following non-industrial commercial applications:

Schools, Office buildings, Churches, Retail stores,

Nursing homes, Hotels/motels, Common or office areas

In such applications, the furnace must be installed with the following stipulations:

- It must be installed per the installation instructions provided and per local and national codes.
- It must be installed indoors in a building constructed on site.
- It must be part of a ducted system and not used in a free air delivery application.
- It must not be used as a “make-up” air unit.
- It must be installed with two-pipe systems for combustion air, especially if VOC’s or other contaminants are present in the conditioned space.
- All other warranty exclusions and restrictions apply This furnace is an ETL dual-certified appliance and is appropriate for use with natural or propane gas (**NOTE:** If using propane, a propane conversion kit is required).

Dual certification means that the combustion air inlet pipe is optional and the furnace can be vented as a:

Non-direct vent (single pipe) central forced air furnace in which combustion air is taken from the installation area or from air ducted from the outside or,

Direct vent (dual pipe) central forced air furnace in which all combustion air supplied directly to the furnace burners through a special air intake system outlined in these instructions.

This furnace may be used as a construction site heater **ONLY** if all of the following conditions are met:

- The vent system is permanently installed per these installation instructions.
- A room thermostat is used to control the furnace. Fixed jumpers that provide continuous heating CANNOT be used and can cause long term equipment damage.
- Return air ducts are provided and sealed to the furnace.
- A return air temperature range between 60ºF (16ºC) and 80ºF (27ºC) is maintained.

- Air filters are installed in the system and maintained during construction replaced as appropriate during construction, and upon completion of construction.
- The input rate and temperature rise are set per the furnace rating plate.
- 100% outside air is provided for combustion air requirements during construction. Temporary ducting can be used.

  **NOTE:** Do not connect the temporary duct directly to the furnace. The duct must be sized for adequate combustion and ventilation in accordance with the latest edition of the National Fuel Gas Code NFPA 54/ANSI Z223.1 or CAN/CSA B149.1 Installation Codes.
- The furnace heat exchanger, components, duct system, air filters and evaporator coils are thoroughly cleaned following final construction clean up.
- All furnace operating conditions (including ignition, input rate, temperature rise and venting) are verified according to these installation instructions.

**NOTE:** The Commonwealth of Massachusetts requires that the following additional requirements must also be met:

- Gas furnaces must be installed by a licensed plumber or gas fitter.
- A T-handle gas cock must be used.
- If the unit is to be installed in an attic, the passageway to and the service area around the unit must have flooring.

**To ensure proper furnace operation, install, operate and maintain the furnace in accordance with these installation and operation instructions, all local building codes and ordinances.** In their absence, follow the latest edition of the National Fuel Gas Code (NFPA 54/ANSI Z223.1), and/or CAN/CSA B149 Installation Codes, local plumbing or waste water codes, and other applicable codes.

A copy of the National Fuel Gas Code (NFPA 54/ANSI Z223.1) can be obtained from any of the following:

**American National Standards Institute**
1430 Broadway
New York, NY 10018

**National Fire Protection Association**
1 Batterymarch Park
Quincy, MA 02269

**CSA International**
8501 East Pleasant Valley
Cleveland, OH 44131

The rated heating capacity of the furnace should be greater than or equal to the total heat loss of the area to be heated. The total heat loss should be calculated by an approved method or in accordance with "ASHRAE Guide" or "Manual J-Load Calculations" published by the Air Conditioning Contractors of America.

A copy of the CAN/CSA B149 Installation Codes can also be obtained from:

**CSA International**
178 Rexdale Boulevard
Etobicoke, Ontario, Canada M9W 1R3

## *Location Requirements & Considerations*

Follow the instructions listed below and the guidelines provided in the *Combustion and Ventilation Air Requirements* section when selecting a furnace location.

**WARNING**

**To prevent possible equipment damage, property damage, personal injury or death, the following bullet points must be observed when installing this unit.**

**WARNING**

**Possible property damage, personal injury or death due to fire, explosion, smoke, soot, condensation, electrical shock or carbon monoxide may result from improper installation, repair operation, or maintenance of this product.**

- Centrally locate the furnace with respect to the proposed or existing air distribution system.
- Ensure the temperature of the return air entering the furnace is between 55°F and 100°F when the furnace is heating.
- Provide provisions for venting combustion products outdoors through a proper venting system. Special consideration should be given to vent/flue pipe routing and combustion air intake pipe when applicable. Refer to *Vent/Flue Pipe and Combustion Air Pipe -Termination Locations* for appropriate termination locations and to determine if the piping system from furnace to termination can be accomplished within the guidelines given. **NOTE:** The length of flue and/or combustion air piping can be a limiting factor in the location of the furnace.
- Locate the furnace so condensate flows downwards to the drain. Do not locate the furnace or its condensate drainage system in any area subject to below freezing temperatures without proper freeze protection. Refer to *Condensate Drain Lines and Trap* for further details.
- Ensure adequate combustion air is available for the furnace. Improper or insufficient combustion air can expose building occupants to gas combustion products that could include carbon monoxide. Refer to *Combustion and Ventilation Air Requirements.*
- Set the furnace on a level floor to enable proper condensate drainage. If the floor becomes wet or damp at times, place the furnace above the floor on a concrete base sized approximately 1-1/2" larger than the base of the furnace. Refer to the *Horizontal Applications and Considerations* for leveling of horizontal furnaces.
- Ensure upflow or horizontal furnaces are not installed directly on carpeting, or any other combustible material. The only combustible material allowed is wood.
- A special accessory subbase must be used for upright counterflow unit installations over any combustible material (including wood). Refer to subbase instructions for installation details. (**NOTE:** A subbase will not be required if an air conditioning coil is located beneath the furnace between the supply air opening and the combustible floor.

- Exposure to contaminated combustion air will result in safety and performance-related problems. Do not install the furnace where the combustion air is exposed to the following substances:

  permanent wave solutions
  chlorinated waxes or cleaners
  chlorine-based swimming pool chemicals
  water softening chemicals
  deicing salts or chemicals
  carbon tetrachloride
  halogen type refrigerants
  cleaning solutions (such as perchloroethylene)
  printing inks
  paint removers
  varnishes
  hydrochloric acid
  cements and glues
  antistatic fabric softeners for clothes dryers
  and masonry acid washing materials
- Seal off a *non-direct vent* furnace if it is installed near an area frequently contaminated by any of the above substances. This protects the *non-direct vent* furnace from airborne contaminants. To ensure that the enclosed *non-direct vent* furnace has an adequate supply of combustion air, vent from a nearby uncontaminated room or from outdoors. Refer to the *Combustion and Ventilation Air Requirements* for details.
- If the furnace is used in connection with a cooling coil unit, install the furnace upstream or in parallel with the cooling coil unit. Premature heat exchanger failure will result if the cooling unit is placed ahead of the furnace.

  For vertical (upflow or downflow) applications, the minimum cooling coil width shall not be less than furnace width minus 1". Additionally, a coil installed above an upflow furnace or under a counterflow furnace may be the same width as the furnace or may be one size larger than the furnace. *Example: a "C" width coil may be installed with a "B" width furnace.*

  For upflow applications, the front of the coil and furnace must face the same direction.
- If the furnace is installed in a residential garage, position the furnace so that the burners and ignition source are located not less than 18 inches (457 mm) above the floor. Protect the furnace from physical damage by vehicles.
- If the furnace is installed horizontally, ensure the access doors are not on the "up/top" or "down/bottom" side of the furnace.
- Do not connect this furnace to a chimney flue that serves a separate appliance designed to burn solid fuel.
- On Counterflow Installations, the air conditioning coil must be downstream on the supply (positive) side of the furnace heat exchanger.
- *Counterflow Installation over a noncombustible floor.* Before setting the furnace over the plenum opening, ensure the surface around the opening is smooth and level. A tight seal should be made between the furnace base and floor by using a silicone rubber caulking compound or cement grout.
- *Counterflow Installation over a combustible floor.* If installation over a combustible floor becomes necessary, use an accessory subbase (see Specification Sheet applicable for your model for details.) A special accessory subbase must be used for upright counterflow unit installations over any combustible material including wood. Refer to subbase instructions for installation details. Follow the instructions with the subbase for proper installation. Do not install the furnace directly on carpeting, tile, or other combustible material other than wood flooring. (**NOTE**: The subbase will not be required if an air conditioning coil is installed between the supply air opening on the furnace and the floor.)

## Clearances and Accessibility

Installations must adhere to the clearances to combustible materials to which this furnace has been design certified. The minimum clearance information for this furnace is provided on the unit's clearance label. These clearances must be permanently maintained. Clearances must also accommodate an installation's gas, electrical, and drain trap and drain line connections. If the alternate combustion air intake or vent/flue connections are used additional clearance must be provided to accommodate these connections. Refer to *Vent/Flue Pipe and Combustion Air Pipe* for details. **NOTE:** In addition to the required clearances to combustible materials, a minimum of 24 inches service clearance must be available in front of the unit.

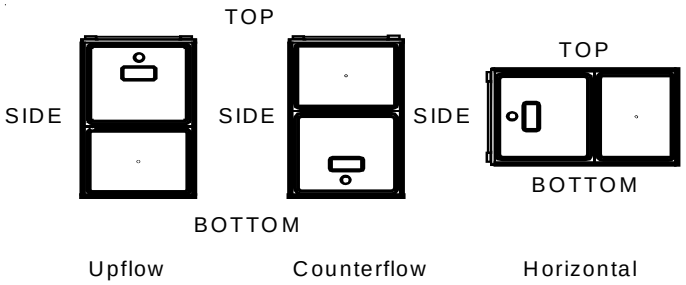


A furnace installed in a confined space (i.e., a closet or utility room) must have two ventilation openings with a total minimum free area of 0.25 square inches per 1,000 BTU/hr of furnace input rating. Refer to Specification Sheet applicable to your model for minimum clearances to combustible surfaces. One of the ventilation openings must be within 12 inches of the top; the other opening must be within 12 inches of the bottom of the confined space. In a typical construction, the clearance between the door and door frame is usually adequate to satisfy this ventilation requirement.

## Furnace Suspension

If suspending the furnace from rafters or joists, use 3/8" threaded rod and 2"x2"x1/8" angle iron as shown in the following diagram. The length of rod will depend on the application and the clearances necessary.

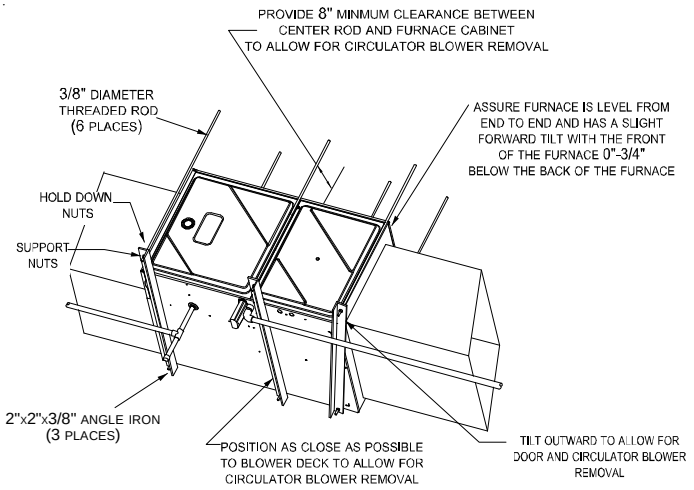


### Existing Furnace Removal

**NOTE:** When an existing furnace is removed from a venting system serving other appliances, the venting system may be too large to properly vent the remaining attached appliances.

The following vent testing procedure is reproduced from the **American National Standard/National Standard of Canada for Gas-Fired Central Furnaces ANSI Z21.4, CSA-2.3 latest edition Section 1.23.1.**

The following steps shall be followed with each appliance connected to the venting system placed in operation, while any other appliances connected to the venting system are not in operation:

1. Seal any unused openings in the venting system.

2. Inspect the venting system for proper size and horizontal pitch, as required by the National Fuel Gas Code, ANSI Z223.1 or the Natural Gas and Propane Installation Code, CSA B149.1-05 and these instructions. Determine that there is no blockage or restriction, leakage, corrosion and other deficiencies which could cause an unsafe condition.

3. As far as practical, close all building doors and windows and all doors between the space in which the appliance(s) connected to the venting system are located and other spaces of the building.

4. Close fireplace dampers.

5. Turn on clothes dryers and any appliance not connected to the venting system. Turn on any exhaust fans, such as range hoods and bathroom exhausts, so they shall operate at maximum speed. Do not operate a summer exhaust fan.

6. Follow the lighting instructions. Place the appliance being inspected in operation. Adjust thermostat so appliance shall operate continuously.

7. Test for spillage from draft hood appliances at the draft hood relief opening after 5 minutes of main burner operation. Use the flame of a match or candle.

8. If improper venting is observed during any of the above tests, the venting system must be corrected in accordance with the National Fuel Gas Code ANSI Z223.1/NFPA 54 and/or National Gas and Propane Installation Code CSA B149.1-05.

9. After it has been determined that each appliance connected to the venting system properly vents when tested as outlined above, return doors, windows, exhaust fans, fireplace dampers and any other gas burning appliance to their previous conditions of use.

If resizing is required on any portion of the venting system, use the appropriate table in Appendix G in the latest edition of the National Fuel Gas Code ANSI Z223.1 and/or CSA B149.1-05 Installation Codes.

### Thermostat Location

The thermostat should be placed approximately five feet from the floor on a vibration-free, inside wall in an area having good air circulation. Do not install the thermostat where it may be influenced by any of the following:

- Drafts, or dead spots behind doors, in corners, or under cabinets.
- Hot or cold air from registers.
- Radiant heat from the sun.
- Light fixtures or other appliances.
- Radiant heat from a fireplace.
- Concealed hot or cold water pipes, or chimneys.
- Unconditioned areas behind the thermostat, such as an outside wall.

Consult the instructions packaged with the thermostat for mounting instructions and further precautions.

## *Combustion & Ventilation Air Requirements*

**⚠ WARNING**

**To avoid property damage, personal injury or death, sufficient fresh air for proper combustion and ventilation of flue gases must be supplied. Most homes require outside air be supplied into the furnace area.**

Improved construction and additional insulation in buildings have reduced heat loss by reducing air infiltration and escape around doors and windows. These changes have helped in reducing heating/cooling costs but have created a problem supplying combustion and ventilation air for gas fired and other fuel burning appliances. Appliances that pull air out of the house (clothes dryers, exhaust fans, fireplaces, etc.) increase the problem by starving appliances for air.

House depressurization can cause back drafting or improper combustion of gas-fired appliances, thereby exposing building occupants to gas combustion products that could include carbon monoxide.

If this furnace is to be installed in the same space with other gas appliances, such as a water heater, ensure there is an adequate supply of combustion and ventilation air for the other appliances. Refer to the latest edition of the National Fuel Gas Code NFPA 54/ANSI Z223.1 or CAN/CSA B149 Installation Codes or applicable provisions of the local building codes for determining the combustion air requirements for the appliances.

Most homes will require outside air be supplied to the furnace area by means of ventilation grilles or ducts connecting directly to the outdoors or spaces open to the outdoors such as attics or crawl spaces.

## *Installation Positions*

This furnace may be installed in an upright position or horizontal on either the left or right side panel. Do not install this furnace on its back. For *upright upflow* furnaces, return air ductwork may be attached to the side panel(s) and/or basepan. For *horizontal upflow* furnaces, return air ductwork must be attached to the basepan. For both *upright or horizontal counterflow* furnaces, return ductwork must be attached to the basepan (top end of the blower compartment). **NOTE:** Ductwork must never be attached to the back of the furnace. Contact your distributor for proper airflow requirements and number of required ductwork connections. Refer to "Recommended Installation Positions" figure for appropriate installation positions, ductwork connections, and resulting airflow arrangements.

## *Horizontal Applications & Considerations*

Horizontal applications, in particular, may dictate many of the installation's specifics such as airflow direction, ductwork connections, flue and combustion air pipe connections, etc. The basic application of this furnace as a horizontal furnace differs only slightly from an upright installation. When installing a furnace horizontally, additional consideration must be given to the following:

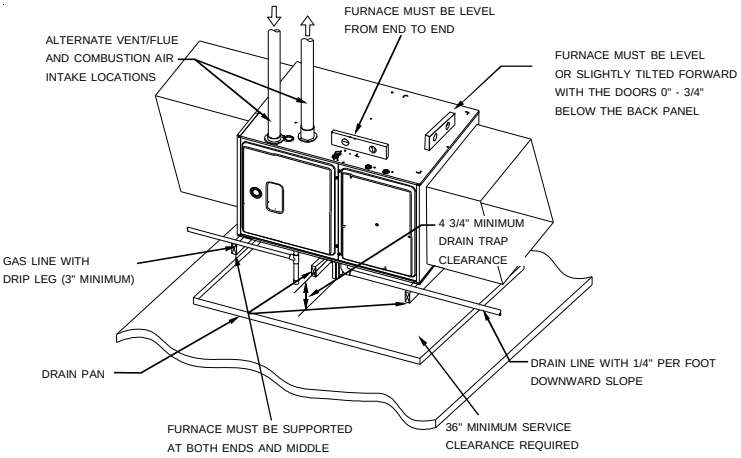


**Horizontal Furnace**

### Drain Trap and Lines

In horizontal applications the condensate drain trap is secured to the furnace side panel, suspending it below the furnace. A minimum clearance of 4 3/4 inches below the furnace must be provided for the drain trap. Additionally, the appropriate downward piping slope must be maintained from the drain trap to the drain location. Refer to *Condensate Drain Trap and Lines* for further details. If the drain trap and drain line will be exposed to temperatures near or below freezing, adequate measures must be taken to prevent condensate from freezing.

### Leveling

Leveling ensures proper condensate drainage from the heat exchanger and induced draft blower. For proper flue pipe drainage, the furnace must be level lengthwise from end to end. The furnace should also be level from back to front or have a slight tilt with the access doors downhill (approximately 3/4 inches) from the back panel. The slight tilt allows the heat exchanger condensate, generated in the recuperator coil, to flow forward to the recuperator coil front cover.

### Alternate Vent/Flue and Combustion Air Connections

In horizontal installations provisions for alternate flue and combustion air piping are available for upflow furnaces with left discharge and counterflow furnaces with right air discharge. This configuration allows the flue and combustion air piping to be run vertically through the side of the furnace. Refer to the "Recommended Installation Positions" figure for further detail. The standard piping connections may also be used in these positions. Refer to *Vent/Flue Pipe and Combustion Air Pipe* for details concerning the conversion to the alternate vent/flue and combustion air connections.

*When using the horizontal alternate vent configuration, you must use the RF000142 vent drain kit. See following illustration.*

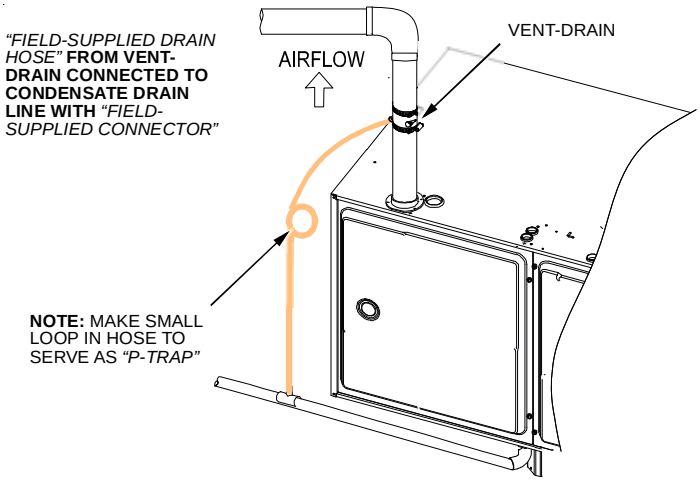


**Alternate Vent/Flue Location**

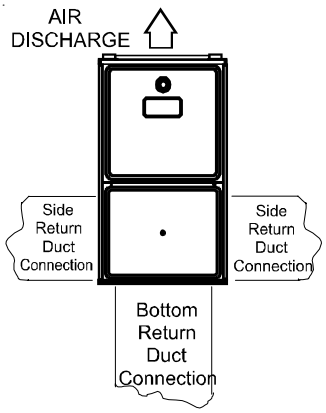


**UPFLOW UPRIGHT**

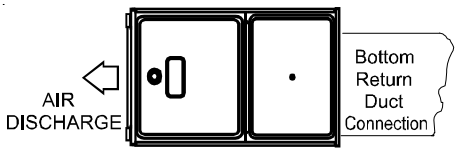


**UPFLOW HORIZONTAL LEFT AIR DISCHARGE**

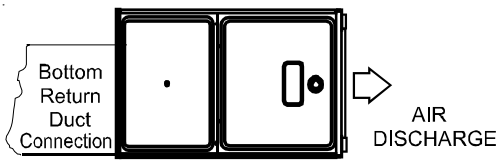


**UPFLOW HORIZONTAL RIGHT AIR DISCHARGE**

**Recommended Installation Positions**

**NOTE:** Alternate "vertical" piping connections can not be used when an upflow furnace is installed with supply air discharging to the right, or when a counterflow furnace is installed with supply air discharging to the left. In either case, use the standard flue and combustion air piping connections.

### Alternate Electrical and Gas Line Connections

This furnace has provisions allowing for electrical and gas line connections through either side panel. In horizontal applications the connections can be made either through the "top" or "bottom" of the furnace.

### Drain Pan

A drain pan must be provided if the furnace is installed above a conditioned area. The drain pan must cover the entire area under the furnace (and air conditioning coil if applicable).

### Freeze Protection

Refer to *Horizontal Applications and Conditions - Drain Trap and Lines.*

### Furnace Suspension

If the furnace is installed in a crawl space it must be suspended from the floor joist or supported by a concrete pad. Never install the furnace on the ground or allow it to be exposed to water. Refer to *Location Requirements and Considerations - Furnace Suspension* for further details.

## Propane Gas/High Altitude Installations

**WARNING**

**Possible property damage, personal injury or death may occur if the correct conversion kits are not installed. The appropriate kits must be applied to ensure safe and proper furnace operation. All conversions must be performed by a qualified installer or service agency.**

This furnace is shipped from the factory configured for natural gas at standard altitude. Propane gas installations require an orifice and orifice change to compensate for the energy content difference between natural and propane gas.

High altitude installations may require both a pressure switch and an orifice/spring change. These changes are necessary to compensate for the natural reduction in the density of both the gas fuel and the combustion air at higher altitude.

For installations above 7000 feet, please refer to the furnace Specification Sheets for required kit(s).

| Gas | Altitude | Kit | Orifice | Manifold Pressure | | Pressure Switch Change |
|---|---|---|---|---|---|---|
| | | | | High Stage | Low Stage | |
| Natural | 0-7000 | None | #43 | 3.5" w.c. | 1.9" w.c. | None |
| Propane | | LPM-06* [1] | #55 | 10.0" w.c. | 6.0" w.c. | None |

[1] LPM-06* supports both Honeywell and White-Rodgers 2-stage valves

**NOTE:** In Canada, gas furnaces are only certified to 4500 feet.

Contact the distributor for a tabular listing of appropriate manufacturer's kits for propane gas and/or high altitude installations. The indicated kits must be used to insure safe and proper furnace operation. All conversions must be performed by a qualified installer, or service agency.

## Vent/Flue Pipe & Combustion Air Pipe

**WARNING**

**Failure to follow these instructions can result in bodily injury or death. Carefully read and follow all instructions given in this section.**

**WARNING**

**Upon completion of the furnace installation, carefully inspect the entire flue system both inside and outside of the furnace to assure it is properly sealed. Leaks in the flue system can result in serious personal injury or death due to exposure to flue products, including carbon monoxide.**

A condensing gas furnace achieves its high level of efficiency by extracting almost all of the heat from the products of combustion and cooling them to the point where condensation takes place. Because of the relatively low flue gas temperature and water condensation requirements, PVC pipe is used as venting material.

In addition to PVC and ABS pipe and fittings, Innoflue® by Centrotherm Eco Systems and PolyPro® by M&G Duravent are also approved vent and combustion air materials for installations in the U.S.A. and Canada. Manufacturers Installation instructions for these products must be followed. These products have specific instructions for installing, joining and terminating. Do not mix materials or components of one manufacturer with materials or components of another manufacturer.

All furnaces are built with 2" vent / intake pipe and connectors. For furnaces requiring installation of 3" pipe, the transition from 2" to 3" should be done as close to the furnace as practically possible.

This furnace must not be connected to Type B, BW, or L vent or vent connector, and must not be vented into any portion of a factory built or masonry chimney except when used as a pathway for PVC as described later in this section. Never common vent this appliance with another appliance or use a vent which is used by a solid fuel appliance. Do not use commercially available “no hub connectors” other than those shipped with this product.

It is the responsibility of the installer to follow the manufacturers' recommendations and to verify that all vent/flue piping and connectors are compatible with furnace flue products. Additionally, it is the responsibility of the installer to ensure that all piping and connections possess adequate structural integrity and support to prevent flue pipe separation, shifting, or sagging during furnace operation.

### Dual Certification: Non-Direct/Direct Vent

This furnace is dual certified and may be installed as a non-direct vent (single pipe) or direct vent (dual pipe) appliance. A *non-direct vent* installation requires only a vent/flue pipe, while a *direct vent* installation requires both a vent/flue pipe and a combustion air intake pipe. Refer to the appropriate section for details concerning piping size, length, number of elbows, furnace connections, and terminations.

### Materials and Joining Methods

**WARNING**

**To avoid bodily injury, fire or explosion, solvent cements must be kept away from all ignition sources (i.e., sparks, open flames, and excessive heat) as they are combustible liquids. Avoid breathing cement vapors or contact with skin and/or eyes.**

Two-three-inch nominal diameter PVC Schedule 40 pipe meeting ASTM D1785, PVC primer meeting ASTM F656, and PVC solvent cement meeting ASTM D2564 specifications must be used. Fittings must be DWV type fittings meeting ASTM D2665 and ASTM D3311. Carefully follow the manufacturer's instructions for cutting, cleaning, and solvent cementing of PVC.

The use of Schedule 40 PVC or ABS cellular core (Foam Core) plastic pipe is also acceptable as a flue/vent and intake pipe material. PVC primer meeting ASTM F656 and PVC solvent cement meeting ASTM D2564 specifications must be used. Fittings must be DWV type fittings meeting ASTM D2665 and ASTM D3311. Carefully follow the manufactures instructions for cutting, cleaning and solvent cementing of PVC.

For Canadian installations; all PVC pipe, fittings and joining materials must be UL S636 listed.

As an alternative to PVC pipe, primer, solvent cement, and fittings, ABS materials which are in compliance with the following specifications may be used. Two-or-three-inch ABS Schedule 40 pipe must meet ASTM D1527 and, if used in Canada, must be CSA listed. Solvent cement for ABS to ABS joints must meet ASTM D2235 and, if used in Canada, must be CSA listed. The solvent cement for the PVC to ABS transition joint must meet ASTM D3138. Fittings must be DWV type fittings meeting ASTM D2661 and ASTM D3311 and, if used in Canada, must be CSA listed. Carefully follow the manufacturers' instructions for cutting, cleaning, and solvent cementing PVC and/or ABS.

All 90° elbows must be medium radius (1/4 bend DWV) or long radius (Long sweep 1/4 bend DWV) types conforming to ASTM D3311. A medium radius (1/4 bend DWV) elbow measures 3 1/16” minimum from the plane of one opening to the centerline of the other opening for 2” diameter pipe, and 4 9/16” minimum for 3” pipe.

### Proper Vent/Flue and Combustion Air Piping Practices

Adhere to these instructions to ensure safe and proper furnace performance. The length, diameter, and number of elbows of the vent/flue pipe and combustion air pipe (when applicable) affects the performance of the furnace and must be carefully sized. All piping must be installed in accordance with local codes and these instructions.

Some models require the use of 3” pipe. Do not transition from a 2” to 3” pipe in a horizontal section of pipe as this may create a water trap.

Piping must be adequately secured and supported to prohibit sagging, joint separation, and/or detachment from the furnace. Horizontal runs of vent/flue piping must be supported every three to five feet and must maintain a 1/4 inch per foot downward slope, back towards the furnace, to properly return condensate to the furnace's drain system. Allowances should be made for minor expansion and contraction due to temperature variations. For this reason, particular care must be taken to secure piping when a long run is followed by a short offset of less than 40 inches.

Precautions should be taken to prevent condensate from freezing inside the vent/flue pipe and/or at the vent/flue pipe termination. All vent/flue piping exposed to freezing temperatures below 35°F for extended periods of time must be insulated with 1/2” thick closed cell foam. Also all vent/flue piping exposed outdoors in excess of the terminations shown in this manual (or in unheated areas) must be insulated with 1/2” thick closed cell foam. Inspect piping for leaks prior to installing insulation.

## Termination Locations

**NOTE:** Refer to *Location Requirements and Considerations* for combustion air contaminant restrictions.

The following bullets and diagram describe the restrictions concerning the appropriate location of vent/flue pipe and combustion air intake pipe (when applicable) terminations. Refer to *Non-Direct Vent (Single Pipe) Piping* and *Direct Vent (Dual Pipe) Piping* located in this section for specific details on termination construction.

- All terminations (flue and/or intake) must be located at least 12 inches above ground level or the anticipated snow level.
- Vent terminations (non-direct and direct vent) must terminate at least 3 feet above any forced air inlet located within 10 feet.

  **NOTE:** This provision does not apply to the combustion air intake termination of a direct vent application.
- The vent termination of a *non-direct vent* application must terminate at least 4 feet below, 4 feet horizontally from, or 1 foot above any door, window, or gravity air inlet into any building.
- The vent termination of a *direct vent* application must terminate at least 12 inches from any opening through which flue gases may enter a building (door, window, or gravity air inlet).
- The vent termination of vent pipe run vertically through a roof must terminate at least 12 inches above the roof line (or the anticipated snow level) and be at least 12 inches from any vertical wall (including any anticipated snow build up).
- A vent termination shall not terminate over public walkways or over an area where condensate or vapor could create a nuisance or hazard or could be detrimental to the operation of regulators, relief valves, or other equipment.
- The combustion air intake termination of a direct vent application should not terminate in an area which is frequently dusty or dirty.

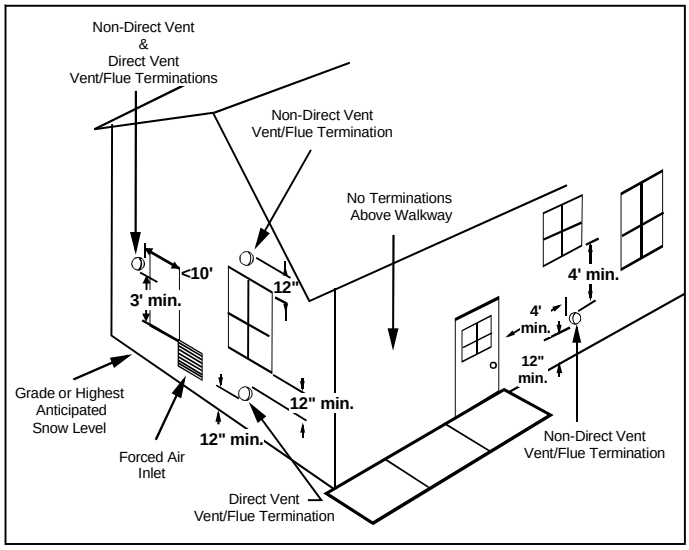


**Vent Termination Clearances**

**NOTE:** In Canada, the Canadian Fuel Gas Code takes precedence over the preceding termination restrictions.

## Canadian Venting Requirements

In Canada, venting must conform to the requirements of the current CAN/CSA-B149.1-05 Installation Code. Use only CSA-listed, ULC-S636 compliant two- or three-inch diameter PVC or ABS pipe, solvent cement, and fittings throughout. The certified piping should be clearly marked with the ULC Std "S636" on the pipe and fittings. Carefully follow the pipe manufacturers' instructions for cutting, cleaning, and solvent cementing PVC and/or ABS.

The vent can be run through an existing unused chimney provided the space between the vent pipe and the chimney is insulated and closed with a weather-tight, corrosion-resistant flashing.

## Standard Furnace Connections

It is the responsibility of the installer to ensure that the piping connections to the furnace are secure, airtight, and adequately supported.

As shipped, attachment "couplings" for vent/flue and combustion air intake pipe connections are provided on the furnace's top cover (upflow) or basepan (counterflow). To use the standard connections, field supplied vent/flue pipe and combustion air intake pipe (when applicable) should be secured directly to the furnace at these locations.

## Vent/Flue Pipe

Vent/flue pipe can be secured to the vent/flue coupling using the rubber coupling and worm gear hose clamps provided with this furnace (see "Standard Connections" figure). The rubber coupling allows separation of the vent/flue pipe from the furnace during servicing. Combustion Air and Vent piping should be routed in a manner to avoid contact with refrigerant lines, metering devices, condensate drain lines, etc. If necessary, clearances may be increased by utilizing two 45 deg. Long-Sweep Elbows and creating an "S" joint to provide additional space at connection locations. This joint can be rotated on the fitting to establish maximum clearance between refrigerant lines, metering devices, and condensate drain lines, etc. This joint is the equivalent of one 90 deg. elbow when considering elbow count.

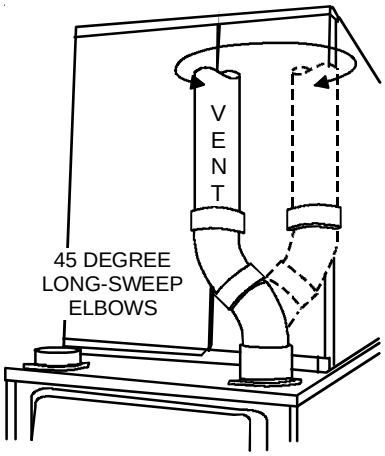


**Increased Clearance Configuration**

**NOTE:** Do not use other commercially available "no hub connectors" due to possible material conflicts. The vent/flue pipe can also be secured using a PVC or ABS elbow or coupling using the appropriate glue (see *Materials and Joining Methods)*.

**NOTE:** For *non-direct vent* installations, a minimum of one 90° elbow should be installed on the combustion air intake coupling to guard against inadvertent blockage.

### Combustion Air Pipe

#### *Direct Vent Installations*

On *upflow* units secure the combustion air intake pipe directly to the air intake coupling. On *counterflow* units secure the combustion air intake pipe to the air intake coupling using the rubber coupling and worm gear hose clamps provided with the unit. The counterflow rubber coupling allows service removal of air intake piping internal to the furnace blower compartment. **NOTE:** Because of probable material conflicts, do not use other commercially available "no hub connectors". The combustion air intake pipe can also be secured directly to the counterflow unit air intake pipe coupling.

#### *Non-Direct Vent Installations*

A minimum of one 90° elbow should be installed on the combustion air intake "coupling" to guard against inadvertent blockage.

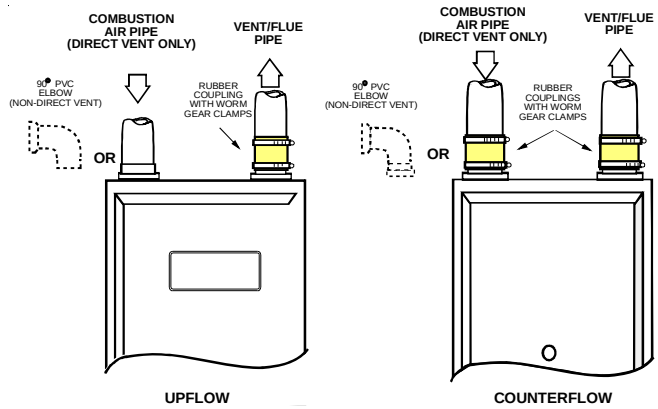


**Standard Connections**

### Alternate Furnace Connections

If the standard locations are undesirable for a specific installation, alternate side panel locations are available for both combustion air inlet and vent/flue pipe connections. These locations may be of particular benefit to upright upflow installations requiring additional access to an **A** coil, or to upright counterflow installations requiring additional access to a filter or electronic air cleaner, or to horizontal installations desiring vent/flue (and combustion air intake) piping run vertically from the side of the cabinet.

**NOTE:** Standard and alternate locations can be combined (i.e., an installation may use the standard combustion air intake location but use the alternate vent/flue location or vice versa), if needed.

**WARNING**

**Edges of sheet metal holes may be sharp. Use gloves as a precaution when removing hole plugs.**

### Alternate Vent/Flue Location

The alternate vent/flue location is the large hole directly in line with the induced draft blower outlet. To use the alternate vent/flue location refer to the following steps and the "Alternate Vent/Flue Location" figure.

**NOTE:** Counterflow instructions follow the upflow instructions.

1. Remove and save the four screws securing the vent/flue coupling to the furnace top panel.

   *Counterflow* units.

   Remove and save the four screws securing the vent/flue coupling to the furnace basepan. Also remove the three screws securing the furnace's internal vent/flue piping to the blower deck.
2. *Upflow* and *Counterflow* units.

   Loosen the worm gear hose clamps on the rubber elbow and detach it from both the induced draft blower and the vent/flue pipe.
3. *Upflow* and *Counterflow* units.

   Remove the vent/flue pipe from the furnace.
4. Cut the vent/flue pipe 3.75 inches from the flanged end of the pipe (see "Vent/Flue Pipe Cuts" figure). The section of pipe attached to the coupling will reach through the side panel to the induced draft blower. Discard remaining pipe and elbows.

*Counterflow* units.

Cut the vent/flue pipe 3.75 inches from the blower deck coupling (see "Vent/Flue Pipe Cuts" figure). Save vent/flue pipe attached to blower deck coupling for use in the alternate location. Discard remaining pipe and elbows.

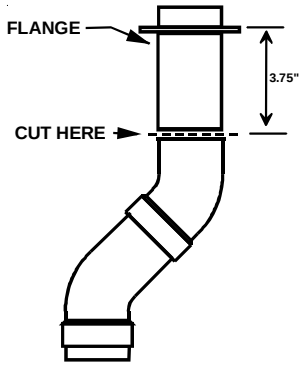


**Vent/Flue Pipe Cuts**

5. Remove plastic plug from alternate vent/flue location. Relocate and install plug in standard vent/flue location (top cover).

   *Counterflow* units.

   Remove plastic plug from alternate vent/flue location. Relocate and install plug in standard vent/flue location (basepan). Plug remaining hole in blower deck with plastic plug included in the drain kit bag.

6. *Upflow* and *Counterflow* units.

   Insert cut section of vent/flue pipe and coupling into alternate vent/flue location. Using a rubber coupling and worm gear hose clamps from the drain kit bag, attach the vent/flue pipe and coupling to the induced draft blower. Secure the coupling to the cabinet using the screws removed in step 1 or with field-supplied 3/8" #8 self drilling screws.

**WARNING**

**THE RUBBER ELBOW IS NOT DESIGNED TO SUPPORT A LOAD. WHEN THE RUBBER ELBOW IS MOUNTED EXTERNALLY TO THE FURNACE CABINET, EXTREME CARE MUST BE TAKEN TO ADEQUATELY SUPPORT FIELD-SUPPLIED VENT/FLUE PIPING, AS DAMAGE CAN RESULT IN LEAKS CAUSING BODILY INJURY OR DEATH DUE TO EXPOSURE TO FLUE GASES, INCLUDING CARBON MONOXIDE**

7. *Upflow* and *Counterflow* units.

   For **upright installations**, externally mount the rubber elbow to the vent/flue coupling using a worm gear hose clamp. Secure field supplied vent/flue piping to the rubber elbow using a worm gear hose clamp. **NOTE:** Use of the alternate vent/flue location for upright installations, requires the drain trap be installed on the same side of the unit as the flue pipe.

8. *Upflow* and *Counterflow* units.

   For ***horizontal installations***, externally secure the field-supplied vent/flue pipe directly to the vent/flue coupling using a PVC or ABS coupling or elbow.

### ALTERNATE COMBUSTION AIR INTAKE LOCATION - COUNTERFLOW/ HORIZONTAL MODELS ONLY

The alternate combustion air intake location consists of a large, unobstructed hole (alternate vent connection is aligned with the Induced Draft Blower). To use the alternate combustion air intake location, refer to the following steps, and the "Alternate Combustion Air Intake Location" figures.

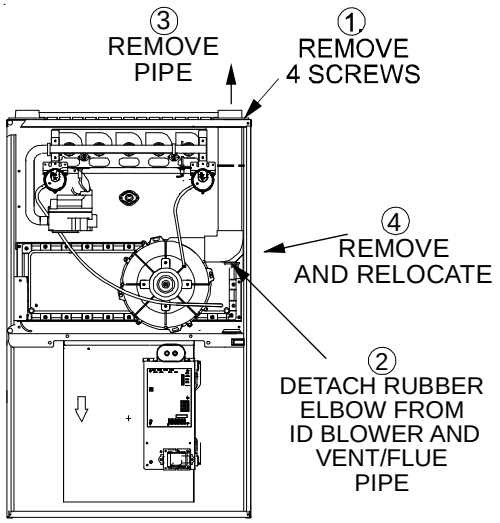


UPFLOW

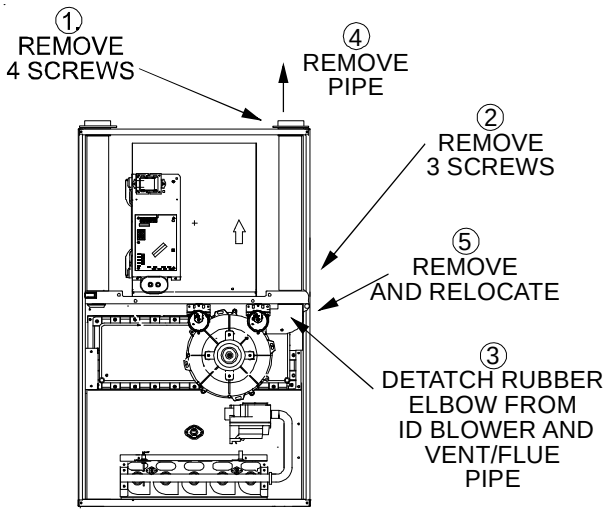


COUNTERFLOW

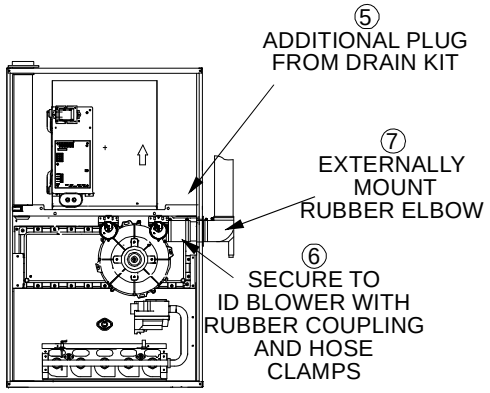


COUNTERFLOW/UPRIGHT
(UPFLOW SIMILAR)

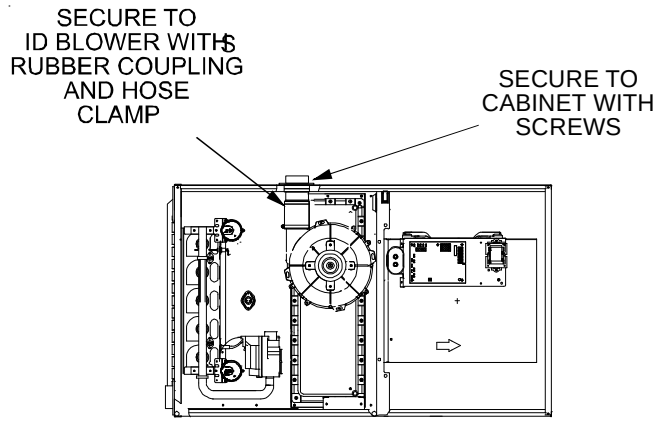


UPFLOW/HORIZONTAL
(COUNTERFLOW SIMILAR)

1. Remove and save the four screws securing the combustion air intake coupling to the basepan. Remove an additional three screws securing the furnace's internal combustion air intake pipe to the blower deck.
2. Remove the combustion air intake pipe from the furnace and cut the pipe at the basepan coupling. Save the basepan coupling and gasket from the blower deck coupling for use in the alternate location. Discard the remaining pipe.
3. Remove plastic plug from alternate combustion air intake location. Relocate and install plug in standard air intake location (basepan). Plug the remaining hole in the blower deck with the plastic plug included in the drain kit bag.
4. With the gasket facing the cabinet side panel, and the flange's flat spot facing forward, secure the combustion air intake coupling to the cabinet using the screws removed in step 1 or with field-supplied 3/8" #8 self -drilling screws.

**CAUTION**

**BE SURE NOT TO DAMAGE INTERNAL WIRING OR OTHER COMPONENTS WHEN REINSTALLING COUPLING AND SCREWS.**

5. For ***non-direct vent installations*** installed *horizontally*, a minimum of one 90° elbow should be installed on the combustion air intake coupling to guard against inadvertent blockage. No elbow is required on the alternate combustion air intake of *upright* installations, however, a minimum clearance of 2 inches is required to assure proper air supply.
6. For ***direct vent installations***, secure field-supplied combustion air intake pipe directly to the air intake coupling.

   **NOTE:** A PVC coupling or elbow is required on counterflow units.

## NON-DIRECT VENT (SINGLE PIPE) PIPING

*Non-direct vent* installations require only a vent/flue pipe. The vent pipe can be run horizontally with an exit through the side of the building or run vertically with an exit through the roof of the building. The vent can also be run through an existing *unused* chimney; however, it must extend a minimum of 12 inches above the top of the chimney. The space between the vent pipe and the chimney must be closed with a weather-tight, corrosion-resistant flashing.

For details concerning connection of the vent/flue pipe to the furnace, refer to *Vent/Flue Pipe and Combustion Air - Standard Furnace Connections* or *Alternate Furnace Connections* for specific details. Refer to the following *Non-Direct Vent (Single Pipe) Piping - Vent/Flue Pipe Terminations* for specific details on termination construction.

Although *non-direct vent* installations do not require a combustion air intake *pipe*, a minimum of one 90° elbow should be attached to the furnace's combustion air intake *if*: an upright installation uses the standard intake location, or a horizontal installation uses the alternate air intake location. This elbow will guard against inadvertent blockage of the air intake.

### VENT/FLUE PIPE LENGTHS AND DIAMETERS

**NOTE:** If either a 90 degree or 45 degree elbow is used for termination, it must be pointed downward.

Refer to the following table for applicable length, elbows, and pipe diameter for construction of the vent/flue pipe system of a non-direct vent installation. In addition to the vent/flue pipe, a single 90° elbow should be secured to the combustion air intake to prevent inadvertent blockage. The tee used in the vent/flue termination must be included when determining the number of elbows in the piping system.

| DC96VC & DM96VC Direct Vent (2 - Pipe) and Non-Direct Vent (1- Pipe) (6) | | | | | | | | | | |
|---|---|---|---|---|---|---|---|---|---|---|
| Maximum Allowable Length of Vent/Flue Pipe & Combustion Air Pipe (ft) (1) (2) | | | | | | | | | | |
| Unit Input (Btu) | Pipe Size (4) (in.) | Number of Elbows (3) (5) | | | | | | | | |
| | | 0 | 1 | 2 | 3 | 4 | 5 | 6 | 7 | 8 |
| 45,000 | 2 or 2 1/2 | 220 | 215 | 210 | 205 | 200 | 195 | 190 | 185 | 180 |
| 70,000 | 2 or 2 1/2 | 200 | 195 | 190 | 185 | 180 | 175 | 170 | 165 | 160 |
| 90,000 | 2 or 2 1/2 | 30 | 25 | 20 | 15 | 10 | NA | | | |
| 90,000 | 3 | 105 | 98 | 91 | 84 | 77 | 70 | 63 | 56 | 49 |
| 115,000 | 3 | 119 | 112 | 105 | 98 | 91 | 84 | 77 | 70 | 63 |

1) Maximum allowable limits listed on individual lengths for inlet and flue and NOT a combination.

2) Minimum requirement for each vent pipe is five (5) feet in length and one elbow/tee.

3) Tee used in the vent/flue termination must be included when determining the number of elbows in the piping system.

4) 2 1/2" or 3" diameter pipe can be used in place of 2" diameter pipe.

5) Increased Clearance Configurations using (2) 45 deg. Long Sweep elbows should be considered equivalent to one 90 deg. elbow.

6) One 90° elbow should be secured to the combustion air intake connection.

## Vent/Flue Pipe Terminations

The vent/flue pipe may terminate vertically, as through a roof, or horizontally, as through an outside wall.

Vertical vent/flue pipe terminations should be as shown in the following figure. Refer to *Vent/Flue Pipe and Combustion Air Pipe - Termination Locations* for details concerning location restrictions. The penetration of the vent through the roof must be sealed tight with proper flashing such as is used with a plastic plumbing vent.

Horizontal vent/flue pipe terminations should be as shown in the following figure. Refer to *Vent/Flue Pipe and Combustion Air Pipe - Termination Locations* for details concerning location restrictions. A 2 3/8" diameter wall penetration is required for 2" diameter pipe. A 3" diameter hole is required for a 2 1/2" pipe and a 3 1/2" diameter hole is required for 3" diameter pipe. To secure the pipe passing through the wall and prohibit damage to piping connections, a coupling should be installed on either side of the wall and solvent cemented to a length of pipe connecting the two couplings. The length of pipe should be the wall thickness plus the depth of the socket fittings to be installed on the inside and outside of the wall. The wall penetration should be sealed with silicone caulking material.

In a basement installation, the vent/flue pipe can be run between joist spaces. If the vent pipe must go below a joist and then up into the last joist space to penetrate the header, two 45° elbows should be used to reach the header rather than two 90° elbows.

***NOTE: Terminate both pipes in the same pressure zone (same side of roof, no major obstacles between pipes, etc.).***

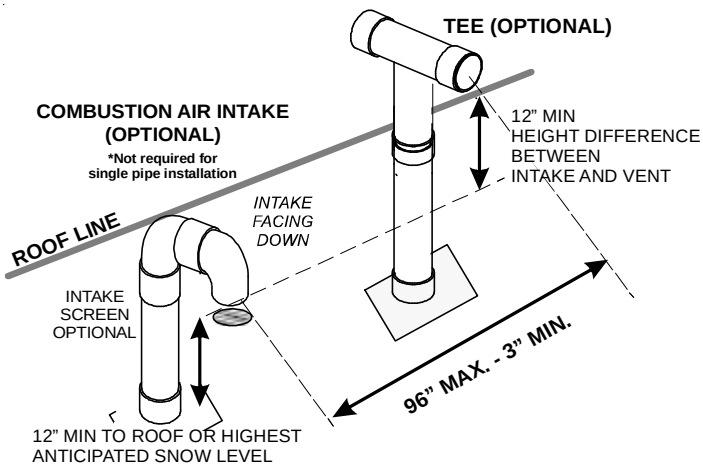


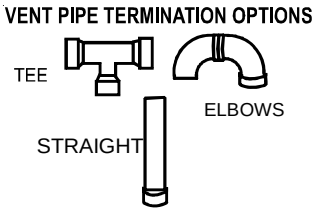


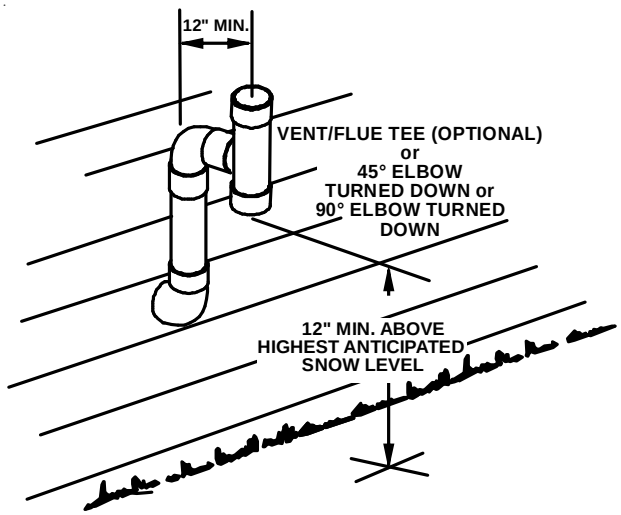


**Horizontal Termination (Single Pipe) Above Highest Anticipated Snow Level**

## Direct Vent (Dual Pipe) Piping

The inlet air screens provided in the installation instruction packet are available for the installer to use in the inlet of the combustion air pipe to prevent animals from building nests in the combustion air pipe. Installation of screens, while strongly recommended, is not required and will not affect performance of the unit.

*Direct vent* installations require both a combustion air intake and a vent/flue pipe. The pipes may be run horizontally and exit through the side of the building or run vertically and exit through the roof of the building. The pipes may be run through an existing *unused* chimney; however, they must extend a minimum of 12 inches above the top of the chimney. The space between the pipes and the chimney must be closed with a weather tight, corrosion resistant flashing. Both the combustion air intake and a vent/flue pipe terminations must be in the same atmospheric pressure zone. Refer to *Vent/Flue and Combustion Air Pipe - Termination Locations* or *Concentric Vent Termination* for specific details on termination construction. For details concerning connection of pipes to the furnace, refer to the *Vent/Flue Pipe and Combustion Pipe - Standard Furnace Connections* or *Alternate Furnace Connections.*

## Vent/Flue & Combustion Air Pipe Lengths & Diameters

Refer to the following table for applicable length, elbows, and pipe diameter for construction of the vent/flue and combustion air intake pipe systems of a direct vent (dual pipe) installation. The number of elbows tabulated represents the number of elbows and/or tees in each (Vent/Flue & Combustion Air Intake) pipe. Elbows and/or tees used in the terminations must be included when determining the number of elbows in the piping systems.

If the combustion air intake pipe is to be installed above a finished ceiling or other area where dripping of condensate will be objectionable, insulation of the combustion air pipe may be required. Use 1/2" thick closed cell foam insulation such as Armaflex™ or Insultube™ where required.

## VENT/FLUE AND COMBUSTION AIR PIPE TERMINATIONS

The vent/flue and combustion air pipes may terminate vertically, as through a roof, or horizontally, as through an outside wall.

Vertical pipe terminations should be as shown in the following figure. *Refer to Vent/Flue Pipe and Combustion Pipe - Termination Locations* for details concerning location restrictions. The penetrations through the roof must be sealed tight with proper flashing such as is used with a plastic plumbing vent.

Horizontal terminations should be as shown in the following figure. Refer to *Vent/Flue Pipe and Combustion Pipe - Termination Location* for location restrictions. A 2 3/8" diameter wall penetration is required for 2" diameter pipe. A 3" diameter hole is required for a 2 1/2" pipe and a 3 1/2" diameter hole is required for 3" diameter pipe. The wall penetration should be sealed with silicone caulking material.

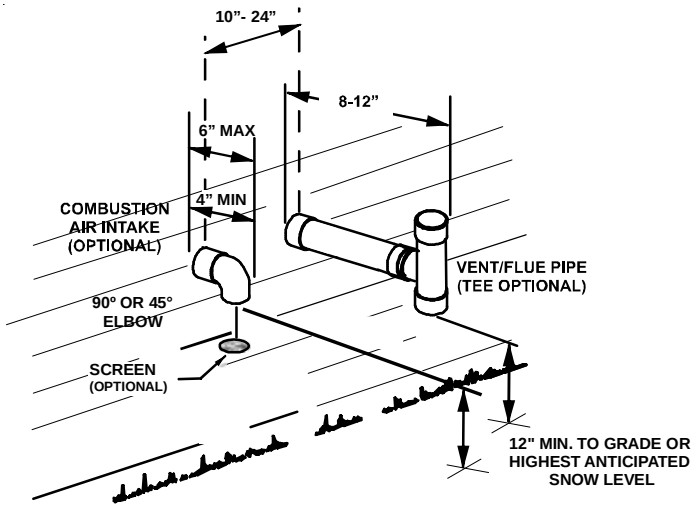


**Standard Horizontal Terminations (Dual Pipe)**

### Vent & Combustion Air Intake Measurements for Standard Horizontal Terminations (Dual Pipe)

Center to center = 10" min / 24" max.

Vertical separation: 0" - 24"

Vent termination from wall = 8" min / 12" max.

Combustion air intake from wall = 6" max.

Vent and intake clearance to ground
or anticipated snow level = 12" min.

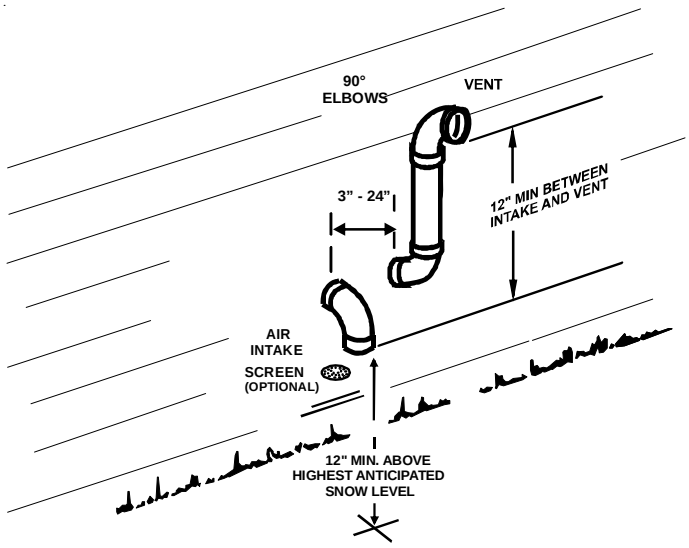


**Alternate Horizontal Vent Termination (Dual Pipe)**

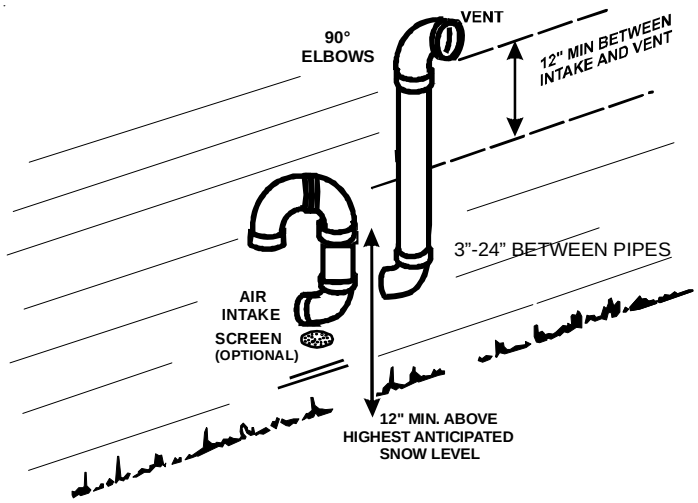


Combustion Air Intake may also be snorkeled to obtain 12" min ground clearance.

**Alternate Vent Termination Above Anticipated Snow Level (Dual Pipe)**

## VENT/INTAKE TERMINATIONS FOR INSTALLATION OF MULTIPLE DIRECT VENT FURNACES

If more than one direct vent furnace is to be installed vertically through a common roof top, maintain the same minimum clearances between the exhaust vent and air intake terminations of adjacent units as with the exhaust vent and air intake terminations of a single unit.

If more than one direct vent furnace is to be installed horizontally through a common side wall, maintain the clearances as in the following figure. Always terminate all exhaust vent outlets at the same elevation and always terminate all air intakes at the same elevation.

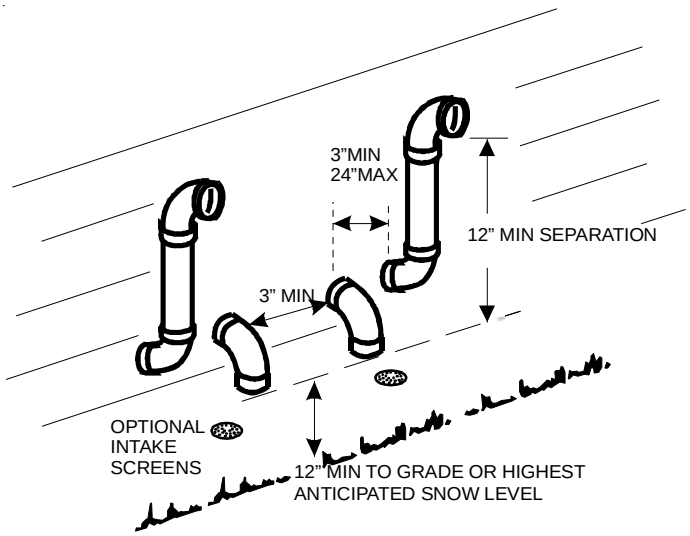


**Termination of Multiple Direct Vent Furnaces**

### Concentric Vent Termination

*Refer to the directions provided with the Concentric Vent Kit (DCVK) for installation specifications.*

### Side Wall Vent Kit

This kit is to be used with 2" or 3" direct vent systems. The vent kit must terminate outside the structure and may be installed with the intake and exhaust pipes located side-by-side or with one pipe above the other. This kit is **NOT** intended for use with single pipe (indirect vent) installations.

***Refer to the directions furnished with the Side Wall Vent Kit (p/n 0170K00000S) for installation specifications.***

## *Condensate Drain Lines & Drain Trap*

A condensing gas furnace achieves its high level of efficiency by extracting almost all of the heat from the products of combustion and cooling them to the point where condensation takes place. The condensate which is generated must be piped to an appropriate drain location.

In *upright* installations, the furnace's drain hoses may exit either the right or left side of the furnace. **NOTE:** If the alternate vent/flue outlet is utilized in an upright installation, the drain trap and drain connections must be located on the same side as the alternate vent/flue outlet.

In *horizontal* installations, the drain hoses will exit through the bottom (down side) of the unit with the drain trap suspended beneath the furnace. The field-supplied drain system must be in accordance with all local codes and the instructions in the following sections.

Follow the bullets listed below when installing the drain system. Refer to the following sections for specific details concerning furnace drain trap installation and drain hose hook ups.

- The drain trap supplied with the furnace must be used.
- The drain line between furnace and drain location must be constructed of 3/4" PVC.
- The drain line between furnace and drain location must maintain a 1/4 inch per foot downward slope toward the drain.
- Do not trap the drain line in any other location than at the drain trap supplied with the furnace.
- Do not route the drain line outside where it may freeze.
- If the drain line is routed through an area which may see temperatures near or below freezing, precautions must be taken to prevent condensate from freezing within the drain line.
- If an air conditioning coil is installed with the furnace, a common drain may be used. An open tee must be installed in the drain line, near the cooling coil, to relieve positive air pressure from the coil's plenum. This is necessary to prohibit any interference with the function of the furnace's drain trap.

### Standard Right or Left Side Drain Hose Connections

All installations positions require the use of the drain trap, hoses, tubes, and clamps. The following quantity of hoses, tubes, and hose clamps are provided with the unit.

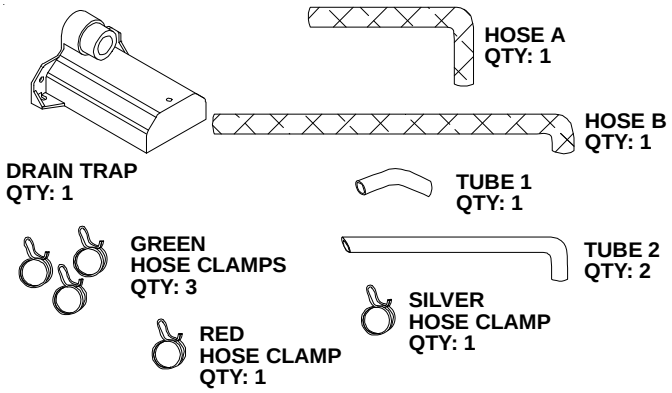


**Hose and Tube Identification**

## UPRIGHT INSTALLATIONS-TRAP ON RIGHT SIDE

In a upright installation drain hoses are connected to drain ports on the rubber elbow and the recuperator coil front cover. The drain lines are then routed through the right side panel and into the drain trap secured to the outside of the cabinet.

**NOTE:** Refer to *Alternate Vent/Flue Hose Connections* for upright installations using an alternate vent/flue outlet.

1. Remove the rubber plug from the right side of the front cover drain port.
2. Secure Hose A to front cover drain port with a red hose clamp. Route hose to rear side panel grommet hole.
3. Cut and remove 1/4 inch from the end of the drain port on the rubber elbow.
4. Insert Tube 1 into rubber elbow drain port and secure with silver hose clamp. Angle tube outward toward front of furnace.
5. Cut 17 3/4 inches from the long end of Hose B and discard. Secure the remaining hose to Tube 1 with a green hose clamp. Route the other end of Hose B to front right side panel grommet hole.

For details concerning mounting of the drain trap, refer to *Horizontal Drain Trap Mounting.*

6. Insert short end of each of tube 2 through side panel grommet holes. Secure tubes to hoses A and B with green hose clamps. Ensure hoses and tubes maintain a downward slope for proper drainage and that they are not kinked or binding.

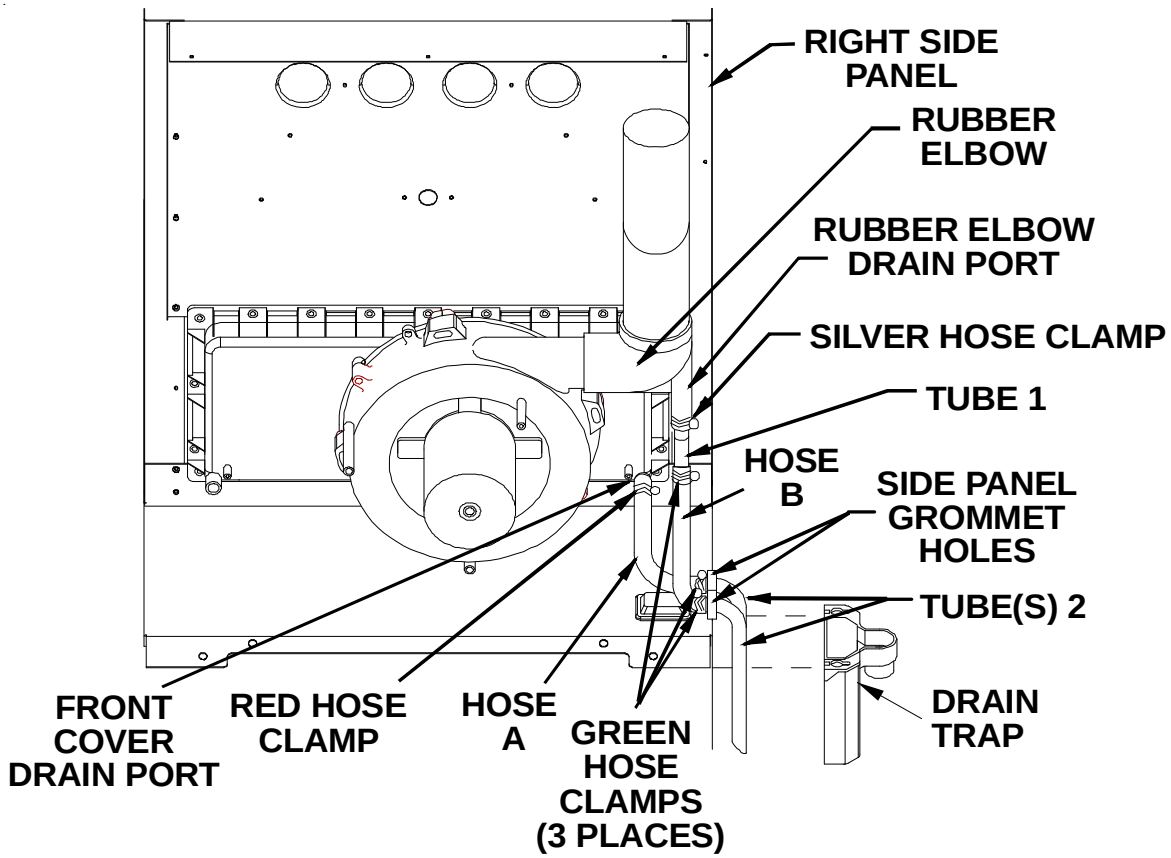


**Upright "Standard" Connections - Right Side (Upflow Shown, Counterflow Similar)**

### Alternate Vent/Flue Drain Hose Connections

Upright installations using the *alternate* vent/flue outlet will require "right-side only" drain hoses to be connected as follows. Refer to *Vent/Flue Pipe and Combustion Air Pipe* for details on alternate vent/flue pipe connection.

1. Remove the rubber plug/cap from the right-side drain port on the front cover . Save for use in step 3.
2. Secure Hose A to front cover drain port with a red hose clamp. Route hose to rear right side panel grommet hole.
3. Remove grommet from front right-side panel drain hole. Seal hole in grommet with large end of plug. Reinstall grommet and plug into side panel drain hole.
4. Cut 1/4 inch from the end of the drain port on the externally mounted rubber elbow. Discard cut portion.
5. Insert Tube 1 into rubber elbow drain port and secure with a silver hose clamp. Angle tube toward trap.
6. Cut 17 3/4 inches from the long end of Hose B and discard.
7. Secure straight end of Hose B to exposed end of Tube 1 with a green hose clamp. Route hose toward right side panel grommet holes.
8. Insert short end of one Tube 2 through rear right side panel grommet drain hole. Secure tube to Hose A with a green hose clamp.
9. Insert short end of remaining Tube 2 into Hose B from rubber elbow and secure with green hose clamp. Ensure hoses and tubes maintain a downward slope for proper drainage and are not kinked or binding.

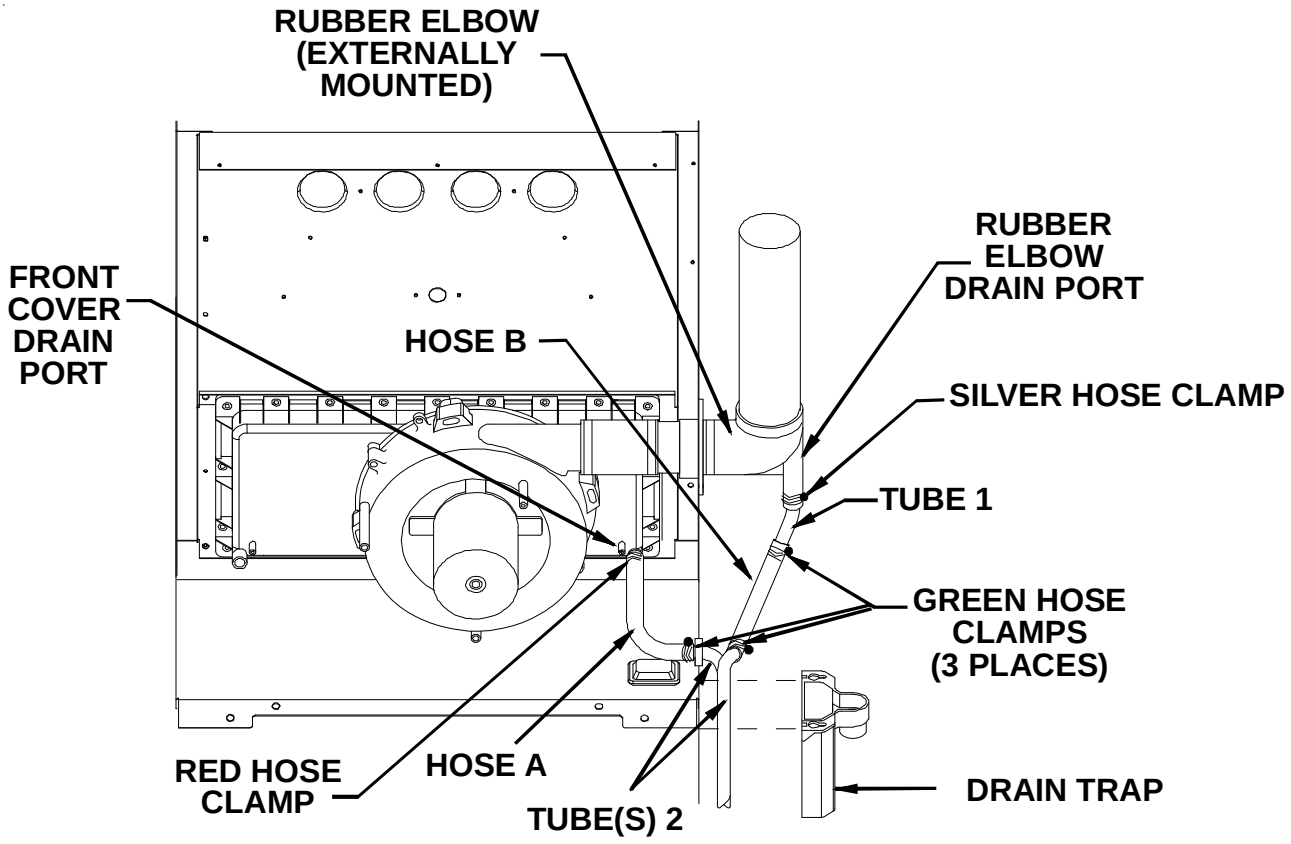


**Upright "Alternate" Connections - Right Side Only (Upflow Shown, Counterflow Similar)**

## UPRIGHT INSTALLATIONS-TRAP ON LEFT SIDE

**NOTE:** For left side trap installation, grommets must be moved to the left side of the furnace and the plugs installed on the right side of the furnace.

1. Remove the rubber plug/cap from the left side drain port on the front cover.
2. Secure Hose A to front cover drain port with a red hose clamp. Route hose to rear side panel grommet hole.
3. Cut and remove 1/4 inch from the end of the drain port on the rubber elbow.
4. Insert Tube 1 into rubber elbow drain port and secure with silver hose clamp. Angle tube outward toward front of furnace.
5. Cut "X" inches from the long end of Hose B and discard. Refer to table for appropriate length to cut. Secure remaining hose to Tube 1 with a green hose clamp. Route other end of Hose B to front left side panel grommet hole.

**NOTE:** Long hose "B" must always be connected to Tube 1 and the elbow and not on the front cover.

6. Insert short end of each Tube 2 through side panel grommet holes. Secure tubes to Hose A and Hose B with green hose clamps. Ensure hoses and tubes maintain a downward slope for proper drainage and that they are not kinked or binding.

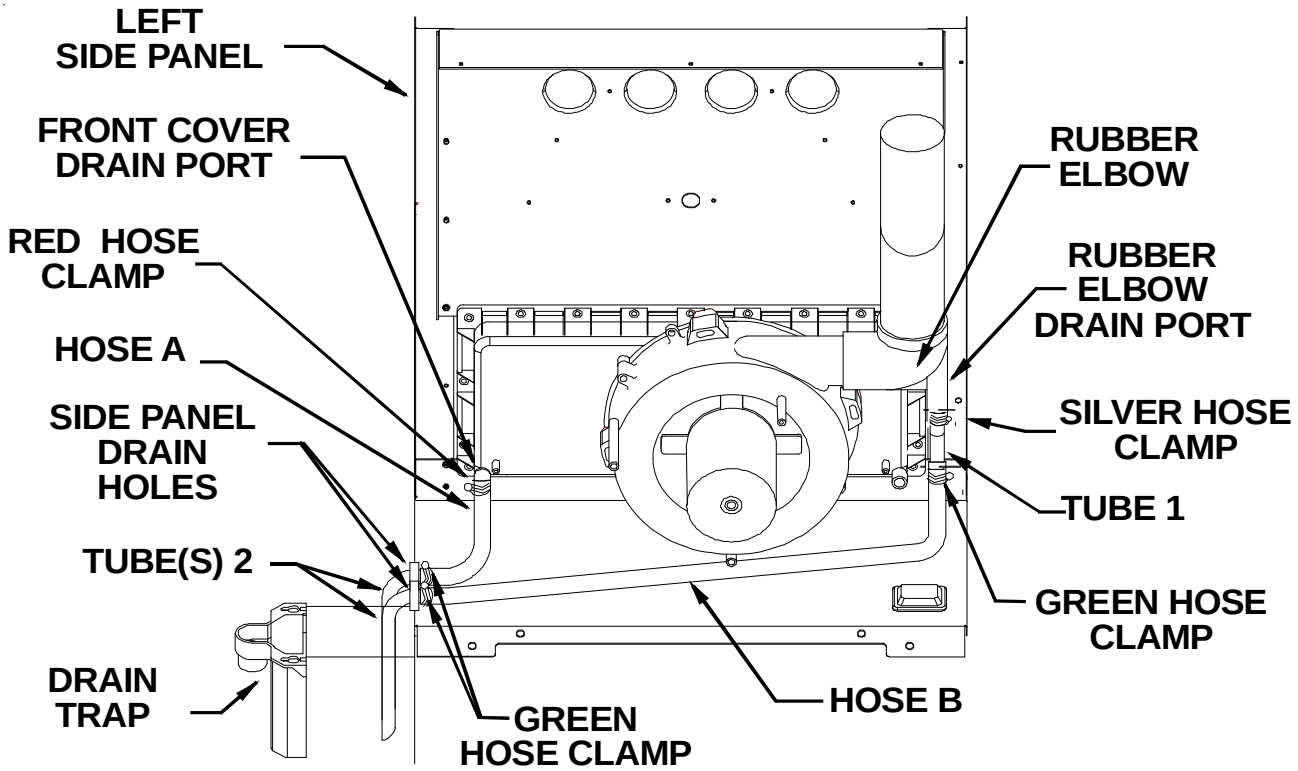


**Upright "Standard" Connections - Left Side (Upflow Shown, Counterflow Similar)**

| Cabinet Width (inches) | Models (kBTU_Tons) | "X" Length to Cut From Long End of Hose B (inches) |
|---|---|---|
| 17 1/2 | 45_3 | 7 |
| 21 | 70_4 | 3 1/2 |
| 24 1/2 | 090_5 | None |
| | 115_5 | |

### Upright Drain Trap Mounting (Left or Right Side Panel)

1. Insert drain tubes into drain trap and position the drain trap against the side panel. **NOTE:** Drain tubes must reach the bottom of the drain trap.
2. Secure drain trap to side panel at the mounting holes (dimples or crosshairs on counterflow models) located below the grommet drain holes.
3. Attach PVC drain line to drain trap outlet with either a 90° elbow or coupling.

### Horizontal Installations - Right Side Down

Horizontal installations with the right side down require that the drain hoses be connected to the right side front cover drain port and the rubber elbow drain port.

**NOTE:** On counterflow models, relocation of the front cover pressure switch hose is required.

Make connections as follows:

1. Remove the rubber plug/cap from right side of the front cover drain port.

   *Counterflow furnaces*

   Relocate the front cover pressure switch hose connection from the left side pressure tap to the right (down) side tap. The pressure switch hose must be connected to the down side to guard against blocked drain conditions.

   Cut hose to appropriate length to minimize sagging. Plug left (unused) pressure tap with plug removed from right side.
2. Secure Hose A to front cover drain tap with a red hose clamp. Route hose to rear right (down) side panel grommet holes.
3. Cut 1/4 inch from the end of the drain port on the rubber elbow and discard.
4. Insert Tube 1 into rubber elbow drain port and secure with a silver hose clamp. Angle tube outward toward front of furnace.
5. Cut 17 3/4 inches from the long end of Hose B and discard.
6. Secure remaining end of Hose B to exposed end of Tube 1 with a green hose clamp. Route hose to front right down side panel grommet holes.
7. Cut 5 1/2 inches straight length from the long end of each Tube 2 and discard the radius pieces.
8. Insert approximately one inch of each Tube 2 through the right down side panel grommet holes. Secure tubes to Hose A and Hose B using green hose clamps. Ensure hoses and tubes maintain a downward slope for proper drainage and are not kinked or bound.

For details concerning mounting of the drain trap, refer to *Condensate Drain Lines and Drain Trap - Horizontal Drain Trap Mounting.*

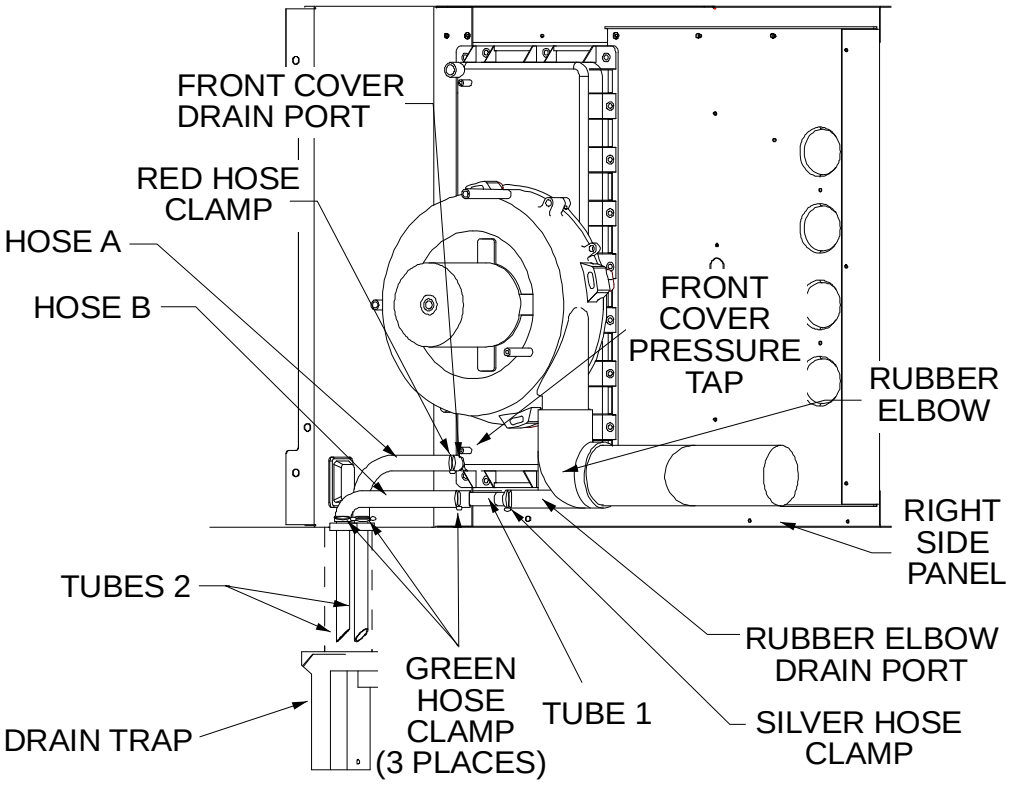


**Horizontal Connections - Right Side Down (Upflow Shown, Counterflow Similar)**

### Left Side Down

Horizontal installations with the left side panel down will require drain hoses to be connected to the left side front cover drain port and the side drain port on the rubber elbow.

1. Remove the rubber plug/cap from the front cover left (down) side drain port.
2. Relocate the front cover pressure switch hose connection from the right side (as shipped) pressure tap to the left (down) side tap. The pressure switch hose must be connected to the down side to guard against blocked drain conditions. Cut hose to appropriate length to minimize sagging. Plug right (unused) pressure tap with plug removed from left side.
3. Secure Hose A to front cover drain port with a red hose clamp. Route hose to rear left (down) side panel grommet holes. **NOTE:** For left side drainage, grommets must be relocated to left side panel.
4. Remove the rubber cap from the side drain port on the rubber elbow.
5. Secure the short end of Hose B to rubber elbow side drain port using a green hose clamp. **NOTE:** For left side drainage, route hose to far left (down) side panel grommet holes. **NOTE:** Horizontal left side connections (when using new side port drain elbow) does not require connecting a hose to the induced draft blower housing.
6. Cut 5 1/2 inches straight length from the long end of each Tube 2 and discard radius ends.
7. Insert approximately one inch of each Tube 2 through left side panel grommet hole. Secure tubes to Hose A and Hose B with a green hose clamps. **NOTE:** Tube must reach bottom of trap. Ensure hoses and tubes maintain a downward slope for proper drainage and that they are not kinked or binding.

For details concerning mounting of the drain trap, refer to *Condensate Drain Lines and Drain Trap - Horizontal Drain Trap Mounting.*

### Horizontal Drain Trap Mounting (Left or Right Side Panel)

1. Position the drain trap against side panel with drain tubes inserted into trap. Note that the trap may be orientated with the outlet facing either the furnace's top cover or base pan.
2. Secure drain trap to side panel at the dimples or crosshairs located on either side of the grommet drain holes.
3. Confirm that tubes reach bottom of drain trap and that all hoses maintain a downward slope and are not kinked or binding.
4. Attach PVC drain line to drain trap outlet with either a 90° elbow or coupling.

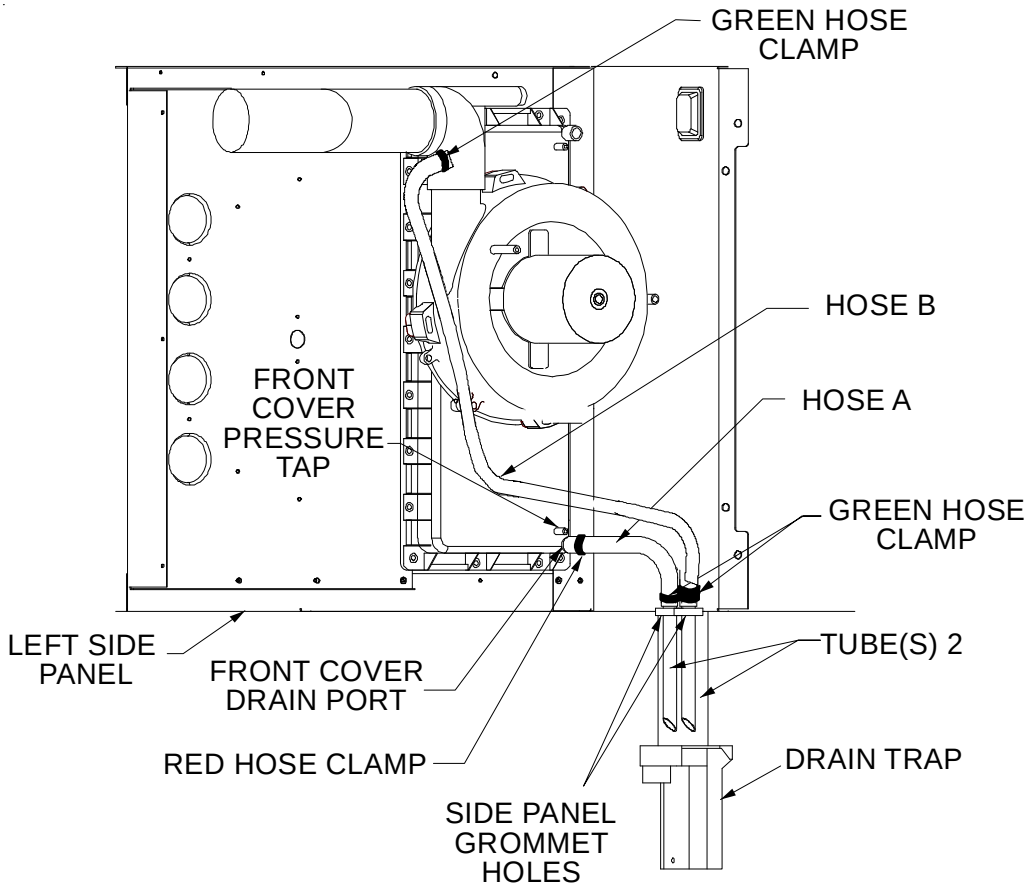


**Horizontal Connections - Left Side Down**
**(Upflow Shown, Counterflow Similar)**

## *Electrical Connections*

**WARNING**

**HIGH VOLTAGE !**

**To avoid the risk of electrical shock, wiring to the unit must be polarized and grounded.**

**WARNING**

**HIGH VOLTAGE !**

**To avoid personal injury or death due to electrical shock, disconnect electrical power before servicing or changing any electrical wiring.**

**CAUTION**

**Label all wires prior to disconnection when servicing controls. Wiring errors can cause improper and dangerous operation. Verify proper operation after servicing.**

### Wiring Harness

The wiring harness is an integral part of this furnace. Field alteration to comply with electrical codes should not be required. Wires are color coded for identification purposes. Refer to the wiring diagram for wire routings. If any of the original wire as supplied with the furnace must be replaced, it must be replaced with wiring material having a temperature rating of at least 105° C. Any replacement wiring must be a copper conductor.

### 115 Volt Line Connections

Before proceeding with electrical connections, ensure that the supply voltage, frequency, and phase correspond to that specified on the unit rating plate. Power supply to the furnace must be NEC Class 1, and must comply with all applicable codes. The furnace must be electrically grounded in accordance with local codes or, in their absence, with the latest edition of The National Electric Code, ANSI NFPA 70 and/or The Canadian Electric Code CSA C22.1.

Use a separate fused branch electrical circuit containing properly sized wire, and fuse or circuit breaker. The fuse or circuit breaker must be sized in accordance with the maximum overcurrent protection specified on the unit rating plate. An electrical disconnect must be provided at the furnace location.

Connect hot, neutral, and ground wires as shown in the wiring diagram located on the unit's blower door. For direct vent applications, the cabinet opening to the junction box must be sealed air tight using either an UL approved bushing such as Heyco Liquid Tight or by applying non-reactive UL approved sealant to bushing.

Line polarity must be observed when making field connections. Line voltage connections can be made through either the right or left side panel. The furnace is shipped configured for a right side (left side for counterflows) electrical connection with the junction box located inside the burner compartment. To make electrical connections through the opposite side of the furnace, the junction box must be relocated to the other side of the burner compartment prior to making electrical connections. To relocate the junction box, follow the steps shown below.

**NOTE:** Wire routing must not to interfere with circulator blower operation, filter removal, or routine maintenance.

### Junction Box Relocation

**WARNING**

**Edges of sheet metal holes may be sharp. Use gloves as a precaution when removing hole plugs.**

**WARNING**

**To prevent personal injury or death due to electric shock, disconnect electrical power before installing or servicing this unit.**

**WARNING**

**HIGH VOLTAGE !**

**To avoid the risk of injury, electrical shock or death, the furnace must be electrically grounded in accordance with local codes or in their absence, with the latest edition of the National Electric Code.**

Line voltage connections can be made through either the right or left side panel. The furnace is shipped configured for a right side electrical connection. To make electrical connections through the opposite side of the furnace, the junction box must be relocated to the left side prior to making electrical connections. To relocate the junction box, perform the following steps.

1. Remove the burner compartment door.
2. Remove and save the two screws securing the junction box to the side panel.
3. Relocate junction box and associated plugs and grommets to opposite side panel. Secure with screws removed in step 2.

**WARNING**

**To avoid the risk of injury, electrical shock or death, the furnace must be electrically grounded in accordance with local codes or, in their absence, with the latest edition of the national Electrical Code.**

To ensure proper unit grounding, the ground wire should run from the furnace ground screw located inside the furnace junction box all the way back to the electrical panel. **NOTE:** Do not use gas piping as an electrical ground. To confirm proper unit grounding, turn off the electrical power and perform the following check.

1. Measure resistance between the neutral (white) connection and one of the burners.
2. Resistance should measure 10 ohms or less.

This furnace is equipped with a blower door interlock switch which interrupts unit voltage when the blower door is opened for servicing. Do not defeat this switch.

## 24 Volt Thermostat Wiring

**IMPORTANT NOTE**

**Wire routing must not interfere with circulator blower operation, filter removal or routine maintenance.**
**A removable plug connector is provided with the control to make thermostat wire connections. This plug may be removed, wire connections made to the plug, and replaced. It is STRONGLY recommended that you do not connect multiple wires into a single terminal. Wire nuts are recommended to ensure one 18 AWG wire is used for each terminal. Failure to do so may result in intermittent operation.**

As a two-stage non-communicating furnace, the furnace integrated control module provides terminals for both "W1" and "W2", and "Y1" and "Y2" thermostat connections. This allows the furnace to support the following system applications: 'Two-Stage Heating Only', 'Two-Stage Heating with Single Stage Cooling', and 'Two-Stage Heating with Two-Stage Cooling'. Refer to the following figures for proper connections to the integrated control module.

Low voltage connections can be made through either the right or left side panel. Thermostat wiring entrance holes are located in the blower compartment. The following figure shows connections for a "heat/cool system".

This furnace is equipped with a 40 VA transformer to facilitate use with most cooling equipment. Consult the wiring diagram, located on the blower compartment door, for further details of 115 Volt and 24 Volt wiring.

**NOTE:** For single stage cooling applications, a jumper must be located between Y1 and Y2 at the furnace control in order to achieve the desired single stage cooling airflow. Use of ramping profiles and dehumidification features require a jumper between Y1 and O and Y1 and DEHUM, respectively.

**NOTE:** Thermostat "R" required if outdoor unit is equipped with a Comfort Alert™ module or if the out door unit is a part of the ComfortNet™™ family of equipment AND is wired as a non-communicating system.

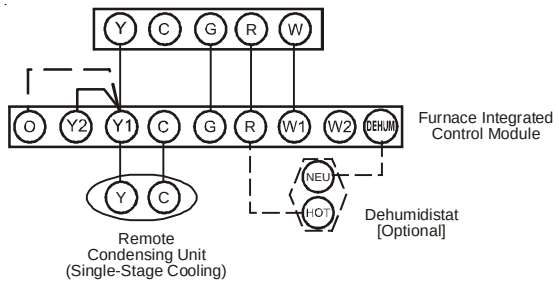


**NOTE:** To apply a single-stage Heating Thermostat, the thermostat selector switch on the Integrated Control Module *must* be set on single-stage.

***Thermostat - Single -Stage Heating with Single-Stage Cooling***

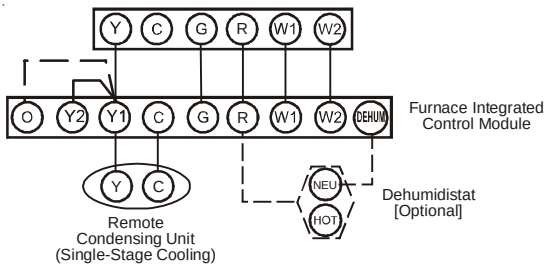


***Thermostat - Two-Stage Heating with Single-Stage Cooling***

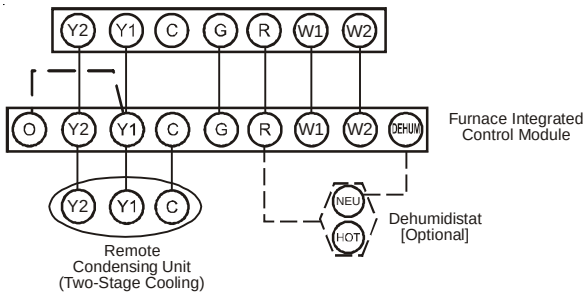


***Thermostat - Two-Stage Heating with Two-Stage Cooling***

**Thermostat Wiring Diagrams**

## Single-Stage Heating Thermostat Application

A single-stage thermostat with only one heating stage may be used to control this furnace. The application of a single-stage thermostat offers a *timed* transition from low to high fire. The furnace will run on low stage for a fixed period of time before stepping up to high stage to satisfy the thermostat's call for heat. The delay period prior to stepping up can be set at either a fixed 5 minute time delay or a load based variable time between 1 and 12 minutes (AUTO mode). If the AUTO mode is selected, the control averages the cycle times of the previous three cycles and uses the average to determine the time to transition from low stage to high stage.

To use a single-stage thermostat, turn off power to the furnace, move the thermostat selection DIP switch to the OFF position. Set the desired transition time by setting the transition delay DIP switch to the desired ON/OFF position. Turn power back on. Refer to the following figure.

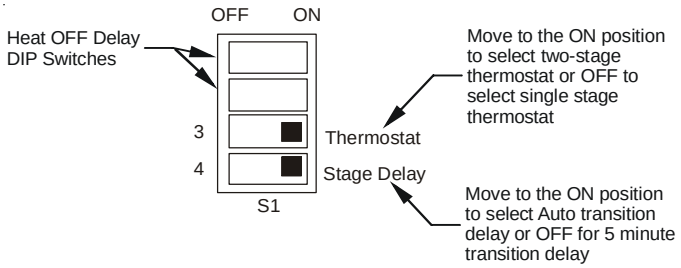


## 24 Volt Dehumidistat Wiring

The optional usage of a dehumidistat allows the furnace's circulator blower to operate at a slightly lower speed (85% of desired speed) during a combined thermostat call for cooling and dehumidistat call for dehumidification. This can be done through an independent dehumidistat or through a thermostat's DEHUM terminal (if available). This lower blower speed enhances dehumidification of the conditioned air as it passes through the AC coil. For proper function, a dehumidistat applied to this furnace must operate on 24 VAC and utilize a switch which *opens on humidity rise.* Refer to the "Thermostat Wiring Diagrams" figure for additional wiring details.

To install/connect a dehumidistat:

1. Turn OFF power to furnace.
2. To enable the dehumidify function on the integrated control module, set the dehumidification ENABLE dip switch from OFF to ON.
3. Secure the dehumidistat neutral wire (typically the white lead) to the terminal marked "DEHUM" on the furnace integrated control module.
4. Secure the dehumidistat hot wire (typically the black lead) to the terminal marked "R" on the furnace integrated control module.
5. Secure the dehumidistat ground wire (typically the green lead) to the ground screw on the furnace junction box. NOTE: Ground wire may not be present on all dehumidistats.
6. Turn ON power to furnace.

Once the switch is set, the dehumidify function is enabled during a *combination* call for cooling (T-Stat) and dehumidification (DEHUM-Stat).

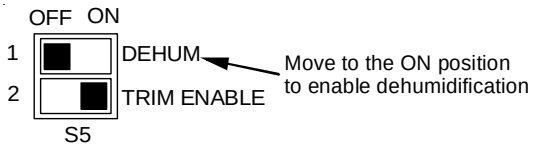


## Fossil Fuel Applications

This furnace can be used in conjunction with a heat pump in a fossil fuel application. A fossil fuel application refers to a combined gas furnace and heat pump installation which uses an outdoor temperature sensor to determine the most cost efficient means of heating (heat pump or gas furnace).

A heat pump thermostat with *three stages of heat* is required to properly use a two-stage furnace in conjunction with a heat pump. Refer to the fossil fuel kit installation instructions for additional thermostat requirements.

Strictly follow the wiring guidelines in the fossil fuel kit installation instructions. All furnace connections must be made to the furnace two-stage integrated control module and the "FURNACE" terminal strip on the fossil fuel control board.

## 115 Volt Line Connection of Accessories (Humidifier and Electronic Air Cleaner)

**WARNING**

**HIGH VOLTAGE !**

**To avoid personal injury or death due to electrical shock, disconnect electrical power before servicing or changing any electrical wiring.**

The furnace integrated control module is equipped with line voltage accessory terminals for controlling power to an optional field-supplied humidifier and/or electronic air cleaner.

The accessory load specifications are as follows:

| | |
|---|---|
| Humidifier | 1.0 Amp maximum at 120 VAC |
| Electronic Air Cleaner | 1.0 Amp maximum at 120 VAC |

Turn OFF power to the furnace before installing any accessories. Follow the humidifier or air cleaner manufacturers' instructions for locating, mounting, grounding, and controlling these accessories. Accessory wiring connections are to be made through the 1/4" quick connect terminals provided on the furnace integrated control module. The humidifier and electronic air cleaner hot terminals are identified as HUM and EAC. The humidifier and electronic air cleaner neutral terminals are identified as NEUTRAL. All field wiring must conform to applicable codes. Connections should be made as shown.

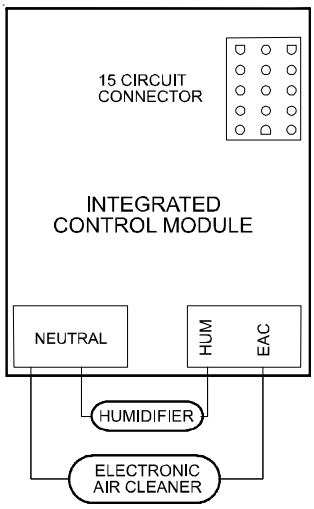


OPTIONAL ACCESSORIES

**Accessories Wiring**

If it is necessary for the installer to supply additional line voltage wiring to the inside of the furnace, the wiring must conform to all local codes, and have a minimum temperature rating of 105°C. All line voltage wire splices must be made inside the furnace junction box.

The integrated control module humidifier terminals (HUM) are energized with 115 volts whenever the induced draft blower is energized. The integrated control module electronic air cleaner terminals (EAC) are energized with 115 volts whenever the circulator blower is energized.

In addition, the control is equipped with a dedicated humidification relay which is available through ¼ inch terminals HUM-IN and HUM-OUT. Similar to the HUM terminal, when utilizing legacy connections, this relay will be closed during normal heating operation (115VAC must be present on the HUM-IN terminal to take advantage of HUM-OUT). However, the control can provide additional humidification features when wired to a communicating thermostat (1, 2, R, C connections). If the communicating thermostat is not capable of providing a humidification call, this dedicated relay will function exactly as mentioned above with a legacy setup. If the communicating thermostat is capable of providing a humidification call the user is now provided with 3 modes of operations which can be selected within the thermostat user menu.

1. ON: Humidifier is turned on with a heat demand.
2. OFF: Humidifier remains off (relay never closes).
3. IND: Humidifier will cycle with humidification demand, independent of heat demand. This mode allows the user to select one of 4 fan speeds (25, 50, 75, and 100%).

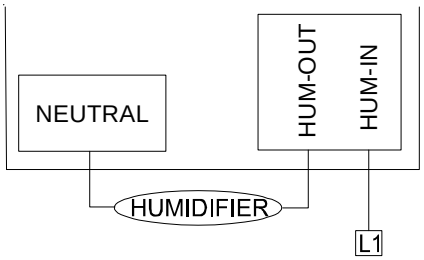


## 24 Volt Humidifier

A 5" long brown wire in the wire harness at the low fire pressure switch provides 24 VAC humidifier control. This wire is powered any time the pressure switch is closed. To connect 24 VAC HUM, connect the 24 VAC line of the humidifier to the 5" brown wire. The connection can be made by either stripping the wire and using a wire nut or by using a field supplied quick connect terminal. The wiring must conform to all local and national codes. Connect the COM side of the humidifier to the C terminal on the furnace control board (or to the COM side of the 24 VAC transformer). Do not connect 115V humidifier to these terminals.

## Auxiliary Alarm Switch:

The control is equipped with a 24VAC Auxiliary Alarm Input (12 inch purple / white wire attached to pin 6 of 15 pin connector) which can be utilized with communicating mode setups (typically used for condensate switch wiring but could be used with compatible $C0_2$ sensors or Fire Alarms).

***Legacy mode use***

In a legacy system (Non-communicating), this auxiliary alarm input is not operational. Any auxiliary alarm switch must be used to interrupt Y1 signal either to IFC or to UC.

***Communication mode use***

This feature can be activated or deactivated through the thermostat user menus. By default, an AUX switch is normally closed and opens when the water level in the evaporator coil base pan reaches a particular level. The control will respond by turning off the outdoor compressor and display the proper fault codes. If the AUX switch is detected closed for 30 seconds, normal operation resumes and error messages are no longer displayed. Installer must wire control voltage (24VAC) to AUX switch to ensure the Auxiliary Alarm Input has 24VAC during normal operation.

## *Gas Supply and Piping*

The furnace rating plate includes the approved furnace gas input rating and gas types. The furnace must be equipped to operate on the type of gas applied. This includes any conversion kits required for alternate fuels and/or high altitude.

**CAUTION**

**To prevent unreliable operation or equipment damage, the inlet gas supply pressure must be as specified on the unit rating plate with all other household gas fired appliances operating.**

Inlet gas supply pressures must be maintained within the ranges specified in the following table. The supply pressure must be constant and available with all other household gas fired appliances operating. The minimum gas supply pressure must be maintained to prevent unreliable ignition. The maximum must not be exceeded to prevent unit overfiring.

| INLET GAS SUPPLY PRESSURE | | |
|---|---|---|
| Natural Gas | Minimum: 4.5" w.c. | Maximum: 10.0" w.c. |
| Propane Gas | Minimum: 11.0" w.c. | Maximum: 13.0" w.c. |

### High Altitude Derate

When this furnace is installed at high altitude, the appropriate High Altitude orifice kit must be applied. This is required due to the natural reduction in the density of both the gas fuel and combustion air as altitude increases. The kit will provide the proper design certified input rate within the specified altitude range.

High altitude kits are purchased according to the installation altitude and usage of either natural or propane gas. Consult the furnace Specification Sheet for appropriate kits.

Do **not** derate the furnace by adjusting the manifold pressure to a lower pressure than specified on the furnace rating plate. The combination of the lower air density and a lower manifold pressure will prohibit the burner orifice from drawing the proper amount of air into the burner. This may cause incomplete combustion, flashback, and possible yellow tipping.

In some areas the gas supplier may artificially derate the gas in an effort to compensate for the effects of altitude. If the gas is artificially derated, the appropriate orifice size must be determined based upon the BTU/ft$^3$ content of the derated gas and the altitude. Refer to the National Fuel Gas Code, NFPA 54/ANSI Z223.1, and information provided by the gas supplier to determine the proper orifice size.

A different pressure switch may be required at high altitude regardless of the BTU/ft$^3$ content of the fuel used. Consult the furnace Specification Sheet for pressure switch.

### Propane Gas Conversion

**WARNING**

**Possible property damage, personal injury or death may occur if the correct conversion kits are not installed. The appropriate kits must be applied to ensure safe and proper furnace operation. All conversions must be performed by a qualified installer or service agency.**

This unit is configured for natural gas. The appropriate manufacturer's propane gas conversion kit, must be applied for propane gas installations. Refer to the *Propane Gas and/or High Altitude Installations* for details.

Consult the furnace Specification Sheet for a listing of appropriate kits. The indicated kits must be used to insure safe and proper furnace operation. All conversions must be performed by a qualified installer, or service agency.

### Gas Valve

This unit is equipped with a 24 volt gas valve controlled during furnace operation by the integrated control module. As shipped, the valve is configured for natural gas. The valve is field convertible for use with propane gas by replacing the regulator spring with a propane gas spring from an appropriate manufacturer's propane gas conversion kit. Taps for measuring the gas supply pressure and manifold pressure are provided on the valve.

The gas valve has a manual ON/OFF control located on the valve itself. This control may be set only to the "ON" or "OFF" position. Refer to the lighting instructions label or *Startup Procedure & Adjustment* for use of this control during start up and shut down periods.

### Gas Piping Connections

**WARNING**

**To avoid possible unsatisfactory operation of equipment damage due to underfiring or equipment, use the proper size of natural/propane gas piping needed when running pipe from the meter/tank to the furnace.**

When sizing a trunk line, be sure to include all appliances which will operate simultaneously when sizing a trunk line.

The gas piping supplying the furnace must be properly sized based on the gas flow required, specific gravity of the gas, and length of the run. The gas line installation must comply with local codes, or in their absence, with the latest edition of the National Fuel Gas Code, NFPA 54/ANSI Z223.1.

**Natural Gas Capacity of Pipe**
**In Cubic Feet of Gas Per Hour (CFH)**

| Length of Pipe in Feet | Nominal Black Pipe Size | | | | |
|---|---|---|---|---|---|
| | 1/2" | 3/4" | 1" | 1 1/4" | 1 1/2" |
| 10 | 132 | 278 | 520 | 1050 | 1600 |
| 20 | 92 | 190 | 350 | 730 | 1100 |
| 30 | 73 | 152 | 285 | 590 | 980 |
| 40 | 63 | 130 | 245 | 500 | 760 |
| 50 | 56 | 115 | 215 | 440 | 670 |
| 60 | 50 | 105 | 195 | 400 | 610 |
| 70 | 46 | 96 | 180 | 370 | 560 |
| 80 | 43 | 90 | 170 | 350 | 530 |
| 90 | 40 | 84 | 160 | 320 | 490 |
| 100 | 38 | 79 | 150 | 305 | 460 |

(Pressure 0.5 psig or less and pressure drop of 0.3" W.C.; Based on 0.60 Specific Gravity Gas)

$$\text{CFH} = \frac{\text{BTUH Furnace Input}}{\text{Heating Value of Gas (BTU/Cubic Foot)}}$$

To connect the furnace to the building's gas piping, the installer must supply a ground joint union, drip leg, manual shutoff valve, and line and fittings to connect to gas valve. In some cases, the installer may also need to supply a transition piece from 1/2" pipe to a larger pipe size.

The following stipulations apply when connecting gas piping. Refer to *Gas Piping Connections* figure for typical gas line connections to the furnace.

- Gas piping must be supported external to the furnace cabinet so that the weight of the gas line does not distort the burner rack, manifold or gas valve.
- Use black iron or steel pipe and fittings for building piping. Where possible, use new pipe that is properly chamfered, reamed, and free of burrs and chips. If old pipe is used, be sure it is clean and free of rust, scale, burrs, chips, and old pipe joint compound.

- Use pipe joint compound on male threads ONLY. Always use pipe joint compound (pipe dope) that is APPROVED FOR ALL GASSES. DO NOT apply compound to the first two threads.
- Use ground joint unions.
- Install a drip leg to trap dirt and moisture before it can enter the gas valve. The drip leg must be a minimum of three inches long.
- Install a 1/8" NPT pipe plug fitting, accessible for test gage connection, immediately upstream of the gas supply connection to the furnace.
- Always use a back-up wrench when making the connection to the gas valve to keep it from turning. The orientation of the gas valve on the manifold must be maintained as shipped from the factory. Maximum torque for the gas valve connection is 375 in-lbs; excessive over-tightening may damage the gas valve.
- Install a manual shutoff valve between the gas meter and unit within six feet of the unit. If a union is installed, the union must be downstream of the manual shutoff valve, between the shutoff valve and the furnace.
- Tighten all joints securely.
- Connect the furnace to the building piping by one of the following methods:
  - Rigid metallic pipe and fittings.
  - Semi-rigid metallic tubing and metallic fittings. Aluminum alloy tubing must not be used in exterior locations. In order to seal the grommet cabinet penetration, rigid pipe must be used to reach the outside of the cabinet. A semi-rigid connector to the gas piping may be used from there.
- Use listed gas appliance connectors in accordance with their instructions. Connectors must be fully in the same room as the furnace.
- Protect connectors and semirigid tubing against physical and thermal damage when installed. Ensure aluminum-alloy tubing and connectors are coated to protect against external corrosion when in contact with masonry, plaster, or insulation, or subjected to repeated wetting by liquids such as water (except rain water), detergents, or sewage.

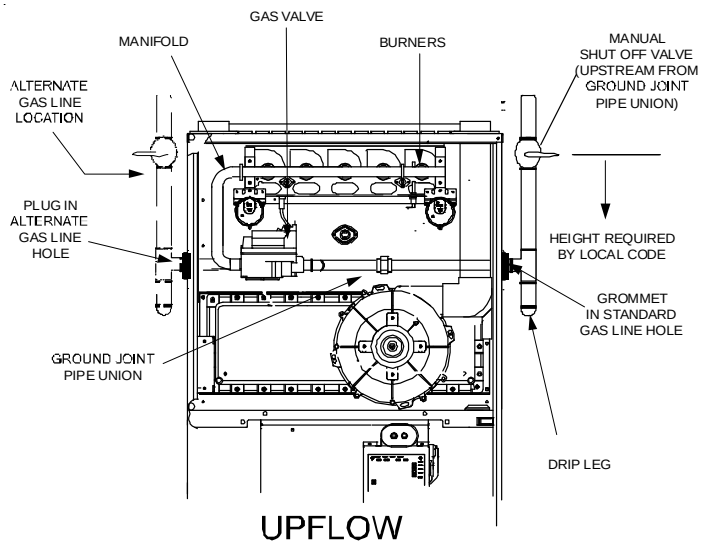


UPFLOW

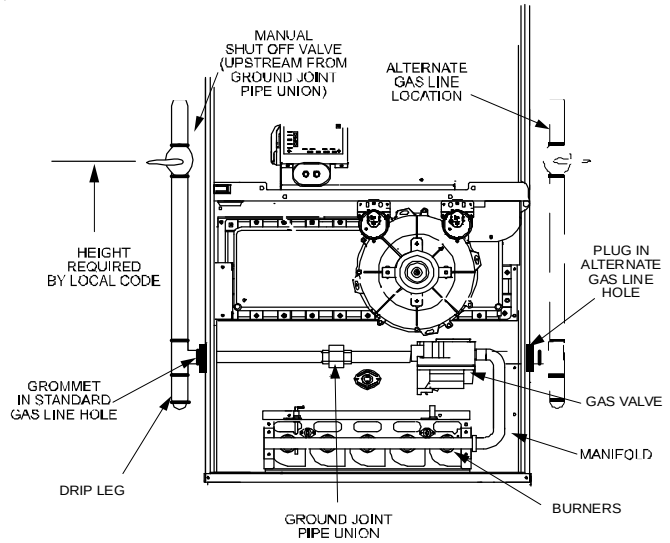


COUNTERFLOW

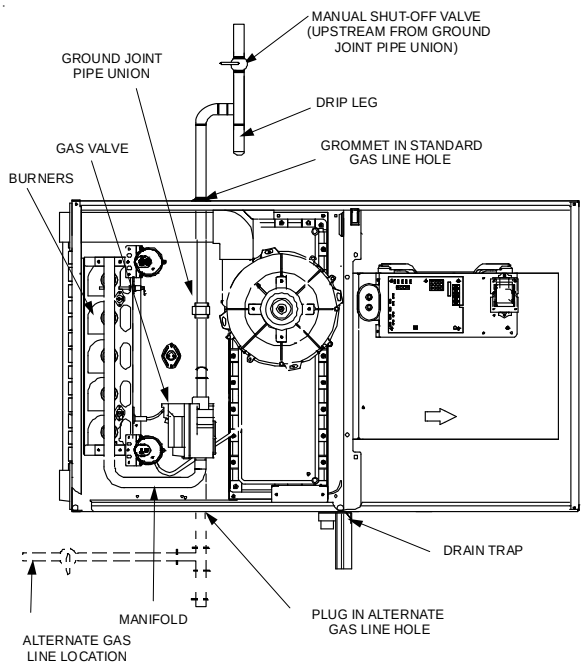


HORIZONTAL [UPFLOW MODEL]

NOTES: 1. WHEN GAS LINE IS IN THE ALTERNATE LOCATION, SWAP THE POSITION OF THE PLUG AND GROMMET.

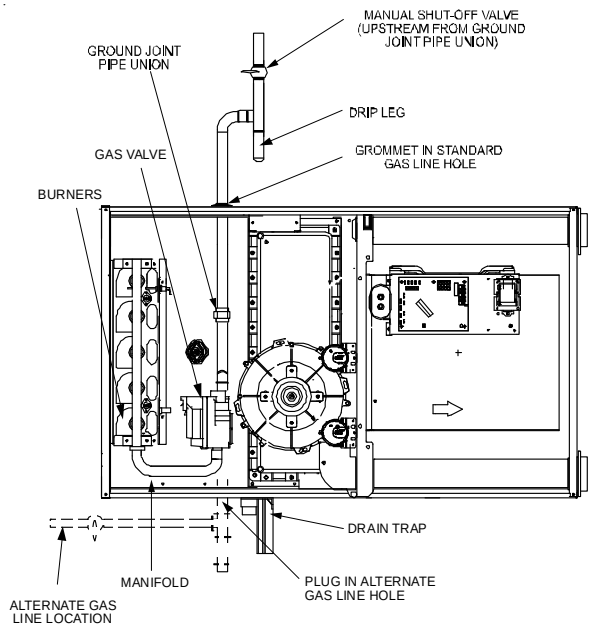


HORIZONTAL[COUNTERFLOW]

2. DRIP LEG MAY TERMINATE WITH A 1/2" X 1/8" PIPE PLUG TO ACCOMMODATE LINE GAS PRESSURE MEASUREMENT.

**Gas Piping Connections**

### Direct/Standard Inlet Piping

**WARNING**

**Edges of sheet metal holes may be sharp. Use gloves as a precaution when removing hole plugs.**

When gas piping enters *directly* to the gas valve through the *standard* inlet hole, the installer must supply straight pipe with a ground joint union to reach the exterior of the furnace. The rigid pipe must be long enough to reach the outside of the cabinet to seal the grommet cabinet penetration. A semi-rigid connector to the gas piping can be used outside the cabinet per local codes.

### Indirect/Alternate Inlet Piping

When gas piping enters *indirectly* to the gas valve through the *alternate* gas inlet hole the following fittings (starting from the gas valve) to reach the outside of the cabinet must be supplied:

- Coupling.
- 90 degree elbow.
- 2 inch close nipple.
- 90 degree elbow.
- Straight pipe, with a ground joint union, to reach the exterior of the furnace. The rigid pipe must be long enough to reach the outside of the cabinet so as to seal the grommet cabinet penetration. A semi-rigid connector to the gas piping can be used outside the cabinet per local codes.

### Gas Piping Checks

Before placing unit in operation, leak test the unit and gas connections.

**WARNING**

**To avoid the possibility of explosion or fire, never use a match or open flame to test for leaks.**

Check for leaks using an approved chloride-free soap and water solution, an electronic combustible gas detector, or other approved testing methods.

**NOTE:** Never exceed specified pressures for testing. Higher pressure may damage the gas valve and cause subsequent overfiring, resulting in heat exchanger failure.

Disconnect this unit and shutoff valve from the gas supply piping system before pressure testing the supply piping system with pressures in excess of 1/2 psig (3.48 kPa).

Isolate this unit from the gas supply piping system by closing its external manual gas shutoff valve before pressure testing supply piping system with test pressures equal to or less than 1/2 psig (3.48 kPA).

## Propane Gas Tanks and Piping

**WARNING**

**If the gas furnace is installed in a basement, an excavated area or confined space, it is strongly recommended to contact a propane supplier to install a gas detecting warning device in case of a gas leak.**

- **Since propane gas is heavier than air, any leaking gas can settle in any low areas or confined spaces.**
- **Propane gas odorant may fade, making the gas undetectable except with a warning device.**

A gas detecting warning system is the only reliable way to detect a propane gas leak. Rust can reduce the level of odorant in propane gas. Do not rely on your sense of smell. Contact a local propane gas supplier about installing a gas detecting warning system. If the presence of gas is suspected, follow the instructions listed in the *Safety Precautions* section of this manual.

All propane gas equipment must conform to the safety standards of the National Board of Fire Underwriters, NBFU Manual 58.

For satisfactory operation, propane gas pressure must be 11 inch WC at the furnace manifold with all gas appliances in operation. Maintaining proper gas pressure depends on three main factors:

1. Vaporization rate, depending on temperature of the liquid, and "wetted surface" area of the container or containers.
2. Proper pressure regulation. (Two-stage regulation is recommended for both cost and efficiency).
3. Pressure drop in lines between regulators, and between second stage regulator and the appliance. Pipe size will depend on length of pipe run and total load of all appliances.

Complete information regarding tank sizing for vaporization, recommended regulator settings, and pipe sizing is available from most regulator manufacturers and propane gas suppliers.

Since propane gas will quickly dissolve white lead and most standard commercial compounds, special pipe dope must be used. Always use a pipe thread sealant approved for all gases.

Refer to the following illustration for typical propane gas installations and piping.

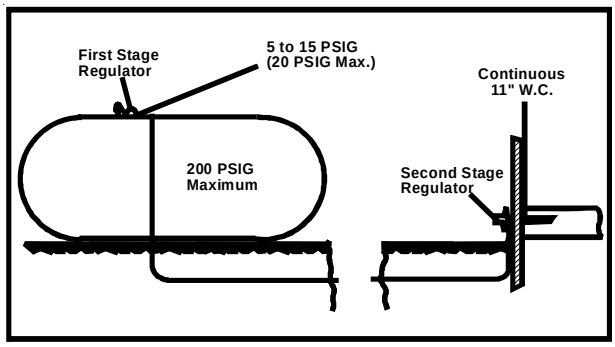


**Propane Gas Installation (Typ.)**

**Sizing Between First and Second Stage Regulator***

Maximum Propane Capacities listed are based on 2 psig pressure drop at 10 psig setting. Capacities in 1,000 BTU/hour.

| Pipe or Tubing Length Feet | Tubing Size, O.D. Type L | | | | | Nominal Pipe Size Schedule 40 | |
|---|---|---|---|---|---|---|---|
| | 3/8" | 1/2" | 5/8" | 3/4" | 7/8" | 1/2" | 3/4" |
| 10 | 730 | 1,700 | 3,200 | 5,300 | 8,300 | 3,200 | 7,500 |
| 20 | 500 | 1,100 | 220 | 3,700 | 5,800 | 2,200 | 4,200 |
| 30 | 400 | 920 | 2,000 | 2,900 | 4,700 | 1,800 | 4,000 |
| 40 | 370 | 850 | 1,700 | 2,700 | 4,100 | 1,600 | 3,700 |
| 50 | 330 | 770 | 1,500 | 2,400 | 3,700 | 1,500 | 3,400 |
| 60 | 300 | 700 | 1,300 | 2,200 | 3,300 | 1,300 | 3,100 |
| 80 | 260 | 610 | 1,200 | 1,900 | 2,900 | 1,200 | 2,600 |
| 100 | 220 | 540 | 1,000 | 1,700 | 2,600 | 1,000 | 2,300 |
| 125 | 200 | 490 | 900 | 1,400 | 2,300 | 900 | 2,100 |
| 150 | 190 | 430 | 830 | 1,300 | 2,100 | 830 | 1,900 |
| 175 | 170 | 400 | 780 | 1,200 | 1,900 | 770 | 1,700 |
| 200 | 160 | 380 | 730 | 1,100 | 1,800 | 720 | 1,500 |

To convert to capacities at 15 psig settings - multiply by 1.130
To convert to capacities at 5 psig settings - multiply by 0.879

**Propane Gas Piping Chart I**

**Sizing Between Second or Second Stage Regulator & Appliance***

Maximum Propane Capacities listed are based on 1/2" W.C. pressure drop at 11" W.C. setting. Capacities in 1,000 BTU/hour.

| Pipe or Tubing Length Feet | Tubing Size, O.D. Type L | | | | | Nominal Pipe Size Schedule 40 | | | | |
|---|---|---|---|---|---|---|---|---|---|---|
| | 3/8" | 1/2" | 5/8" | 3/4" | 7/8" | 1/2" | 3/4" | 1" | 1-1/4" | 1-1/2" |
| 10 | 39 | 92 | 199 | 329 | 501 | 275 | 567 | 1,071 | 2,205 | 3,307 |
| 20 | 26 | 62 | 131 | 216 | 346 | 189 | 393 | 732 | 1,496 | 2,299 |
| 30 | 21 | 50 | 107 | 181 | 277 | 152 | 315 | 590 | 1,212 | 1,858 |
| 40 | 19 | 41 | 90 | 145 | 233 | 129 | 267 | 504 | 1,039 | 1,559 |
| 50 | 18 | 37 | 79 | 131 | 198 | 114 | 237 | 448 | 913 | 1,417 |
| 60 | 16 | 35 | 72 | 121 | 187 | 103 | 217 | 409 | 834 | 1,275 |
| 80 | 13 | 29 | 62 | 104 | 155 | 89 | 185 | 346 | 724 | 1,066 |
| 100 | 11 | 26 | 55 | 90 | 138 | 78 | 162 | 307 | 630 | 976 |
| 125 | 10 | 24 | 48 | 81 | 122 | 69 | 146 | 275 | 567 | 866 |
| 150 | 9 | 21 | 43 | 72 | 109 | 63 | 132 | 252 | 511 | 787 |
| 200 | 8 | 19 | 39 | 66 | 100 | 54 | 112 | 209 | 439 | 665 |
| 250 | 8 | 17 | 36 | 60 | 93 | 48 | 100 | 185 | 390 | 590 |

*Data in accordance with NFPA pamphlet No. 54

**Propane Gas Piping Chart II**

# *Circulating Air & Filters*

## Duct Work - Air Flow

**WARNING**

**Never allow the products of combustion, including carbon monoxide, to enter the return duct work or circulation air supply.**

Duct systems and register sizes must be properly designed for the CFM and external static pressure rating of the furnace. Design the ductwork in accordance with the recommended methods of "Air Conditioning Contractors of America" Manual D.

Install the duct system in accordance with Standards of the National Board of Fire Underwriters for the Installation of Air Conditioning, Warm Air Heating and Ventilating Systems. Pamphlets No. 90A and 90B.

A closed return duct system must be used, with the return duct connected to the furnace. **NOTE:** Ductwork must never be attached to the back of the furnace. For upflow installations requiring 1800 CFM or more, use either two side returns or bottom return or a combination of side /bottom. Flexible joints may be used for supply and return connections to reduce noise transmission. To prevent the blower from interfering with combustion air or draft when a central return is used, a connecting duct must be installed between the unit and the utility room wall. Never use a room, closet, or alcove as a return air chamber.

## Checking Duct Static

Refer to your furnace rating plate for the maximum ESP (external duct static) rating.

Total external static refers to everything external to the furnace cabinet. Cooling coils, filters, ducts, grilles, registers must all be considered when reading your total external static pressure. The supply duct pressure must be read between the furnace and the cooling coil. This reading is usually taken by removing the “A” shaped block off plate from the end on the coil; drilling a test hole in it and reinstalling the block off plate. Take a duct static reading at the test hole. Tape up the test hole after your test is complete. The negative pressure must be read between the filter and the furnace blower.

Too much external static pressure will result in insufficient air that can cause excessive temperature rise. This can cause limit switch tripping and heat exchanger failure.

To determine total external duct static pressure, proceed as follows;

1. With clean filters in the furnace, use a draft gauge (inclined manometer) to measure the static pressure of the return duct at the inlet of the furnace. (Negative Pressure)
2. Measure the static pressure of the supply duct. (Positive Pressure)
3. The difference between the two numbers is .4” w.c.

Example:

static reading from return duct = -.1" w.c.

static reading from supply duct = .3" w.c.

total external static pressure on this system = .4" w.c.

**NOTE:** Both readings may be taken simultaneously and read directly on the manometer if so desired. If an air conditioner coil or Electronic Air Cleaner is used in conjunction with the furnace, the readings must also include theses components, as shown in the following drawing.

4. Consult proper tables for the quantity of air.

If the total external static pressure exceeds the maximum listed on the furnace rating plate, check for closed dampers, registers, undersized and/or oversized poorly laid out duct work.

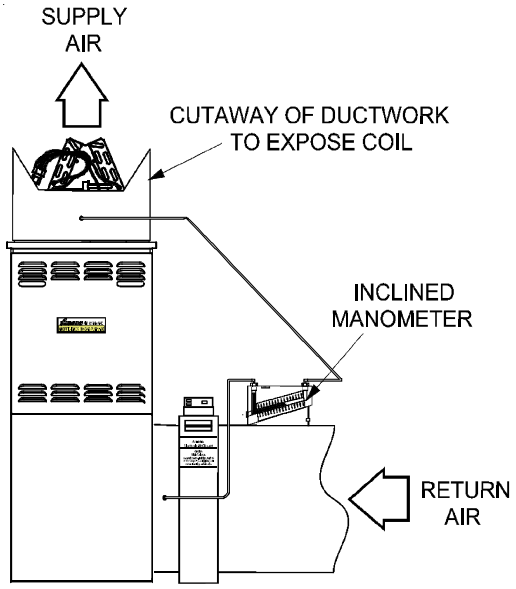


**Checking Static Pressure (80% Furnace Shown, 90% Similar)**

## Bottom Return Air Opening [Upflow Models]

The bottom return air opening on upflow models utilizes a “lance and cut” method to remove sheet metal from the duct opening in the base pan. To remove, simply press out the lanced sections by hand to expose the metal strips retaining the sheet metal over the duct opening. Using tin snips, cut the metal strips and remove the sheet metal covering the duct opening. In the corners of the opening, cut the sheet metal along the scribe lines to free the duct flanges. Using the scribe line along the duct flange as a guide, unfold the duct flanges around the perimeter of the opening using a pair of seamer pliers or seamer tongs. **NOTE:** Airflow area will be reduced by approximately 18% if duct flanges are not unfolded. This could cause performance issues and noise issues.

**WARNING**

**Edges of sheet metal holes may be sharp. Use gloves as a precaution when removing sheet metal from return air openings.**

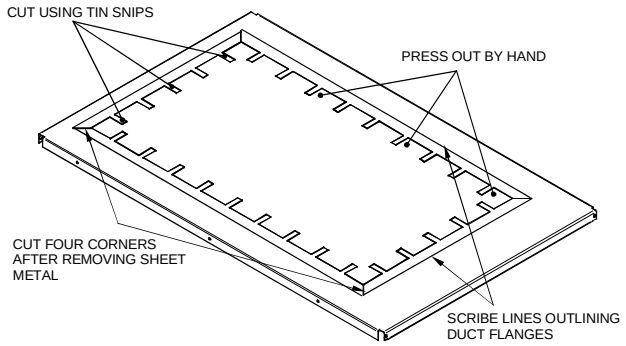


**Duct Flange Cut Outs**

When the furnace is used in connection with a cooling unit, the furnace should be installed in parallel with or on the upstream side of the cooling unit to avoid condensation in the heating element. With a parallel flow arrangement, the dampers or other means used to control the flow of air must be adequate to prevent chilled air from entering the furnace and, if manually operated, must be equipped with means to prevent operation of either unit unless the damper is in the full heat or cool position.

When the furnace is installed without a cooling coil, it is recommended that a removable access panel be provided in the outlet air duct. This opening shall be accessible when the furnace is installed and shall be of such a size that the heat exchanger can be viewed for visual light inspection or such that a sampling probe can be inserted into the airstream. The access panel must be made to prevent air leaks when the furnace is in operation.

When the furnace is heating, the temperature of the return air entering the furnace must be between 55°F and 100°F.

## Filters - Read This Section Before Installing The Return Air Ductwork

Filters must be used with this furnace. Discuss filter maintenance with the building owner. Filters do not ship with this furnace, but must be provided, sized and installed externally by the installer. Filters must comply with UL900 or CAN/ULCS111 standards. If the furnace is installed without filters, the warranty will be voided.

On upflow units, guide dimples locate the side return cutout locations. Use a straight edge to scribe lines connecting the dimples. Cut out the opening on these lines. **NOTE:** An undersized opening will cause reduced airflow.

Refer to Minimum Filter Area tables to determine filter area requirements.

| | | UPFLOW COOLING AIRFLOW REQUIREMENT (CFM) | | | | | | | |
|---|---|---|---|---|---|---|---|---|---|
| | | 600 | 800 | 1000 | 1200 | 1400 | 1600 | 1800 | 2000 |
| Input__Airflow | 0453__X* | 207* | 207* | 240 | 288 | --- | --- | --- | --- |
| | 0704__X* | --- | --- | 318* | 318* | 336 | 384 | --- | --- |
| | 0905__X* | --- | --- | --- | 413* | 413* | 413* | 432 | 480 |
| | 1155__X* | --- | --- | --- | 437* | 437* | 437* | 432 | 480 |

| | | COUNTERFLOW COOLING AIRFLOW REQUIREMENT (CFM) | | | | | | | |
|---|---|---|---|---|---|---|---|---|---|
| | | 600 | 800 | 1000 | 1200 | 1400 | 1600 | 1800 | 2000 |
| Input Airflow | 0714__X* | --- | --- | 316* | 316* | 336 | 384 | --- | --- |
| | 0915__X* | --- | --- | --- | 409* | 409* | 409* | 432 | 480 |
| | 1155__X* | --- | --- | --- | 430* | 430* | 430* | 432 | 480 |

*Minimum filter area dictated by heating airflow requirement.

**Permanent Minimum Filter Area (sq. in)**

*[Based on a 600 ft/min filter face velocity]*

| | | UPFLOW COOLING AIRFLOW REQUIREMENT (CFM) | | | | | | | |
|---|---|---|---|---|---|---|---|---|---|
| | | 600 | 800 | 1000 | 1200 | 1400 | 1600 | 1800 | 2000 |
| Input__Airflow | 0453__X* | 415* | 415* | 480 | 576 | --- | --- | --- | --- |
| | 0704__X* | --- | --- | 636* | 636* | 672 | 768 | --- | --- |
| | 0905__X* | --- | --- | --- | 826* | 826* | 826* | 864 | 960 |
| | 1155__X* | --- | --- | --- | 875* | 875* | 875* | 875* | 960 |

| | | COUNTERFLOW COOLING AIRFLOW REQUIREMENT (CFM) | | | | | | | |
|---|---|---|---|---|---|---|---|---|---|
| | | 600 | 800 | 1000 | 1200 | 1400 | 1600 | 1800 | 2000 |
| Input Airflow | 0714__X* | --- | --- | 634* | 634* | 672 | 768 | --- | --- |
| | 0915__X* | --- | --- | --- | 819* | 819* | 819* | 864 | 960 |
| | 1155__X* | --- | --- | --- | 860* | 860* | 860* | 864 | 960 |

*Minimum filter area dictated by heating airflow requirement.

**Disposable Minimum Filter area (sq. in)**

*[Based on 300 ft/min filter face velocity]*

## Upright Installations

Depending on the installation and/or customer preference, differing filter arrangements can be applied. Filters can be installed in the central return register or a side panel external filter rack kit (upflows). As an alternative a media air filter or electronic air cleaner can be used as the requested filter.

The following figure shows possible filter locations.

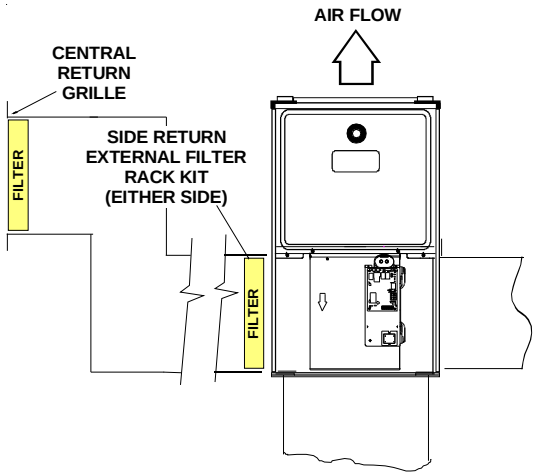


**Possible Upright Upflow**

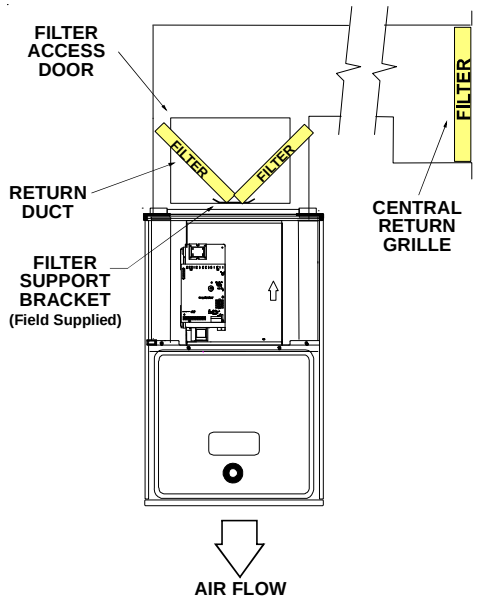


**Possible Upright Counterflow Filter Locations**

### Horizontal Installations

Filters must be installed in either the central return register or in the return air duct work.

## *Startup Procedure & Adjustment*

Furnace must have a 115 VAC power supply properly connected and grounded. Proper polarity must be maintained for correct operation. In addition to the following start-up and adjustment items, refer to further information in *Operational Checks* section.

### Heat Anticipator Setting

The heat anticipator in the room thermostat must be correctly adjusted to obtain the proper number of cycles per hour and to prevent "overshooting" of the setting. Set the heat anticipator setting to 0.7 amps. Follow the thermostat manufacturer's instructions on how to adjust the heat anticipator setting.

### Drain Trap Priming

The drain trap must be primed prior to furnace startup. To prime, fill the drain trap with water. This ensures proper furnace drainage upon startup and prohibits the possibility of flue gases escaping through the drain system.

### Furnace Operation

Purge gas lines of air prior to startup. Be sure not purge lines into an enclosed burner compartment.

Check for leaks using an approved chloride-free soap and water solution, an electronic combustible gas detector, or other approved method. Verify that all required kits (propane gas, high altitude, etc.) have been appropriately installed.

### Furnace Startup

1. Close the manual gas shutoff valve external to the furnace.
2. Turn off the electrical power to the furnace.
3. Set the room thermostat to the lowest possible setting.
4. Remove the burner compartment door.

**NOTE:** This furnace is equipped with an ignition device which automatically lights the burner. Do not try to light the burner by hand.

5. Move the furnace gas valve manual control to the OFF position.
6. Wait five minutes then smell for gas. Be sure check near the floor as some types of gas are heavier than air.
7. If you smell gas after five minutes, immediately follow the *Safety Instructions* on page 5 of this manual. If you do not smell gas after five minutes, move the furnace gas valve manual control to the ON position.
8. Replace the burner compartment door.
9. Open the manual gas shutoff valve external to the furnace.
10. Turn on the electrical power to the furnace.
11. Adjust the thermostat to a setting above room temperature.
12. After the burners are lit, set the thermostat to desired temperature.

### Furnace Shutdown

1. Set the thermostat to the lowest setting.

   The integrated control will close the gas valve and extinguish flame. Following a 15 second delay, the induced draft blower will be de-energized. After a 120, 150, 180 or 210-second delay period (field selectable delay OFF [90, 120, 150, 180] plus 30-second ramp down), the circulator blower de-energizes.
2. Remove the burner compartment door and move the furnace gas valve manual control to the OFF position.
3. Close the manual gas shutoff valve external to the furnace.
4. Replace the burner compartment door.

### Gas Supply Pressure Measurement

### Gas Pressure Test

This test is to be used for field test mode only, and it will allow gas valve pressure to be checked at 100% firing rate.

1. If both 'FAULT RECALL' and 'LEARN' push buttons are pressed for greater than 1 second, the display will blank to indicate the push buttons are pressed. Within 5 seconds, both push buttons should be released. If any push button is not released, the test mode will not activate. The display will return to normal.

2. Once the push buttons are released, the display will flash "Ft" to indicate the push buttons are released and successful entry into test mode has been achieved.

3. The control will force a high capacity demand. If a low capacity demand is already being serviced, it will be forced to high capacity.

4. The display will continue to flash "Ft" until high capacity (100%) is achieved. Once achieved, the display will show "Ft" without flashing. A 5-minute timer will be started to allow sufficient opportunity for the gas pressure to be tested.

5. If a call for heat is given or removed during the test, the system will still operate until the 5 minute test time is complete.

6. During test mode, if both push buttons are pressed for greater than 1 second, the display will blank to indicate push buttons are pressed. If both push buttons are released within 5 seconds, the test mode will terminate and the system will return to normal operation. Otherwise, the test mode will continue uninterrupted.

7. After completion of the 5-minute timer or test mode termination, whichever is earlier, the system will return to normal operation, either continuing an existing heat demand or going to the idle state.

**CAUTION**

**TO PREVENT UNRELIABLE OPERATION OR EQUIPMENT DAMAGE, THE INLET GAS SUPPLY PRESSURE MUST BE AS SPECIFIED ON THE UNIT RATING PLATE WITH ALL OTHER HOUSEHOLD GAS FIRED APPLIANCES OPERATING.**

The line pressure supplied to the gas valve must be within the range specified below. The supply pressure can be measured at the gas valve inlet pressure boss or at a hose fitting installed in the gas piping drip leg. The supply pressure must be measured with the burners operating. To measure the gas supply pressure, use the following procedure.

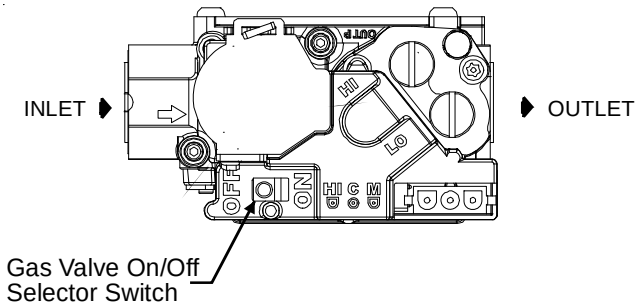


**White-Rodgers Model 36G54 (Two-Stage)**

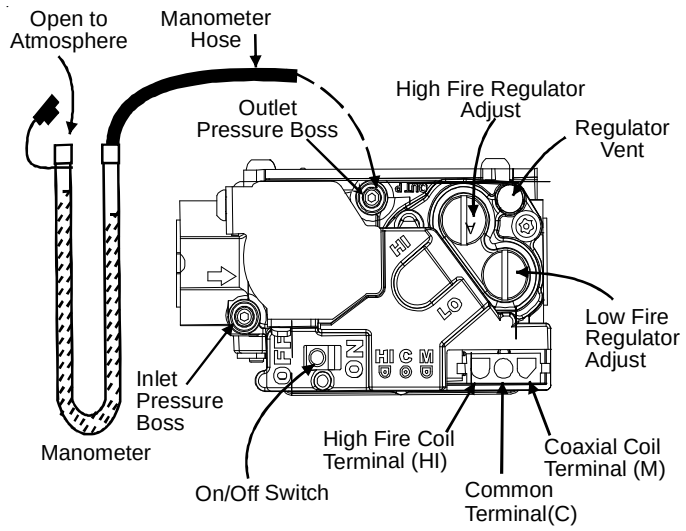


**White-Rodgers Model 36G54 Connected to Manometer**

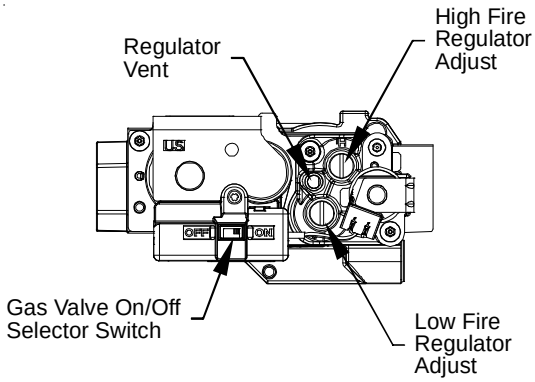


**Honeywell Model VR9205 (Two-Stage)**

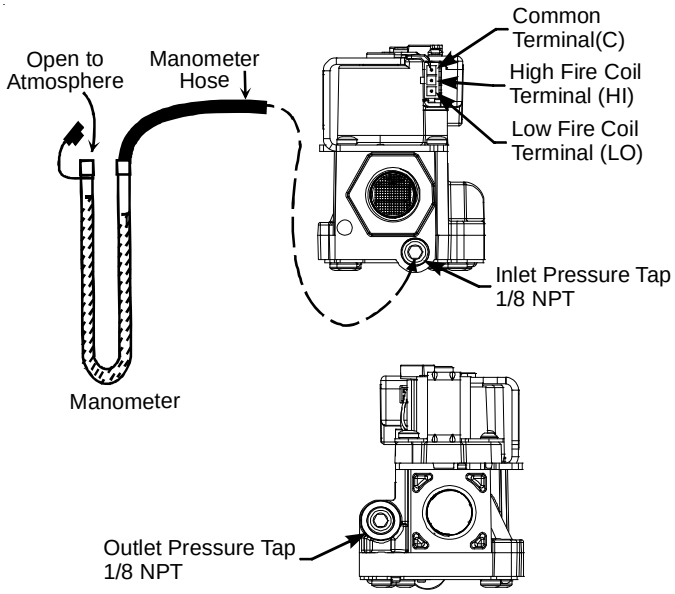


**Honeywell Model VR9205 Connected to Manometer**

1. Turn OFF gas to furnace at the manual gas shutoff valve external to the furnace.
2. Connect a calibrated water manometer (or appropriate gas pressure gauge) at either the gas valve inlet pressure boss or the gas piping drip leg. See Honeywell VR9205 gas valve figure or White-Rodgers 36G54 gas valve figure for location of inlet pressure boss.

**NOTE:** If measuring gas pressure at the drip leg or Honeywell VR9205 gas valve, a field-supplied hose barb fitting must be installed prior to making the hose connection. If using the inlet pressure boss on the White-Rodgers 36G54 gas valve, then use the 36G Valve Pressure Check Kit, Part No. 0151K00000S.

3. Turn ON the gas supply and operate the furnace and all other gas consuming appliances on the same gas supply line.
4. Measure furnace gas supply pressure with burners firing. Supply pressure must be within the range specified in the *Inlet Gas Supply Pressure* table.

| INLET GAS SUPPLY PRESSURE | | |
|---|---|---|
| Natural Gas | Minimum: 4.5" w.c. | Maximum: 10.0" w.c. |
| Propane Gas | Minimum: 11.0" w.c. | Maximum: 13.0" w.c. |

If supply pressure differs from table, make the necessary adjustments to pressure regulator, gas piping size, etc., and/or consult with local gas utility.

5. Turn OFF gas to furnace at the manual shutoff valve and disconnect manometer. Reinstall plug before turning on gas to furnace.
6. Turn OFF any unnecessary gas appliances stated in step 3.

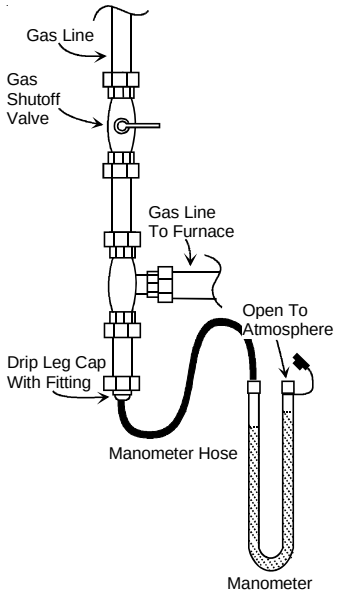


**Measuring Inlet Gas Pressure (Alt. Method)**

## Gas Manifold Pressure Measurement and Adjustment

**CAUTION**

**To prevent unreliable operation or equipment damage, the gas manifold pressure must be as specified on the unit rating plate. Only minor adjustments should be made by adjusting the gas valve pressure regulator.**

Only small variations in gas pressure should be made by adjusting the gas valve pressure regulator. The manifold pressure must be measured with the burners operating. To measure and adjust the manifold pressure, use the following procedure.

1. Turn OFF gas to furnace at the manual gas shutoff valve external to the furnace.
2. Turn off all electrical power to the system.
3. Outlet pressure tap connections:
   a. Honeywell VR9205 valve: Remove the outlet pressure boss plug. Install an 1/8" NPT hose barb fitting into the outlet pressure tap.
   b. White-Rodgers 36G54 valve: Back outlet pressure test screw (inlet/outlet pressure boss) out one turn (counterclockwise, not more than one turn).
4. Attach a hose and manometer to the outlet pressure barb fitting (Honeywell valve) or outlet pressure boss (White-Rodgers valve).
5. Turn ON the gas supply.
6. Turn on power and close thermostat "R" and "W1" contacts to provide a call for low stage heat.
7. Measure the gas manifold pressure with burners firing. Adjust manifold pressure using the *Manifold Gas Pressure* table shown below.
8. Remove regulator cover screw from the low (LO) outlet pressure regulator adjust tower and turn screw clockwise to increase pressure or counterclockwise to decrease pressure. Replace regulator cover screw.
9. Close thermostat "R" and "W2" contacts to provide a call for high stage heat.
10. Remove regulator cover screw from the high (HI) outlet pressure regulator adjust tower and turn screw clockwise to increase pressure or counterclockwise to decrease pressure. Replace regulator cover screw.
11. Turn off all electrical power and gas supply to the system.
12. Remove the manometer hose from the hose barb fitting or outlet pressure boss.
13. Replace outlet pressure tap:
    a. Honeywell VR9205 valve: Remove the 1/8" NPT hose barb fitting from the outlet pressure tap. Replace the outlet pressure boss plug and seal with a high quality thread sealer.
    b. White-Rodgers 36G54 valve: Turn outlet pressure test screw in to seal pressure port (clockwise, 7 in-lb minimum).
14. Turn on electrical power and gas supply to the system.
15. Close thermostat contacts "R" and "W1/W2" to energize the valve.

Using a leak detection solution or soap suds, check for leaks at outlet pressure boss plug (Honeywell valve) or screw (White-Rodgers valve). Bubbles forming indicate a leak. SHUT OFF GAS AND REPAIR ALL LEAKS IMMEDIATELY!

**NOTE:** For gas to gas conversion, consult your dealer for appropriate conversion.

| Manifold Gas Pressure | | | |
|---|---|---|---|
| Gas | | Range | Nominal |
| Natural | Low Stage | 1.6 - 2.2" w.c. | 1.9" w.c. |
| | High Stage | 3.2 - 3.8" w.c. | 3.5" w.c. |
| Propane | Low Stage | 5.7 - 6.3" w.c. | 6.0" w.c. |
| | High Stage | 9.7 - 10.3" w.c. | 10.0" w.c. |

## Gas Input Rate Measurement (Natural Gas Only)

The gas input rate to the furnace must never be greater than that specified on the unit rating plate. To measure natural gas input using the gas meter, use the following procedure.

1. Turn OFF the gas supply to all other gas-burning appliances except the furnace.
2. While the furnace is operating, time and record one complete revolution of the smallest gas meter dial.
3. Calculate the number of seconds per cubic foot (sec/ft$^3$) of gas being delivered to the furnace. If the dial is a one cubic foot dial, divide the number of seconds recorded in step 2 by one. If the dial is a two cubic foot dial, divide the number of seconds recorded in step 2 by two.

4. Calculate the furnace input in BTUs per hour (BTU/hr). Input equals the sum of the installation's gas heating value and a conversion factor (hours to seconds) divided by the number of seconds per cubic foot. The measured input must not be greater than the input indicated on the unit rating plate.

   EXAMPLE:

   Installation's gas heating (HTG) value: 1,000 BTU/$ft^3$ (Obtained from gas supplier)

   Installation's seconds per cubic foot: 34 sec/ $ft^3$

   Conversion Factor (hours to seconds): 3600 sec/hr

   Input = (Htg. value x 3600) ÷ seconds per cubic foot

   Input = (1,000 BTU/$ft^3$ x 3600 sec/hr) ÷ 34 sec/ $ft^3$

   Input = 106,000 BTU/hr

Minor changes to the input rate may be accomplished through manifold pressure adjustments at the gas valve. Refer to *Startup Procedure and Adjustment - Gas Manifold Pressure Measurement and Adjustment* section for details. **NOTE:** The final manifold pressure cannot vary by more than ± 0.3" w.c. from the specified setting. Consult your local gas supplier if additional input rate adjustment is required.

5. Repeat steps 2 through 4 on high stage.
6. Turn ON gas to and relight all other appliances turned off in step 1. Be certain that all appliances are functioning properly and that all pilot burners are operating.

## Temperature Rise

Temperature rise must be within the range specified on the unit rating plate. An incorrect temperature rise may result in condensing in or overheating of the heat exchanger. An airflow and temperature rise table is provided in the Specification Sheet applicable to your model. Determine and adjust temperature rise as follows:

1. Operate furnace with burners firing for approximately ten minutes. Ensure all registers are open and all duct dampers are in their final (fully or partially open) position.
2. Place thermometers in the return and supply ducts as close to the furnace as possible. Thermometers must not be influenced by radiant heat by being able to "see" the heat exchanger.
3. Subtract the return air temperature from the supply air temperature to determine the air temperature rise. Allow adequate time for thermometer readings to stabilize.
4. Adjust temperature rise by adjusting the circulator blower speed. Increase blower speed to reduce temperature rise. Decrease blower speed to increase temperature rise. Refer to *Startup Procedure and Adjustment -Circulator Blower Speeds* for speed changing details.

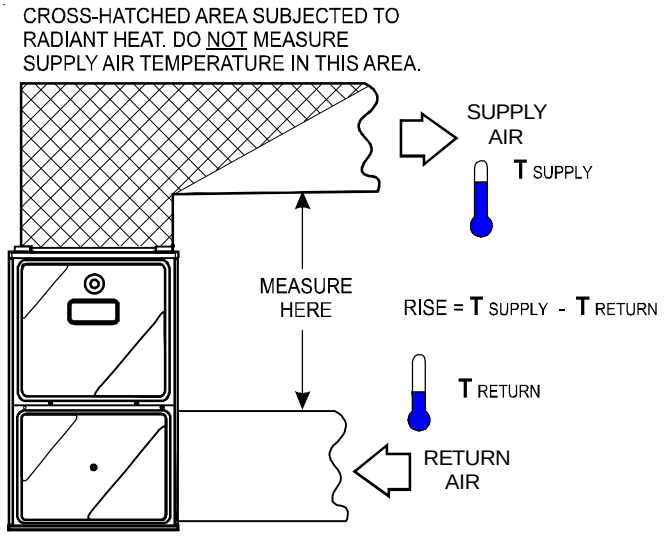


**Temperature Rise Measurement**

## Circulator Blower Speeds

**WARNING**

**To avoid personal injury or death due to electrical shock, turn OFF power to the furnace before changing speed taps.**

This furnace is equipped with a multi-speed circulator blower. This blower provides ease in adjusting blower speeds. The Specification Sheet applicable to your model provides an airflow table, showing the relationship between airflow (CFM) and external static pressure (E.S.P.), for the proper selection of heating and cooling speeds. The heating blower speed is shipped set at "B", and the cooling blower speed is set at "D". These blower speeds should be adjusted by the installer to match the installation requirements so as to provide the correct heating temperature rise and correct cooling CFM.

Use the dual 7-segment LED display adjacent to the dip switches to obtain the approximate airflow quantity. The airflow quantity is displayed as a number on the display, rounded to the nearest 100 CFM. The display alternates airflow delivery indication and the operating mode indication.

**Example:** The airflow being delivered is 1225 CFM. The display indicates 12. If the airflow being delivered is 1275, the display indicates 13.

1. Determine the tonnage of the cooling system installed with the furnace. If the cooling capacity is in BTU/hr divide it by 12,000 to convert capacity to TONs.

   **Example:** Cooling Capacity of 30,000 BTU/hr.
   30,000/12,000 = 2.5 Tons
2. Determine the proper air flow for the cooling system. Most cooling systems are designed to work with air flows between 350 and 450 CFM per ton. Most manufacturers recommend an air flow of about 400 CFM per ton.

   **Example:** 2.5 tons X 400 CFM per ton = 1000 CFM

The cooling system manufacturer's instructions must be checked for required air flow. Any electronic air cleaners or other devices may require specific air flows, consult installation instructions of those devices for requirements.

3. Knowing the furnace model, locate the high stage cooling air flow charts in the Specification Sheet applicable to your model. Look up the cooling air flow determined in step 2 and find the required cooling speed and adjustment setting.

   **Example:** A DM96VC0704CX furnace installed with a 2.5 ton air conditioning system. The air flow needed is 1000 CFM. Looking at the cooling speed chart for DM96VC0704CX, find the air flow closest to 1000 CFM. A cooling airflow of 990 CFM can be attained by setting the cooling speed to "C" and the adjustment to -10% trim.

4. Continuous fan speeds that provide 25, 50, 75 and 100% of the furnace's maximum airflow capability are selectable via dip switches S5- 3, 4.

   **Example:** If the furnace's maximum airflow capability is 2000 CFM and 25% continuous fan speed is selected, the continuous fan speed will be 0.25 x 2000 CFM = 500 CFM.

5. Locate the blower speed selection DIP (S3) switches on the integrated control module. Select the desired "cooling" speed tap by positioning switches 1 and 2 appropriately. Select the desired "adjust" tap by positioning switches 3 and 4 appropriately. To enable adjustments and select -5, 5, -10 or 10% trim, you must set dip switch S5-2 to ON. If S5-2 is in the OFF position , you will receive 0% trim. Refer to the following figure for switch positions and their corresponding taps. Verify CFM by noting the number displayed on the dual 7-segment LED display.

6. The multi-speed circulator blower also offers several custom ON/OFF ramping profiles. These profiles may be used to enhance cooling performance and increase comfort level. The ramping profiles are selected using DIP switches S4-1, 2. Refer to the following figure for switch positions and their corresponding taps. Refer to the following bullet points for a description of each ramping profile. Verify CFM by noting the number displayed on the dual 7-segment LED display.

| Switch Bank: S4 | | |
|---|---|---|
| Ramping Profiles | DIP Switch No. | |
| | 1 | 2 |
| A* | OFF | OFF |
| B | ON | OFF |
| C | OFF | ON |
| D | ON | ON |
| (*Indicates factory setting) | | |

- **Profile A** provides only an OFF delay of one (1) minute at 100% of the cooling demand airflow.

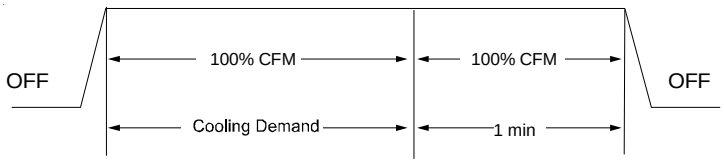


- **Profile B** ramps up to full cooling demand airflow by first stepping up to 50% of the full demand for 30 seconds. The motor then ramps to 100% of the required airflow. A one (1) minute OFF delay at 100% of the cooling airflow is provided.

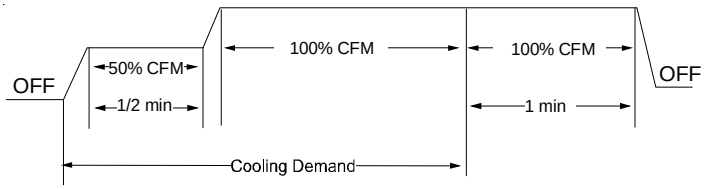


- **Profile C** ramps up to 85% of the full cooling demand airflow and operates there for approximately 7 1/2 minutes. The motor then steps up to the full demand airflow. Profile C also has a one (1) minute 100% OFF delay.

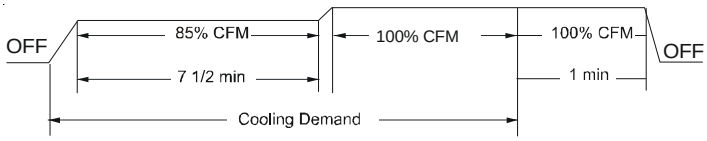


| Switch Bank: S3 | | |
|---|---|---|
| Cooling Speed Taps | DIP Switch No. | |
| | 1 | 2 |
| A | OFF | OFF |
| B | ON | OFF |
| C | OFF | ON |
| D* | ON | ON |
| (*Indicates factory setting) | | |

| Switch Bank: S3 | | |
|---|---|---|
| Adjust Taps | DIP Switch No. | |
| | 3 | 4 |
| + 5%* | OFF | OFF |
| - 5% | ON | OFF |
| + 10% | OFF | ON |
| - 10% | ON | ON |
| (*Indicates factory setting) | | |

**NOTE:** To enable adjustments and select -5, 5, -10 or 10% trim, you must set dip switch S5-2 to ON. If S5-2 is in the OFF position, you will receive 0% trim.

- **Profile D** ramps up to 50% of the demand for 1/2 minute, then ramps to 85% of the full cooling demand airflow and operates there for approximately 7 1/2 minutes. The motor then steps up to the full demand airflow. Profile D has a 1/2 minute at 50% airflow OFF delay.

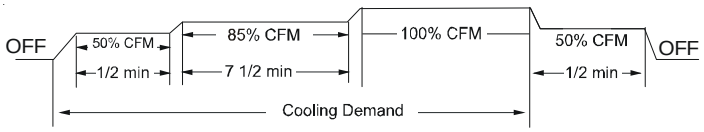

| Model | Tap | Low Stage Cool | High Stage Cool | Low Stage Heat | High Stage Heat |
|---|---|---|---|---|---|
| DM96VC0456BX* | A | 390 | 600 | 581 | 818 |
| | B | 520 | 800 | 644 | 919 |
| | C | 650 | 1000 | 711 | 1022 |
| | D | 780 | 1200 | 795 | 1134 |
| DM96VC0704CX* | A | 390 | 600 | 840 | 1210 |
| | B | 520 | 800 | 920 | 1325 |
| | C | 715 | 1100 | 1000 | 1440 |
| | D | 929 | 1429 | 1080 | 1555 |
| DM96VC0905CX* | A | 550 | 810 | 1050 | 1490 |
| | B | 770 | 1100 | 1120 | 1570 |
| | C | 1000 | 1470 | 1200 | 1690 |
| | D | 1250 | 1810 | 1250 | 1780 |
| DM96VC0905DX* | A | 520 | 800 | 1125 | 1620 |
| | B | 715 | 1000 | 1195 | 1721 |
| | C | 910 | 1400 | 1265 | 1822 |
| | D | 1170 | 1800 | 1335 | 1922 |
| DM96VC1155DX* | A | 520 | 800 | 1230 | 1771 |
| | B | 715 | 1100 | 1265 | 1822 |
| | C | 910 | 1400 | 1300 | 1872 |
| | D | 1170 | 1800 | 1335 | 1922 |
| DC96VC0714CX* | A | 360 | 660 | 870 | 1230 |
| | B | 520 | 830 | 950 | 1350 |
| | C | 780 | 1130 | 1040 | 1470 |
| | D | 960 | 1460 | 1130 | 1600 |
| DC96VC0915DX* | A | 560 | 810 | 1120 | 1620 |
| | B | 740 | 1110 | 1220 | 1760 |
| | C | 920 | 1430 | 1280 | 1860 |
| | D | 1190 | 1860 | 1340 | 1970 |
| DC96VC1155DX* | A | 508 | 783 | 1214 | 1759 |
| | B | 690 | 1091 | 1229 | 1791 |
| | C | 906 | 1406 | 1296 | 1838 |
| | D | 1165 | 1809 | 1302 | 1878 |

**Airflow Table**

7. Select the heating speed for your model from the heating speed chart in the Specification Sheet. The adjust setting (already established by the cooling speed selection) determines which set of speeds are available. The selected speed must provide a temperature rise within the rise range listed with the particular model.

   **Example:** If the DM96VC0704CX is set for 1210 CFM on cooling, the "ADJUST" is set to "+" (plus). The four heating speeds available are "A Plus", "B Plus", "C Plus", and "D Plus". "A Plus" has a rise of 46°F for both stages which is within the 30-60°F rise range for the DM96VC0704CX . This setting will keep electrical consumption to a minimum. Set the "Heat" speed DIP switches to "A".

| Switch Bank: S4 | | |
|---|---|---|
| Heating Airflow | DIP Switch No. | |
| | 3 | 4 |
| A | OFF | OFF |
| B* | ON | OFF |
| C | OFF | ON |
| D | ON | ON |
| (*Indicates factory setting) | | |

8. Select the desired "heating" speed tap by positioning switches S4- 3,4 appropriately. Refer to figure above. Verify CFM by noting the number displayed on the dual 7-segment LED display.

In general lower heating speeds will: reduce electrical consumption, lower operating sound levels of the blower, and increase the outlet air temperature delivered to the home. The speeds available allow the blower performance to be optimized for the particular homeowner's needs.

### Blower Heat Off Delay Timings

The integrated control module provides a selectable heat off delay function. The heat off delay period may be set to 90, 120, 150, 180 seconds using the DIP switches or jumper provided on the control module. The delay is factory shipped at 150 seconds but may be changed to suit the installation requirements and/or homeowner preference. Refer to the following figures for switch positions and corresponding delay times.

| Switch Bank: S1 | | |
|---|---|---|
| Heat OFF Delay | DIP Switch No. | |
| | 1 | 2 |
| 90 seconds | OFF | OFF |
| 120 seconds | ON | OFF |
| 150 seconds* | OFF | ON |
| 180 seconds | ON | ON |
| (*Indicates factory setting) | | |

**Heat Off Delay Dip Switches**

## *ComfortNet™ System*

### Overview

The ComfortNet system is a system that includes a ComfortNet compatible furnace and air conditioner or heat pump with a CTK0* thermostat. A valid ComfortNet system could also be a compatible furnace, CTK0* thermostat and non-compatible, single stage air conditioner. Any other system configurations are considered invalid ComfortNet systems and must be connected as a traditional (or non-communicating) system (*see Electrical Connections* for wiring connections).

A ComfortNet heating/air conditioning system differs from a non-communicating/traditional system in the manner in which the indoor unit, outdoor unit and thermostat interact with one another. In a traditional system, the thermostat sends commands to the indoor and outdoor units via analog 24 VAC signals. It is a one-way communication path in that the indoor and outdoor units typically do not return information to the thermostat.

In a ComfortNet system, the indoor unit, outdoor unit, and thermostat comprising a ComfortNet system "communicate" digitally with one another, creating a two-way communications path. The thermostat still sends commands to the indoor and outdoor units. However, the thermostat may also request and receive information from both the indoor and outdoor units. This information may be displayed on the ComfortNet thermostat. The indoor and outdoor units also interact with one another. The outdoor unit may send commands to or request information from the indoor unit. This two-way digital communications between the thermostat and subsystems (indoor/outdoor unit) and between subsystems is the key to unlocking the benefits and features of the ComfortNet system.

Two-way digital communications is accomplished using only two wires. The thermostat and subsystem controls are power with 24 VAC. Thus, a maximum of 4 wires between the equipment and thermostat is all that is required to operate the system.

### Airflow Considerations

Airflow demands are managed differently in a fully communicating system than they are in a non-communicating wired system. The system operating mode (as determined by the thermostat) determines which unit calculates the system airflow demand. If the indoor unit is responsible for determining the airflow demand, it calculates the demand and sends it to the ECM motor. If the outdoor unit or thermostat is responsible for determining the demand, it calculates the demand and transmits the demand along with a fan request to the indoor unit. The indoor unit then sends the demand to the ECM motor. The table below lists the various ComfortNet systems, the operating mode, and airflow demand source.

| System | System Operating Mode | Airflow Demand Source |
|---|---|---|
| Air Conditioner + Furnace | Cooling | Air Conditioner |
| | Heating | Furnace |
| | Continuous Fan | Thermostat |
| Heat Pump + Furnace | Cooling | Heat Pump |
| | Heat Pump Heating Only | Heat Pump |
| | Auxiliary Heating | Furnace |
| | Continuous Fan | Thermostat |
| Furnace + Non-Comm 1stg Air Conditioner | Cooling | Furnace |
| | Heating | Furnace |
| | Continuous Fan | Thermostat |

For example, assume the system is an air conditioner matched with a furnace. With a call for low stage cooling, the air conditioner will calculate the system's low stage cooling airflow demand. The air conditioner will then send a fan request along with the low stage cooling airflow demand to the furnace. Once received, the furnace will send the low stage cooling airflow demand to the ECM motor. The ECM motor then delivers the low stage cooling airflow. See the applicable ComfortNet air conditioner or heat pump installation manual for the airflow delivered during cooling or heat pump heating.

In continuous fan mode, the CTK0* thermostat provides the airflow demand. The thermostat may be configured for a low, medium, or high continuous fan speed. The low, medium, and high fan speeds correspond to 25%, 50%, and 75%, respectively, of the furnaces' maximum airflow capability. During continuous fan operation, the thermostat sends a fan request along with the continuous fan demand to the furnace. The furnace, in turn, sends the demand to the ECM motor. The ECM motor delivers the requested continuous fan airflow.

### Fossil Fuel Applications

This furnace can be used in conjunction with a ComfortNet compatible heat pump in a fossil fuel application. A fossil fuel application refers to a combined gas furnace and heat pump installation which uses an outdoor temperature sensor to determine the most cost efficient means of heating (heat pump or gas furnace). When used with the CTK0* thermostat, the furnace/heat pump system is automatically configured as a fossil fuel system. The balance point temperature may be adjusted via the CTK0* thermostat advanced user menus (see CTK0* instructions for additional information).

## CTK0* Wiring

**NOTE:** A removable plug connector is provided with the control to make thermostat wire connections. This plug may be removed, wire connections made to the plug, and replaced. It is **STRONGLY** recommended that you do not connect multiple wires into a single terminal. Wire nuts are recommended to ensure one 18 AWG wire is used for each terminal. Failure to do so may result in intermittent operation.

Typical 18 AWG thermostat wire may be used to wire the system components. One hundred (100) feet is the maximum length of wire between indoor unit and outdoor unit, or between indoor unit and thermostat. Wire runs over (100) feet require larger gauge wire.

### Four-Wire Indoor and Outdoor Wiring

Typical ComfortNet wiring will consist of four wires between the indoor unit and outdoor unit and between the indoor unit and thermostat. The required wires are: (a) data lines, 1 and 2; (b) thermostat "R" (24 VAC hot) and "C" (24 VAC common).

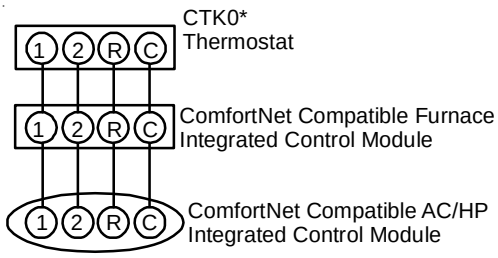


**System Wiring using Four-Wires**

### Two-Wire Outdoor, Four-Wire Indoor Wiring

Two wires can be utilized between the indoor and outdoor units. For this wiring scheme, only the data lines, 1 and 2, are needed between the indoor and outdoor units. A 40VA, 208/230 VAC to 24VAC transformer must be installed in the outdoor unit to provide 24VAC power to the outdoor unit's electronic control. See instruction manual provided with the thermostat for wiring instructions.

**NOTE:** Use of a transformer is recommended if installing a dual fuel/fossil fuel system. Failure to use the transformer in the outdoor unit could result in over loading of the furnace transformer.

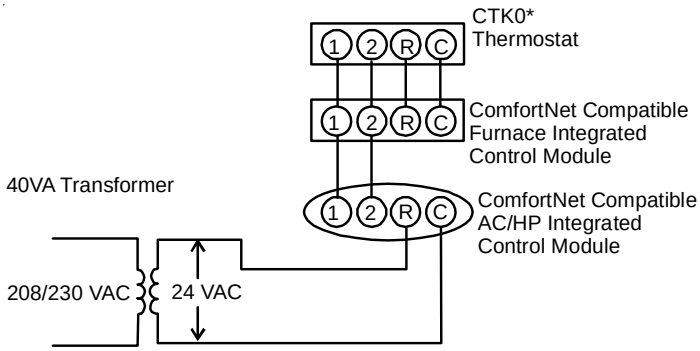


**System Wiring using Two-Wires between Furnace and AC/HP and Four-Wires between Furnace and Thermostat**

### ComfortNet™ Compatible Furnace with Non-ComfortNet compatible Single-Stage Air Conditioner

Four wires are required between the furnace and thermostat. Two wires are required between the furnace control and single stage air conditioner. For this system configuration, the "Y1" terminal on the integrated furnace control becomes an output rather than an input. The "Y1" connection to the outdoor unit is made using both 4-position thermostat connectors in the CTK0* kit. Remove the red keying tabs from the on-board connector block and position both 4-position connector such that "1", "2", "R", "C", and "Y1" positions are filled.

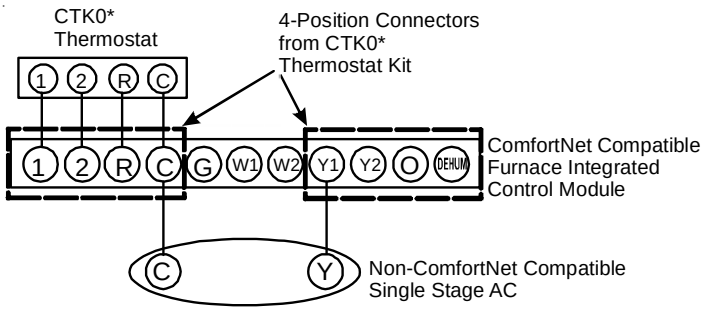


**System Wiring between Furnace and Non-Communicating Compatible Single Stage Air Conditioner**

### ComfortNet System Advanced Features

The ComfortNet system permits access to additional system information, advanced setup features, and advanced diagnostic/troubleshooting features. These advanced features are organized into a menu structure. The menus are accessed and navigated by means of the CTK0* thermostat. For details, see the thermostat instruction manual.

## FURNACE ADVANCED FEATURES MENUS

(***accessed through the communicating thermostat)***

| CONFIGURATION | |
|---|---|
| **Submenu Item** | **Indication (for Display Only; not User Modifiable)** |
| Number of Heat Stages (HT STG) | Displays the number of furnace heating stages |
| Input Rate (BTU/HR) | Displays the furnace input rate in kBtu/hr |
| Motor HP (1/2, ¾, or 1 MTR HP) | Displays the furnace indoor blower motor horsepower |

| DIAGNOSTICS | | |
|---|---|---|
| **Submenu Item** | **Indication/User Modifiable Options** | **Comments** |
| Fault 1 (FAULT #1) | Most recent furnace fault | For display only |
| Fault 2 (FAULT #2) | Next most recent furnace fault | For display only |
| Fault 3 (FAULT #3) | Next most recent furnace fault | For display only |
| Fault 4 (FAULT #4) | Next most recent furnace fault | For display only |
| Fault 5 (FAULT #5) | Next most recent furnace fault | For display only |
| Fault 6 (FAULT #6) | Least recent furnace fault | For display only |
| Clear Fault History (CLEAR) | NO or YES | Selecting “YES” clears the fault history |

**NOTE:** Consecutively repeated faults are shown a maximum of 3 times.

| IDENTIFICATION | |
|---|---|
| **Submenu Item** | **Indication (for Display Only; not User Modifiable)** |
| Model Number (MOD NUM) | Displays the furnace model number |
| Serial Number (SER NUM) | Displays the furnace serial number (Optional) |
| Software (SOFTWARE) | Displays the application software revision |

| SET-UP | | |
|---|---|---|
| **Submenu Item** | **User Modifiable Options** | **Comments** |
| Heat Airflow Trim (HT TRM) | -10% to +10% in 2% increments, default is 0% | Trims the heating airflow by the selected amount. |
| Heat ON Delay (HT ON | 5, 10, 15, 20, 25, or 30 seconds, default is 30 seconds | Selects the indoor blower heat ON delay |
| Heat OFF Delay (HT OFF) | 30, 60, 90, 120, 150, or 180 seconds, default is 150 seconds | Selects the indoor blower heat OFF delay |
| Heat Airflow (HT ADJ) | 1, 2, 3, or 4 | Selects the nominal heating airflow (see *Startup Procedure and Adjustment – Circulator Blower Speeds* for addition information) |
| Auxiliary Alarm | ON / OFF | Enable or Disable Auxiliary Alarm Input |
| Humidity Setting | ON / OFF / IND | Select Humidity Relay Functionality. ON - Humidifier is turned on with heat demand. OFF - Humidifier remains off. IND - Humidifier will cycle with humidification demand (independent of an active heat demand) |
| Humidity Fan Speed | 1, 2, 3, 4 | Select Humidity Fan Speed (this option is enabled when Humidity Setting of IND is selected). 1 - 25%, 2 - 50%, 3 - 75%, 4 - 100% of maximum airflow. |

| STATUS | |
|---|---|
| **Submenu Item** | **Indication (for Display Only; not User Modifiable)** |
| Mode (MODE) | Displays the current furnace operating mode |
| CFM (CFM) | Displays the airflow for the current operating mode |

| NON-COMM (APPLIES ONLY TO A COMMUNICATING COMPATIBLE FURNACE MATCHED WITH A NON-COMMUNICATING COMPATIBLE SINGLE STAGE AIR CONDITIONER) | | |
|---|---|---|
| **Submenu Item** | **User Modifiable Options** | **Comments** |
| Cool Airflow (CL CFM) | 18, 24, 30, 36, 42, 48, or 60, default is 18 | Selects the airflow for the non-communicating compatible single stage AC unit |
| Cool Airflow Trim (CL TRM) | -10% to +10% in 2% increments, default is 0% | Selects the airflow trim amount for the non-communicating compatible single stage AC unit |
| Cool Airflow Profile (CL PRFL) | A, B, C, or D, default is A | Selects the airflow profile for the non-communicating compatible single stage AC unit |
| Cool ON Delay (CL ON) | 5, 10, 20, or 30 seconds, default is 5 seconds | Selects the indoor blower ON delay for the non-communicating compatible single stage AC unit |
| Cool OFF Delay (CL OFF) | 30, 60, 90, or 120 seconds, default is 30 seconds | Selects the indoor blower OFF delay for the non-communicating compatible single stage AC unit |

## THERMOSTAT MENU

If this furnace is installed with a communicating compatible heat pump, the system is recognized as a dual fuel system. The balance point temperature should be set via the thermostat advanced menu. Navigate to the **THERMOSTAT** menu. Press the **INSTALLER CONFIG** key. Navigate to the **SETUP** menu and press the **INSTALLER CONFIG** button.

## DIAGNOSTICS

Accessing the furnace's diagnostics menu provides ready access to the last six faults detected by the furnace. Faults are stored most recent to least recent. Any consecutively repeated fault is stored a maximum of three times. Example: A clogged return air filter causes the furnace limit to trip repeatedly. The control will only store this fault the first three *consecutive* times the fault occurs. Navigate to the diagnostics menu as described above in the thermostat installation manual.

**NOTE:** It is highly recommended that the fault history be cleared when performing maintenance or servicing the furnace.

## NETWORK TROUBLESHOOTING

Communications is achieved by taking the difference between two dc signals. The signals and transmission lines are referred to as "data 1" and "data 2". Each transmission line is biased to approximately 2.5Vdc. During data reception/transmission, the data lines vary between +5V and ground. (When data 1 is increasing towards +5V, data 2 is decreasing towards ground and when data 1 is decreasing towards ground, data 2 is increasing towards +5V. Typically, the data 1 line is approximately 2.6Vdc and the data 2 transmission line is approximately 2.3Vdc. The voltage difference between data 1 and data 2 is typically 0.2 to 0.6 Vdc.

The ComfortNet™ system is a fully communicating system, and thus, constitutes a network. Occasionally the need to troubleshoot the network may arise. The integrated furnace control has some on-board tools that may be used to troubleshoot the network. These tools are: red communications LED, green receive (Rx) LED, and learn button.

- Red communications LED – Indicates the status of the network. The table below indicates the LED status and the corresponding potential problem.
- Green receive LED – Indicates network traffic. The table below indicates the LED status and the corresponding potential problem.
- Learn button – Used to reset the network. Depress the button for approximately 2 seconds to reset the network.

| | LED | Description | Possible Cause | Corrective Action | Comments |
|---|---|---|---|---|---|
| | Off | Normal condition | None | None | None |
| Red Communications LED | 1 Flash | Communications Failure | Communications Failure | •Depress Learn Button<br>•Verify that bus BIAS and TERM dipswitches are in the ON position. | •Depress once quickly for a power-up reset<br>•Depress and hold for 2 seconds for an out-of-box reset |
| | 2 Flashes | Out-of-box reset | •Control power up<br>•Learn button depressed | None | None |
| Green Receive LED | Off | •Nopower<br>•Communications error | •No power to furnace<br>•Open fuse<br>•Communications error | •Check fuses and circuit breakers; replace/reset<br>•Replace blown fuse<br>•Check for shorts in low voltage wiring in furnace/ system<br>•Reset network by depressing learn button<br>•Check data 1/ data 2 voltages | •Turn power OFF prior to repair |
| | 1 Steady Flash | No network found | •Broken/ disconnected data wire(s)<br>•Furnace is installed as a legacy/ traditional system | •Check communications wiring (data 1/ data 2 wires)<br>•Check wire connections at terminal block<br>•Verify furnace installation type (legacy/ traditional or communicating) Check data 1/ data 2 voltages | •Turn power OFF prior to repair<br>•Verify wires at terminal blocks are securely twisted together prior to inserting into terminal block<br>•Verify data1 and data voltages as described above |
| | Rapid Flashing | Normal network traffc | Control is "talking" on network as expected | None | None |
| | On Solid | Data 1/ Data 2 miss-wire | •Data 1 and data 2 wires reversed at furnace, thermostat, or CT™ compatible outdoor AC/ HP<br>•Short between data 1 and data 2 wires<br>•Short between data 1 or data 2 wires and R (24VAC) or C (24VAC common) | •Check communications wiring (data 1/ data 2 wires)<br>•Check wire connections at terminal block<br>•Check data 1/ data 2 voltages | •Turn power OFF prior to repair<br>•Verify wires at terminal blocks are securely twisted together prior to inserting into terminal block<br>•Verify data1 and data voltages as described above |

### System Troubleshooting

**NOTE:** Refer to the instructions accompanying the ComfortNet compatible outdoor AC/HP unit for troubleshooting information.

Refer to the Troubleshooting Chart in the back of this manual for a listing of possible furnace error codes, possible causes and corrective actions.

## *Normal Sequence of Operation*

### Power Up

The normal power up sequence is as follows:

- 115 VAC power applied to furnace.
- Integrated control module performs internal checks.
- Integrated control module displays **88** on dual 7-segment display LED's.
- Integrated control module monitors safety circuits continuously.
- Furnace awaits call from thermostat. Dual 7-segment LED's display **0**π while awaiting call from thermostat.

### Heating Mode

The normal operational sequence in heating mode is as follows:

- R and W1 (or R and W1/W2) thermostat contacts close, initiating a call for heat.
- Integrated control module performs safety circuit checks.
- Induced draft blower is energized on high speed for a 15-second prepurge. Humidifier terminal is energized with induced draft blower.
- Induced draft blower steps to low speed following prepurge. Low stage pressure switch contacts are closed.
- Igniter warm up begins upon step to low speed and presence of closed low stage pressure switch contacts.
- Gas valve opens at end of igniter warm up period, delivering gas to burners and establishing flame.
- Integrated control module monitors flame presence. Gas valve will remain open only if flame is detected.
- If the thermostat call is for low heat, gas valve and induced draft blower will continue on low stage. If the call is for high heat, the gas valve and induced draft blower will change to high stage.
- Circulator blower is energized on heat speed following a thirty (30) second blower on delay. The circulator blower requires thirty seconds to ramp up to full speed. Electronic air cleaner terminal is energized with circulator blower.
- Furnace is now operating on the specified stage called for by the two-stage thermostat.
- Furnace runs, integrated control module monitors safety circuits continuously.
- If the two-stage thermostat changes the call from low heat to high heat, the integrated control module will immediately switch the induced draft blower, gas valve, and circulator blower to their high stage settings.
- If the two-stage thermostat changes the call from high heat to low heat, the control will immediately switch the induced draft blower and gas valve to their low stage settings. The circulator blower will remain on high heating speed for thirty (30) seconds before switching to the low heat circulating speed.
- R and W1 (or R and W1/W2) thermostat contacts open, completing the call for heat.
- Gas valve closes, extinguishing flame.
- Induced draft blower is de-energized following a fifteen second post purge. Humidifier terminals are de-energized.
- Circulator blower continues running for the selected heat off delay period (90, 120, 150 or 180 seconds). The speed run during this period depends on the last heat call provided by the thermostat.

  If the last call for heat was a call for low heat, the air circulator motor will run on low heat speed for the duration of the heat off delay period (90, 120, 150 or 180 seconds).

  If the last call for heat was a call for high heat, the air circulating motor will run on the high heating speed for thirty (30) seconds and then switch to the low heating speed for the **balance** of the heat off delay period (60, 90, 120 or 150 seconds).
- Circulator blower and electronic air cleaner terminal is de-energized.
- Circulator blower ramps down to OFF during the 30 seconds following the heat off delay period.
- Furnace awaits next call from thermostat.

### Cooling Mode

The normal operational sequence in cooling mode is as follows:

- R and Y1/G or Y2/G thermostat contacts close, initiating a call for cool.
- Integrated control module performs safety circuit checks.
- Outdoor fan and compressor are energized to their appropriate speed.
- Circulator blower is energized on the appropriate cool speed at the level and time determined by the selected ramping profile. Electronic air cleaner terminal is energized with circulator blower.
- Furnace circulator blower and outdoor cooling unit run their appropriate speeds, integrated control module monitors safety circuits continuously.
- R and Y1/G or Y2/G thermostat contacts open, completing the call for cool.
- Outdoor fan and compressor are de-energized.
- Circulator blower continues running during a cool off delay period. The OFF delay time and airflow level are determined by the selected ramping profile.
- Electronic air cleaner terminal and circulator blower are de-energized.
- Furnace awaits next call from thermostat.

### Fan Only Mode

The normal operational sequence in fan only mode is as follows:

- R and G thermostat contacts close, initiating a call for fan.
- Integrated control module performs safety circuit checks.
- Circulator blower is energized on continuous fan speed (25, 50, 75 or 100% of the furnace's maximum airflow capability. Fan speed selected by dip switches) following a five (5) second delay. Electronic air cleaner terminal is energized.
- Circulator blower runs, integrated control module monitors safety circuits continuously.
- R and G thermostat contacts open, completing the call for fan.
- Circulator blower is de-energized. Electronic air cleaner terminal is de-energized.
- Furnace awaits next call from thermostat.

## *Operational Checks*

The burner flames should be inspected with the burner compartment door installed. Flames should be stable, quiet, soft, and blue (dust may cause orange tips but they must not be yellow). Flames should extend directly outward from the burners without curling, floating, or lifting off. Flames must not impinge on the sides of the heat exchanger firing tubes.

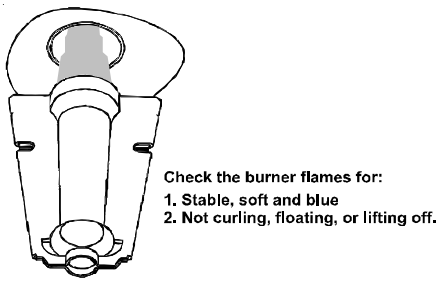


**Burner Flame**

## *Safety Circuit Description*

A number of safety circuits are employed to ensure safe and proper furnace operation. These circuits serve to control any potential safety hazards and serve as inputs in the monitoring and diagnosis of abnormal function. These circuits are continuously monitored during furnace operation by the integrated control module.

### Integrated Control Module

The integrated control module is an electronic device which, if a potential safety concern is detected, will take the necessary precautions and provide diagnostic information through an LED.

### Primary Limit

The primary limit control is located on the partition panel and monitors heat exchanger compartment temperatures. It is a normally-closed (electrically), automatic reset, temperature-activated sensor. The limit guards against overheating as a result of insufficient conditioned air passing over the heat exchanger.

### Auxiliary Limit

The auxiliary limit controls are located on or near the circulator blower and monitors blower compartment temperatures. They are a normally-closed (electrically), manual-reset sensors. These limits guard against overheating as a result of insufficient conditioned air passing over the heat exchanger.

### Rollout Limit

The rollout limit controls are mounted on the burner/manifold assembly and monitor the burner flame. They are normally-closed (electrically), manual-reset sensors. These limits guard against burner flames not being properly drawn into the heat exchanger.

### Pressure Switches

The pressure switches are normally-open (closed during operation) negative air pressure-activated switches. They monitor the airflow (combustion air and flue products) through the heat exchanger via pressure taps located on the induced draft blower and the coil front cover. These switches guard against insufficient airflow (combustion air and flue products) through the heat exchanger and/or blocked condensate drain conditions.

### Flame Sensor

The flame sensor is a probe mounted to the burner/manifold assembly which uses the principle of flame rectification to determine the presence or absence of flame.

## *Troubleshooting*

### Electrostatic Discharge (ESD) Precautions

**NOTE:** Discharge body's static electricity before touching unit. An electrostatic discharge can adversely affect electrical components.

Use the following precautions during furnace installation and servicing to protect the integrated control module from damage. By putting the furnace, the control, and the person at the same electrostatic potential, these steps will help avoid exposing the integrated control module to electrostatic discharge. This procedure is applicable to both installed and uninstalled (ungrounded) furnaces.

1. Disconnect all power to the furnace. Do not touch the integrated control module or any wire connected to the control prior to discharging your body's electrostatic charge to ground.
2. Firmly touch a clean, unpainted, metal surface of the furnace away from the control. Any tools held in a person's hand during grounding will be discharged.
3. Service integrated control module or connecting wiring following the discharge process in step 2. Use caution not to recharge your body with static electricity; (i.e., do not move or shuffle your feet, do not touch ungrounded objects, etc.). If you come in contact with an ungrounded object, repeat step 2 before touching control or wires.
4. Discharge your body to ground before removing a new control from its container. Follow steps 1 through 3 if installing the control on a furnace. Return any old or new controls to their containers before touching any ungrounded object.

### Diagnostic Chart

**WARNING**

**HIGH VOLTAGE !**

**To avoid personal injury or death due to electrical shock, disconnect electrical power BEFORE performing any service or maintenance.**

Refer to the *Troubleshooting Chart* in the back of this manual for assistance in determining the source of unit operational problems. The dual 7-segment LED display will display an error code that may contain a letter and number. The error code may be used to assist in troubleshooting the unit.

### Resetting From Lockout

Furnace lockout results when a furnace is unable to achieve ignition after three attempts during a single call for heat. It is characterized by a non-functioning furnace and a **E0** code displayed on the dual 7-segment display. If the furnace is in "lockout", it will (or can be) reset in any of the following ways.

1. Automatic reset. The integrated control module will automatically reset itself and attempt to resume normal operations following a one hour lockout period.
2. Manual power interruption. Interrupt 115 volt power to the furnace.
3. Manual thermostat cycle. Lower the thermostat so that there is no longer a call for heat for 1 -20 seconds then reset to previous setting.

**NOTE:** If the condition which originally caused the lockout still exists, the control will return to lockout. Refer to the *Troubleshooting Chart* for aid in determining the cause.

## *Maintenance*

**WARNING**

**To avoid electrical shock, injury or death, disconnect electrical power before performing any maintenance. If you must handle the igniter, handle with care. Touching the igniter element with bare fingers, rough handling or vibration could damage the igniter resulting in premature failure. Only a qualified servicer should ever handle the igniter.**

### Annual Inspection

The furnace should be inspected by a qualified installer, or service agency at least once per year. This check should be performed at the beginning of the heating season. This will ensure that all furnace components are in proper working order and that the heating system functions appropriately. Pay particular attention to the following items. Repair or service as necessary.

- Flue pipe system. Check for blockage and/or leakage. Check the outside termination and the connections at and internal to the furnace.
- Heat exchanger. Check for corrosion and/or buildup within the heat exchanger passageways.
- Burners. Check for proper ignition, burner flame, and flame sense.
- Drainage system. Check for blockage and/or leakage. Check hose connections at and internal to furnace.
- Wiring. Check electrical connections for tightness and/or corrosion. Check wires for damage.
- Filters.

### Filters

**CAUTION**

**To ensure proper unit performance, adhere to the filter sizes given in the recommended Minimum Filter Size Table or Specification Sheet applicable to your model.**

### Filter Maintenance

Improper filter maintenance is the most common cause of inadequate heating or cooling performance. Filters should be cleaned (permanent) or replaced (disposable) every two months or as required. When replacing a filter, it must be replaced with a filter of the same type and size.

### Filter Removal

Depending on the installation, differing filter arrangements can be applied. Filters can be installed in either the central return register or a side panel external filter rack (upflow only). A media air filter or electronic air cleaner can be used as an alternate filter. Follow the filter sizes given in the Recommended Minimum Filter size table to ensure proper unit performance.

To remove filters from an external filter rack in an upright upflow installation, follow the directions provided with external filter rack kit.

#### *Horizontal Unit Filter Removal*

Filters in horizontal installations are located in the central return register or the ductwork near the furnace.

To remove:

1. Turn OFF electrical power to furnace.
2. Remove filter(s) from the central return register or ductwork.
3. Replace filter(s) by reversing the procedure for removal.
4. Turn ON electrical power to furnace.

#### *Media Air Filter or Electronic Air Cleaner Removal*

Follow the manufacturer's directions for service.

### Burners

Visually inspect the burner flames periodically during the heating season. Turn on the furnace at the thermostat and allow several minutes for flames to stabilize, since any dislodged dust will alter the flames normal appearance. Flames should be stable, quiet, soft, and blue (dust may cause orange tips but they must not be yellow). They should extend directly outward from the burners without curling, floating, or lifting off. Flames must not impinge on the sides of the heat exchanger firing tubes.

### Induced Draft and Circulator Blowers

The bearings in the induced draft blower and circulator blower motors are permanently lubricated by the manufacturer. No further lubrication is required. Check motor windings for accumulation of dust which may cause overheating. Clean as necessary.

### Condensate Trap and Drain System (Qualified Servicer Only)

Annually inspect the drain tubes, drain trap, and field-supplied drain line for proper condensate drainage. Check drain system for hose connection tightness, blockage, and leaks. Clean or repair as necessary.

### Flame Sensor (Qualified Servicer Only)

Under some conditions, the fuel or air supply can create a nearly invisible coating on the flame sensor. This coating acts as an insulator causing a drop in the flame sense signal. If the flame sense signal drops too low the furnace will not sense flame and will lock out. The flame sensor should be carefully cleaned by a qualified servicer using emery cloth or steel wool. Following cleaning, the flame sense signal should be as indicated in the Specifications Sheet.

### Flue Passages (Qualified Servicer Only)

The heat exchanger flue passageways should be inspected at the beginning of each heating season. If necessary, clean the passageways as outlined below.

1. Turn OFF the electrical power and gas supply to the furnace.
2. Disconnect the gas line and remove the burner/ manifold assembly by removing the screws securing the assembly to the partition panel.
3. Disconnect the flue pipe system from the induced draft blower.
4. Remove the induced draft blower, drain and pressure tap hoses from the recuperator coil front cover.
5. Remove the recuperator coil front cover to expose the coil tubes and turbulators.
6. Remove the recuperator coil turbulators individually by slowly pulling each turbulator forward firmly.
7. Clean the recuperator coil tubes using a long handle wire brush, such as a gun cleaning brush.
8. Clean the primary heat exchanger tubes using a wire brush attached to a length of high grade stainless steel cable, such as drain cleanout cable. Attach a variable speed reversible drill to the other end of the cable. Slowly rotate the cable with the drill and insert it into one of the heat exchanger tubes. While reversing the drill, work the cable in and out several times to obtain sufficient cleaning. Repeat for each tube.
9. Clean residue from furnace using a vacuum cleaner.
10. Replace the parts removed in the previous steps in reverse order.
11. Turn on electrical power and gas to furnace. Check for leaks and proper unit operation.
12. Severe heat exchanger fouling is an indication of an operational problem. Perform the checks listed in *Startup Procedure and Adjustments* to reduce the chances of repeated fouling.

## *Before Leaving an Installation*

- Cycle the furnace with the thermostat at least three times. Verify cooling and fan only operation.
- Review the Owner's Manual with the homeowner and discuss proper furnace operation and maintenance.
- Leave literature packet near furnace.

## *Repair and Replacement Parts*

- When ordering any of the listed functional parts, be sure to provide the furnace model, manufacturing, and serial numbers with the order.
- Although only functional parts are shown in the parts list, all sheet metal parts, doors, etc. may be ordered by description.
- Parts are available from your distributor.

Functional Parts List-

| | |
|---|---|
| Gas Valve | Blower Motor |
| Gas Manifold | Blower Wheel |
| Natural Gas Orifice | Blower Mounting Bracket |
| Propane Gas Orifice | Blower Cutoff |
| Igniter | Blower Housing |
| Flame Sensor | Inductor |
| Rollout Limit Switch | Heat Exchanger with |
| Primary Limit Switch | Recuperator Coil |
| Auxiliary Limit Switch | Coil Front Cover |
| Pressure Switch | Integrated Control Module |
| Induced Draft Blower | Transformer |
| Door Switch | |

## DIP SWITCHES

| Switch Bank | Purpose | Function | Dip Switch | | | |
|---|---|---|---|---|---|---|
| | | | 1 | 2 | 3 | 4 |
| S1 | Heating Off Delay | 90 | Off | Off | | |
| | | 120 | **On** | **Off** | | |
| | | 150 | Off | On | | |
| | | 180 | On | On | | |
| | Thermostat Setup | 2 Stage Stat | | | **On** | **On** |
| | | 2 Stage Stat | | | On | Off |
| | | 1 Stg Stat 5 min delay | | | Off | Off |
| | | 1 Stg Stat auto delay | | | Off | On |
| S3 | Cooling Airflow | A | Off | Off | | |
| | | B | On | Off | | |
| | | C | Off | On | | |
| | | D | **On** | **On** | | |
| | Trim | Add 5% | | | **Off** | **Off** |
| | | Minus 5% | | | On | Off |
| | | Add 10% | | | Off | On |
| | | Minus 10% | | | On | On |
| S4 | Ramping Profile | A | **Off** | **Off** | | |
| | | B | On | Off | | |
| | | C | Off | On | | |
| | | D | On | On | | |
| | Heating Airflow | A | | | Off | Off |
| | | B | | | **On** | **Off** |
| | | C | | | Off | On |
| | | D | | | On | On |
| S5 | Dehum | Disabled | **Off** | | | |
| | | Enabled | On | | | |
| | Trim | Disabled | | **Off** | | |
| | | Enabled | | On | | |
| | Continuous Fan | 25% | | | Off | Off |
| | | 50% | | | **On** | **Off** |
| | | 75% | | | Off | On |
| | | 100% | | | On | On |

# STATUS CODES

| | |
|---|---|
| | INTERNAL CONTROL FAULT/NO POWER |
| On | NORMAL OPERATION |
| E0 | LOCKOUT DUE TO EXCESSIVE RETRIES |
| E1 | LOW STAGE PRESSURE SWITCH STUCK CLOSED AT START OF HEATING CYCLE |
| E2 | LOW STAGE PRESSURE SWITCH STUCK OPEN |
| E3 | OPEN HIGH LIMIT SWITCH |
| E4 | FLAME DETECTED WHEN NO FLAME SHOULD BE PRESENT |
| E5 | OPEN FUSE |
| E6 | LOW FLAME SIGNAL |
| E7 | IGNITER FAULT OR IMPROPER GROUNDING |
| E8 | HIGH STAGE PRESSURE SWITCH STUCK CLOSED AT START OF HEATING CYCLE |
| E9 | HIGH STAGE PRESSURE SWITCH STUCK OPEN |
| EA | REVERSED 115 VAC POLARITY |
| EF | AUXILIARY SWITCH OPEN |
| d0 | DATA NOT YET ON NETWORK |
| d4 | INVALID MEMORY CARD DATA |
| b0 | BLOWER MOTOR NOT RUNNING |
| b1 | BLOWER COMMUNICATION ERROR |
| b2 | BLOWER HP MIS-MATCH |
| b3 | BLOWER MOTOR OPERATING IN POWER, TEMPERATURE, OR SPEED LIMIT |
| b4 | BLOWER MOTOR CURRENT TRIP OR LOST ROTOR |
| b5 | BLOWER MOTOR LOCKED ROTOR |
| b6 | OVER/UNDER VOLTAGE TRIP OR OVER TEMPERATURE TRIP |
| b7 | INCOMPLETE PARAMETERS SENT TO MOTOR |
| b9 | LOW INDOOR AIRFLOW |
| C1 | LOW STAGE COOL |
| C2 | HIGH STAGE COOL |
| P1 | LOW STAGE HEAT PUMP HEAT |
| P2 | HIGH STAGE HEAT PUMP HEAT |
| L0 | LOW STAGE GAS HEAT |
| HI | HIGH STAGE GAS HEAT |
| F | CONTINUOUS FAN |
| 12 | CFM/100; ALTERNATES WITH C1, C2, LO, HI, F, P1, P2 |

0140F01169 REV A

# TROUBLESHOOTING CHART

| Symptoms of Abnormal Operation (Legacy & ComfortNet™ Thermostat) | Diagnostic/ Status LED Codes | Fault Description | ComfortNet™ Thermostat Only | | Possible Causes | Corrective Actions | Notes & Cautions |
|---|---|---|---|---|---|---|---|
| | | | Message | Code | | | |
| • Furnace fails to operate<br>• Integrated control module LED display provides no signal.<br>• ComfortNet™ thermostat "Call for Service" icon illuminated<br>• ComfortNet™ thermostat scrolls "Check Furnace" message | None | • No 115 power to furnace or no 24 volt power to integrated control module<br>• Blown fuse or circuit breaker<br>• Integrated control module has an internal fault | INTERNAL FAULT | EE | • Manual disconnect switch OFF, door switch open or 24 volt wire improperly connected or loose<br>• Blown fuse or circuit breaker<br>• Integrated control module has an internal fault | • Assure 115 and 24 volt power to furnace and integrated control module.<br>• Check integrated control module fuse (3A). Replace if necessary.<br>• Check for possible shorts in 115 and 24 volt circuits. Repair as necessary.<br>• Replace bad integrated control module. | • Turn power OFF prior to repair.<br>• Replace integrated control module fuse with 3A automotive fuse.<br>• Read precautions in "Electrostatic Discharge" section of manual.<br>• Replace control with correct replacement part |
| • LED display indicates On | On | • Normal operation | None | None | • Normal operation | • None | • Normal operation |
| • Furnace fails to operate<br>• Integrated control module LED display provides E0 error code.<br>• ComfortNet™ thermostat "Call for Service" icon illuminated.<br>• ComfortNet™ thermostat scrolls "Check Furnace" message. | E0 | • Furnace lockout due to an excessive number of ignition "retries" (3 total) | LOCKOUT | E0 | • Failure to establish fame. Cause may be no gas to burners, front cover pressure switch stuck open, bad igniter or igniter alignment, improper orifces, or coated/oxidized or improperly connected fame sensor.<br>• Loss of fame after establishment. Cause may be interrupted gas supply, lazy burner fames (improper gas pressure or restriction in fue and/ or combustion air piping), front cover pressure switch opening, or improper induced draft blower performance. | • Locate and correct gas interruption.<br>• Check front cover pressure switch operation (hose, wiring, contact operation). Correct if necessary.<br>• Replace or realign igniter.<br>• Check fame sense signal. Sand sensor if coated and/or oxidized.<br>• Check fue piping for blockage, proper length, elbows, and termination.<br>• Verify proper induced draft blower performance. | • Turn power OFF prior to repair.<br>• Igniter is fragile, handle with care.<br>• Sand fame sensor with emery cloth.<br>• See "Vent/Flue Pipe" section for piping details. |
| • Furnace fails to operate.<br>• Integrated control module LED display provides E1 error code.<br>• ComfortNet™ thermostat "Call for Service" icon illuminated.<br>• ComfortNet™ thermostat scrolls "Check Furnace" message. | E1 | • Low stage pressure switch circuit is closed at start of heating cycle. | PS1 CLOSED | E1 | • Low stage pressure switch contacts sticking.<br>• Shorts in pressure switch circuit wiring. | • Replace low stage pressure switch.<br>• Repair short in wiring. | • Turn power OFF prior to repair.<br>• Replace pressure switch with proper replacement part. |

# TROUBLESHOOTING CHART

| Symptoms of Abnormal Operation (Legacy & ComfortNet™ Thermostat) | Diagnostic/ Status LED Codes | Fault Description | ComfortNet™ Thermostat Only | | Possible Causes | Corrective Actions | Notes & Cautions |
|---|---|---|---|---|---|---|---|
| | | | Message | Code | | | |
| • Induced draft blower runs continuously with no further furnace operation.<br>• Integrated control module LED display provides E2 error code.<br>• ComfortNet™ thermostat "Call for Service" icon illuminated.<br>• ComfortNet™ thermostat scrolls "Check Furnace" message. | E2 | • Low stage pressure switch circuit is not closed. | PS1 OPEN | E2 | • Pressure switch hose blocked pinched, or connected improperly.<br>• Blocked fue and/or inlet air pipe, blocked drain system or weak induced draft blower.<br>• Incorrect pressure switch set point or malfunctioning switch contacts.<br>• Loose or improperly connected wiring. | • Inspect pressure switch hose. Repair/replace if necessary.<br>• Inspect fue and/or inlet air piping for blockage, proper length, elbows, and termination. Check drain system. Correct as necessary.<br>• Check induced draft blower performance. Correct as necessary.<br>• Correct pressure switch set point or contact motion.<br>• Tighten or correct wiring connection. | • Turn power OFF prior to repair.<br>• Replace pressure switch with proper replacement part.<br>• Replace induced draft blower with proper replacement part. |
| • Circulator blower runs continuously. No furnace operation.<br>• Integrated control module LED display provides E3 error code.<br>• ComfortNet™ thermostat "Call for Service" icon illuminated.<br>• ComfortNet™ thermostat scrolls "Check Furnace" message. | E3 | • Primary limit or auxiliary limit circuit is open.<br>• Rollout limit circuit is open. | HIGH LIMIT OPEN | E3 | • Insuffcient conditioned air over the heat exchanger. Blocked flters, restrictive ductwork, improper circulator blower speed, or failed circulator blower motor.<br>• Flame rollout.<br>• Misaligned burners, blocked fue and/or air inlet pipe, or failed induced draft blower.<br>• Loose or improperly connected wiring. | • Check flters and ductwork for blockage. Clean flters or remove obstruction.<br>• Check circulator blower speed and performance. Correct speed or replace blower motor if necessary.<br>• Check burners for proper alignment.<br>• Check fue and air inlet piping for blockage, proper length, elbows, and termination. Correct as necessary.<br>• Check induced draft blower for proper performance. Replace if necessary.<br>• Tighten or correct wiring connection. | • Turn power OFF prior to repair.<br>• See Specifcation Sheet applicable to your model* for allowable rise range and proper circulator speed.<br>• See "Vent/Flue Pipe" section for piping details. |
| • Induced draft blower and circulator blower runs continuously. No furnace operation.<br>• Integrated control module LED display provides E4 error code.<br>• ComfortNet™ thermostat "Call for Service" icon illuminated.<br>• ComfortNet™ thermostat scrolls "Check Furnace" message. | E4 | • Flame sensed with no call for heat. | IMPROPER FLAME | E4 | • Short to ground in fame sense circuit.<br>• Lingering burner fame.<br>• Slow closing gas valve. | • Correct short at fame sensor or in fame sensor wiring.<br>• Check for lingering fame.<br>• Verify proper operation of gas valve. | • Turn power OFF prior to repair. |
| • No furnace operation.<br>• Integrated control module LED display provides E5 error code.<br>• ComfortNet™ thermostat displays "Battery Power" | E5 | • Open Fuse | Not Displayed | Not Displayed | • Short in low voltage wiring | • Locate and correct short in low voltage wiring | • Turn power OFF prior to repair.<br>• Replace fuse with 3-amp automotive type |
| • Normal furnace operation.<br>• Integrated control module LED display provides E6 error code. | E6 | • Flame sense micro amp signal is low | WEAK FLAME | E6 | • Flame sensor is coated/oxidized.<br>• Flame sensor incorrectly positioned in burner fame.<br>• Lazy burner fame due to improper gas pressure or combustion air. | • Sand fame sensor if coated/oxidized.<br>• Inspect for proper sensor alignment.<br>• Check inlet air piping for blockage, proper length, elbows, and termination.<br>• Compare current gas pressure to rating plate. Adjust as needed. | • Turn power OFF prior to repair.<br>• Sand fame sensor with emery cloth.<br>• See "Vent/Flue Pipe" section for piping details.<br>• See rating plate for proper gas pressure. |

# TROUBLESHOOTING CHART

| Symptoms of Abnormal Operation (Legacy & ComfortNet™ Thermostat) | Diagnostic/ Status LED Codes | Fault Description | ComfortNet™ Thermostat Only | | Possible Causes | Corrective Actions | Notes & Cautions |
|---|---|---|---|---|---|---|---|
| | | | Message | Code | | | |
| • Furnace fails to operate.<br>• Integrated control module LED display provides E7 error code.<br>• ComfortNet™ thermostat "Call for Service" icon illuminated.<br>• ComfortNet™ thermostat scrolls "Check Furnace" message. | E7 | • Problem with igniter circuit. | IGNITER FAULT | E7 | • Improperly connected igniter.<br>• Shorted igniter.<br>• Poor unit ground.<br>• Igniter relay fault on integrated control module. | • Check and correct wiring from integrated control module to igniter.<br>• Replace shorted igniter.<br>• Check and correct unit ground wiring.<br>• Check igniter output from control. Replace if necessary. | • Turn power OFF prior to repair.<br>• Replace igniter with correct replacement part.<br>• Replace control with correct replacement part. |
| • Furnace fails to operate on high stage; furnace operates normally on low stage.<br>• Integrated control module LED display provides E8 error code. | E8 | • High stage pressure switch circuit is closed at start of heating cycle.<br>• Induced draft blower is operating.<br>• Furnace is operating on low stage only | PS2 CLOSED | E8 | • High stage pressure switch contacts sticking.<br>• Shorts in pressure switch circuit wiring. | • Replace high stage pressure switch.<br>• Repair short in wiring | • Turn power OFF prior to repair.<br>• Replace pressure switch with proper replacement part. |
| • Furnace fails to operate on high stage; furnace operates normally on low stage.<br>• Integrated control module LED display provides E9 error code. | E9 | • High stage pressure switch circuit is not closed.<br>• Induced draft blower is operating.<br>• Furnace is operating on low stage only | PS2 OPEN | E9 | • Pressure switch hose blocked pinched, or connected improperly.<br>• Blocked fue and/or inlet air pipe, blocked drain system or weak induced draft blower.<br>• Incorrect pressure switch set point or malfunctioning switch contacts.<br>• Loose or improperly connected wiring. | • Inspect pressure switch hose. Repair/replace if necessary.<br>• Inspect fue and/or inlet air piping for blockage, proper length, elbows, and termination. Check drain system. Correct as necessary.<br>• Check induced draft blower performance. Correct as necessary.<br>• Correct pressure switch set point or contact motion.<br>• Tighten or correct wiring connection. | • Turn power OFF prior to repair.<br>• Replace pressure switch with proper replacement part.<br>• Replace induced draft blower with proper replacement part. |
| • Furnace fails to operate.<br>• Integrated control module LED display provides EA error code.<br>• ComfortNet™ thermostat "Call for Service" icon illuminated.<br>• ComfortNet™ thermostat scrolls "Check Furnace" message. | EA | • Polarity of 115 volt AC is reversed | REVERSED PLTY | EA | • Polarity of 115 volt AC power to furnace or integrated module is revered.<br>• Poor unit ground | • Review wiring diagram to correct polarity.<br>• Verify proper ground. Correct if necessary.<br>• Check and correct wiring. | • Turn power OFF prior to repair. |
| • Integrated control module LED display EF error code.<br>• ComfortNet™ thermostat "Call for Service" . | EF | • Aux switch open | Aux Alarm Fault | EF | • High water level in the evaporation coil. | • Check overfow pan and service. | • Turn power OFF prior to service. |
| • Furnace fails to operate.<br>• Integrated control module LED display provides d0 error code.<br>• ComfortNet™ thermostat "Call for Service" icon illuminated.<br>• ComfortNet™ thermostat scrolls "Check Furnace" message. | d0 | • Data not yet on network. | NO NET DATA | d0 | • Furnace does not contain any shared data. | • Populate shared data set using memory card. | • Turn power OFF prior to repair<br>• Use memory card for the specifc model.<br>• Insert memory card BEFORE turning power ON. Memory card may be removed after data is loaded and power is turned off.<br>• Error code will be cleared once data is loaded. |

# TROUBLESHOOTING CHART

| Symptoms of Abnormal Operation (Legacy & ComfortNet™ Thermostat) | Diagnostic/ Status LED Codes | Fault Description | ComfortNet™ Thermostat Only | | Possible Causes | Corrective Actions | Notes & Cautions |
|---|---|---|---|---|---|---|---|
| | | | Message | Code | | | |
| • Operation different than expected or no operation.<br>• Integrated control module LED display provides d4 error code.<br>• ComfortNet™ thermostat "Call for Service" icon illuminated.<br>• ComfortNet™ thermostat scrolls "Check Furnace" message. | d4 | • Invalid memory card data. | INVALID MC DATA | d4 | • Shared data set on memory card has been rejected by integrated control module | • Verify shared data set is correct for the specifc model. Re-populate data using correct memory card if required. | • Turn power OFF prior to repair<br>• Use memory card for the specifc model.<br>• Insert memory card BEFORE turning power ON. Memory card may be removed after data is loaded and power is turned off.<br>• Error code will be cleared once data is loaded and power is turned off. |
| • Furnace fails to operate.<br>• Integrated control module LED display provides b0 error code.<br>• ComfortNet™ thermostat "Call for Service" icon illuminated.<br>• ComfortNet™ thermostat scrolls "Check Furnace" message. | b0 | • Circulator blower motor is not running when it should be running. | MOTOR NOT RUN | b0 | • Loose wiring connection at circulator motor power leads or circulator motor power leads disconnected.<br>• Open circuit in inductor or loose wiring connection at inductor (3/4 Hp and 1 Hp models only).<br>• Failed circulator blower motor. | • Tighten or correct wiring connection.<br>• Verify continuous circuit through inductor. Replace if open or short circuit.<br>• Check circulator blower motor. Replace if necessary. | • Turn power OFF prior to repair<br>• Replace inductor with correct replacement part.<br>• Replace circulator motor with correct replacement part. |
| • Furnace fails to operate.<br>• Integrated control module LED display provides b1 error code.<br>• ComfortNet™ thermostat "Call for Service" icon illuminated.<br>• ComfortNet™ thermostat scrolls "Check Furnace" message. | b1 | • Integrated control module has lost communications with circulator blower motor. | MOTOR COMM | b1 | • Loose wiring connection at circulator motor control leads.<br>• Failed circulator blower motor.<br>• Failed integrated control module. | • Tighten or correct wiring connection.<br>• Check circulator blower motor. Replace if necessary.<br>• Check integrated control module. Replace if necessary. | • Turn power OFF prior to repair<br>• Replace circulator motor with correct replacement part.<br>• Replace integrated control module with correct replacement part. |
| • Furnace fails to operate.<br>• Integrated control module LED display provides b2 error code.<br>• ComfortNet™ thermostat "Call for Service" icon illuminated.<br>• ComfortNet™ thermostat scrolls "Check Furnace" message. | b2 | • Circulator blower motor horse power in shared data set does not match circulator blower motor horse power. | MOTOR MISMATCH | b2 | • Incorrect circulator blower motor in furnace.<br>• Incorrect shared data set in integrated control module. | • Verify circulator blower if motor horse power is the same specifed for the specifc furnace model. Replace if necessary.<br>• Verify shared data set is correct for the specifc model. Re-populate data using correct memory card if required. | • Turn power OFF prior to repair<br>• Replace motor with correct replacement part.<br>• Use memory card for the specifc model<br>• Insert memory card BEFORE turning power ON. Memory card may be removed after data is loaded and power is turned off.<br>• Error code will be cleared once shared data and motor horse power match. |
| • Furnace operates at reduced performance.<br>• Airfow delivered is less than expected.<br>• Integrated control module LED display provides b3 error code. | b3 | • Circulator blower motor is operating in a power, temperature, or speed limiting condition. | MOTOR LIMITS | b3 | • Blocked flters.<br>• Restrictive ductwork.<br>• Undersized ductwork.<br>• High ambient temperatures. | • Check flters for blockage. Clean flters or remove obstruction.<br>• Check ductwork for blockage. Remove obstruction. Verify all registers are fully open.<br>• Verify ductwork is appropriately sized for system. Resize/replace ductwork if necessary.<br>• See "III. Product Description" and "IV. Location Requirements & Considerations" furnace installation requirements. | • Turn power OFF prior to repair. |

# TROUBLESHOOTING CHART

| Symptoms of Abnormal Operation (Legacy & ComfortNet™ Thermostat) | Diagnostic/ Status LED Codes | Fault Description | ComfortNet™ Thermostat Only | | Possible Causes | Corrective Actions | Notes & Cautions |
|---|---|---|---|---|---|---|---|
| | | | Message | Code | | | |
| • Furnace fails to operate.<br>• Integrated control module LED display provides b4 error code.<br>• ComfortNet™ thermostat "Call for Service" icon illuminated.<br>• ComfortNet™ thermostat scrolls "Check Furnace" message. | b4 | • Circulator blower motor senses a loss of rotor control.<br>• Circulator blower motor senses high current. | MOTOR TRIPS | b4 | • Abnormal motor loading, sudden change in speed or torque, sudden blockage of furnace air inlet or outlet. | • Check filters, filter grills/ registers, duct system, and furnace air inlet/ outlet for blockages. | • Turn power OFF prior to repair |
| • Furnace fails to operate.<br>• Integrated control module LED display provides b5 error code.<br>• ComfortNet™ thermostat "Call for Service" icon illuminated.<br>• ComfortNet™ thermostat scrolls "Check Furnace" message. | b5 | • Circulator blower motor fails to start 10 consecutive times. | MOTOR LCKD ROTOR | b5 | • Obstruction in circulator blow housing.<br>• Seized circulator blower motor bearings.<br>• Failed circulator blower motor. | • Check circulator blower for obstructions. Remove and repair/ replace wheel/motor if necessary.<br>• Check circulator blower motor shaft rotation and motor. Replace motor if necessary. | • Turn power OFF prior to repair.<br>• Replace motor with correct replacement part.<br>• Replace wheel with correct replacement part. |
| • Furnace fails to operate.<br>• Integrated control module LED display provides b6 error code.<br>• ComfortNet™ thermostat "Call for Service" icon illuminated.<br>• ComfortNet™ thermostat scrolls "Check Furnace" message. | b6 | • Circulator blower motor shuts down for over or under voltage condition.<br>• Circulator blower motor shuts down due to over temperature condition on power module. | MOTOR VOLTS | b6 | • High AC line voltage to furnace.<br>• Low AC line voltage to furnace.<br>• High ambient temperatures. | • Check power to furnace. Verify line voltage to furnace is within the range specified on the furnace rating plate.<br>• See "III. Product Description" and "IV. Location Requirements & Considerations" furnace installation requirements. | • Turn power OFF prior to repair |
| • Furnace fails to operate.<br>• Integrated control module LED display provides b7 error code.<br>• ComfortNet™ thermostat "Call for Service" icon illuminated.<br>• ComfortNet™ thermostat scrolls "Check Furnace" message. | b7 | • Circulator blower motor does not have enough information to operate properly. Motor fails to start 40 consecutive times. | MOTOR PARAMS | b7 | • Error with integrated control module.<br>• Motor has a locked rotor condition. | • Check integrated control module. Verify control is populated with correct shared data set. See data errors above for details.<br>• Check for locked rotor condition (see error code above for details). | • Turn power OFF prior to repair.<br>• Replace with correct replacement part(s).<br>• Use memory card for the specific model. |
| • Furnace operates at reduced performance or operates on low stage when high stage is expected.<br>• Integrated control module LED display provides b9 error code. | b9 | • Airflow is lower than demanded. | LOW ID AIRFLOW | B9 | • Blocked filters.<br>• Restrictive ductwork.<br>• Undersized ductwork. | • Check filters for blockage. Clean filters or remove obstruction.<br>• Check ductwork for blockage. Remove obstruction. Verify all registers are fully open.<br>• Verify ductwork is appropriately sized for system. Resize/replace ductwork if necessary. | • Turn power OFF prior to repair. |

**WARNING**

**HIGH VOLTAGE!**
**Disconnect ALL power before servicing or installing this unit. Multiple power sources may be present. Failure to do so may cause property damage, personal injury or death.**

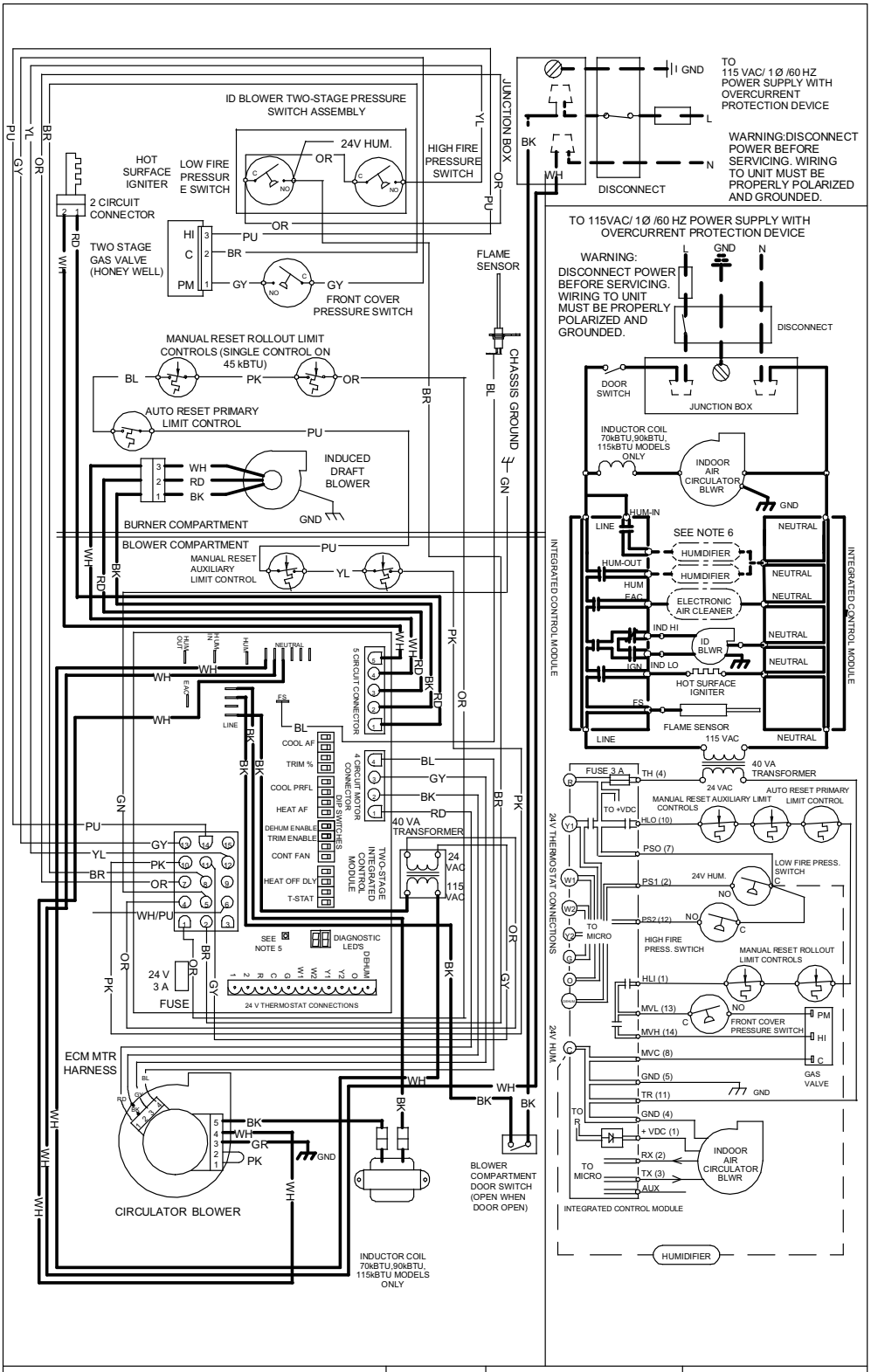


NOTES:

1. SET HEAT ANTICIPATOR ON ROOM THERMOSTAT AT 0.7 AMPS.
2. MANUFACTURER'S SPECIFIED REPLACEMENT PARTS MUST BE USED WHEN SERVICING.
3. IF ANY OF THE ORIGINAL WIRE AS SUPPLIED WITH THE FURNACE MUST BE REPLACED, IT MUST BE REPLACED WITH WIRING MATERIAL HAVING A TEMPERATURE RATING OF AT LEAST 105°C. USE COPPER CONDUCTORS ONLY.
4. UNIT MUST BE PERMANENTLY GROUNDED AND CONFORM TO N.E.C. AND LOCAL CODES.
5. TO RECALL THE LAST 6 FAULTS, MOST RECENT TO LEAST RECENT, DEPRESS SWITCH FOR MORE THAN 2 SECONDS WHILE IN STANDBY (NO THERMOSTAT INPUTS)
6. HUMDIFIER INSTALLATION OPTIONS: USE HUM TERMINAL TO RUN HUMIDIFIER DURING HEAT CALL (COMMUNICATING OR LEGACY MODES). USE HUM-IN AND HUM-OUT TERMINALS TO RUN HUMIDIFIER DURING HEAT CALL ( COMMUNICATING MODE OR LEGACY MODE) OR INDEPENDENTLY FROM HEAT CALL (COMMUNICATING MODE ONLY - SETUP IS DONE WITHIN COMMUNICATING THERMOSTAT)

0140F01201-B

COLOR CODES:
- PK PINK
- BR BROWN
- WH WHITE
- BL BLUE
- GY GRAY
- RD RED
- YL YELLOW
- OR ORANGE
- PU PURPLE
- GN GREEN
- BK BLACK

LOW VOLTAGE (24V)
LOW VOLTAGE FIELD
HI VOLTAGE (115V)
HI VOLTAGE FIELD
JUNCTION
TERMINAL
INTERNAL TO INTEGRATED CONTROL
PLUG CONNECTION

EQUIPMENT GND
FIELD GND
FIELD SPLICE
SWITCH (TEMP.)
IGNITER
SWITCH (PRESS.)
OVERCURRENT PROT. DEVICE

Wiring is subject to change. Always refer to the wiring diagram on the unit for the most up-to-date wiring.

## SPECIAL INSTRUCTIONS FOR PRODUCTS INSTALLED IN THE STATE OF MASSACHUSETTS

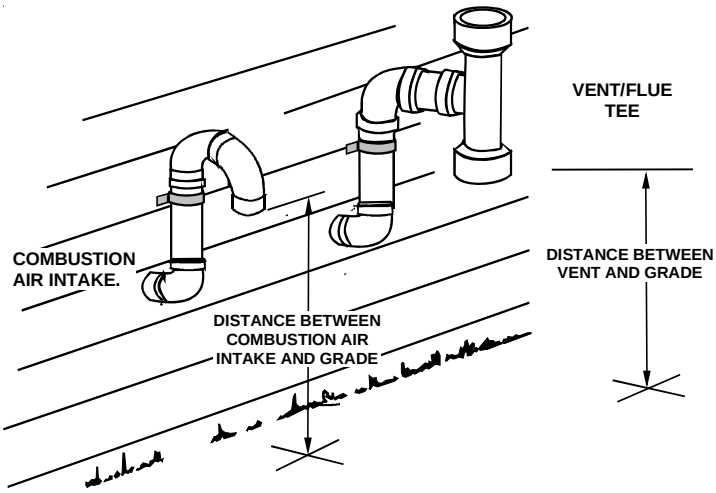


For all side wall horizontally vented gas fueled equipment installed in every dwelling, building or structure used in whole or in part for residential purposes, including those owned or operated by the Commonwealth and where the side wall exhaust vent termination is less than seven (7) feet above finished grade in the area of the venting, including but not limited to decks and porches, the following requirements shall be satisfied:

1. INSTALLATION OF CARBON MONOXIDE DETECTORS. At the time of installation of the side wall horizontal vented gas fueled equipment, the installing plumber or gasfitter shall observe that a hard wired carbon monoxide detector with an alarm and battery back-up is installed on the floor level where the gas equipment is to be installed. In addition, the installing plumber or gasfitter shall observe that a battery operated or hard wired carbon monoxide detector with an alarm is installed on each additional level of the dwelling, building or structure served by the side wall horizontal vented gas fueled equipment. It shall be the responsibility of the property owner to secure the services of qualified licensed professionals for the installation of hard wired carbon monoxide detectors
   a. In the event that the side wall horizontally vented gas fueled equipment is installed in a crawl space or an attic, the hard wired carbon monoxide detector with alarm and battery back-up may be installed on the next adjacent floor level.
   b. In the event that the requirements of this subdivision can not be met at the time of completion of installation, the owner shall have a period of thirty (30) days to comply with the above requirements; provided, however, that during said thirty (30) day period, a battery operated carbon monoxide detector with an alarm shall be installed.
2. APPROVED CARBON MONOXIDE DETECTORS. Each carbon monoxide detector as required in accordance with the above provisions shall comply with NFPA 720 and be ANSI/UL 2034 listed and IAS certified.
3. SIGNAGE. A metal or plastic identification plate shall be permanently mounted to the exterior of the building at a minimum height of eight (8) feet above grade directly in line with the exhaust vent terminal for the horizontally vented gas fueled heating appliance or equipment. The sign shall read, in print size no less than one-half (1/2) inch in size, **"GAS VENT DIRECTLY BELOW. KEEP CLEAR OF ALL OBSTRUCTIONS".**
4. INSPECTION. The state or local gas inspector of the side wall horizontally vented gas fueled equipment shall not approve the installation unless, upon inspection, the inspector observes carbon monoxide detectors and signage installed in accordance with the provisions of 248 CMR 5.08(2)(a)1 through 4.

### EXEMPTIONS

The following equipment is exempt from 248 CMR 5.08(2)(a)1 through 4:

1. The equipment listed in Chapter 10 entitled "Equipment Not Required To Be Vented" in the most current edition of NFPA 54 as adopted by the Board; and
2. Product Approved side wall horizontally vented gas fueled equipment installed in a room or structure separate from the dwelling, building or structure used in whole or in part for residential purposes.

(c) MANUFACTURER REQUIREMENTS - GAS EQUIPMENT VENTING SYSTEM PROVIDED. When the manufacturer of Product Approved side wall horizontally vented gas equipment provides a venting system design or venting system components with the equipment, the instructions provided by the manufacturer for installation of the equipment and the venting system shall include:

1. Detailed instructions for the installation of the venting system design or the venting system components; and
2. A complete parts list for the venting system design or venting system.

(d) MANUFACTURER REQUIREMENTS - GAS EQUIPMENT VENTING SYSTEM NOT PROVIDED. When the manufacturer of a Product Approved side wall horizontally vented gas fueled equipment does not provide the parts for venting the flue gases, but identifies "special venting systems", the following requirements shall be satisfied by the manufacturer:

1. The referenced "special venting system" instructions shall be included with the appliance or equipment installation instructions; and
2. The "special venting systems" shall be Product Approved by the Board, and the instructions for that system shall include a parts list and detailed installation instructions.

(e) A copy of all installation instructions for all Product Approved side wall horizontally vented gas fueled equipment, all venting instructions, all parts lists for venting instructions, and/or all venting design instructions shall remain with the appliance or equipment at the completion of the installation.

Our continuing commitment to quality products may mean a change in specifications without notice.
© 2013 DAIKIN MANUFACTURING COMPANY, L.P.
5151 San Felipe St., Suite 500, Houston, TX 77056
www.daikincomfort.com