DAIKIN

INSTALLATION INSTRUCTIONS

DM96MC & DC96MC

MODULATING GAS FURNACE

(Type FSP CATEGORY IV Direct or Non Direct Vent Air Furnace)

Installer: Affix all manuals adjacent to the unit.

These furnaces comply with requirements embodied in the American National Standard / National Standard of Canada ANSI Z21.47·CSA-2.3 Gas Fired Central Furnaces.

Intertek

RECOGNIZE THIS SYMBOL AS A SAFETY PRECAUTION.

ATTENTION INSTALLING PERSONNEL

As a professional installer you have an obligation to know the product better than the customer. This includes all safety precautions and related items.

Prior to actual installation, thoroughly familiarize yourself with this Instruction Manual. Pay special attention to all safety warnings. Often during installation or repair it is possible to place yourself in a position which is more hazardous than when the unit is in operation.

Remember, it is your responsibility to install the product safely and to know it well enough to be able to instruct a customer in its safe use.

Safety is a matter of common sense...a matter of thinking before acting. Most dealers have a list of specific good safety practices...follow them.

The precautions listed in this Installation Manual are intended as supplemental to existing practices. However, if there is a direct conflict between existing practices and the content of this manual, the precautions listed here take precedence.

*NOTE: Please contact your distributor
or our website for the applicable
Specification Sheet referred to in this manual.

IOD-2001A
9/2013

Our continuing commitment to quality products may mean a change in specifications without notice.
© 2013 DAIKIN MANUFACTURING COMPANY, L.P.
5151 San Felipe St., Suite 500, Houston, TX 77056
www.daikincomfort.com

TABLE OF CONTENTS

Safety Considerations 4
Shipping Inspection 5
Electrostatic Discharge (ESD) Precautions 5
To The Installer 5
Product Description 6
Features 6
Product Application 7
Location Requirements & Considerations 8
Clearances and Accessibility 9
Existing Furnace Removal 9
Thermostat Location 10
Combustion & Ventilation Air Requirements 10
Installation Positions 13
Horizontal Applications & Considerations 14
Furnace Suspension 14
Drain Trap and Lines 14
Leveling 14
Alternate Electrical and Gas Line Connections 14
Drain Pan 14
Freeze Protection 14
Propane Gas/High Altitude Installations 14
Vent/Flue Pipe & Combustion Air Pipe 15
Dual Certification: Non-Direct/Direct Vent 15
Materials and Joining Methods 15
Proper Vent/Flue and Combustion Air Piping Practices 17
Termination Locations 17
Special Venting Requirements For Installations In Canada 19
Standard Furnace Connections 19
Combustion Air Pipe 19
Alternate Furnace Connections 20
Non-Direct Vent (Single Pipe) Piping 21
Direct Vent (Dual Pipe) Piping 22
Vent/Intake Terminations For Installation of Multiple Direct Vent Furnaces 23
Concentric Vent Termination 23
Side Wall Vent Kit 23
Condensate Drain Lines & Drain Trap 23
Standard Right or Left Side Drain Hose Connections 24
Upright Installations-Trap on Right Side 24
Upright Installations-Trap on Left Side 25
Horizontal Installations 25
Electrical Connections 27
Wiring Harness 27
115 Volt Line Connections 27
Junction Box Relocation 27
24 Volt Thermostat Wiring 28
Single-Stage Heating Thermostat Application 29
24 Volt Dehumidistat Wiring 29
Fossil Fuel Applications 29
Line Voltage Accessories (Electronic Air Cleaner and Humidifier) 30
24 Volt Humidifier 30
Gas Supply and Piping 30
High Altitude Derate 31
Propane Gas Conversion 31
Gas Piping Connections 31
Propane Gas Tanks and Piping 33
Circulating Air & Filters 34
Duct work - Air Flow 34
Checking Duct Static 34
Bottom Return Air Opening [Upflow Models] 35
Filters - Read This Section Before Installing The Return Air Duct work 35
Upright Installations 36
Horizontal Installations 36
Startup Procedure & Adjustment 36
Heating Operation with CTK01 Thermostat (Communicating) 38
Heating Operation with (Modulating Communicating) 38
Heat Anticipator Setting 38
Condensate Drain Trap Priming 38
Furnace Operation 38
Gas Supply Pressure Measurement 39
Gas Manifold Pressure Measurement 40
Gas Input Rate Measurement (Natural Gas Only) 40
Temperature Rise 41
Circulator Blower Speeds 41
Blower Heat Off Delay Timings 43
ComfortNet™ System 43

TABLE OF CONTENTS

- **Overview** **43**
- **Airflow Considerations** **43**
- **Fossil Fuel Applications** **44**
- **CTK0* Wiring** **44**
- **ComfortNet™ System Advanced Features** **45**

DIP Switches 46
- **Network troubleshooting** **47**
- **System Troubleshooting** **47**
- **Fault Recall Sequence** **47**
- **Fault Clear Sequence:** **48**

Normal Sequence of Operation 48
- **Power Up** **48**
- **Heating Mode** **48**
- **Cooling Mode** **49**
- **Fan Only Mode** **49**

Operational Checks 49

Safety Circuit Description 49
- **Furnace Control Board** **49**
- **Primary Limit** **49**
- **Auxiliary Limit** **49**
- **Rollout Limit** **49**
- **Pressure Switches** **49**
- **Flame Sensor** **50**

Troubleshooting 50
- **Electrostatic Discharge (ESD) Precautions** **50**
- **Diagnostic Chart** **50**
- **Resetting From Lockout** **50**

Maintenance 50
- **Annual Inspection** **50**
- **Filters** **50**
- **Burners** **51**
- **Induced Draft and Circulator Blowers** **51**
- **Condensate Trap and Drain System (Qualified Servicer Only)** **51**
- **Flame Sensor (Qualified Servicer Only)** **51**

Before Leaving an Installation 51

Repair and Replacement Parts 51

Troubleshooting Codes 52

Wiring Diagram 58
- **Special Instructions for Products Installed in the State of Massachusetts** **59**

WARNING

DAIKIN WILL NOT BE RESPONSIBLE FOR ANY INJURY OR PROPERTY DAMAGE ARISING FROM IMPROPER SERVICE OR SERVICE PROCEDURES. IF YOU INSTALL OR PERFORM SERVICE ON THIS UNIT, YOU ASSUME RESPONSIBILITY FOR ANY PERSONAL INJURY OR PROPERTY DAMAGE WHICH MAY RESULT. MANY JURISDICTIONS REQUIRE A LICENSE TO INSTALL OR SERVICE HEATING AND AIR CONDITIONING EQUIPMENT.

SAFETY CONSIDERATIONS

Adhere to the following warnings and cautions when installing, adjusting, altering, servicing, or operating the furnace. To ensure proper installation and operation, thoroughly read this manual for specifics pertaining to the installation and application of this product.

This furnace is manufactured for use with natural gas. It may be field converted to operate on L.P. gas by using the appropriate L.P. conversion kit listed in the **PROPANE GAS/HIGH ALTITUDE INSTALLATIONS section** of this manual

Install this furnace only in a location and position as specified in **LOCATION REQUIREMENTS & CONSIDERATIONS section and INSTALLATION POSITIONS section** of this manual.

Provide adequate combustion and ventilation air to the furnace as specified in **COMBUSTION & VENTILATION AIR REQUIREMENTS section of this manual.**

Combustion products must be discharged to the outdoors. Connect this furnace to an approved vent system only, as specified in **VENT/FLUE PIPE & COMBUSTION AIR PIPE** section of this manual.

Never test for gas leaks with an open flame. Use a commercially available soap solution made specifically for the detection of leaks to check all connections, as specified in **GAS SUPPLY AND PIPING** section of this manual.

Always install a furnace to operate within the furnace's intended temperature-rise range with a duct system which has external static pressure within the allowable range, as specified on the furnace rating plate and **OPERATIONAL CHECKS section** of these instructions.

When a furnace is installed so that supply ducts carry air circulated by the furnace to areas outside the space containing the furnace, the return air shall also be handled by duct(s) sealed to the furnace casing and terminating outside the space containing the furnace.

A gas-fired furnace for installation in a residential garage must be installed as specified in the **LOCATION REQUIREMENTS AND CONSIDERATIONS section** of this manual.

This furnace may be used as a construction site heater only if certain conditions are met. These conditions are listed in the **PRODUCT APPLICATION section** of this manual.

WARNING

TO PREVENT PERSONAL INJURY OR DEATH DUE TO IMPROPER INSTALLATION, ADJUSTMENT, ALTERATION, SERVICE OR MAINTENANCE, REFER TO THIS MANUAL. FOR ADDITIONAL ASSISTANCE OR INFORMATION, CONSULT A QUALIFIED INSTALLER, SERVICER AGENCY OR THE GAS SUPPLIER.

WARNING

IF THE INFORMATION IN THESE INSTRUCTIONS IS NOT FOLLOWED EXACTLY, A FIRE OR EXPLOSION MAY RESULT CAUSING PROPERTY DAMAGE, PERSONAL INJURY OR LOSS OF LIFE.

— DO NOT STORE OR USE GASOLINE OR OTHER FLAMMABLE VAPORS AND LIQUIDS IN THE VICINITY OF THIS OR ANY OTHER APPLIANCE.

— **WHAT TO DO IF YOU SMELL GAS:**

- DO NOT TRY TO LIGHT ANY APPLIANCE.
- DO NOT TOUCH ANY ELECTRICAL SWITCH; DO NOT USE ANY PHONE IN YOUR BUILDING.
- IMMEDIATELY CALL YOUR GAS SUPPLIER FROM A NEIGHBOR'S PHONE. FOLLOW THE GAS SUPPLIER'S INSTRUCTIONS.
- IF YOU CANNOT REACH YOUR GAS SUPPLIER, CALL THE FIRE DEPARTMENT.

— INSTALLATION AND SERVICE MUST BE PERFORMED BY A QUALIFIED INSTALLER, SERVICE AGENCY OR THE GAS SUPPLIER.

WARNING

THIS PRODUCT CONTAINS OR PRODUCES A CHEMICAL OR CHEMICALS WHICH MAY CAUSE SERIOUS ILLNESS OR DEATH AND WHICH ARE KNOWN TO THE STATE OF CALIFORNIA TO CAUSE CANCER, BIRTH DEFECTS OR OTHER REPRODUCTIVE HARM.

WARNING

HEATING UNIT SHOULD NOT BE UTILIZED WITHOUT REASONABLE, ROUTINE, INSPECTION, MAINTENANCE AND SUPERVISION. IF THE BUILDING IN WHICH ANY SUCH DEVICE IS LOCATED WILL BE VACANT, CARE SHOULD BE TAKEN THAT SUCH DEVICE IS ROUTINELY INSPECTED, MAINTAINED AND MONITORED. IN THE EVENT THAT THE BUILDING MAYBE EXPOSED TO FREEZING TEMPERATURES AND WILL BE VACANT, ALL WATER-BEARING PIPES SHOULD BE DRAINED, THE BUILDING SHOULD BE PROPERLY WINTERIZED, AND THE WATER SOURCE CLOSED. IN THE EVENT THAT THE BUILDING MAY BE EXPOSED TO FREEZING TEMPERATURES AND WILL BE VACANT, ANY HYDRONIC COIL UNITS SHOULD BE DRAINED AS WELL AND, IN SUCH CASE, ALTERNATIVE HEAT SOURCES SHOULD BE UTILIZED.

WARNING

TO PREVENT POSSIBLE PROPERTY DAMAGE, PERSONAL INJURY OR DEATH DUE TO ELECTRICAL SHOCK, THE FURNACE MUST BE LOCATED TO PROTECT THE ELECTRICAL COMPONENTS FROM WATER.

DANGER
PELIGRO

CARBON MONOXIDE POISONING HAZARD

Special Warning for Installation of Furnace or Air Handling Units in Enclosed Areas such as Garages, Utility Rooms or Parking Areas

Carbon monoxide producing devices (such as an automobile, space heater, gas water heater, etc.) should not be operated in enclosed areas such as unventilated garages, utility rooms or parking areas because of the danger of carbon monoxide (CO) poisoning resulting from the exhaust emissions. If a furnace or air handler is installed in an enclosed area such as a garage, utility room or parking area and a carbon monoxide producing device is operated therein, there must be adequate, direct outside ventilation.

This ventilation is necessary to avoid the danger of CO poisoning which can occur if a carbon monoxide producing device continues to operate in the enclosed area. Carbon monoxide emissions can be (re)circulated throughout the structure if the furnace or air handler is operating in any mode.

CO can cause serious illness including permanent brain damage or death.

B10259-216

WARNING

SHOULD OVERHEATING OCCUR OR THE GAS SUPPLY FAIL TO SHUT OFF, TURN OFF THE MANUAL GAS SHUTOFF VALVE EXTERNAL TO THE FURNACE BEFORE TURNING OFF THE ELECTRICAL SUPPLY.

WARNING

POSSIBLE PROPERTY DAMAGE, PERSONAL INJURY OR DEATH DUE TO FIRE, EXPLOSION, SMOKE, SOOT, CONDENSATION, ELECTRICAL SHOCK OR CARBON MONOXIDE MAY RESULT FROM IMPROPER INSTALLATION, REPAIR OPERATION, OR MAINTENANCE OF THIS PRODUCT.

SHIPPING INSPECTION

All units are securely packed in shipping containers tested according to International Safe Transit Association specifications. The carton must be checked upon arrival for external damage. If damage is found, a request for inspection by carrier's agent must be made in writing immediately.

The furnace must be carefully inspected on arrival for damage and bolts or screws which may have come loose in transit. In the event of damage the consignee should:

1. Make a notation on delivery receipt of any visible damage to shipment or container.
2. Notify carrier promptly and request an inspection.
3. With concealed damage, carrier must be notified as soon as possible - preferably within five days.
4. File the claim with the following support documents within a nine month statute of limitations.
   - Original or certified copy of the Bill of Lading, or indemnity bond.
   - Original paid freight bill or indemnity in lieu thereof.
   - Original or certified copy of the invoice, showing trade and other discounts or reductions.
   - Copy of the inspection report issued by carrier's representative at the time damage is reported to carrier.

The carrier is responsible for making prompt inspection of damage and for a thorough investigation of each claim. The distributor or manufacturer will not accept claims from dealers for transportation damage.

ELECTROSTATIC DISCHARGE (ESD) PRECAUTIONS

NOTE: Discharge body's static electricity before touching unit. An electrostatic discharge can adversely affect electrical components.

Use the following precautions during furnace installation and servicing to protect the integrated control module from damage. By putting the furnace, the control, and the person at the same electrostatic potential, these steps will help avoid exposing the integrated control module to electrostatic discharge. This procedure is applicable to both installed and non-installed (ungrounded) furnaces.

1. Disconnect all power to the furnace. Do not touch the integrated control module or any wire connected to the control prior to discharging your body's electrostatic charge to ground.
2. Firmly touch a clean, unpainted, metal surface of the furnaces near the control. Any tools held in a person's hand during grounding will be discharged.
3. Service integrated control module or connecting wiring following the discharge process in step 2. Use caution not to recharge your body with static electricity; (i.e., do not move or shuffle your feet, do not touch ungrounded objects, etc.). If you come in contact with an ungrounded object, repeat step 2 before touching control or wires.
4. Discharge your body to ground before removing a new control from its container. Follow steps 1 through 3 if installing the control on a furnace. Return any old or new controls to their containers before touching any ungrounded object.

TO THE INSTALLER

Before installing this unit, please read this manual thoroughly to familiarize yourself with specific items which must be adhered to, including but not limited to: unit maximum external static pressure, gas pressures, BTU input rating, proper electrical connections, circulating air temperature rise, minimum or maximum CFM, and motor speed connections.

WARNING

TO PREVENT PROPERTY DAMAGE, PERSONAL INJURY OR DEATH DUE TO FIRE, DO NOT INSTALL THIS FURNACE IN A MOBILE HOME, TRAILER, OR RECREATIONAL VEHICLE.

PRODUCT DESCRIPTION

FEATURES

This furnace is a part of the ComfortNet™ family of products. The CTK0* thermostat kit allows this furnace to be installed as part of a digitally communicating system. The ComfortNet system provides automatic airflow configuration, enhanced setup features, and enhanced diagnostics. It also reduces the number of thermostat wires to a maximum of four. It may be also installed as part of a non-communicating system using a standard 24 VAC thermostat.

This product may be installed with the ComfortNet thermostat and a non-ComfortNet compatible single stage air conditioning unit. However, this reduces the benefits of the ComfortNet system as the enhancements will only apply to the furnace.

The modulating furnace operation is based off of negative pressure created by the draft inducer. The furnace control board receives commands from the room thermostat. The furnace control board then controls the RPM of the (3 phase) inducer by varying the frequency and voltage to the inducer. This is known as variable frequency drive (VFD). The inducer, pressure switches, and gas valve are linked by pneumatic tubing. The gas valve modulates based on this negative pressure.

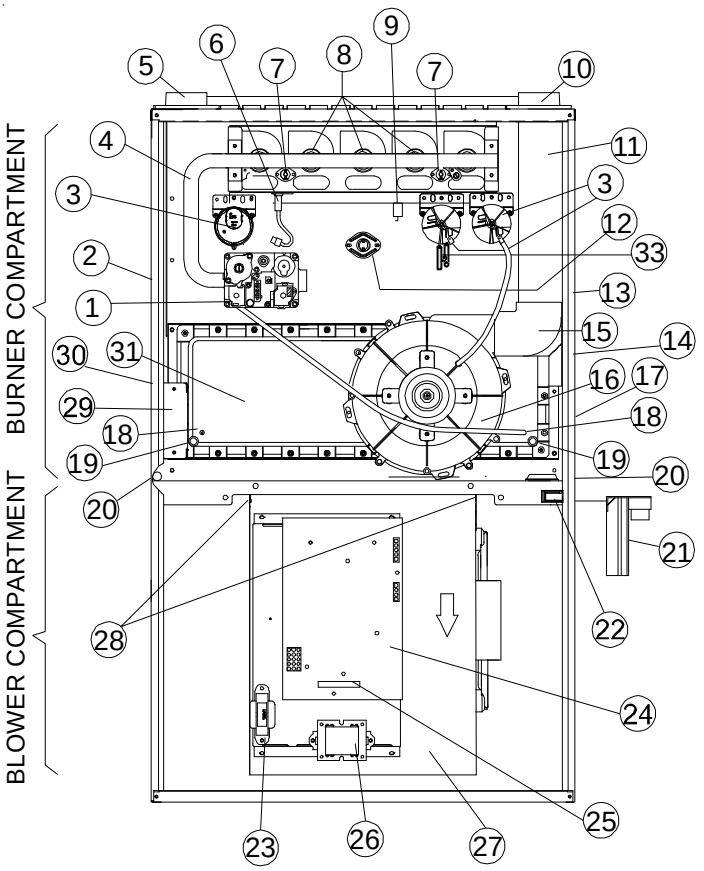

UPFLOW/HORIZONTAL

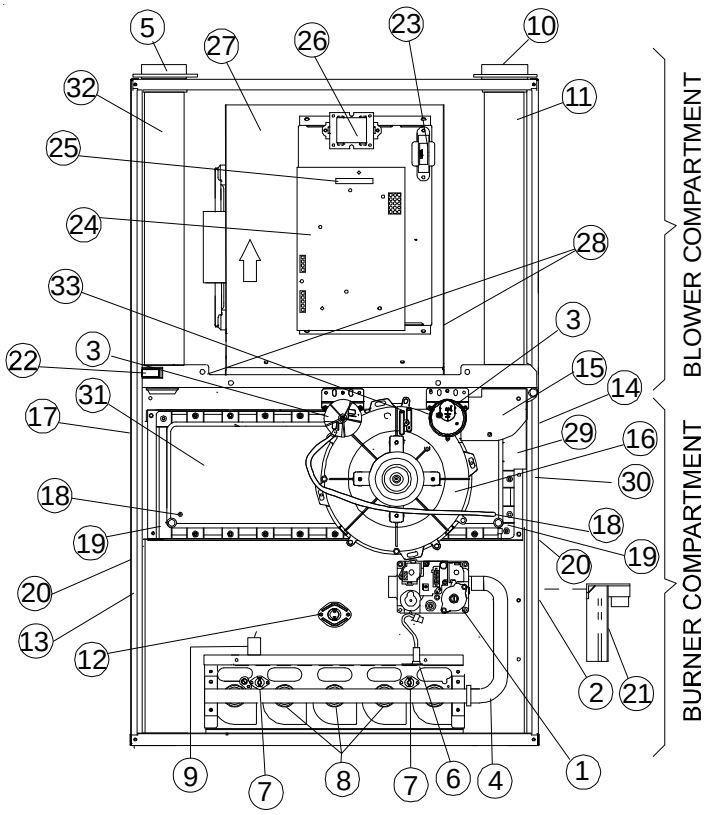

COUNTERFLOW/HORIZONTAL

1 Gas Valve
2 Gas Line Entrance (Alternate)
3 Pressure Switch(es)
4 Gas Manifold
5 Combustion Air Intake Connection
6 Hot Surface Igniter
7 Rollout Limit
8 Burners
9 Flame Sensor
10 Flue Pipe Connection
11 Flue Pipe
12 Primary Limit
13 Gas Line Entrance
14 Flue Pipe Connection (Alternate)
15 Rubber Elbow
16 Variable-Speed Induced Draft Blower
17 Electrical Connection Inlets (Alternate)
18 Coil Front Cover Pressure Tap
19 Coil Front Cover Drain Port
20 Drain Line Penetrations
21 Drain Trap
22 Blower Door Interlock Switch
23 Inductor (Not All Models)
24 Two-Stage Integrated Control Module (with fuse and diagnostic LED)
25 24 Volt Thermostat Connections
26 Transformer (40 VA)
27 ECM Variable Speed Circulator Blower
28 Auxiliary Limit
29 Junction Box
30 Electrical Connection Inlets
31 Coil Front Cover
32 Combustion Air Inlet Pipe (DC96MC only)
33 "H" Fitting

PRODUCT APPLICATION

This furnace is primarily designed for residential home-heating applications. It is NOT designed or certified for use in mobile homes, trailers or recreational vehicles. Neither is it designed or certified for outdoor applications. The furnace **must** be installed indoors (i.e., attic space, crawl space, or garage area provided the garage area is enclosed with an operating door).

This furnace can be used in the following non-industrial commercial applications:

Schools, Office buildings, Churches, Retail stores, Nursing homes, Hotels/motels, Common or office areas

In such applications, the furnace must be installed with the following stipulations:

- It must be installed per the installation instructions provided and per local and national codes.
- It must be installed indoors in a building constructed on site.
- It must be part of a ducted system and not used in a free air delivery application.
- It must not be used as a “make-up” air unit.
- It must be installed as a two-pipe system.
- All other warranty exclusions and restrictions apply This furnace is an ETL dual-certified appliance and is appropriate for use with natural or propane gas (**NOTE:** If using propane, a propane conversion kit is required).

Dual certification means that the combustion air inlet pipe is OPTIONAL and the furnace can be vented as a:

Non-direct vent (single pipe) central forced air furnace in which combustion air is taken from the installation area or from air ducted from the outside or,

Direct vent (dual pipe) central forced air furnace in which all combustion air supplied directly to the furnace burners through a special air intake system outlined in these instructions.

This furnace may be used as a construction site heater **ONLY** if all of the following conditions are met:

- The vent system is permanently installed per these installation instructions.
- A room thermostat is used to control the furnace. Fixed jumpers that provide continuous heating CANNOT be used and can cause long term equipment damage.
- Return air ducts are provided and sealed to the furnace.
- A return air temperature range between 60ºF (16ºC) and 80ºF (27ºC) is maintained.
- Air filters are installed in the system and maintained during construction replaced as appropriate during construction, and upon completion of construction.
- The input rate and temperature rise are set per the furnace rating plate.
- 100% outside air is provided for combustion air requirements during construction. Temporary ducting can be used.

  NOTE: Do not connect the temporary duct directly to the furnace. The duct must be sized for adequate combustion and ventilation in accordance with the latest edition of the National Fuel Gas Code NFPA 54/ANSI Z223.1 or CAN/CSA B149.1 Installation Codes.
- The furnace heat exchanger, components, duct system, air filters and evaporator coils are thoroughly cleaned following final construction clean up.
- All furnace operating conditions (including ignition, input rate, temperature rise and venting) are verified according to these installation instructions.

NOTE: The Commonwealth of Massachusetts requires that the following additional requirements must also be met:

- Gas furnaces must be installed by a licensed plumber or gas fitter.
- A T-handle gas cock must be used.
- If the unit is to be installed in an attic, the passageway to and the service area around the unit must have flooring.

To ensure proper furnace operation, install, operate and maintain the furnace in accordance with these installation and operation instructions, all local building codes and ordinances. In their absence, follow the latest edition of the National Fuel Gas Code (NFPA 54/ANSI Z223.1), and/or CAN/CSA

B149.1 Installation Codes, local plumbing or waste water codes, and other applicable codes.

A copy of the National Fuel Gas Code (NFPA 54/ANSI Z223.1) can be obtained from any of the following:

American National Standards Institute
1430 Broadway
New York, NY 10018

National Fire Protection Association
1 Batterymarch Park
Quincy, MA 02269

CSA International
8501 East Pleasant Valley
Cleveland, OH 44131

The rated heating capacity of the furnace should be greater than or equal to the total heat loss of the area to be heated. The total heat loss should be calculated by an approved method or in accordance with "ASHRAE Guide" or "Manual J-Load Calculations" published by the Air Conditioning Contractors of America.

A copy of the CAN/CSA B149.1 Installation Codes can also be obtained from:

CSA International
178 Rexdale Boulevard
Etobicoke, Ontario, Canada M9W 1R3

Location Requirements & Considerations

Follow the instructions listed below and the guidelines provided in the *Combustion and Ventilation Air Requirements* section when selecting a furnace location.

WARNING

To prevent possible equipment damage, property damage, personal injury or death, the following bullet points must be observed when installing this unit.

WARNING

Possible property damage, personal injury or death due to fire, explosion, smoke, soot, condensation, electrical shock or carbon monoxide may result from improper installation, repair operation, or maintenance of this product.

- Centrally locate the furnace with respect to the proposed or existing air distribution system.
- Ensure the temperature of the return air entering the furnace is between 55°F and 100°F when the furnace is heating.
- Provide provisions for venting combustion products outdoors through a proper venting system. Special consideration should be given to vent/flue pipe routing and combustion air intake pipe when applicable. Refer to *Vent/Flue Pipe and Combustion Air Pipe -Termination Locations* for appropriate termination locations and to determine if the piping system from furnace to termination can be accomplished within the guidelines given. **NOTE:** The length of flue and/or combustion air piping can be a limiting factor in the location of the furnace.
- Locate the furnace so condensate flows downwards to the drain. Do not locate the furnace or its condensate drainage system in any area subject to below freezing temperatures without proper freeze protection. Refer to *Condensate Drain Lines and Trap* for further details.
- Ensure adequate combustion air is available for the furnace. Improper or insufficient combustion air can expose building occupants to gas combustion products that could include carbon monoxide. Refer to *Combustion and Ventilation Air Requirements.*
- Set the furnace on a level floor to enable proper condensate drainage. If the floor becomes wet or damp at times, place the furnace above the floor on a concrete base sized approximately 1-1/2" larger than the base of the furnace. Refer to the *Horizontal Applications and Considerations* for leveling of horizontal furnaces.
- Ensure upflow or horizontal furnaces are not installed directly on carpeting, or any other combustible material. The only combustible material allowed is wood.
- A special accessory subbase must be used for upright counterflow unit installations over any combustible material (including wood). Refer to subbase instructions for installation details. (**NOTE:** A subbase will not be required if an air conditioning coil is located beneath the furnace between the supply air opening and the combustible floor.
- Exposure to contaminated combustion air will result in safety and performance-related problems. Do not install the furnace where the combustion air is exposed to the following substances:
  - permanent wave solutions
  - chlorinated waxes or cleaners
  - chlorine-based swimming pool chemicals
  - water softening chemicals
  - deicing salts or chemicals
  - carbon tetrachloride
  - halogen type refrigerants
  - cleaning solutions (such as perchloroethylene)
  - printing inks
  - paint removers
  - varnishes
  - hydrochloric acid
  - cements and glues
  - antistatic fabric softeners for clothes dryers
  - and masonry acid washing materials
- Isolate a non-direct furnace from an area contaminated by any of the above substances. This protects the *non-direct vent* furnace from airborne contaminants. To ensure that the enclosed *non-direct vent* furnace has an adequate supply of combustion air, air must be ducted in from a nearby uncontaminated room or from outdoors. Refer to the *Combustion and Ventilation Air Requirements* for details.

- If the furnace is used in connection with a cooling unit, install the furnace upstream or in parallel with the cooling coil. Premature heat exchanger failure will result if the cooling coil is placed upstream of the furnace.

  For vertical (upflow or downflow) applications, the minimum cooling coil width shall not be less than furnace width minus 1". Additionally, a coil installed above an upflow furnace or under a counterflow furnace may be the same width as the furnace or may be one size larger than the furnace. *Example: a "C" width coil may be installed with a "B" width furnace.*

  For upflow applications, the front of the coil and furnace must face the same direction.
- If the furnace is installed in a residential garage, position the furnace so that the burners and ignition source are located not less than 18 inches (457 mm) above the floor. Protect the furnace from physical damage by vehicles.
- If the furnace is installed horizontally, ensure the access doors are not on the "up/top" or "down/bottom" side of the furnace.
- Do not connect this furnace to a chimney flue that serves a separate appliance designed to burn solid fuel.
- On Counterflow Installations, the air conditioning coil must be downstream on the supply (positive) side of the furnace heat exchanger.
- *Counterflow Installation over a noncombustible floor.* Before setting the furnace over the plenum opening, ensure the surface around the opening is smooth and level. A tight seal should be made between the furnace base and floor by using a silicone rubber caulking compound or cement grout.
- *Counterflow Installation over a combustible floor.* If installation over a combustible floor becomes necessary, use an accessory subbase (see Specification Sheet applicable for your model for details.) A special accessory subbase must be used for upright counterflow unit installations over any combustible material including wood. Refer to subbase instructions for installation details. Follow the instructions with the subbase for proper installation. Do not install the furnace directly on carpeting, tile, or other combustible material other than wood flooring. (**NOTE**: The subbase will not be required if an air conditioning coil is installed between the supply air opening on the furnace and the floor.)

CLEARANCES AND ACCESSIBILITY

DM96MC MINIMUM CLEARANCE TO COMBUSTIBLE MATERIALS (INCHES)						
POSITION	SIDES	REAR	FRONT	BOTTOM	FLUE	TOP
Upflow	0"	0"	3"	C	0"	1"
Horizontal	6"	0"	3"	C	0"	6"

C = If placed on combustible floor, floor MUST be wood only.

NOTES:
- For servicing or cleaning, a 24" front clearance is required.
- Unit connections (electrical, flue and drain) may necessitate greater clearances than the minimum clearances listed above.
- In all cases, accessibility clearance must take precedence over clearances from the enclosure where accessibility clearances are greater.

DC96MC MINIMUM CLEARANCE TO COMBUSTIBLE MATERIALS (INCHES)						
POSITION	SIDES	REAR	FRONT	BOTTOM	FLUE	TOP
Downflow	0"	0"	3"	NC	0"	1"
Horizontal	6"	0"	3"	C	0"	6"

C = If placed on combustible floor, floor MUST be wood only.
NC = For installation on non-combustible floors only. A combustible subbase must be used for installations on combustible flooring.

NOTES:
- For servicing or cleaning, a 24" front clearance is required.
- Unit connections (electrical, flue and drain) may necessitate greater clearances than the minimum clearances listed above.
- In all cases, accessibility clearance must take precedence over clearances from the enclosure where accessibility clearances are greater.

Installations must adhere to the clearances to combustible materials to which this furnace has been design certified. The minimum clearance information for this furnace is provided on the unit's clearance label. These clearances must be permanently maintained. Clearances must also accommodate an installation's gas, electrical, and drain trap and drain line connections. **NOTE:** In addition to the required clearances to combustible materials, a minimum of 24 inches service clearance must be available in front of the unit.

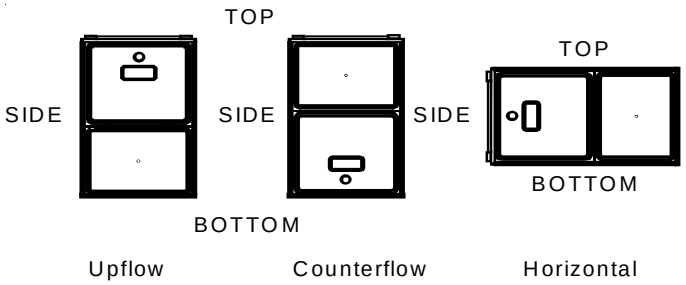

EXISTING FURNACE REMOVAL

NOTE: When an existing furnace is removed from a venting system serving other appliances, the venting system may be too large to properly vent the remaining attached appliances.

The following vent testing procedure is reproduced from the **American National Standard/National Standard of Canada for Gas-Fired Central Furnaces ANSI Z21.4, CSA-2.3 latest edition Section 1.23.1.**

The following steps shall be followed with each appliance connected to the venting system placed in operation, while any other appliances connected to the venting system are not in operation:

1. Seal any unused openings in the venting system;

2. Inspect the venting system for proper size and horizontal pitch, as required by the National Fuel Gas Code, ANSI Z223.1 or the Natural Gas and Propane Installation Code, CSA B149.1-05 and these instructions. Determine that there is no blockage or restriction, leakage, corrosion and other deficiencies which could cause an unsafe condition.

3. As far as practical, close all building doors and windows and all doors between the space in which the appliance(s) connected to the venting system are located and other spaces of the building.

4. Close fireplace dampers.

5. Turn on clothes dryers and any appliance not connected to the venting system. Turn on any exhaust fans, such as range hoods and bathroom exhausts, so they shall operate at maximum speed. Do not operate a summer exhaust fan.

6. Follow the lighting instructions. Place the appliance being inspected in operation. Adjust thermostat so appliance shall operate continuously.

7. Test for spillage from draft hood appliances at the draft hood relief opening after 5 minutes of main burner operation. Use the flame of a match or candle.

8. If improper venting is observed during any of the above tests, the venting system must be corrected in accordance with the National Fuel Gas Code ANSI Z223.1/NFPA 54 and/or National Gas and Propane Installation Code CSA B149.1-05.

9. After it has been determined that each appliance connected to the venting system properly vents when tested as outlined above, return doors, windows, exhaust fans, fireplace dampers and any other gas burning appliance to their previous conditions of use.

If resizing is required on any portion of the venting system, use the appropriate table in Appendix G in the latest edition of the National Fuel Gas Code ANSI Z223.1 and/or CSA B149.1-05 Installation Codes.

Thermostat Location

The thermostat should be placed approximately five feet from the floor on a vibration-free, inside wall in an area having good air circulation. Do not install the thermostat where it may be influenced by any of the following:

- Drafts, or dead spots behind doors, in corners, or under cabinets.
- Hot or cold air from registers.
- Radiant heat from the sun.
- Light fixtures or other appliances.
- Radiant heat from a fireplace.
- Concealed hot or cold water pipes, or chimneys.
- Unconditioned areas behind the thermostat, such as an outside wall.

Consult the instructions packaged with the thermostat for mounting instructions and further precautions.

Combustion & Ventilation Air Requirements

WARNING

To avoid property damage, personal injury or death, sufficient fresh air for proper combustion and ventilation of flue gases must be supplied. Most homes require outside air be supplied into the furnace area.

Improved construction and additional insulation in buildings have reduced heat loss by reducing air infiltration and escape around doors and windows. These changes have helped in reducing heating/cooling costs but have created a problem supplying combustion and ventilation air for gas fired and other fuel burning appliances. Appliances that pull air out of the house (clothes dryers, exhaust fans, fireplaces, etc.) increase the problem by starving appliances of air.

House depressurization can cause back drafting or improper combustion of gas-fired appliances, thereby exposing building occupants to gas combustion products that could include carbon monoxide.

When the furnace is installed as a direct vent (2-pipe system) furnace, no special provisions for air for combustion are required. However, if this furnace is to be installed in the same space with other gas appliances, such as a water heater, ensure there is an adequate supply of combustion and ventilation air for the other appliances. Refer to the latest edition of the National Fuel Gas Code NFPA 54/ANSI Z223.1 or CAN/CSA B149 Installation Codes or applicable provisions of the local building codes for determining the combustion air requirements for the appliances.

Most homes will require outside air be supplied to the furnace area by means of ventilation grilles or ducts connecting directly to the outdoors or spaces open to the outdoors such as attics or crawl spaces.

The following information on air for combustion and ventilation is reproduced from the **National Fuel Gas Code NFPA 54/ANSI Z223.1 Section 9.3.**

9.3* Air for Combustion and Ventilation.

9.3.1 General.

9.3.1.1 Air for combustion, ventilation, and dilution of flue gases for appliances installed in buildings shall be obtained by application of one of the methods covered in 9.3.2 through 9.3.6. Where the requirements of 9.3.2 are not met, outdoor air shall be introduced in accordance with methods covered in 9.3.3 through 9.3.6.

Exception No. 1: This provision shall not apply to direct vent appliances.

9.3.1.2 Appliances of other than natural draft design and other than Category 1 vented appliances shall be provided with combustion, ventilation, and dilution air in accordance with the appliance manufacturer's instructions.

9.3.1.3 Appliances shall be located so as not to interfere with proper circulation of combustion, ventilation, and dilution air.

9.3.1.4 Where used, a draft hood or a barometric draft regulator shall be installed in the same room or enclosure as the appliance served so as to prevent any difference in pressure between the hood or regulator and the combustion air supply.

9.3.1.5 Makeup air requirements for the operation of exhaust fans, kitchen ventilation systems, clothes dryers, and fireplaces shall be considered in determining the adequacy of a space to provide combustion air requirements.

9.3.2 Indoor Combustion Air. The required volume of indoor air shall be determined in accordance with the method in 9.3.2.1 or 9.3.2.2 except that where the air infiltration rate is known to be less than 0.40 *ACH*, the method in 9.3.2.2 shall be used. The total required volume shall be the sum of the required volume calculated for all appliances located within the space. Rooms communicating directly with the space in which the appliances are installed through openings not furnished with doors, and through combustion air openings sized and located in accordance with 9.3.2.3, are considered a part of the required volume.

9.3.2.1* Standard Method. The minimum required volume shall be 50 ft^3 per 1,000/Btu/hour (4.8m^3/kW).

9.3.2.2* Known Air Infiltration Rate Method. Where the air infiltration rate of a structure is known, the minimum required volume shall be determined as follows:

(1) For appliances other than fan-assisted, calculate using the following equation:

$$\text{Required Volume}_{other} \geq \frac{21\ \text{ft}^3}{ACH} \quad \frac{I_{other}}{1000\ \text{Btu/hr}}$$

(2) For fan-assisted appliances, calculate using the following equation:

$$\text{Required Volume}_{fan} \geq \frac{15\ \text{ft}^3}{ACH} \quad \frac{I_{fan}}{1000\ \text{Btu/hr}}$$

where:

I_{other} = all appliances other than fan-assisted input in Btu per hour

I_{fan} = fan-assisted appliances input in Btu per hour

ACH = air change per hour (percent of volume of space exchanged per hour, expressed as a decimal)

(3) For purposes of this calculation, an infiltration rate greater than 0.60 *ACH* shall not be used in the equations in 9.3.2.2(1) and 9.3.2.2(2).

9.3.2.3 Indoor Opening Size and Location. Openings used to connect indoor spaces shall be sized and located in accordance with the following:

(1)* *Combining spaces on the same story.* Each opening shall have a minimum free area of 1 in.^{2}/1000Btu/hr (2200 mm^2/kW) of the total input rating of all appliances in the space but not less than 100 in.^{2} (0.60m^2). One opening shall commence within 12 in. (300 mm) of the top, and one opening shall commence within 12 in. (300 mm) of the bottom, of the enclosure *[see Figure A.9.3.2.3(1)]*. The minimum dimension of air openings shall be not less than 3 in. (80 mm).

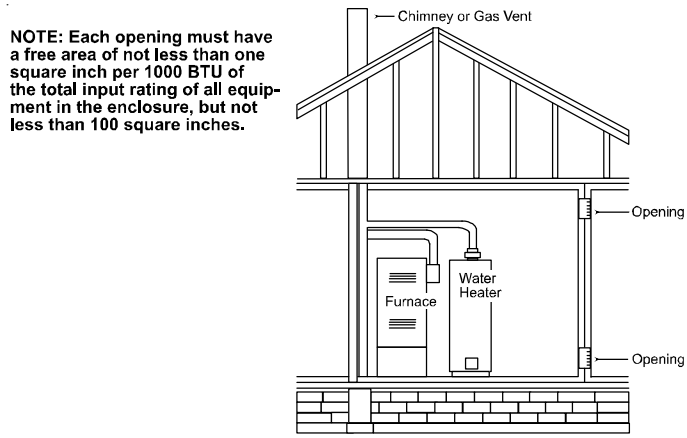

Figure A.9.2.3.3.(1) All Combustion Air from Adjacent Indoor Spaces through Indoor Combustion Air Openings.

(2) *Combining spaces in different stories*. The volumes of spaces in different stories shall be considered as communicating spaces where such spaces are connected by one or more openings in doors or floors having a total minimum free area of 2 in.^{2}/1000 Btu/hr (4400 mm^2/kW) of total input rating of all appliances.

9.3.3 Outdoor Combustion Air. Outdoor combustion air shall be provided through opening(s) to the outdoors in accordance with the methods in 9.3.3.1 or 9.3.3.2. The minimum dimension of air openings shall not be less than 3 in. (80 mm).

9.3.3.1 Two Permanent Openings Method. Two permanent openings, one commencing within 12 in. (300 mm) of the top and one commencing within 12 in. (300 mm) of the bottom, of the enclosure shall be provided. The openings shall communicate directly, or by ducts, with the outdoors or spaces that freely communicate with the outdoors, as follows:

(1)* Where directly communicating with the outdoors or where communicating to the outdoors through vertical ducts, each opening shall have a minimum free area of 1 in.^{2}/4000 Btu/hr (550 min^2/kW) of total input rating of all appliances in the enclosure. *[See Figure A.9.3.3.1(1)(a) and Figure A.9.3.3.1(1)(b).]*

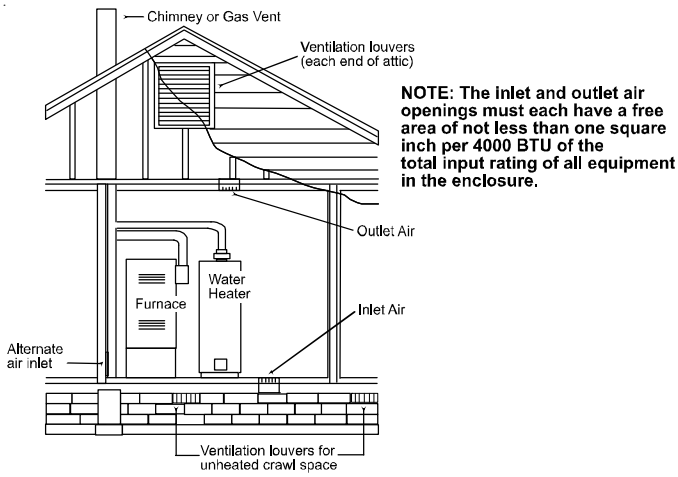

Figure A.9.3.3.1(1)(a) All Combustion Air From Outdoors - Inlet Air from Ventilated Crawl Space and Outlet Air to Ventilated Attic.

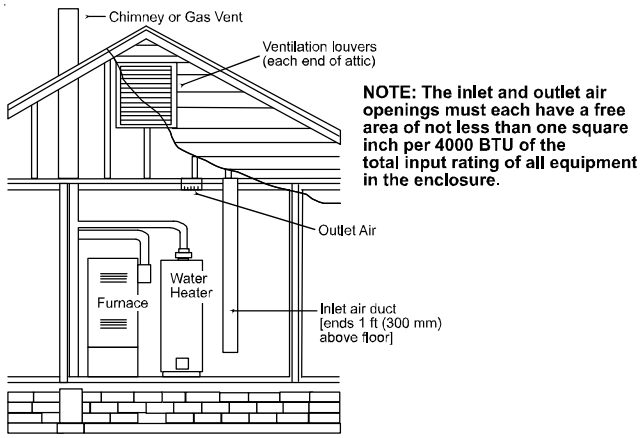

Figure A.9.3.3.1(1)(b) All Combustion Air From Outdoors through Ventilated Attic.

(2)* Where communicating with the outdoors through horizontal ducts, each opening shall have a minimum free area of 1 in.^{2}/2000 Btu/hr (1100 min^2/kW) of total input rating of all appliances in the enclosure. *[See Figure A.9.3.3.1(2).]*

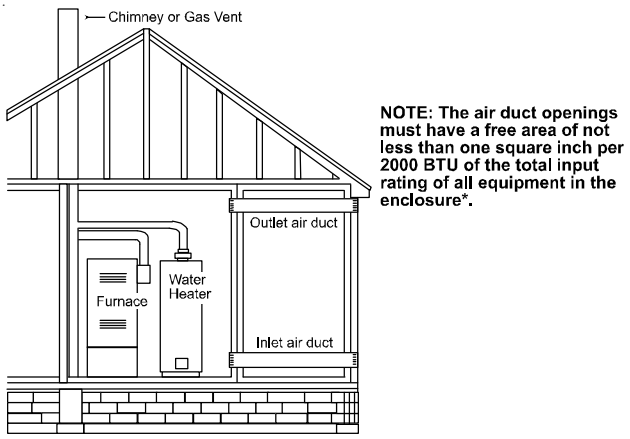

Figure A.9.3.3.1(2) All Combustion Air From Outdoors through Horizontal Ducts.

9.3.3.2* One Permanent Opening Method. One permanent openings, commencing within 12 in. (300 mm) of the top of the enclosure, shall be provided. The appliance shall have clearances of at least 1 in. (25 mm) from the sides and back and 6 in. (150 mm) from the front of the appliance. The opening shall directly communicate with the outdoors or shall communicate through a vertical or horizontal duct to the outdoors or spaces that freely communicate with the outdoors *(see Figure A.9.3.3.2)* and shall have a minimum free area of the following:

(1) 1 in.^{2}/3000 Btu/hr (700 mm^2 per kW) of the total input rating of all appliances located in the enclosure, and
(2) Not less than the sum of the areas of all vent connectors in the space.

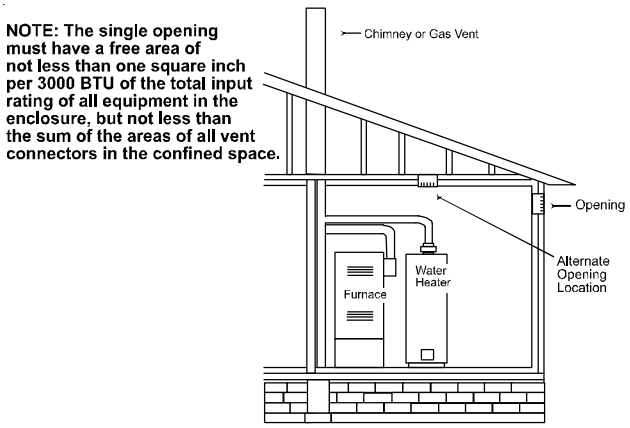

Figure A.9.3.3.2 All Combustion Air From Outdoors through Single Combustion Air Opening.

9.3.4 Combination Indoor and Outdoor Combustion Air. The use of a combination of indoor and outdoor combustion air shall be in accordance with (1) through (3) *(see example calculation in Annex J]:*

(1) *Indoor Openings:* Where used, openings connecting the interior spaces shall comply with 9.3.2.3.
(2) *Outdoor Opening(s) Location.* Outdoor opening(s) shall be located in accordance with 9.3.3.
(3) *Outdoor Opening(s) Size.* The outdoor opening(s) size shall be calculated in accordance with the following:
    (a) The ratio of the interior spaces shall be the available volume of all communicating spaces divided by the required volume.
    (b) The outdoor size reduction factor shall be 1 minus the ratio of interior spaces.

(c) The minimum size of outdoor opening(s) shall be the full size of outdoor opening(s) calculated in accordance with 9.3.3, multiplied by the reduction factor. The minimum dimension of air openings shall not be less than 3 in. (80 mm).

9.3.5 Engineered Installations. Engineered combustion air installations shall provide an adequate supply of combustion, ventilation, and dilution air and shall be approved by the authority having jurisdiction.

9.3.6 Mechanical Combustion Air Supply. Where all combustion air is provided by a mechanical air supply system, the combustion air shall be supplied form outdoors at the minimum rate of 0.35 ft^3/min per 1000 Btu/hr (0.034 m^3/min per kW) for all appliances located within the space.

9.3.6.1 Where exhaust fans are installed, additional air shall be provided to replace the exhausted air.

9.3.6.2 Each of the appliances served shall be interlocked to the mechanical air supply system to prevent main burner operation where the mechanical air supply system is not in operation.

9.3.6.3 Where combustion air is provided by the building's mechanical ventilation system, the system shall provide the specified combustion air rate in addition to the required ventilation air.

9.3.7 Louvers, Grilles, and Screens.

9.3.7.1 Louvers and Grilles. The required size of openings for combustion, ventilation, and dilution air shall be based on the net free area of each opening. Where the free area through a design of louver or grille or screen is known, it shall be used in calculating the size opening required to provide the free area specified. Where the louver and grille design and free area are not known, it shall be assumed that wood louvers will have 25 percent free area, and metal louvers and grilles will have 75 percent free area. Nonmotorized louvers and grilles shall be fixed in the open position.

9.3.7.2 Minimum Scree Mesh Size. Screens shall not be smaller than 1/4 in. mesh.

9.3.7.3 Motorized Louvers. Motorized louvers shall be interlocked with the appliance so they are proven in the full open position prior to main burner ignition and during main burner operation. Means shall be provided to prevent the main burner form igniting should the louver fail to open during burner startup and to shut down the main burner if the louvers close during burner operation.

9.3.8 Combustion Air Ducts. Combustion air ducts shall comply with 9.3.8.1 through 9.3.8.8.

9.3.8.1 Ducts shall be constructed of galvanized steel or a material having equivalent corrosion resistance, strength, and rigidity.

Exception: Within dwellings units, unobstructed stud and joist spaces shall not be prohibited from conveying combustion air, provided that not more than one fireblock is removed.

9.3.8.2 Ducts shall terminate in an unobstructed space, allowing free movement of combustion air to the appliances.

9.3.8.3 Ducts shall serve a single space.

9.3.8.4 Ducts shall not serve both upper and lower combustion air openings where both such openings are used. The separation between ducts servicing upper and lower combustion air openings shall be maintained to the source of combustion air.

9.3.8.5 Ducts shall not be screened where terminating in an attic space.

9.3.8.6 Horizontal upper combustion air ducts shall not slope downward toward the source of combustion air.

9.3.8.7 The remaining space surrounding a chimney liner, gas vent, special gas vent, or plastic piping installed within a masonry, metal, or factory built chimney shall not be used to supply combustion air.

Exception: Direct vent appliances designed for installation in a solid fuel-burning fireplace where installed in accordance with the manufacture's installation instructions.

9.3.8.8 Combustion air intake openings located on the exterior of the building shall have the lowest side of the combustion air intake openings located at least 12 in. (300 mm) vertically from the adjoining grade level.

INSTALLATION POSITIONS

DM96MC models may be installed upflow or horizontally with left or right side down. DC96MC models may be installed downflow or horizontally with left or right side down.

Do not install this furnace on its back. For *upright upflow* furnaces, return air ductwork may be attached to the side panel(s) and/or basepan. For *horizontal upflow* furnaces, return air ductwork must be attached to the basepan. For both *upright or horizontal counterflow* furnaces, return ductwork must be attached to the basepan (top end of the blower compartment). **NOTE:** Ductwork must never be attached to the back of the furnace. Refer to "Recommended Installation Positions" figure for appropriate installation positions, ductwork connections, and resulting airflow arrangements.

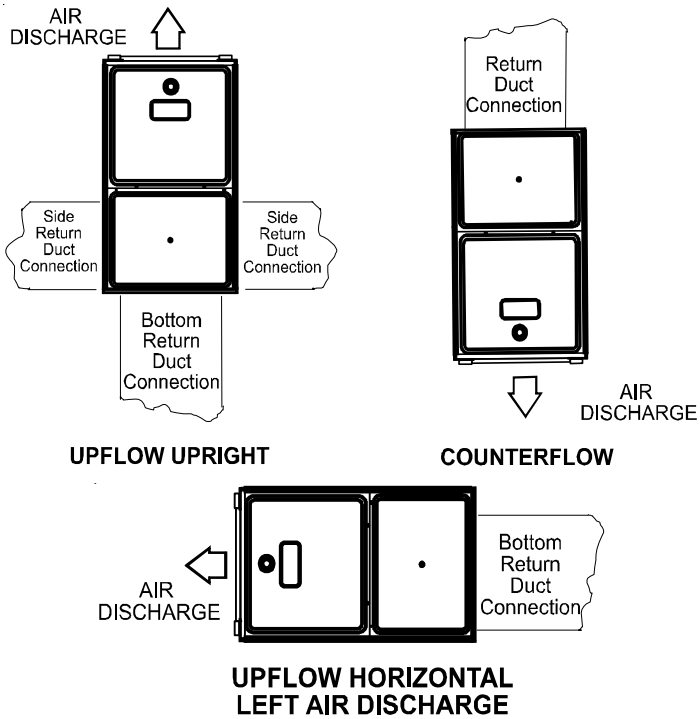

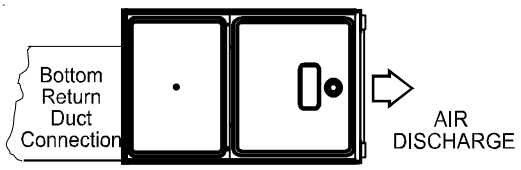

UPFLOW HORIZONTAL
RIGHT AIR DISCHARGE

Recommended Installation Positions

Horizontal Applications & Considerations

When installing a furnace horizontally, additional consideration must be given to the following:

Furnace Suspension

If suspending the furnace from rafters or joists, use 3/8" threaded rod and 2"x2"x1/8" angle iron as shown in the following diagram. The length of rod will depend on the application and the clearances necessary.

If the furnace is installed in a crawl space it must be suspended from the floor joist or supported by a concrete pad. Never install the furnace on the ground or allow it to be exposed to water.

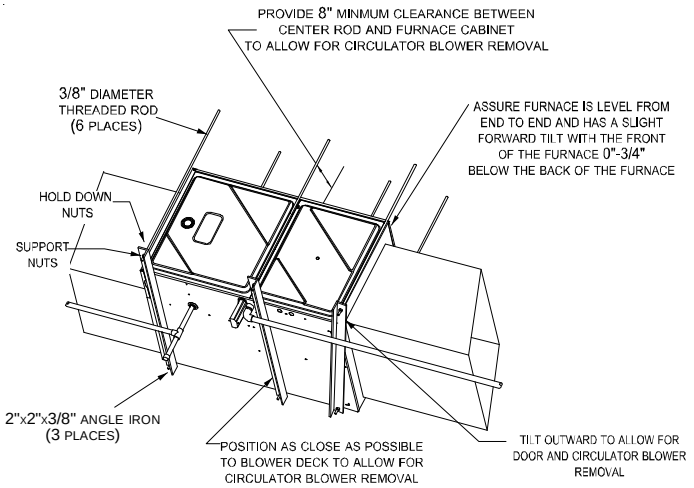

Drain Trap and Lines

In horizontal applications the condensate drain trap is secured to the furnace side panel, suspending it below the furnace. A minimum clearance of 4 3/4 inches below the furnace must be provided for the drain trap. Additionally, the appropriate downward piping slope must be maintained from the drain trap to the drain location. Refer to *Condensate Drain Trap and Lines* for further details. If the drain trap and drain line will be exposed to temperatures near or below freezing, adequate measures must be taken to prevent condensate from freezing.

Leveling

Leveling ensures proper condensate drainage from the heat exchanger and induced draft blower. For proper flue pipe drainage, the furnace must be level lengthwise from end to end. The furnace should also be level from back to front or have a slight tilt with the access doors downhill (approximately 3/4 inches) from the back panel. The slight tilt allows the heat exchanger condensate, generated in the recuperator coil, to flow forward to the recuperator coil front cover.

Alternate Electrical and Gas Line Connections

This furnace has provisions allowing for electrical and gas line connections through either side panel. In horizontal applications the connections can be made either through the "top" or "bottom" of the furnace.

Drain Pan

A drain pan must be provided if the furnace is installed above a conditioned area. The drain pan must cover the entire area under the furnace (and air conditioning coil if applicable).

Freeze Protection

Refer to *Horizontal Applications and Conditions - Drain Trap and Lines.*

Propane Gas/High Altitude Installations

⚠ WARNING

Possible property damage, personal injury or death may occur if the correct conversion kits are not installed. The appropriate kits must be applied to ensure safe and proper furnace operation. All conversions must be performed by a qualified installer or service agency.

This furnace is shipped from the factory configured for natural gas up to 10,000 ft. altitude. Propane conversions require the proper LP kit to compensate for the energy content difference between natural and propane gas.

LP kits include a manifold assembly, including an LP gas valve, orifices and LP burners.

Gas	Altitude	Kit	Orifice	Manifold Pressure		Pressure Switch Change
				High Stage	Low Stage (50% firing rate)	
Natural	0-10,000	None	#45[1]	3.5" w.c.	1" w.c.	None
Propane		LPKMOD*****	1.25MM[2]	10.0" w.c.	2.6" w.c.	None

NOTE: In Canada, gas furnaces are only certified to 4500 feet.
[1] Except 115,000 BTU: #43
[2] Except 115,000 BTU: #55

For furnaces being converted to LP gas, it is strongly recommended that a LPLP03 kit also be installed. The use of this kit will prevent the furnace from firing when the LP gas supply pressure is too low to support proper combustion.

Furnace Model	LP Kit
DM96MC0603BX	LPKMOD060UF
DM96MC0805CX	LPKMOD080UF
DM96MC1005DX	LPKMOD100UF
DM96MC1155DX	LPKMOD115UF
DC96MC0604CX	LPKMOD060CF
DC96MC0805DX	LPKMOD080CF
DC96MC1005DX	LPKMOD100CF

The indicated kits must be used to insure safe and proper furnace operation. All conversions must be performed by a qualified installer, or service agency.

Vent/Flue Pipe & Combustion Air Pipe

WARNING

Failure to follow these instructions can result in bodily injury or death. Carefully read and follow all instructions given in this section.

WARNING

Upon completion of the furnace installation, carefully inspect the entire flue system both inside and outside of the furnace to assure it is properly sealed. Leaks in the flue system can result in serious personal injury or death due to exposure to flue products, including carbon monoxide.

A condensing gas furnace achieves its high level of efficiency by extracting almost all of the heat from the products of combustion and cooling them to the point where condensation takes place. Because of the relatively low flue gas temperature and water condensation requirements, PVC or ABS pipe is used as venting material.

In addition to PVC and ABS pipe and fittings, Innoflue® by Centrotherm Eco Systems and PolyPro® by M&G Duravent are also approved vent and combustion air materials for installations in the U.S.A. and Canada. Manufacturers Installation instructions for these products must be followed. These products have specific instructions for installing, joining and terminating. Do not mix materials or components of one manufacturer with materials or components of another manufacturer.

All furnaces are built with 2" vent / intake pipe and connectors. For furnaces requiring installation of 3" pipe, the transition from 2" to 3" should be done as close to the furnace as practically possible.

This furnace must not be connected to Type B, BW, or L vent or vent connector, and must not be vented into any portion of a factory built or masonry chimney except when used as a pathway for PVC as described later in this section. Never common vent this appliance with another appliance or use a vent which is used by a solid fuel appliance.

It is the responsibility of the installer to follow the manufacturers' recommendations and to verify that all vent/flue piping and connectors are compatible with furnace flue products. Additionally, it is the responsibility of the installer to ensure that all piping and connections possess adequate structural integrity and support to prevent flue pipe separation, shifting, or sagging during furnace operation.

Dual Certification: Non-Direct/Direct Vent

This furnace is dual certified and may be installed as a non-direct vent (single pipe) or direct vent (dual pipe) appliance. A *non-direct vent* installation requires only a vent/flue pipe, while a *direct vent* installation requires both a vent/flue pipe and a combustion air intake pipe. Refer to the appropriate section for details concerning piping size, length, number of elbows, furnace connections, and terminations.

WARNING

To avoid bodily injury, fire or explosion, solvent cements must be kept away from all ignition sources (i.e., sparks, open flames, and excessive heat) as they are combustible liquids. Avoid breathing cement vapors or contact with skin and/or eyes.

Materials and Joining Methods

Two- or three-inch nominal diameter PVC Schedule 40 pipe meeting ASTM D1785, PVC primer meeting ASTM F656, and PVC solvent cement meeting ASTM D2564 specifications must be used. Fittings must be DWV type fittings meeting ASTM D2665 and ASTM D3311. Carefully follow the pipe manufacturer's instructions for cutting, cleaning, and solvent cementing of PVC.

The use of Schedule 40 PVC or ABS cellular core (Foam Core) plastic pipe is also acceptable as a flue/vent and intake pipe material. PVC primer meeting ASTM F656 and PVC solvent cement meeting ASTM D2564 specifications must be used. Fittings must be DWV type fittings meeting ASTM D2665 and ASTM D3311. Carefully follow the manufactures instructions for cutting, cleaning and solvent cementing of PVC.

For Canadian installations; all PVC pipe, fittings and joining materials must be UL S636 listed.

As an alternative to PVC pipe, primer, solvent cement, and fittings, ABS materials which are in compliance with the following specifications may be used: Two-or-three-inch solid wall ABS Schedule 40 pipe must meet ASTM D1527 and, if used in Canada, must be CSA listed or, two-or-three-inch cellular core ABS Schedule 40 pipe must meet ASTM F628 and, if used in Canada, must be CSA listed. Solvent cement for ABS to ABS joints must meet ASTM D2235 and, if used in Canada, must be CSA listed. The solvent cement for the PVC to ABS transition joint must meet ASTM D3138. Fittings must be DWV type fittings meeting ASTM D2661 and ASTM D3311 and, if used in Canada, must be CSA listed. Carefully follow the manufacturers' instructions for cutting, cleaning, and solvent cementing PVC and/or ABS.

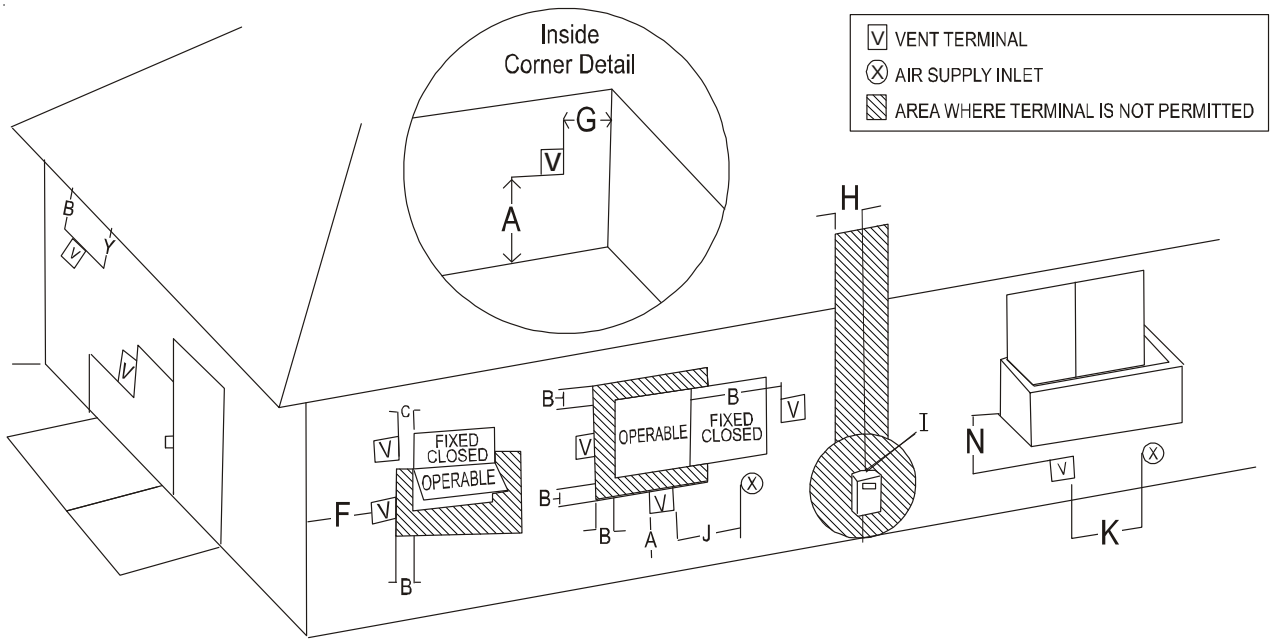

DIRECT VENT TERMINAL CLEARANCES

	Canadian Installations [1]	U.S. Installations [2]
A= Clearance above grade, veranda, porch, deck or balcony. (See 1.24.6-i(9)b.)	12 in. (30 cm)	12 in. (30 cm)
B= Clearance to window or door that may be opened.	6 in. (15 cm) for appliances 10,000 Btuh (3 kW), 12 in. (30 cm) for appliances > 10,000 Btuh (3 kW) and 100,000 Btuh (30 kW), 36 in. (91 cm) for appliances > 100,000 Btuh (30 kW).	6 in. (15 cm) for appliances 10,000 Btuh (3 kW), 9 in. (23 cm) for appliances > 10,000 Btuh (3 kW) and 50,000 Btuh (15 kW), 12 in. (30 cm) for appliances > 500,000 Btuh (15 kW).
C= Clearance to permanently closed window.	*	*
D= Vertical clearance to ventilated soffit located above the terminal within a horizontal distance of 2 feet (61 cm) from the center line of the terminal.	*	*
E= Clearance to unventilated soffit.	*	*
F= Clearance to outside corner.	*	*
G= Clearance to inside corner.	*	*
H= Clearance to each side of center line extended above meter/regulator assembly.	3 ft. (91 cm) within a height 15 ft. (4.5 m) above the meter/regulator assembly.	*

	Canadian Installations [1]	U.S. Installations [2]
I= Clearance to service regulator vent outlet.	3 ft. (91 cm).	*
J= Clearance to nonmechanical air supply inlet to building or the combustion air inlet to any other appliance.	6 in. (15 cm) for appliances 10,000 Btuh (3 kW), 12 in. (30 cm) for appliances > 10,000 Btuh (3kW) and 100,000 Btuh (30 kW), 36 in. (91 cm) for appliances > 100,000 Btuh (30 kW).	6 in. (15 cm) for appliances 10,000 Btuh (3 kW), 9 in. (23 cm) for appliances > 10,000 Btuh (3kW) and 50,000 Btuh (15 kW), 12 in. (30 cm) for appliances > 50,000 Btuh (15 kW).
K= Clearance to a mechanical air supply inlet.	6 ft. (1.83 m)	3 ft. (91 cm) above if within 10 ft. (3 m) horizontally.
L= Clearance above paved sidewalk or paved driveway located on public property.	7 ft. (2.13m) †	*
M= Clearance under veranda, porch, deck or balcony.	12 in. (30 cm) ‡	*

1 In accordance with the current *CSA B149.1, Natural Gas and Propane Installation Code.*

2 In accordance with the current *ANSI Z223.1/NFPA 54, National Fuel Gas Code.*

† A vent shall not terminate directly above a sidewalk or paved driveway that is located between two single family dwellings and serves both dwellings.

‡ Permitted only if veranda, porch, deck or balcony is fully open on a minimum of two sides beneath the floor.

* For clearances not specified in *ANSI Z223.1/NFPA 54* or *CSA B149.1*, the following statement shall be included:

"Clearance in accordance with local installation codes and the requirements of the gas supplier and the manufacturer's installation instruction."

OTHER THAN DIRECT VENT TERMINAL CLEARANCES

	Canadian Installations [1]	U.S. Installations [2]
A= Clearance above grade, veranda, porch, deck or balcony. (See 1.24.6-i(9)b.)	12 in. (30 cm)	12 in. (30 cm)
B= Clearance to window or door that may be opened.	6 in. (15 cm) for appliances 10,000 Btuh (3 kW), 12 in. (30 cm) for appliances > 10,000 Btuh (3 kW) and 100,000 Btuh (30 kW), 36 in. (91 cm) for appliances > 100,000 Btuh (30 kW).	4 ft. (1.2 m) below or to side of opening; 1 ft. (300 m) above opening.
C= Clearance to permanently closed window.	*	*
D= Vertical clearance to ventilated soffit located above the terminal within a horizontal distance of 2 feet (61 cm) from the center line of the terminal.	*	*
E= Clearance to unventilated soffit.	*	*
F= Clearance to outside corner.	*	*
G= Clearance to inside corner.	*	*
H= Clearance to each side of center line extended above meter/regulator assembly.	3 ft. (91 cm) within a height 15 ft. (4.5 m) above the meter/regulator assembly.	*

	Canadian Installations[1]	U.S. Installations[2]
I= Clearance to sevice regulator vent outlet.	3 ft. (91 cm).	*
J= Clearance to nonmechanical air supply inlet to building or the combustion air inlet to any other appliance.	6 in. (15 cm) for appliances 10,000 Btuh (3 kW), 12 in. (30 cm) for appliances > 10,000 Btuh (3kW) and 100,000 Btuh (30 kW), 36 in. (91 cm) for appliances > 100,000 Btuh (30 kW).	4 ft. (1.2 m) below or to side of opening; 1 ft. (300 m) above opening.
K= Clearance to a mechanical air supply inlet.	6 ft. (1.83 m)	3 ft. (91 cm) above if within 10 ft. (3 m) horizontally.
L= Clearance above paved sidewalk or paved driveway located on public property.	7 ft. (2.13m) †	7 ft. (2.13m)
M= Clearance under veranda, porch, deck or balcony.	12 in. (30 cm) ‡	*

1 In accordance with the current *CSA B149.1, Natural Gas and Propane Installation Code.*

2 In accordance with the current *ANSI Z223.1/NFPA 54, National Fuel Gas Code.*

† A vent shall not terminate directly above a sidewalk or paveable driveway that is located between two single family dwellings and serves both dwelling.

‡ Permitted only if veranda, porch, deck or balcony is fully open on a minimum of two sides beneath the floor.

* For clearances not specified in *ANSI Z223.1/NFPA 54* or *CSA B149.1*, the following statement shall be included:

"Clearance in accordance with local installation codes and the requirements of the gas supplier and the manufacturer's installation instruction."

All 90° elbows must be medium radius (1/4 bend DWV) or long radius (Long sweep 1/4 bend DWV) types conforming to ASTM D3311. A medium radius (1/4 bend DWV) elbow measures 3 1/16" minimum from the plane of one opening to the centerline of the other opening for 2" diameter pipe, and 4 9/16" minimum for 3" pipe.

The use of two short radius 45 degree elbows is permitted to provide clearance to refrigerant piping above the furnace.

Proper Vent/Flue and Combustion Air Piping Practices

Adhere to these instructions to ensure safe and proper furnace performance. The length, diameter, and number of elbows of the vent/flue pipe and combustion air pipe (when applicable) affects the performance of the furnace and must be carefully sized. All piping must be installed in accordance with local codes and these instructions.

Piping must be adequately secured and supported to prohibit sagging, joint separation, and/or detachment from the furnace. Horizontal runs of vent/flue and combustion air piping must be properly supported. PVC pipe supports must be no more than 5' apart. For ABS pipe, supports must be no more than 3' apart. Horizontal pipe runs must maintain a 1/4 inch per foot downward slope, back towards the furnace, to properly return condensate to the furnace's drain system.

PREFERRED

TRANSITION MADE IN VERTICAL SECTION OF PIPE

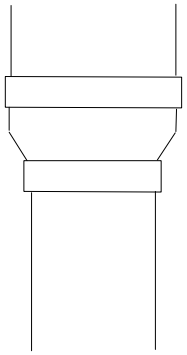

ACCEPTABLE

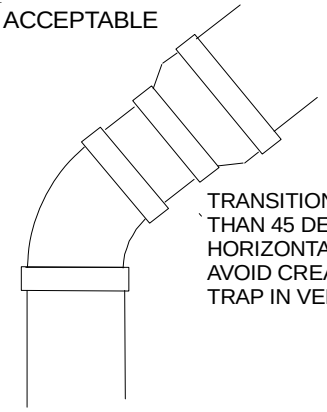

TRANSITION NO LESS THAN 45 DEGREES TO HORIZONTAL PLANE TO AVOID CREATING A WATER TRAP IN VENT PIPING.

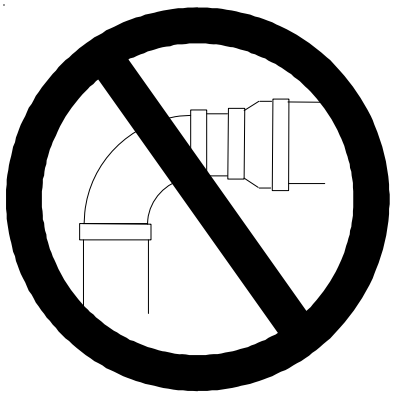

NO TRANSITION ON HORIZONTAL PLANE, THIS CREATES A WATER TRAP AND RESTRICTS FLUE GASES

Precautions should be taken to prevent condensate from freezing inside the vent/flue pipe and/or at the vent/flue pipe termination. All vent/flue piping exposed to temperatures below 35°F for extended periods of time must be insulated with 1/2" thick closed cell foam. Also, all vent/flue piping exposed outdoors in excess of the terminations shown in this manual (or in unheated areas) must be insulated with 1/2" thick closed cell foam. Inspect piping for leaks prior to installing insulation.

Termination Locations

NOTE: Refer to *Location Requirements and Considerations* for combustion air contaminant restrictions.

The following bullets and diagram describe the restrictions concerning the appropriate location of vent/flue pipe and combustion air intake pipe (when applicable) terminations. Refer to *Non-Direct Vent (Single Pipe) Piping* and *Direct Vent (Dual Pipe) Piping* located in this section for specific details on termination construction.

- All terminations (flue and/or intake) must be located at least 12 inches above ground level or the anticipated snow level.
- Vent terminations (non-direct and direct vent) must terminate at least 3 feet above any forced air inlet located within 10 feet.

  NOTE: This provision does not apply to the combustion air intake termination of a direct vent application.
- The vent termination of a *direct vent* application must terminate at least 12 inches from any opening through which flue gases may enter a building (door, window, or gravity air inlet).
- The vent termination running vertically through a roof must terminate at least 12 inches above the roof line (or the anticipated snow level) and be at least 12 inches from any vertical wall (including any anticipated snow build up).
- A vent termination shall not terminate over public walkways or over an area where condensate or vapor could create a nuisance or hazard or could be detrimental to the operation of regulators, relief valves, or other equipment.
- The combustion air intake termination of a direct vent application should not terminate in an area which is frequently dusty or dirty.

NOTE: In Canada, the current edition of CAN/CSA B149.1 takes precedence over the preceding termination restriction.

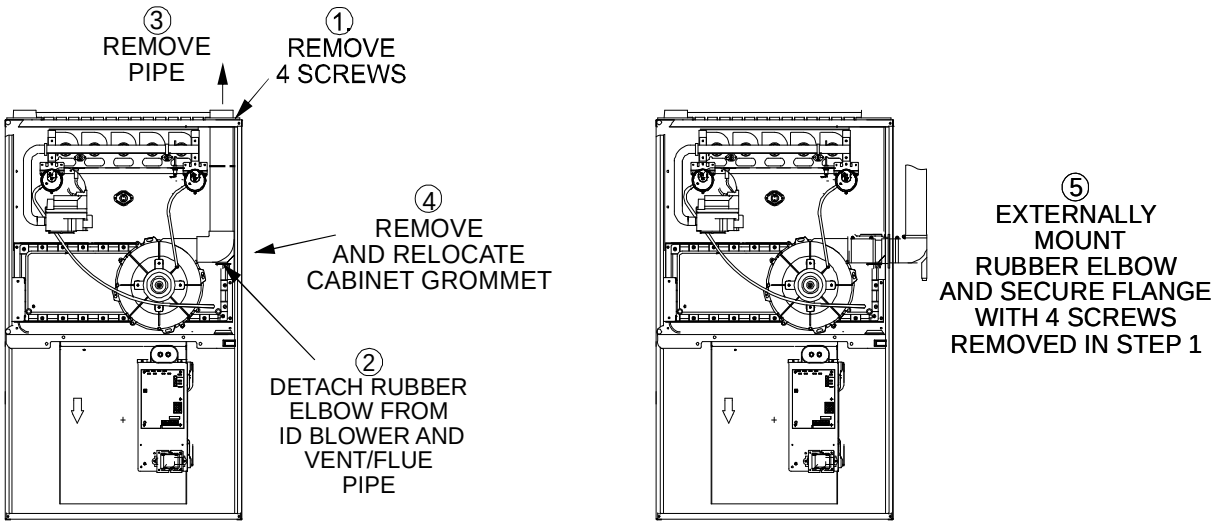

UPFLOW-HORIZONTAL MODELS ALTERNATE VENT CONNECTION

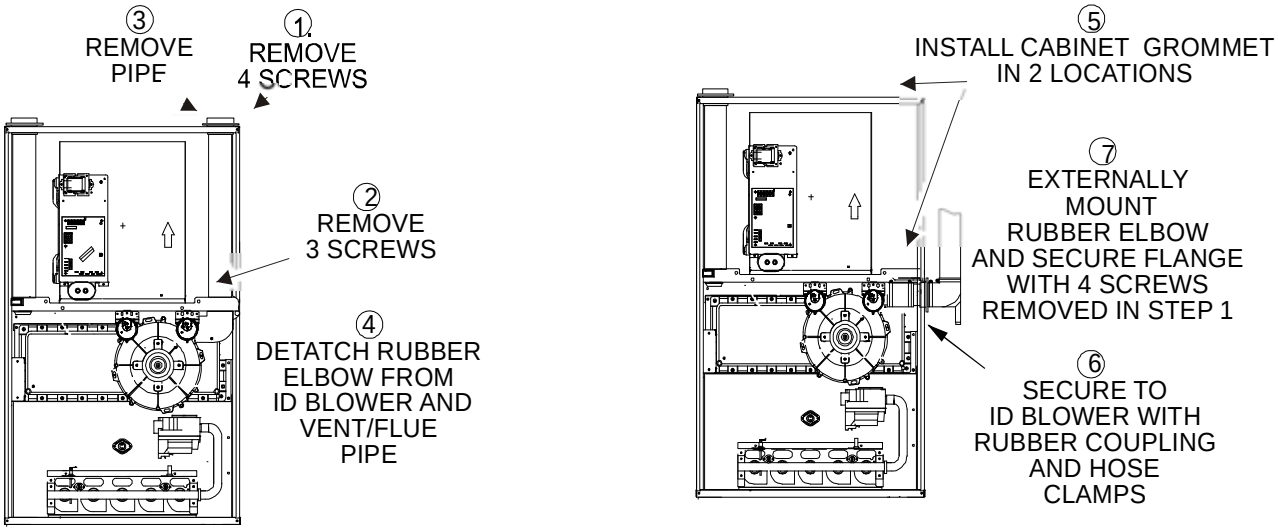

COUNTERFLOW-HORIZONTAL MODEL ALTERNATE VENT

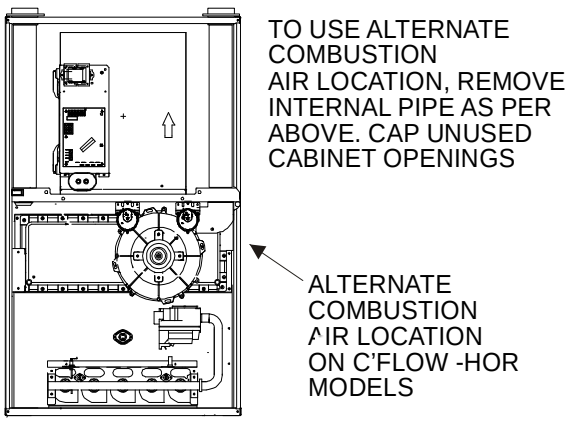

COUNTERFLOW-HORIZONTAL MODEL ALTERNATE COMBUSTION AIR LOCATION

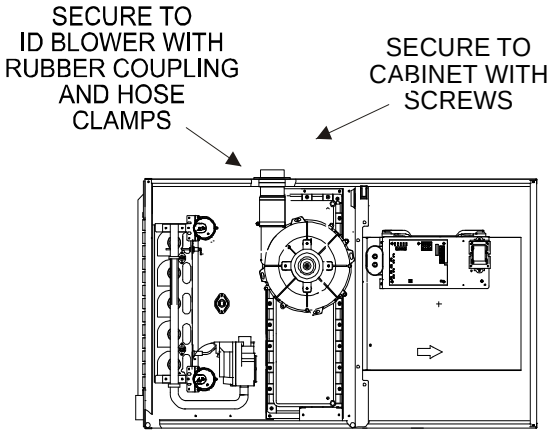

HORIZONTAL LEFT INSTALLATION USING ALTERNATE VENT LOCATION REQUIRES THE ADDITION OF AN RF000142 VENT DRAIN KIT WHEN ELIMINATING ELBOW

Special Venting Requirements For Installations In Canada

All installations in Canada must conform to the requirements of CAN/CSA B149.1 code. All vent system components, including primer and cement, must be listed to ULC S636. The certified pipe and fittings should be clearly marked with the ULC standard "S636". The primer and cement used must be of the same manufacturer as the vent system. For Royal Pipe System 636; use GVS-65 Primer (Purple) and GVS-65 PVC Solvent Cement. For IPEX System 636, use PVC/CPVC Primer, Purple or clear. Use PVC Solvent Cement (Gray).

For Canadian installations, ABS may be used as a combustion air pipe only. ABS is not an approved vent material in Canada. If ABS is used as a combustion air pipe, it must be CSA certified. Always follow the manufacturer's instructions in the use of primer and cement. Do not use primer and cement around potential sources of ignition. Do not use primer or cement beyond its expiration date.

The safe operation, as defined by ULC S636, of the vent system is based on following these installation instructions, the vent system manufacturer's installation instructions, and proper use of primer and cement. It is recommended under this standard, that the vent system be checked once a year by qualified service personnel. All fire stops and roof flashings used with this system must be UL listed. Acceptability under CAN/CSA B149.1 is dependent upon full compliance with all installation instructions. Consult the authority having jurisdiction (gas inspection authority, municipal building department, fire department, etc.) before installation to determine the need to obtain a permit. **IPEX System 636™ is a trademark of IPEX Inc.*

Carefully follow the pipe manufacturers' instructions for cutting, cleaning, and solvent cementing PVC and/or ABS.

The vent can be run through an existing unused chimney provided the space between the vent pipe and the chimney is insulated and closed with a weather-tight, corrosion-resistant flashing.

Standard Furnace Connections

It is the responsibility of the installer to ensure that the piping connections to the furnace are secure, airtight, and adequately supported.

Upflow/horizontal models are shipped with one 2" rubber coupling to attach the vent pipe to the furnace. Counterflow/horizontal models are shipped with two 2" rubber couplings for attaching the vent pipe and combustion air pipe/fitting to the furnace. Rubber couplings are typically shipped in the furnace drain trap.

Vent/Flue Pipe

Vent/flue pipe can be secured to the vent/flue coupling using the rubber coupling and worm gear hose clamps provided with this furnace (see "Standard Connections" figure). The rubber coupling allows separation of the vent/flue pipe from the furnace during servicing. Combustion Air and Vent piping should be routed in a manner to avoid contact with refrigerant lines, metering devices, condensate drain lines, etc. If necessary, clearances may be increased by creating an offset using two 45 degree elbows. This joint can be rotated on the fitting to establish maximum clearance between refrigerant lines, metering devices, and condensate drain lines, etc. This joint is the equivalent of one 90 deg. elbow when considering elbow count.

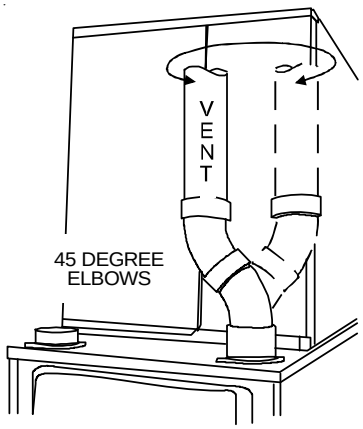

Increased Clearance Configuration

The vent/flue pipe can also be secured using a PVC or ABS elbow or coupling using the appropriate glue (see *Materials and Joining Methods)*.

NOTE: For *non-direct vent* installations, a minimum of one 90° elbow should be installed on the combustion air intake coupling to guard against inadvertent blockage.

Combustion Air Pipe

Direct Vent Installations

On *upflow* units secure the combustion air intake pipe directly to the air intake coupling. On *counterflow* units secure the combustion air intake pipe to the air intake coupling using the rubber coupling and worm gear hose clamps provided with the unit. The counterflow rubber coupling allows service removal of air intake piping internal to the furnace blower compartment. The combustion air intake pipe can also be secured directly to the counterflow unit air intake pipe coupling.

Non-Direct Vent Installations

A minimum of one 90° elbow should be installed on the combustion air intake "coupling" to guard against inadvertent blockage.

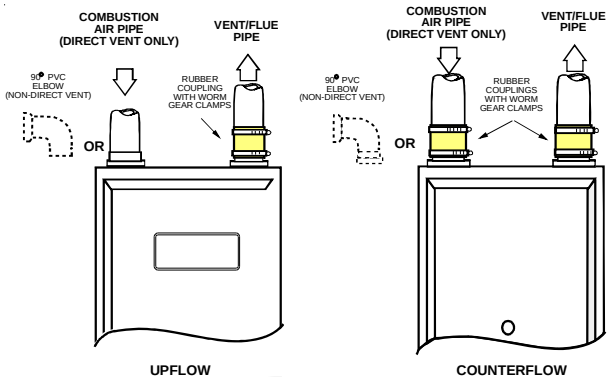

Standard Connections

Alternate Furnace Connections

If the standard locations are undesirable for a specific installation, alternate side panel locations are available for both combustion air inlet and vent/flue pipe connections on counterflow-horizontal models. On upflow-horizontal models, only an alternate vent location is provided.

NOTE: Standard and alternate locations can be combined (i.e., an installation may use the standard combustion air intake location but use the alternate vent/flue location or vice versa), if needed.

WARNING

Edges of sheet metal holes may be sharp. Use gloves as a precaution when removing hole plugs.

Alternate Vent/Flue Location

The alternate vent/flue location is the large hole directly in line with the induced draft blower outlet. To use the alternate vent/flue location refer to the following steps and the "Alternate Vent/Flue Location" figure.

NOTE: In the horizontal left installation position, a means of condensate collection must be provided to keep vent pipe condensate from entering the draft inducer housing. If the vent-drain elbow is eliminated from the installation; an RF000142 kit must be used.

1. Remove and save the four screws securing the vent/flue coupling to the furnace top panel.

   Counterflow units.

   Remove and save the four screws securing the vent/flue coupling to the furnace. Also remove the three screws securing the furnace's internal vent/flue piping to the blower deck.
2. *Upflow* and *Counterflow* units.

   Loosen the worm gear hose clamps on the rubber elbow and detach it from both the induced draft blower and the vent/flue pipe.
3. *Upflow* and *Counterflow* units.

   Remove the vent/flue pipe from the furnace.
4. Cut the vent/flue pipe 3.75 inches from the flanged end of the pipe (see "Vent/Flue Pipe Cuts" figure). The section of pipe attached to the coupling will reach through the side panel to the induced draft blower. Discard remaining pipe and elbows.

Counterflow units.

Cut the vent/flue pipe 3.75 inches from the blower deck coupling (see "Vent/Flue Pipe Cuts" figure). Save vent/flue pipe attached to blower deck coupling for use in the alternate location. Discard remaining pipe and elbows.

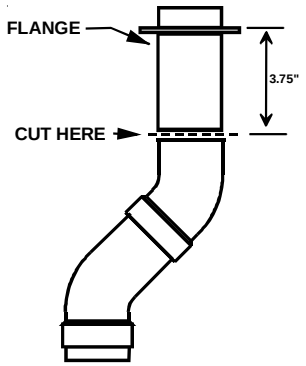

Vent/Flue Pipe Cuts

5. Remove plastic plug from alternate vent/flue location. Relocate and install plug in standard vent/flue location (top cover).

   Counterflow units.

   Remove plastic plug from alternate vent/flue location. Relocate and install grommet in standard vent/flue location (basepan). Grommet remaining hole in blower deck with plastic plug included in the drain kit bag.
6. *Upflow* and *Counterflow* units.

   Insert cut section of vent/flue pipe and coupling into alternate vent/flue location. Using a rubber coupling and worm gear hose clamps from the drain kit bag, attach the vent/flue pipe and coupling to the induced draft blower. Secure the coupling to the cabinet using the screws removed in step 1 or with field-supplied 3/8" #8 self tapping screws.

WARNING

The rubber elbow is not designed to support a load. When the rubber elbow is mounted externally to the furnace cabinet, extreme care must be taken to adequately support field-supplied vent/flue piping, as damage can result in leaks causing bodily injury or death due to exposure to flue gases, including carbon monoxide

7. *Upflow* and *Counterflow* units.

   For **upright installations**, externally mount the rubber elbow to the vent/flue coupling using a worm gear hose clamp. Secure field supplied vent/flue piping to the rubber elbow using a worm gear hose clamp. **NOTE:** Use of the alternate vent/flue location for upright installations, requires the drain trap be installed on the same side of the unit as the flue pipe.

Alternate Combustion Air Intake Location - Counterflow/ Horizontal Models Only

The alternate combustion air intake location consists of a large, unobstructed hole (alternate vent connection is aligned with the Induced Draft Blower). To use the alternate combustion air intake location, refer to the following steps, and the "Alternate Combustion Air Intake Location" figure.

1. Remove and save the four screws securing the combustion air intake coupling. Remove an additional three screws securing the furnace's internal combustion air intake pipe to the blower deck.

2. Remove the combustion air intake pipe from the furnace and cut the pipe at the basepan coupling. Save the basepan coupling and gasket from the blower deck coupling for use in the alternate location. Discard the remaining pipe.

3. Remove plastic plug from alternate combustion air intake location. Relocate and install plug in standard air intake location (basepan). Grommet the remaining hole in the blower deck with the plastic plug included in the drain kit bag.
4. With the gasket facing the cabinet side panel, and the flange's flat spot facing forward, secure the combustion air intake coupling to the cabinet using the screws removed in step 1 or with field-supplied 3/8" #8 self -tapping screws.

CAUTION

BE SURE NOT TO DAMAGE INTERNAL WIRING OR OTHER COMPONENTS WHEN REINSTALLING COUPLING AND SCREWS.

5. For ***non-direct vent installations*** installed *horizontally*, a minimum of one 90° elbow should be installed on the combustion air intake coupling to guard against inadvertent blockage. No elbow is required on the alternate combustion air intake of *upright* installations, however, a minimum clearance of 2 inches is required to assure proper air supply.
6. For ***direct vent installations***, secure field-supplied combustion air intake pipe directly to the air intake coupling.

   NOTE: A PVC coupling or elbow is required on counterflow units.

NON-DIRECT VENT (SINGLE PIPE) PIPING

Non-direct vent installations require only a vent/flue pipe. The vent pipe can be run horizontally with an exit through the side of the building or run vertically with an exit through the roof of the building. The vent can also be run through an existing *unused* chimney; however, it must extend a minimum of 12 inches above the top of the chimney. The space between the vent pipe and the chimney must be closed with a weather-tight, corrosion-resistant flashing. For details concerning connection of the vent/flue pipe to the furnace, refer to *Vent/Flue Pipe and Combustion Air - Standard Furnace Connections* or *Alternate Furnace Connections* for specific details. Refer to the following *Non-Direct Vent (Single Pipe) Piping - Vent/Flue Pipe Terminations* for specific details on termination construction.

Although *non-direct vent* installations do not require a combustion air intake *pipe*, a minimum of one 90° elbow should be attached to the furnace's combustion air intake. This elbow will guard against inadvertent blockage of the air intake.

VENT/FLUE PIPE LENGTHS AND DIAMETERS

Refer to the following table for applicable length, elbows, and pipe diameter for construction of the vent/flue pipe system of a non-direct vent installation. In addition to the vent/flue pipe, a single 90° elbow should be secured to the combustion air intake to prevent inadvertent blockage. The tee used in the vent/flue termination must be counted as an elbow when determining the number of elbows in the piping system.

DM96MC / DC96MC Direct Vent (2 - Pipe) and Non-Direct Vent (1- Pipe) (6)										
Maximum Allowable Length of Vent/Flue Pipe & Combustion Air Pipe (ft) (1) (2)										
Unit Input (Btu)	Pipe Size (4) (in.)	Number of Elbows (3) (5)								
		0	1	2	3	4	5	6	7	8
60,000	2 or 2 1/2	250	245	240	235	230	225	220	215	210
80,000	2 or 2 1/2	250	245	240	235	230	225	220	215	210
80,000	3	250	243	236	229	222	215	208	201	194
100,000	2 or 2 1/2	90	85	80	75	70	65	60	55	50
100,000	3	250	243	236	229	222	215	208	201	194
115,000	2 or 2 1/2	75	70	65	60	55	50	45	40	35
115,000	3	220	213	206	199	192	185	178	171	164

1) Maximum allowable limits listed on individual lengths for inlet and flue and NOT a combination.

2) Minimum requirement for each vent pipe is five (5) feet in length and one elbow/tee.

3) Tee used in the vent/flue termination must be included when determining the number of elbows in the piping system.

4) 2 1/2" or 3" diameter pipe can be used in place of 2" diameter pipe.

5) Increased Clearance Configurations using (2) 45 deg. elbows should be considered equivalent to one 90 deg. elbow.

6) One 90° elbow should be secured to the combustion air intake connection.

VENT/FLUE PIPE TERMINATIONS

NOTE: If either a 90 degree or 45 degree elbow is used for termination, it must be pointed downward.

The vent/flue pipe may terminate vertically, as through a roof, or horizontally, as through an outside wall.

Vertical vent/flue pipe terminations should be as shown in the following figure. Refer to *Vent/Flue Pipe and Combustion Air Pipe - Termination Locations* for details concerning location restrictions. The penetration of the vent through the roof must be sealed tight with proper flashing such as is used with a plastic plumbing vent.

Horizontal vent/flue pipe terminations should be as shown in the following figure. Refer to *Vent/Flue Pipe and Combustion Air Pipe - Termination Locations* for details concerning location restrictions. A 2 3/8" diameter wall penetration is required for 2" diameter pipe. A 3" diameter hole is required for a 2 1/2" pipe and a 3 1/2" diameter hole is required for 3" diameter pipe. The wall penetration should be sealed with silicone caulking material.

In a basement installation, the vent/flue pipe can be run between joist spaces. If the vent pipe must go below a joist and then up into the last joist space to penetrate the header, two 45° elbows should be used to reach the header rather than two 90° elbows.

NOTE: Terminate both pipes in the same pressure zone (same side of roof, no major obstacles between pipes, etc.).

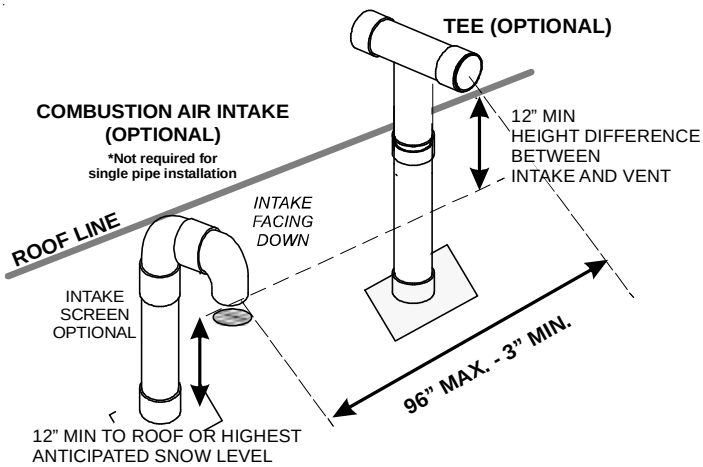

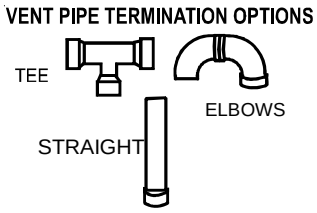

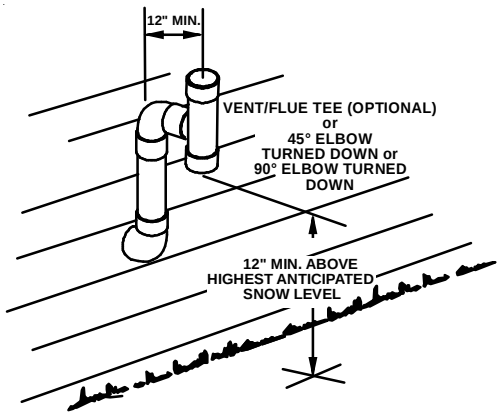

Horizontal Termination (Single Pipe) Above Highest Anticipated Snow Level

Direct Vent (Dual Pipe) Piping

The inlet air screens provided in the installation instruction packet are available for the installer to use in the inlet of the combustion air pipe to prevent animals from building nests in the combustion air pipe. Installation of screens, while strongly recommended, is not required and will not affect performance of the unit.

Direct vent installations require both a combustion air intake and a vent/flue pipe. The pipes may be run horizontally and exit through the side of the building or run vertically and exit through the roof of the building. The pipes may be run through an existing *unused* chimney; however, they must extend a minimum of 12 inches above the top of the chimney. The space between the pipes and the chimney must be closed with a weather tight, corrosion resistant flashing. Both the combustion air intake and a vent/flue pipe terminations must be in the same atmospheric pressure zone. *Example: Same side of structure, no major obstacles between pipes, etc.*

Vent/Flue & Combustion Air Pipe Lengths &Diameters

Refer to the following table for applicable length, elbows, and pipe diameter for construction of the vent/flue and combustion air intake pipe systems of a direct vent (dual pipe) installation. The number of elbows tabulated represents the number of elbows and/or tees in each (Vent/Flue & Combustion Air Intake) pipe. If there is a difference between the two pipes, count the pipe with the most fittings. Elbows and/or tees used in the terminations must be included when determining the number of elbows in the piping systems.

If the combustion air intake pipe is to be installed above a finished ceiling or other area where dripping of condensate will be objectionable, insulation of the combustion air pipe may be required. Use 1/2" thick closed cell foam insulation such as Armaflex™ or Insultube™ where required.

Vent/Flue and Combustion Air Pipe Terminations

The vent/flue and combustion air pipes may terminate vertically, as through a roof, or horizontally, as through an outside wall.

Refer to Vent/Flue Pipe and Combustion Pipe - Termination Locations for details concerning location restrictions. The penetrations through the roof must be sealed tight with proper flashing such as is used with a plastic plumbing vent.

Horizontal terminations should be as shown in the following figure. Refer to *Vent/Flue Pipe and Combustion Pipe - Termination Location* for location restrictions. A 2 3/8" diameter wall penetration is required for 2" diameter pipe. A 3" diameter hole is required for a 2 1/2" pipe and a 3 1/2" diameter hole is required for 3" diameter pipe. The wall penetration should be sealed with silicone caulking material.

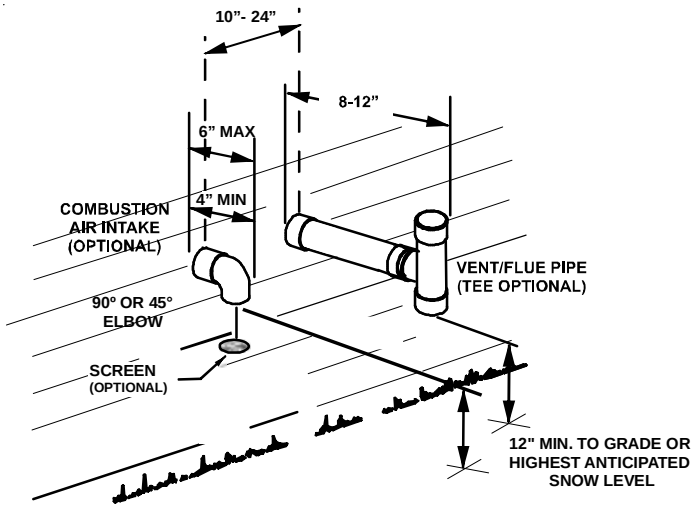

Standard Horizontal Terminations (Dual Pipe)

Vent & Combustion Air Intake Measurements for Standard Horizontal Terminations (Dual Pipe)

Center to center = 10” min / 24” max.

Vertical separation: 0” - 24”

Vent termination from wall = 8” min / 12” max.

Combustion air intake from wall = 6” max.

Vent and intake clearance to ground

or anticipated snow level = 12” min.

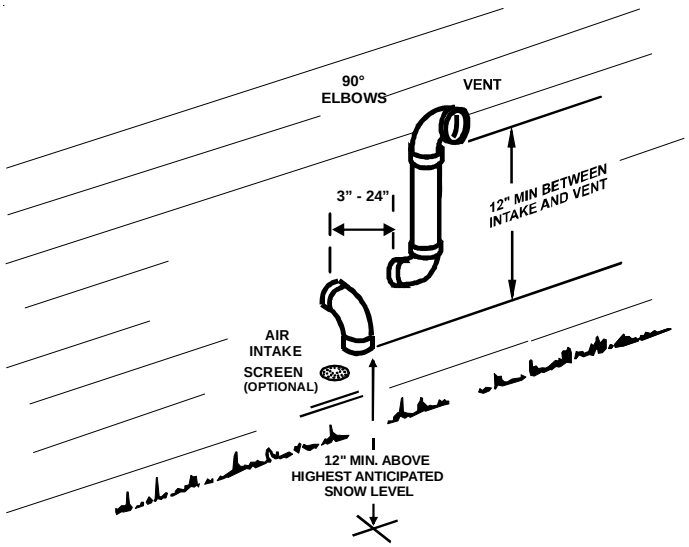

Alternate Horizontal Vent Termination (Dual Pipe)

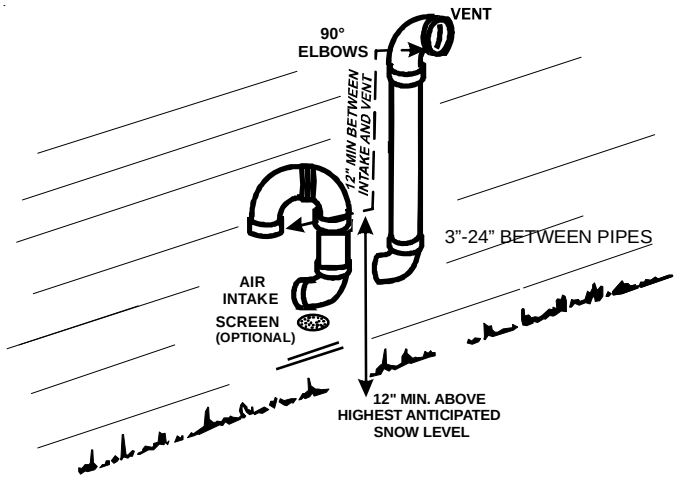

Combustion Air Intake may also be snorkeled to obtain 12” min ground clearance.

Alternate Vent Termination Above Anticipated Snow Level (Dual Pipe)

Vent/Intake Terminations For Installation of Multiple Direct Vent Furnaces

If more than one direct vent furnace is to be installed vertically through a common roof top, maintain the same minimum clearances between the exhaust vent and air intake terminations of adjacent units as with the exhaust vent and air intake terminations of a single unit.

If more than one direct vent furnace is to be installed horizontally through a common side wall, maintain the clearances as in the following figure. Always terminate all exhaust vent outlets at the same elevation and always terminate all air intakes at the same elevation.

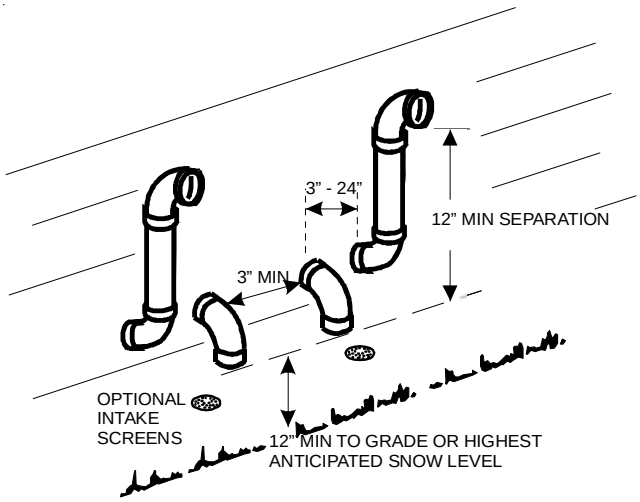

Termination of Multiple Direct Vent Furnaces

Concentric Vent Termination

Refer to the directions provided with the Concentric Vent Kit (DCVK) for installation specifications.

Side Wall Vent Kit

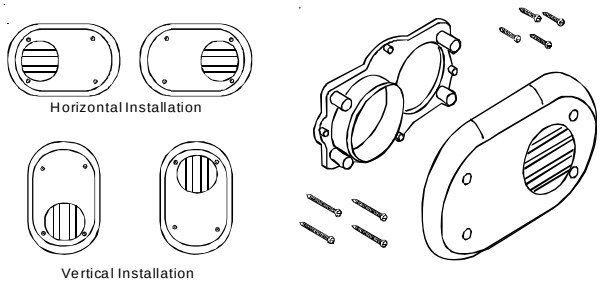

Side Wall Vent Kit

This kit is to be used with 2” or 3” direct vent systems. The vent kit must terminate outside the structure and may be installed with the intake and exhaust pipes located side-by-side or with one pipe above the other. This kit is **NOT** intended for use with single pipe (indirect vent) installations.

Refer to the directions furnished with the Side Wall Vent Kit (p/n 0170K00000S) for installation specifications.

Condensate Drain Lines & Drain Trap

A condensing gas furnace achieves its high level of efficiency by extracting heat from the products of combustion to the point where condensation takes place. The condensate must be collected in the furnace drain trap and routed to an appropriate drain location in compliance with local and national codes.

In *upright* installations, the furnace’s drain hoses may exit either the right or left side of the furnace. **NOTE:** If the alternate vent/flue outlet is utilized in an upright installation, the drain trap and drain connections must be located on the same side as the alternate vent/flue outlet.

In *horizontal* installations, the drain hoses will exit through the bottom (down side) of the unit with the drain trap suspended beneath the furnace. The field-supplied drain system must be in accordance with all local codes and the instructions in the following sections.

Follow the bullets listed below when installing the drain system. Refer to the following sections for specific details concerning furnace drain trap installation and drain hose hook ups.

- The drain trap supplied with the furnace must be used.
- The drain line between furnace and drain location must meet local and nation codes.
- The drain line between furnace and drain location must maintain a 1/4 inch per foot downward slope toward the drain.
- Do not trap the drain line in any other location than at the drain trap supplied with the furnace.
- If the drain line is routed through an area which may see temperatures near or below freezing, precautions must be taken to prevent condensate from freezing within the drain line.
- If an air conditioning coil is installed with the furnace, a common drain may be used. An open tee must be installed in the drain line, near the cooling coil, to relieve positive air pressure from the coil's plenum. This is necessary to prohibit any interference with the function of the furnace's drain trap.

NOTE: In vertical installations, air conditioning coil condensate may drain into the furnace trap as long as there is a trap between the coil and the furnace trap and the drain pipe is not terminating below the water level of the furnace trap.

Standard Right or Left Side Drain Hose Connections

All installation positions require the use of the drain trap, hoses, tubes, and clamps. The following quantity of hoses, tubes, and hose clamps are provided with the unit.

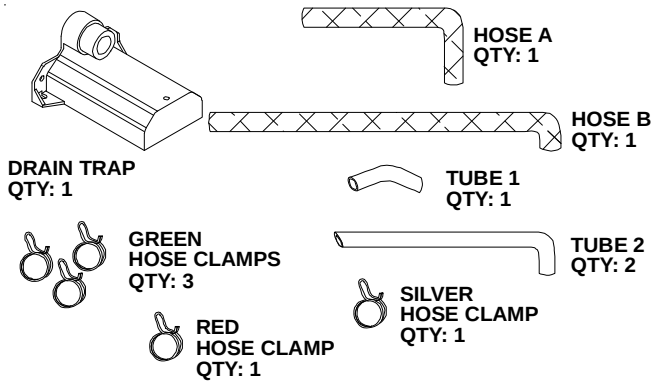

Hose and Tube Identification

Upright Installations-Trap on Right Side

In a upright installation drain hoses are connected to bottom drain port on the rubber elbow and the recuperator coil front cover. The drain lines are then routed through the right side panel and into the drain trap secured to the outside of the cabinet.

NOTE: Refer to *Alternate Vent/Flue Hose Connections* for upright installations using an alternate vent/flue outlet.

1. Remove the rubber plug from the right side of the front cover drain port.
2. Secure Hose A to front cover drain port with a red hose clamp. Route hose to rear side panel grommet hole.
3. Cut and remove 1/4 inch from the end of the drain port on the rubber elbow.
4. Insert Tube 1 into rubber elbow drain port and secure with silver hose clamp. Angle tube outward toward front of furnace.
5. Cut 17 3/4 inches from the long end of Hose B and discard. Secure the remaining hose to Tube 1 with a green hose clamp. Route the other end of Hose B to front right side panel grommet hole.
6. Insert short end of each of tube 2 through side panel grommet holes. Secure tubes to hoses A and B with green hose clamps. Ensure hoses and tubes maintain a downward slope for proper drainage and that they are not kinked or binding.

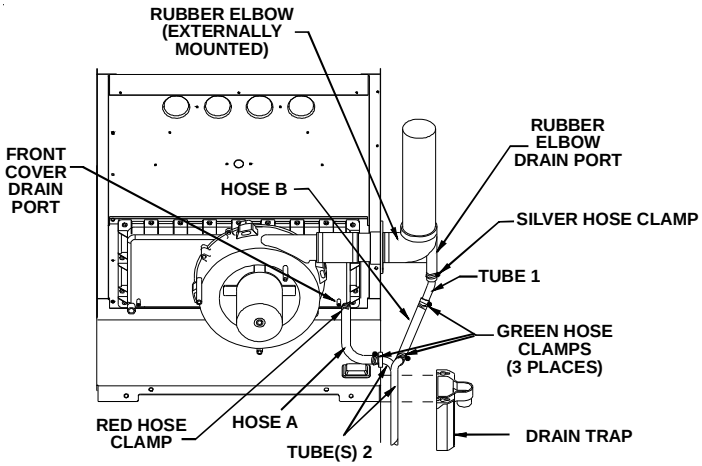

Upright "Alternate" Connections - Right Side (Upflow Shown, Counterflow Similar)

Alternate Vent/Flue Drain Hose Connections

Upright installations using the *alternate* vent/flue outlet will require "right-side only" drain hoses to be connected as follows. Refer to *Vent/Flue Pipe and Combustion Air Pipe* for details on alternate vent/flue pipe connection.

1. Remove the rubber plug/cap from the right-side drain port on the front cover . Save for use in step 3.
2. Secure Hose A to front cover drain port with a red hose clamp. Route hose to rear right side panel grommet hole.
3. Remove grommet from front right-side panel drain hole. Seal hole in grommet with large end of plug. Reinstall grommet and plug into side panel drain hole.
4. Cut 1/4 inch from the end of the drain port on the externally mounted rubber elbow. Discard cut portion.

5. Insert Tube 1 into rubber elbow drain port and secure with a silver hose clamp. Angle tube toward trap.
6. Cut 17 3/4 inches from the long end of Hose B and discard.
7. Secure straight end of Hose B to exposed end of Tube 1 with a green hose clamp. Route hose toward right side panel grommet holes.
8. Insert short end of one Tube 2 through rear right side panel grommet drain hole. Secure tube to Hose A with a green hose clamp.
9. Insert short end of remaining Tube 2 into Hose B from rubber elbow and secure with green hose clamp. Ensure hoses and tubes maintain a downward slope for proper drainage and are not kinked or binding.

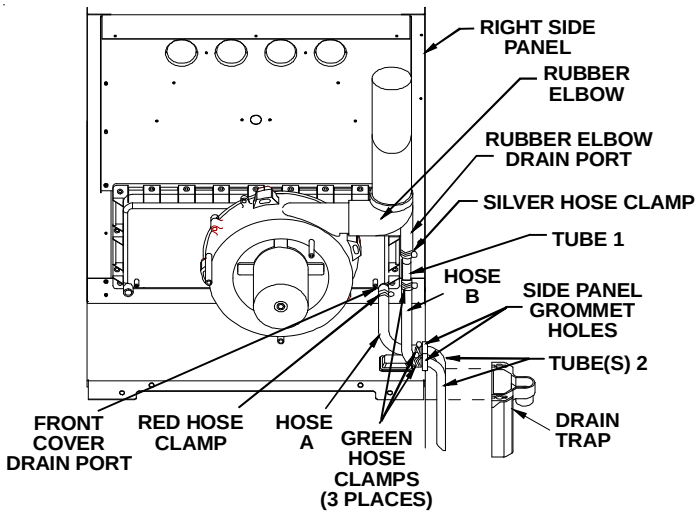

Upright "Standard" Connections - Right Side Only (Upflow Shown, Counterflow Similar)

Upright Installations-Trap on Left Side

NOTE: For left side trap installation, grommets must be moved to the left side of the furnace and the plugs installed on the right side of the furnace.

1. Remove the rubber plug/cap from the left side drain port on the front cover.
2. Secure Hose A to front cover drain port with a red hose clamp. Route hose to rear side panel grommet hole.
3. Cut and remove 1/4 inch from the end of the drain port on the rubber elbow.
4. Insert Tube 1 into rubber elbow drain port and secure with silver hose clamp. Angle tube outward toward front of furnace.
5. Refer to following Drain Hose B Table for hose "B" and trim to appropriate length (determined by furnace cabinet width). Secure remaining hose to Tube 1 with a green hose clamp. Route other end of Hose B to front left side panel grommet hole.

NOTE: Long hose "B" must always be connected to Tube 1 and the elbow and <u>not</u> on the front cover.

6. Insert short end of each Tube 2 through side panel grommet holes. Secure tubes to Hose A and Hose B with green hose clamps. Ensure hoses and tubes maintain a downward slope for proper drainage and that they are not kinked or binding.

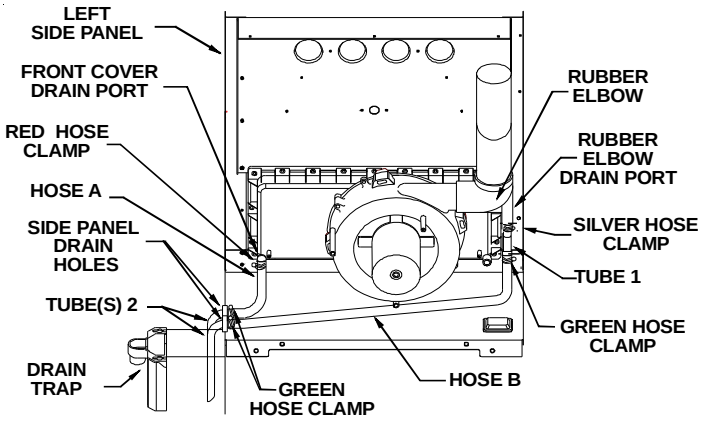

Upright "Standard" Connections - Left Side (Upflow Shown, Counterflow Similar)

Cabinet Width (inches)	Models (kBTU_Tons)	"X" Length to Cut From Long End of Hose B (inches)
17 1/2	60_3	7
21	60_4 80_5	3 1/2
24 1/2	80_5 100_5 115_5	None

Drain Hose "B" Table

Upright Drain Trap Mounting (Left or Right Side Panel)

1. Insert drain tubes into drain trap and position the drain trap against the side panel. **NOTE:** Drain tubes must reach the bottom of the drain trap.
2. Secure drain trap to side panel at the mounting holes (dimples or crosshairs on counterflow models) located below the grommet drain holes.
3. Attach PVC drain line to drain trap outlet with either a 90° elbow or coupling.

Horizontal Installations

Right Side Down

Horizontal installations with the right side down require that the drain hoses be connected to the right side front cover drain port and the rubber elbow drain port.

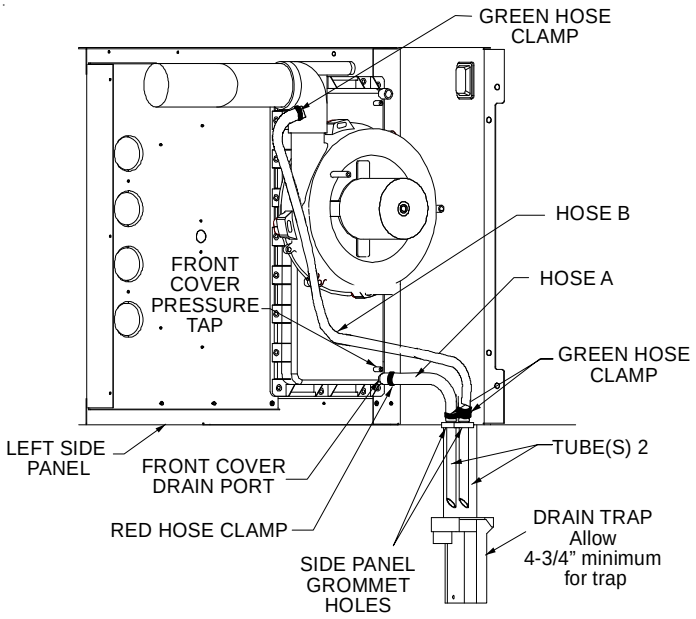

Horizontal Connections - Left Side Down (Upflow Shown, Counterflow Similar)

NOTE: On counterflow models, relocation of the front cover pressure switch hose is required. The pressure switch hose must be connected to the bottom port of the collector box cover to guard against blocked drain conditions. Cut hose to appropriate length to minimize sagging. Install the rubber plug on the open port.

Make connections as follows:

1. Remove the rubber plug/cap from right side of the front cover drain port.
2. Secure Hose A to front cover drain tap with a red hose clamp. Route hose to rear right (down) side panel grommet holes.
3. Cut 1/4 inch from the end of the drain port on the rubber elbow and discard.
4. Insert Tube 1 into rubber elbow drain port and secure with a silver hose clamp. Angle tube outward toward front of furnace.
5. Cut 17 3/4 inches from the long end of Hose B and discard.
6. Secure remaining end of Hose B to exposed end of Tube 1 with a green hose clamp. Route hose to front right down side panel grommet holes.
7. Cut 5 1/2 inches straight length from the long end of each Tube 2 and discard the radius pieces.
8. Insert approximately one inch of each Tube 2 through the right down side panel grommet holes. Secure tubes to Hose A and Hose B using green hose clamps. Ensure hoses and tubes maintain a downward slope for proper drainage and are not kinked or bound.

For details concerning mounting of the drain trap, refer to *Condensate Drain Lines and Drain Trap - Horizontal Drain Trap Mounting.*

Horizontal installations with the left side panel down will require drain hoses to be connected to the left side front cover drain port and the side drain port on the rubber elbow.

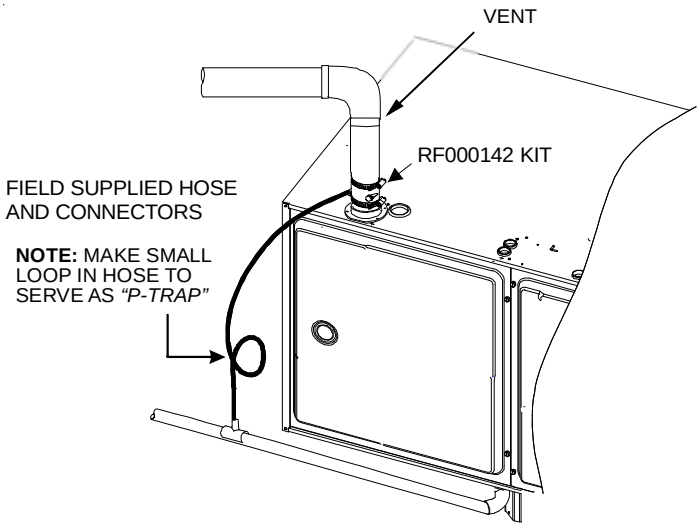

NOTE: When using the horizontal alternate vent configuration, you must use the RF000142 vent drain kit.

1. Remove the rubber plug/cap from the front cover left (down) side drain port.
2. Relocate the front cover pressure switch hose connection from the right side (as shipped) pressure tap to the left (down) side tap. The pressure switch hose must be connected to the down side to guard against blocked drain conditions. Cut hose to appropriate length to minimize sagging. Plug right (unused) pressure tap with plug removed from left side.
3. Secure Hose A to front cover drain port with a red hose clamp. Route hose to rear left (down) side panel grommet holes. **NOTE:** For left side drainage, grommets must be relocated to left side panel.
4. Remove the rubber cap from the side drain port on the rubber elbow.
5. Secure the short end of Hose B to rubber elbow side drain port using a green hose clamp. **NOTE:** For left side drainage, route hose to far left (down) side panel grommet holes. **NOTE:** Horizontal left side connections (when using new side port drain elbow) <u>does not</u> require connecting a hose to the induced draft blower housing.
6. Cut 5 1/2 inches straight length from the long end of <u>each</u> Tube 2 and discard radius ends.
7. Insert approximately one inch of each Tube 2 through left side panel grommet hole. Secure tubes to Hose A and Hose B with a green hose clamps. **NOTE:** Tube must reach bottom of trap. Ensure hoses and tubes maintain a downward slope for proper drainage and that they are not kinked or binding.

For details concerning mounting of the drain trap, refer to *Condensate Drain Lines and Drain Trap - Horizontal Drain Trap Mounting.*

Horizontal Drain Trap Mounting (Left or Right Side Panel)

1. Position the drain trap against side panel with drain tubes inserted into trap. Note that the trap may be orientated with the outlet facing either the furnace's top cover or base pan.
2. Secure drain trap to side panel at the dimples or crosshairs located on either side of the grommet drain holes.
3. Confirm that tubes reach bottom of drain trap and that all hoses maintain a downward slope and are not kinked or binding.
4. Attach PVC drain line to drain trap outlet with either a 90° elbow or coupling.

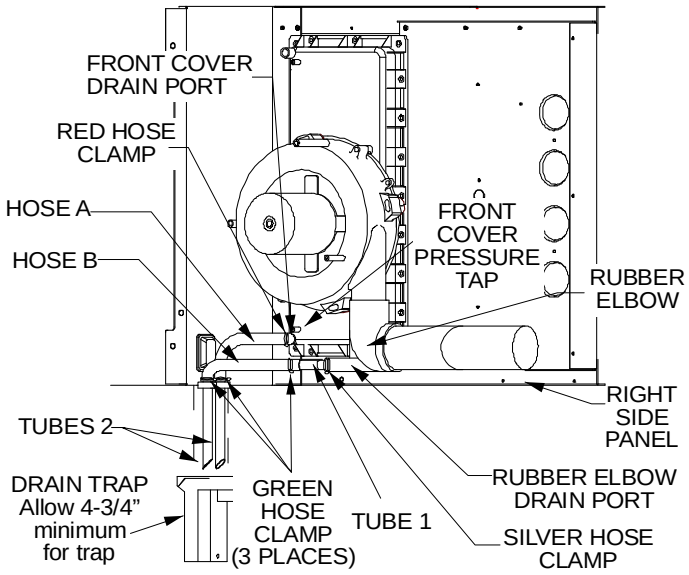

Horizontal Connections - Right Side Down
(Upflow Shown, Counterflow Similar)

Electrical Connections

WARNING

HIGH VOLTAGE !

To avoid the risk of electrical shock, wiring to the unit must be polarized and grounded.

WARNING

HIGH VOLTAGE !

To avoid personal injury or death due to electrical shock, disconnect electrical power before servicing or changing any electrical wiring.

CAUTION

Label all wires prior to disconnection when servicing controls. Wiring errors can cause improper and dangerous operation. Verify proper operation after servicing.

Wiring Harness

The wiring harness is an integral part of this furnace. Wires are color coded for identification purposes. Refer to the wiring diagram for wire routings. If any of the original wire as supplied with the furnace must be replaced, it must be replaced with wiring material having a temperature rating of at least 105° C. Any replacement wiring must be a copper conductor.

115 Volt Line Connections

Before proceeding with electrical connections, ensure that the supply voltage, frequency, and phase correspond to that specified on the unit rating plate. Power supply to the furnace must be NEC Class 1, and must comply with all applicable codes. The furnace must be electrically grounded in accordance with local codes or, in their absence, with the latest edition of The National Electric Code, ANSI NFPA 70 and/or The Canadian Electric Code CSA C22.1.

Use a separate fused branch electrical circuit containing properly sized wire, and fuse or circuit breaker. The fuse or circuit breaker must be sized in accordance with the maximum overcurrent protection specified on the unit rating plate. An electrical disconnect must be provided at the furnace location.

Connect hot, neutral, and ground wires as shown in the wiring diagram located on the unit's blower door. For direct vent applications, the cabinet opening to the junction box must be sealed air tight using either an UL approved bushing such as Heyco Liquid Tight or by applying non-reactive UL approved sealant to bushing.

Line polarity must be observed when making field connections. Line voltage connections can be made through either the right or left side panel. The furnace is shipped configured for a right side (left side for counterflows) electrical connection with the junction box located inside the burner compartment. To make electrical connections through the opposite side of the furnace, the junction box must be relocated to the other side of the burner compartment prior to making electrical connections. To relocate the junction box, follow the steps shown below.

NOTE: Wire routing must not interfere with circulator blower operation, filter removal, or routine maintenance.

Junction Box Relocation

WARNING

Edges of sheet metal holes may be sharp. Use gloves as a precaution when removing hole plugs.

WARNING

TO PREVENT PERSONAL INJURY OR DEATH DUE TO ELECTRIC SHOCK, DISCONNECT ELECTRICAL POWER BEFORE INSTALLING OR SERVICING THIS UNIT.

WARNING

HIGH VOLTAGE !

TO AVOID THE RISK OF INJURY, ELECTRICAL SHOCK OR DEATH, THE FURNACE MUST BE ELECTRICALLY GROUNDED IN ACCORDANCE WITH LOCAL CODES OR IN THEIR ABSENCE, WITH THE LATEST EDITION OF THE NATIONAL ELECTRIC CODE. US: National Electrical Code (NEC) ANSI/NFPA 70-2011. In CANADA: Canadian Electrical Code CSA C22.1.

Line voltage connections can be made through either the right or left side panel. The furnace is shipped configured for a right side electrical connection. To make electrical connections through the opposite side of the furnace, the junction box must be relocated to the left side prior to making electrical connections. To relocate the junction box, perform the following steps.

1. Remove the burner compartment door.
2. Remove and save the two screws securing the junction box to the side panel.
3. Relocate junction box and associated plugs and grommets to opposite side panel. Secure with screws removed in step 2.

WARNING

TO AVOID THE RISK OF INJURY, ELECTRICAL SHOCK OR DEATH, THE FURNACE MUST BE ELECTRICALLY GROUNDED IN ACCORDANCE WITH LOCAL CODES OR, IN THEIR ABSENCE, WITH THE LATEST EDITION OF THE NATIONAL ELECTRICAL CODE.

To ensure proper unit grounding, an earth ground wire must be connected between the furnace ground screw located inside the furnace junction box and the electrical service panel. **NOTE:** Do not use gas piping as an electrical ground. To confirm proper unit grounding, turn off the electrical power and perform the following check.

1. Measure resistance between the neutral (white) connection and one of the burners.
2. Resistance should measure 10 ohms or less.

This furnace is equipped with a blower door interlock switch which interrupts unit voltage when the blower door is opened for servicing. Do not defeat this switch.

24 VOLT THERMOSTAT WIRING

IMPORTANT NOTE

WIRE ROUTING MUST NOT INTERFERE WITH CIRCULATOR BLOWER OPERATION, FILTER REMOVAL OR ROUTINE MAINTENANCE.
A REMOVABLE PLUG CONNECTOR IS PROVIDED WITH THE FURNACE CONTROL TO MAKE THERMOSTAT WIRE CONNECTIONS. THIS PLUG MAY BE REMOVED, WIRE CONNECTIONS MADE TO THE PLUG, AND REPLACED. IT IS STRONGLY RECOMMENDED THAT MULTIPLE WIRES BE JOINED WITH A WIRE NUT AND A SINGLE CONDUCTOR BE INSERTED UNDER THE TERMINAL SCREW. FAILURE TO DO SO MAY RESULT IN INTERMITTENT OPERATION.

IMPORTANT NOTE

HEAT SET-UP DIP SWITCH - DIP SWITCH #13 MUST BE SET TO MATCH THERMOSTAT TYPE. TO USE THE CTK01 COMMUNICATING THERMOSTAT, DIP SWITCH #13 MUST BE SET TO ON POSITION. THIS IS ALSO THE CORRECT SETTING FOR A NON-COMMUNICATING 2-STAGE THERMOSTAT. TO USE CTK02 OR CTK03** MODULATING THERMOSTAT, CHECK TO MAKE SURE DIP SWITCH #13 IS IN THE OFF POSITION (FACTORY POSITION). THIS IS ALSO THE CORRECT POSITION WHEN USING A NON-COMMUNICATING SINGLE-STAGE THERMOSTAT.**

As a two-stage non-communicating furnace, the furnace integrated control module provides terminals for both “W1” and “W2”, and “Y1” and “Y2” thermostat connections. This allows the furnace to support the following system applications: ‘Two-Stage Heating Only’, ‘Two-Stage Heating with Single Stage Cooling’, and ‘Two-Stage Heating with Two-Stage Cooling’. Refer to the following figures for proper connections to the integrated control module.

Low voltage connections can be made through either the right or left side panel. Thermostat wiring entrance holes are located in the blower compartment. The following figure shows connections for a “heat/cool system”.

This furnace is equipped with a 40 VA transformer to facilitate use with most cooling equipment. Consult the wiring diagram, located on the blower compartment door, for further details of 115 Volt and 24 Volt wiring.

NOTE: Use of cooling ramping profiles and dehum feature requires a jumper between Y1 and O when a straight cooling unit is used.

IMPORTANT NOTE

THERMOSTAT “R” REQUIRED IF OUTDOOR UNIT IS EQUIPPED WITH A COMFORT ALERT™ MODULE OR IF THE OUTDOOR UNIT IS A PART OF THE COMFORTNET™ FAMILY OF EQUIPMENT.

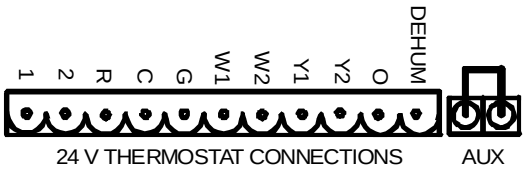

Low Voltage Connections with Auxiliary Terminals

The auxiliary contacts are shipped with a factory installed jumper. As an option, the auxiliary contacts may be wired to a normally closed float switch. In the event of open contacts, the gas heat and cooling will be disabled until the condition is corrected. These are 24 volt terminals powered internally, do not apply another voltage source to these terminals.

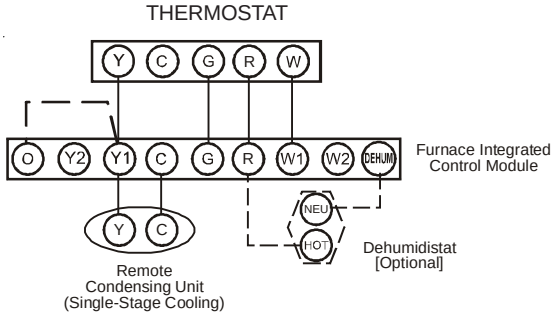

Thermostat - Single-Stage Heating with Single-Stage Cooling

NOTE: When installing a single stage cooling unit, it may be necessary to jumper Y1 and Y2 on the furnace board to achieve proper cooling CFM. Installer should check CFM charts to determine this. Typical Cooling CFM is 350-400 CFM per ton, based on outdoor unit size.

IMPORTANT NOTE

TO USE A SINGLE-STAGE HEAT THERMOSTAT, DIP SWITCH #13 ON THE FURNACE CONTROL BOARD MUST BE SET TO THE OFF POSITION.

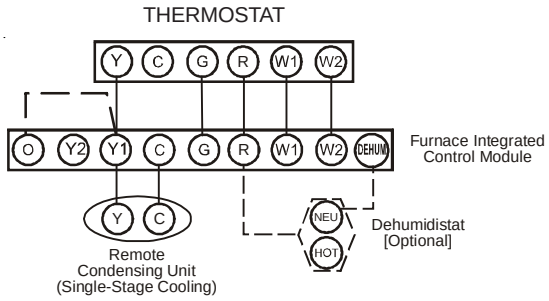

Thermostat - Two-Stage Heating with Single-Stage Cooling

NOTE: When installing a single stage cooling unit, it may be necessary to jumper Y1 and Y2 on the furnace board to achieve proper cooling CFM. Installer should check CFM charts to determine this. Typical Cooling CFM is 350-400 CFM per ton, based on outdoor unit size.

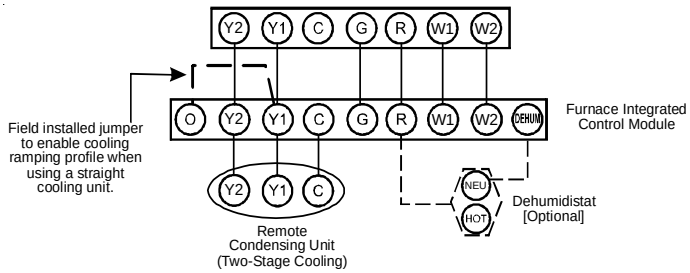

Thermostat - Two-Stage Heating with Two-Stage Cooling

IMPORTANT NOTE (COOLING SETUP)

SET DIP SWITCH #14 TO ON POSITION WHEN USING A 2-STAGE COOLING THERMOSTAT.

SINGLE-STAGE HEATING THERMOSTAT APPLICATION

A single-stage thermostat with only one heating stage may be used to control this furnace.

To use a single-stage thermostat, turn off power to the furnace, move the thermostat selection DIP switch to the OFF position. Turn power back on. Refer to the DIP switch chart in this manual.

24 VOLT DEHUMIDISTAT WIRING

The optional usage of a dehumidistat allows the furnace's circulator blower to operate at a slightly lower speed (85% of desired speed) during a combined thermostat call for cooling and dehumidistat call for dehumidification. This can be done through an independent dehumidistat or through a thermostat's DEHUM terminal (if available). This lower blower speed enhances dehumidification of the conditioned air as it passes through the AC coil. For proper function, a dehumidistat applied to this furnace must operate on 24 VAC and utilize a switch which *opens on humidity rise.* Refer to the "Thermostat Wiring Diagrams" figure for additional wiring details.

To install/connect a dehumidistat:

1. Turn OFF power to furnace.
2. Secure the dehumidistat neutral wire (typically the white lead) to the terminal marked "DEHUM" on the furnace integrated control module.
3. Secure the dehumidistat hot wire (typically the black lead) to the terminal marked "R" on the furnace integrated control module.
4. Secure the dehumidistat ground wire (typically the green lead) to the ground screw on the furnace junction box. **NOTE:** Ground wire may not be present on all dehumidistats.
5. If the condenser is a straight cooling unit, install a jumper from Y1 to 0 on the furnace board.
6. Turn ON power to furnace.

To enable the dehumidify function on the integrated control module, set the dehumidification ENABLE DIP switch from OFF to ON.

Once the switch is set, the dehumidify function is enabled during a *combination* call for cooling (T-Stat) and dehumidification (DEHUM-Stat). Refer to the DIP switch chart in the back section of this manual.

FOSSIL FUEL APPLICATIONS

This furnace can be used in conjunction with a heat pump in a fossil fuel application. A fossil fuel application refers to a combined gas furnace and heat pump installation which uses an outdoor temperature sensor to determine the most cost efficient means of heating (heat pump or gas furnace).

A heat pump thermostat with *three stages of heat* is required to properly use a two-stage furnace in conjunction with a heat pump. Refer to the fossil fuel kit (AFE18-60A) installation instructions for additional thermostat requirements.

Strictly follow the wiring guidelines in the fossil fuel kit installation instructions. All furnace connections must be made to the furnace control board and the "FURNACE" terminal strip on the fossil fuel control board.

Line Voltage Accessories (Electronic Air Cleaner and Humidifier)

WARNING

HIGH VOLTAGE !

To avoid personal injury or death due to electrical shock, disconnect electrical power before servicing or changing any electrical wiring.

The furnace control board is equipped with line voltage accessory terminals for controlling power to an electronic air cleaner.

The accessory load specifications are as follows. (The furnace control board also has a set of dry contacts for humidifier connection.)

Humidifier	1.0 Amp maximum at 120 VAC
Electronic Air Cleaner	1.0 Amp maximum at 120 VAC

Turn OFF power to the furnace before installing any accessories. Follow the humidifier or air cleaner manufacturers' instructions for locating, mounting, grounding, and controlling these accessories. Accessory wiring connections are to be made through the 1/4" quick connect terminals provided on the furnace integrated control module. The Electronic air cleaner hot terminal is identified as EAC. *It is necessary to remove the protective tab on the board cover to access the EAC Terminal.* The EAC neutral terminal is identified as NEUTRAL. A line voltage humidifier may be connected between one of the HUM contacts and NEUTRAL. The other HUM contact must be fed from the L1 terminal.

All field wiring must conform to applicable codes. Connections should be made as shown in the following figure.

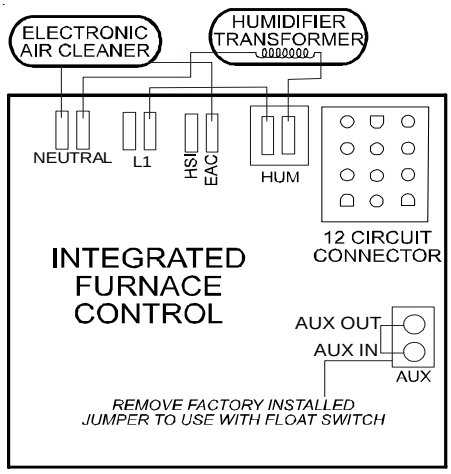

Accessories Wiring

If it is necessary for the installer to supply additional line voltage wiring to the inside of the furnace, the wiring must conform to all local codes, and have a minimum temperature rating of 105°C. All line voltage wire splices must be made inside the furnace junction box.

The furnace control board HUM (dry contacts) are closed whenever the inducer is energized in a non-communicating installation. When used with a CTK02** communicating thermostat, the HUM terminals are closed whenever there is a call for humidity. The integrated control module electronic air cleaner terminals (EAC) are energized with 115 volts whenever the circulator blower is energized.

24 Volt Humidifier

A 24 volt humidifier can be powered by feeding one of the HUM terminals with a field installed wire from the R terminal or by connecting to the NO side of the low fire pressure switch.

Gas Supply and Piping

The furnace rating plate includes the approved furnace gas input rating and gas types. The furnace must be equipped to operate on the type of gas applied. This includes any conversion kits required for alternate fuels and/or high altitude.

CAUTION

To prevent unreliable operation or equipment damage, the inlet gas supply pressure must be as specified on the unit rating plate with all other household gas fired appliances operating.

Inlet gas supply pressures must be maintained within the ranges specified in the following table. The supply pressure must be constant and available with all other household gas fired appliances operating. The minimum gas supply pressure must be maintained to prevent unreliable ignition. The maximum must not be exceeded to prevent unit overfiring.

Inlet Gas Supply Pressure		
Natural Gas	Minimum: 4.5" w.c.	Maximum: 10.0" w.c.
Propane Gas	Minimum: 11.0" w.c.	Maximum: 13.0" w.c.

High Altitude Derate

In some areas the gas supplier may artificially derate the gas in an effort to compensate for the effects of altitude. If the gas is artificially derated, the appropriate orifice size must be determined based upon the BTU/ft^3 content of the derated gas and the altitude. Refer to the National Fuel Gas Code, NFPA 54/ANSI Z223.1 or CAN/CSA B149.1 in Canada, and information provided by the gas supplier to determine the proper orifice size.

Propane Gas Conversion

WARNING

Possible property damage, personal injury or death may occur if the correct conversion kits are not installed. The appropriate kits must be applied to ensure safe and proper furnace operation. All conversions must be performed by a qualified installer or service agency.

As shipped, this unit is configured for natural gas. The appropriate manufacturer's propane gas conversion kit, must be applied for propane gas installations. Refer to the *Propane Gas and/or High Altitude Installations* for details.

Consult the furnace Specification Sheet for a listing of appropriate kits. The indicated kits must be used to insure safe and proper furnace operation. All conversions must be performed by a qualified installer, or service agency.

Gas Valve

This unit is equipped with a 24 volt gas valve which modulates by pneumatic linkage to the combustion air blower. Taps for measuring the gas supply pressure and manifold pressure are provided on the valve. This is a non-convertible, non-adjustable gas valve equipped for natural gas.

The gas valve has a manual ON/OFF control located on the valve itself. This control may be set only to the "ON" or "OFF" position. Refer to the lighting instructions label or the *Startup Procedure & Adjustment* section of this manual for use of this control during start up and shut down periods.

Gas Piping Connections

WARNING

To avoid possible unsatisfactory operation of equipment damage due to underfiring or equipment, use the proper size of natural/propane gas piping needed when running pipe from the meter/tank to the furnace.

The gas piping supplying the furnace must be properly sized based on the gas flow required, specific gravity of the gas, and length of the run. The gas line installation must comply with local codes, or in their absence, with the latest edition of the National Fuel Gas Code, NFPA 54/ANSI Z223.1 or CAN/CSA B149.1 in Canada.

Natural Gas Capacity of Pipe In Cubic Feet of Gas Per Hour (CFH)

	Pipe Size (in.)						
Nominal	**½**	**¾**	**1**	**1¼**	**1½**	**2**	**2½**
Actual ID:	**0.622**	**0.824**	**1.049**	**1.380**	**1.610**	**2.067**	**2.469**
Length (ft)	**Capacity in Cubic Feet of Gas per Hour**						
10	170	360	678	1390	2090	4020	6400
20	118	247	466	957	1430	2760	4400
30	95	199	374	768	1150	2220	3530
40	81	170	320	657	985	1900	3020
50	72	151	284	583	873	1680	2680
60	65	1370	257	528	791	1520	2430
70	60	126	237	486	728	1400	2230
80	56	117	220	452	677	1300	2080
90	52	110	207	424	635	1220	1950
100	50	104	195	400	600	1160	1840
125	44	92	173	355	532	1020	1630
150	40	83	157	322	482	928	1480
175	37	77	144	296	443	854	1360
200	34	71	134	275	412	794	1270
250	30	63	119	244	366	704	1120

This chart refers to natural gas with an inlet pressure of less than 2 psi and a pressure drop of 0.5" W.C. Specific gravity is 0.60.

$$\text{CFH} = \frac{\text{BTUH Furnace Input}}{\text{Heating Valve of Gas (BTU/Cubic Foot)}}$$

To connect the furnace to the building's gas piping, the installer must supply a ground joint union, drip leg, manual shutoff valve, and line and fittings to connect to gas valve. In some cases, the installer may also need to supply a transition piece from 1/2" pipe to a larger pipe size.

The following stipulations apply when connecting gas piping. Refer to *Gas Piping Connections* figure for typical gas line connections to the furnace.

- Gas piping must be supported external to the furnace cabinet so that the weight of the gas line does not distort the burner rack, manifold or gas valve.
- Use black iron or steel pipe and fittings for building piping. Where possible, use new pipe that is properly chamfered, reamed, and free of burrs and chips. If old pipe is used, be sure it is clean and free of rust, scale, burrs, chips, and old pipe joint compound.
- Use pipe joint compound on male threads ONLY. Always use pipe joint compound (pipe dope) that is APPROVED FOR ALL GASES. DO NOT apply compound to the first two threads.
- Use ground joint unions.
- Install a drip leg to trap dirt and moisture before it can enter the gas valve. The drip leg must be a minimum of three inches long.
- A line pressure test port is provided on the gas valve. If desired, install a 1/8" NPT pipe plug fitting, accessible for test gage connection, immediately upstream of the gas supply connection to the furnace.
- Always use a back-up wrench when making the connection to the gas valve to keep it from turning. The orientation of the gas valve on the manifold must be maintained as shipped from the factory. Maximum torque for the gas valve connection is 375 in-lbs; excessive over-tightening may damage the gas valve.

- Install a manual shutoff valve between the gas meter and unit within six feet of the unit. If a union is installed, the union must be downstream of the manual shutoff valve, between the shutoff valve and the furnace.
- Tighten all joints securely.
- Connection method must be in compliance with all local and national codes. US: National Fuel Gas Code (NFGC) NFPA 54-2012/ANSI Z223.1-2012 and the Installation Standards, Warm Air Heating and Air Conditioning Systems ANSI/NFPA 90B.

  In Canada, CANADA: National Standard of Canada, Natural Gas and Propane Installation Code (NSCNGPIC) CSA B149.1-2010.

  Connect the furnace to the building piping by one of the following methods:

  – Rigid metallic pipe and fittings.

  – Semi-rigid metallic tubing and metallic fittings. Aluminum alloy tubing must not be used in exterior locations. In order to seal the grommet cabinet penetration, rigid pipe must be used to reach the outside of the cabinet. A semi-rigid connector to the gas piping may be used from there.
- Use listed gas appliance connectors in accordance with their instructions. Connectors must be fully in the same room as the furnace.
- Protect connectors and semirigid tubing against physical and thermal damage when installed. Ensure aluminum-alloy tubing and connectors are coated to protect against external corrosion when in contact with masonry, plaster, or insulation, or subjected to repeated wetting by liquids such as water (except rain water), detergents, or sewage.

Gas Piping Connections

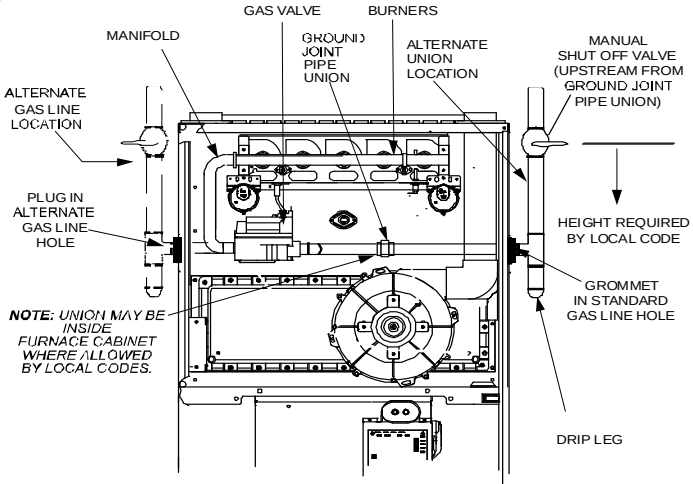

UPFLOW

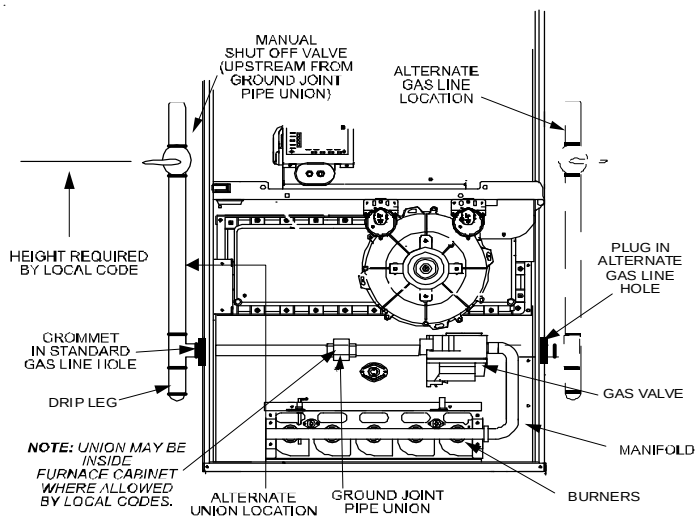

COUNTERFLOW

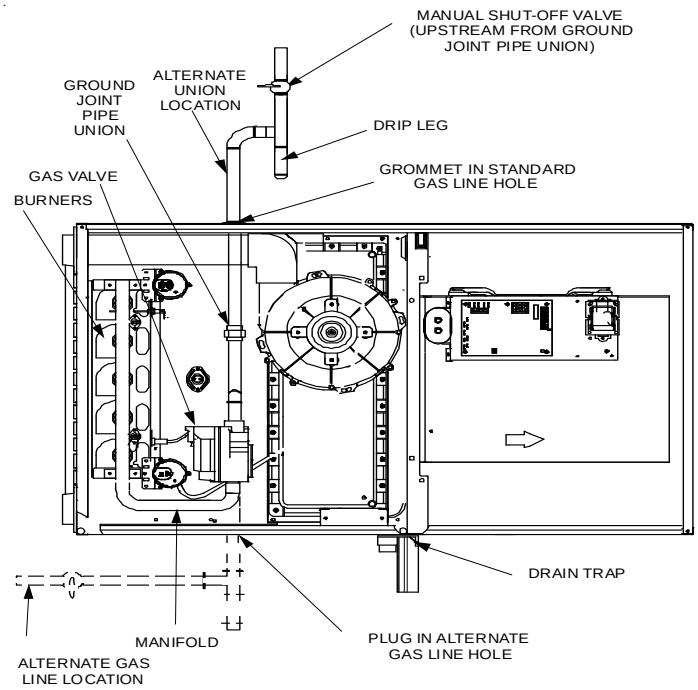

HORIZONTAL [UPFLOW MODEL]

NOTES:
1. WHEN GAS LINE IS IN THE ALTERNATE LOCATION, SWAP THE POSITION OF THE PLUG AND GROMMET.

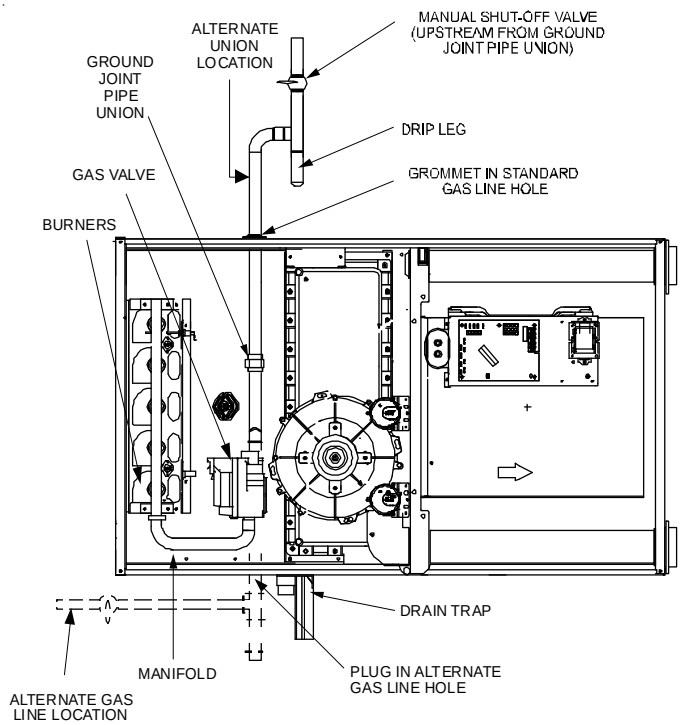

HORIZONTAL [COUNTERFLOW]

2. DRIP LEG MAY TERMINATE WITH A ½"X 1/8" PIPE PLUG TO ACCOMMODATE LINE GAS PRESSURE MEASUREMENT.

Direct/Standard Inlet Piping

WARNING

Edges of sheet metal holes may be sharp. Use gloves as a precaution when removing hole plugs.

When gas piping enters *directly* to the gas valve through the *standard* inlet hole, the installer must supply straight pipe with a ground joint union to reach the exterior of the furnace. The rigid pipe must be long enough to reach the outside of the cabinet to seal the grommet cabinet penetration. A semi-rigid connector to the gas piping can be used outside the cabinet per local codes.

Indirect/Alternate Inlet Piping

When gas piping enters *indirectly* to the gas valve through the *alternate* gas inlet hole the following fittings (starting from the gas valve) to reach the outside of the cabinet must be supplied:

- Close nipple.
- 90 degree elbow.
- 2½ inch nipple.
- Straight pipe, with a ground joint union, to reach the exterior of the furnace. The rigid pipe must be long enough to reach the outside of the cabinet so as to seal the grommet cabinet penetration. A semi-rigid connector to the gas piping can be used outside the cabinet per local codes.

Gas Piping Checks

Before placing unit in operation, leak test the unit and gas connections.

WARNING

To avoid the possibility of explosion or fire, never use a match or open flame to test for leaks.

Check for leaks using an approved chloride-free soap and water solution, an electronic combustible gas detector, or other approved testing methods.

NOTE: Never exceed specified pressures for testing. Higher pressure may damage the gas valve and cause subsequent overfiring, resulting in heat exchanger failure.

Disconnect this unit and shutoff valve from the gas supply piping system before pressure testing the supply piping system with pressures in excess of 1/2 psig (3.48 kPa).

Isolate this unit from the gas supply piping system by closing its external manual gas shutoff valve before pressure testing supply piping system with test pressures equal to or less than 1/2 psig (3.48 kPA).

Propane Gas Tanks and Piping

WARNING

If the gas furnace is installed in a basement, an excavated area or confined space, it is strongly recommended to contact a propane supplier to install a gas detecting warning device in case of a gas leak.

- **Since propane gas is heavier than air, any leaking gas can settle in any low areas or confined spaces.**
- **Propane gas odorant may fade, making the gas undetectable except with a warning device.**

A gas detecting warning system is the only reliable way to detect a propane gas leak. Rust can reduce the level of odorant in propane gas. Do not rely on your sense of smell. Contact a local propane gas supplier about installing a gas detecting warning system. If the presence of gas is suspected, follow the instructions listed in the *Safety Precautions* section of this manual.

All propane gas equipment must conform to the safety standards of the National Board of Fire Underwriters, NBFU Manual 58. CANADA: National Standard of Canada, Natural Gas and Propane Installation Code (NSCNGPIC) CSA B149.1—2010.

For satisfactory operation, propane gas pressure must be 10" WC ± .5" WC at the furnace manifold with all gas appliances in operation. Maintaining proper gas pressure depends on three main factors:

1. Vaporization rate, depending on temperature of the liquid, and "wetted surface" area of the container or containers.
2. Proper pressure regulation. (Two-stage regulation is recommended for both cost and efficiency).
3. Pressure drop in lines between regulators, and between second stage regulator and the appliance. Pipe size will depend on length of pipe run and total load of all appliances.

Complete information regarding tank sizing for vaporization, recommended regulator settings, and pipe sizing is available from most regulator manufacturers and propane gas suppliers.

Since propane gas will quickly dissolve white lead and most standard commercial compounds, special pipe dope must be used. Pipe dope used on propane gas installations must be approved for use with propane gas.

Refer to the following illustration for typical propane gas installations and piping.

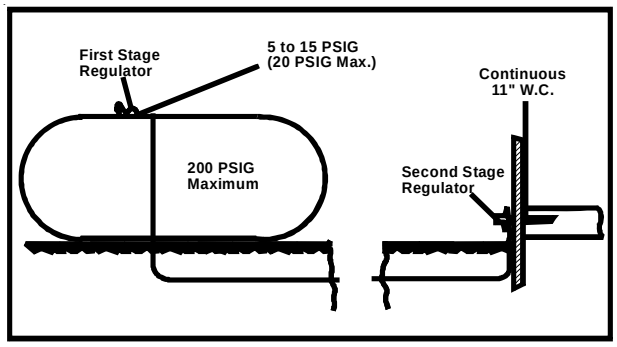

Propane Gas Installation (Typ.)

Sizing Between First and Second Stage Regulator*
Maximum Propane Capacities listed are based on 2 psig pressure drop at 10 psig setting.
Capacities in 1,000 BTU/hour.

Pipe or Tubing Length Feet	Tubing Size, O.D. Type L					Nominal Pipe Size Schedule 40	
	3/8"	1/2"	5/8"	3/4"	7/8"	1/2"	3/4"
10	730	1,700	3,200	5,300	8,300	3,200	7,500
20	500	1,100	220	3,700	5,800	2,200	4,200
30	400	920	2,000	2,900	4,700	1,800	4,000
40	370	850	1,700	2,700	4,100	1,600	3,700
50	330	770	1,500	2,400	3,700	1,500	3,400
60	300	700	1,300	2,200	3,300	1,300	3,100
80	260	610	1,200	1,900	2,900	1,200	2,600
100	220	540	1,000	1,700	2,600	1,000	2,300
125	200	490	900	1,400	2,300	900	2,100
150	190	430	830	1,300	2,100	830	1,900
175	170	400	780	1,200	1,900	770	1,700
200	160	380	730	1,100	1,800	720	1,500

To convert to capacities at 15 psig settings - multiply by 1.130
To convert to capacities at 5 psig settings - multiply by 0.879

Propane Gas Piping Chart I

Sizing Between Second or Second Stage Regulator & Appliance*
Maximum Propane Capacities listed are based on 1/2" W.C. pressure drop at 11" W.C. setting.
Capacities in 1,000 BTU/hour.

Pipe or Tubing Length Feet	Tubing Size, O.D. Type L					Nominal Pipe Size Schedule 40				
	3/8"	1/2"	5/8"	3/4"	7/8"	1/2"	3/4"	1"	1-1/4"	1-1/2"
10	39	92	199	329	501	275	567	1,071	2,205	3,307
20	26	62	131	216	346	189	393	732	1,496	2,299
30	21	50	107	181	277	152	315	590	1,212	1,858
40	19	41	90	145	233	129	267	504	1,039	1,559
50	18	37	79	131	198	114	237	448	913	1,417
60	16	35	72	1,211	187	103	217	409	834	1,275
80	13	29	62	104	155	89	185	346	724	1,066
100	11	26	55	90	138	78	162	307	630	976
125	10	24	48	81	122	69	146	275	567	866
150	9	21	43	72	109	63	132	252	511	787
200	8	19	39	66	100	54	112	209	439	665
250	8	17	36	60	93	48	100	185	390	590

*Data in accordance with NFPA pamphlet No. 54

Propane Gas Piping Chart II

Circulating Air & Filters

Ductwork - Air Flow

WARNING

Never allow the products of combustion, including carbon monoxide, to enter the return duct work or circulation air supply.

Duct systems and register sizes must be properly designed for the CFM and external static pressure rating of the furnace. Design the ductwork in accordance with the recommended methods of "Air Conditioning Contractors of America" Manual D.

Install the duct system in accordance with Standards of the National Board of Fire Underwriters for the Installation of Air Conditioning, Warm Air Heating and Ventilating Systems. Pamphlets No. 90A and 90B.

A closed return duct system must be used, with the return duct connected to the furnace. **NOTE:** Ductwork must never be attached to the back of the furnace. For upflow installations requiring 1800 CFM or more, use either two side returns or bottom return or a combination of side and bottom. Flexible joints may be used for supply and return connections to reduce noise transmission. To prevent the blower from interfering with combustion air or draft when a central return is used, a connecting duct must be installed between the unit and the utility room wall. Never use a room, closet, or alcove as a return air chamber.

Checking Duct Static

Refer to your furnace rating plate for the maximum ESP (external duct static) rating.

Total external static refers to everything external to the furnace cabinet. Cooling coils, filters, ducts, grilles, registers must all be considered when reading your total external static pressure. The supply duct pressure must be read between the furnace and the cooling coil. This reading is usually taken by removing the "A" shaped block off plate from the end on the coil; drilling a test hole in it and reinstalling the block off plate. Take a duct static reading at the test hole. Tape up the test hole after your test is complete. The negative pressure must be read between the filter and the furnace blower.

Excessive external static pressure will result in insufficient air which can cause excessive temperature rise. This can cause limit switch tripping and heat exchanger failure.

To determine total external duct static pressure, proceed as follows;

1. With clean filters in the furnace, use a draft gauge (inclined manometer) to measure the static pressure of the return duct at the inlet of the furnace. (Negative Pressure)
2. Measure the static pressure of the supply duct. (Positive Pressure)
3. The difference between the two numbers is your total external static pressure.

Example:

static reading from return duct = -0.1" W.C.

static reading from supply duct = +0.3" W.C.

total external static pressure on this system = 0.4" W.C.

NOTE: Both readings may be taken simultaneously and read directly on the manometer if so desired. If an air conditioner coil or Electronic Air Cleaner is used in conjunction with the furnace, the readings must also include these components, as shown in the following drawing.

4. Consult proper tables for the quantity of air.

If the total external static pressure exceeds the maximum listed on the furnace rating plate, check for closed dampers, registers, undersized and/or oversized poorly laid out duct work.

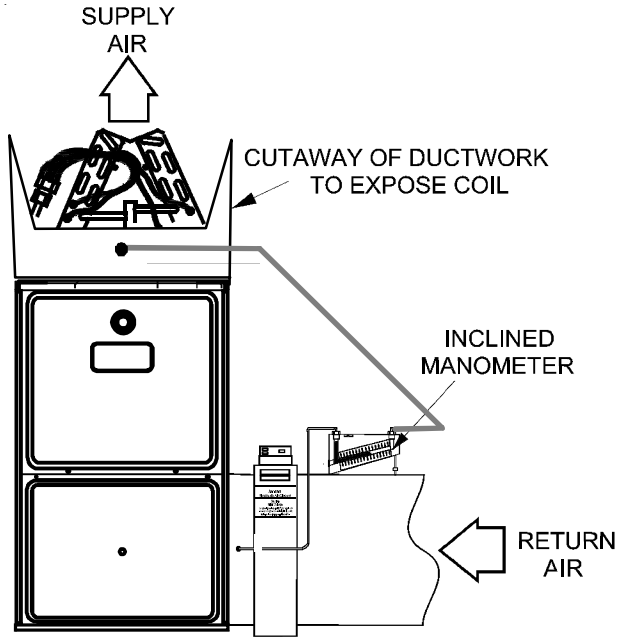

Checking Static Pressure

Bottom Return Air Opening [Upflow Models]

The bottom return air opening on upflow models utilizes a "lance and cut" method to remove sheet metal from the duct opening in the base pan. To remove, simply press out the lanced sections by hand to expose the metal strips retaining the sheet metal over the duct opening. Using tin snips, cut the metal strips and remove the sheet metal covering the duct opening. In the corners of the opening, cut the sheet metal along the scribe lines to free the duct flanges. Using the scribe line along the duct flange as a guide, bend the duct flanges around the perimeter of the opening using a pair of seamer pliers or seamer tongs. **NOTE:** Airflow area will be reduced by approximately 18% if duct flanges are not folded open. This could cause performance issues and noise issues.

WARNING

Edges of sheet metal holes may be sharp. Use gloves as a precaution when removing sheet metal from return air openings.

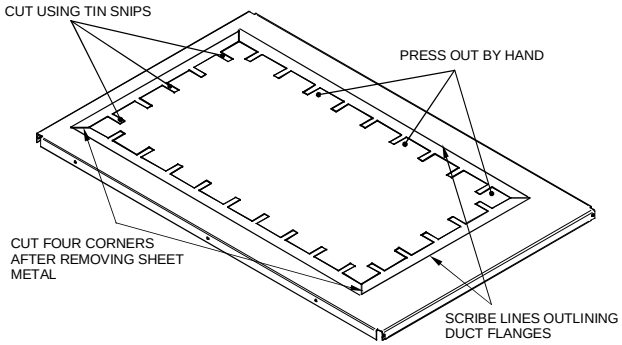

Duct Flange Cut Outs

When the furnace is used in connection with a cooling unit, the furnace should be installed in parallel with or on the upstream side of the cooling unit to avoid condensation in the heating element. With a parallel flow arrangement, the dampers or other means used to control the flow of air must be adequate to prevent chilled air from entering the furnace and, if manually operated, must be equipped with means to prevent operation of either unit unless the damper is in the full heat or cool position.

When the furnace is installed without a cooling coil, it is recommended that a removable access panel be provided in the supply air plenum. This opening shall be accessible when the furnace is installed and shall be of such a size that the heat exchanger can be viewed for visual light inspection or such that a sampling probe can be inserted into the airstream. The access panel must be sealed to prevent air leaks when the furnace is in operation.

When the furnace is heating, the temperature of the return air entering the furnace must be between 55°F and 100°F.

Filters - Read This Section Before Installing The Return Air Duct work

Filters must be used with this furnace. Discuss filter maintenance with the building owner. Filters do not ship with this furnace, but must be provided, sized and installed externally by the installer. Filters must comply with UL900 or CAN/ULCS111 standards. If the furnace is installed without filters, the warranty will be voided.

On upflow units, guide dimples locate the side return cutout locations. Use a straight edge to scribe lines connecting the dimples. Cut out the opening on these lines. **NOTE:** An undersized opening will cause reduced airflow.

Refer to Minimum Filter Area tables to determine filter area requirements.

		UPFLOW COOLING AIRFLOW REQUIREMENT (CFM)						
		600	800	1000	1200	1400	1600	2000
Input Airflow	0603__XA	---	---	627*	627*	672	768	---
	0805__XA	---	---	---	836*	836*	836*	960
	1005__XA 1155__XA	---	---	---	940*	940*	940*	960

		COUNTERFLOW COOLING AIRFLOW REQUIREMENT (CFM)						
		600	800	1000	1200	1400	1600	2000
Input Airflow	0604__XA	---	---	320*	320*	336	384	---
	0805__XA 1005__XA	---	---	---	427*	427*	427*	480

*Minimum filter area dictated by heating airflow requirement.

Permanent Minimum Filter Area (sq. in)

[Based on a 600 ft/min filter face velocity]

		UPFLOW COOLING AIRFLOW REQUIREMENT (CFM)						
		600	800	1000	1200	1400	1600	2000
Input Airflow	0603__XA	---	---	564*	564*	672	768	
	0805__XA	---	---	---	752*	752*	768	960
	1005__XA 1155__XA	---	---	---	940*	940*	940*	960

		COUNTERFLOW COOLING AIRFLOW REQUIREMENT (CFM)						
		600	800	1000	1200	1400	1600	2000
Input Airflow	0604__XA	---	---	641*	641*	672	768	---
	0805__XA 1005__XA	---	---	---	854*	854*	854*	960

*Minimum filter area dictated by heating airflow requirement.

Disposable Minimum Filter area (sq. in)

[Based on 300 ft/min filter face velocity]

UPRIGHT INSTALLATIONS

Depending on the installation and/or customer preference, differing filter arrangements can be applied. Filters can be installed in the central return register or a side panel external filter rack kit (upflows). As an alternative a media air filter or electronic air cleaner can be used as the requested filter.

The following figure shows possible filter locations.

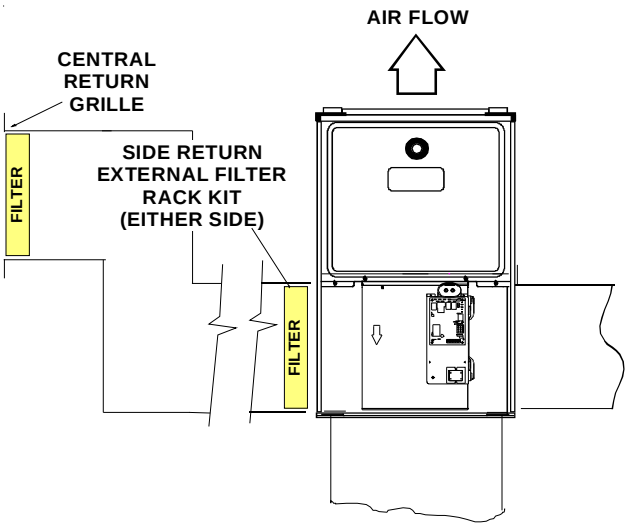

Possible Upright Upflow

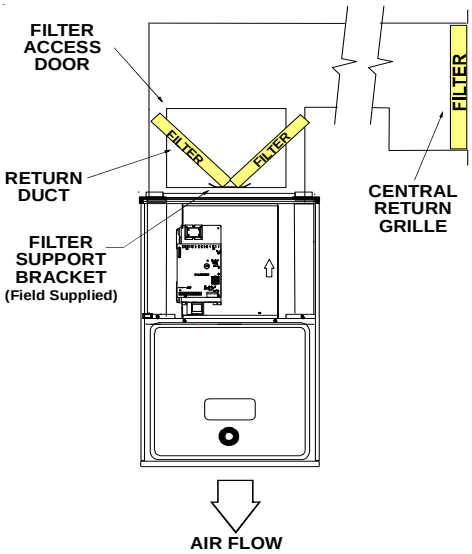

Possible Upright Counterflow Filter Locations

HORIZONTAL INSTALLATIONS

Filters must be installed in either the central return register or in the return air duct work.

STARTUP PROCEDURE & ADJUSTMENT

Furnace must have a 115 VAC power supply properly connected and grounded. Proper polarity must be maintained for correct operation. In addition to the following start-up and adjustment items, refer to further information in *Operational Checks* section.

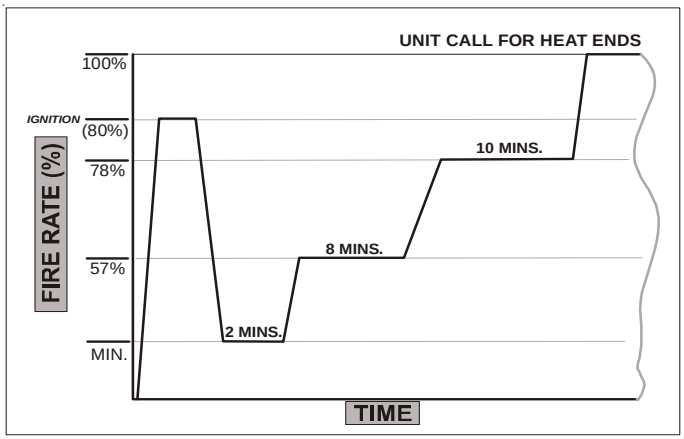

Operation with Conventional 1-Stage Thermostat (DIP switch selects 1-Stage heat)

Call for heat, thermostat energizes W1 on the furnace control board (W2 input is ignored).

After a successful Light Off Sequence and expiration of the Ignition Stabilization Period:

- The furnace control board adjusts the firing rate to 35% (low fire rate).
- After 2 minutes, the furnace control board increases the firing rate to 57% at a rate of 1% per second.
- After 10 total minutes, the furnace control board increases the firing rate to 78% at a rate of 1% per second.
- After 20 total minutes, the furnace control board increases to 100% at a rate of 1% per second for the remainder of the call for heat.
- The circulator fan is adjusted to the appropriate CFM, corresponding to the current firing rate.

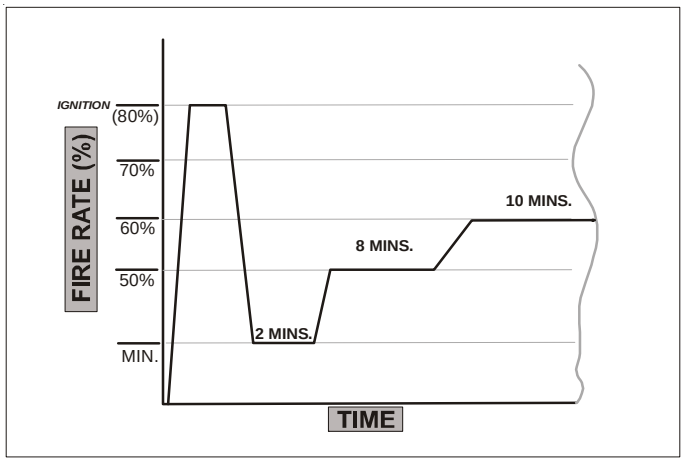

Operation with Conventional 2-Stage Thermostat (DIP switch selects 2-stage heat)

Call for 1st-Stage Heat - Thermostat contacts close R to W1.

After a successful Light Off Sequence and expiration of the Ignition Stabilization Period:

- The furnace control board adjusts to the low firing rate.
- After 2 minutes, the furnace control board increases the firing rate to 50% for the next 8 minutes.
- Thereafter, the furnace control board will increase the firing rate 10%, at a rate of 1% per second, every 10 minutes for the remainder of the call for heat (See above figure).
- The circulator fan is adjusted to the appropriate CFM, corresponding to the current firing rate.

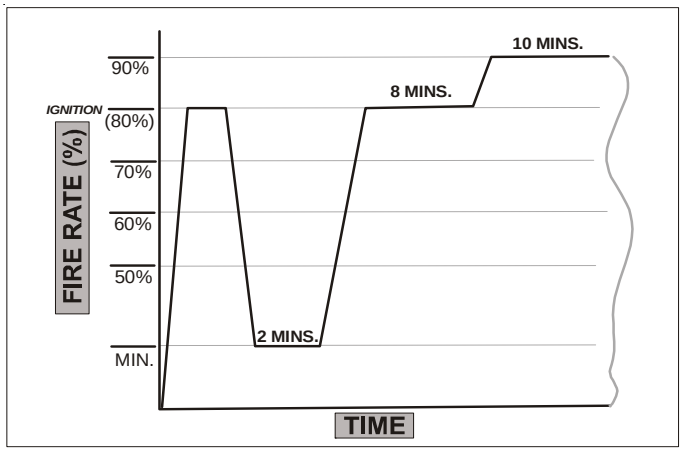

Operation with Conventional 2-Stage Thermostat (DIP switch selects 2-stage heat)

Call for 2nd-Stage Heat - Thermostat contacts close R to W1 and W2.

After a successful Light Off Sequence and expiration of the Ignition Stabilization Period:

- The furnace control board adjusts to the low firing rate of 35%.
- After 2 minutes, the furnace control board increases the firing rate to 80%.
- Thereafter, the IFC will increase the firing rate by 10%, at a rate of 1% per second, every 10 minutes for the remainder of the call for heat.
- The circulator fan is adjusted to the appropriate CFM, corresponding to the current firing rate.

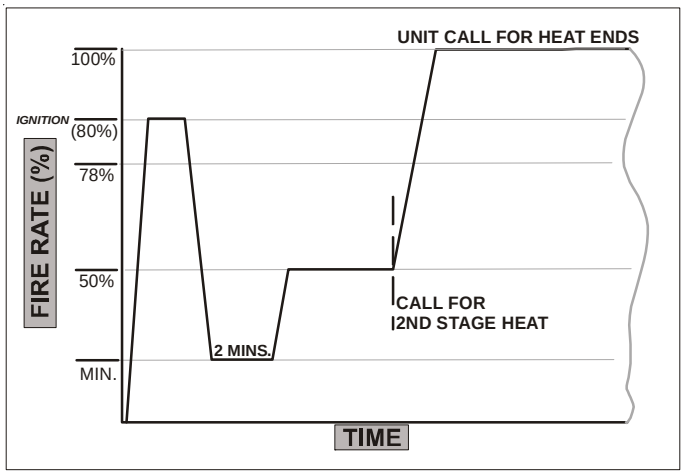

Call for 2nd-Stage Heat with 1st-Stage call for heat call in progress, with conventional 2-Stage Thermostat.

- The furnace control board increases the firing rate to 100% at a rate of 1% per second for the remainder of the W2 call.
- The circulator is adjusted to the appropriate CFM, corresponding to the current firing rate.

Call for 2nd-Stage Heat satisfied; Call for 1st-Stage Heat remains.

- The furnace control board remains at the current firing rate until the 1st-Stage call for heat is satisfied.

Heating Operation with CTK01 Thermostat (Communicating)

- When the Thermostat Heat Setup DIP switch is set to 2-Stage heat, the furnace control board operation will be compatible with a CTK01 communicating thermostat.
- When a call for heat is sent, the furnace will go through the Light Off Sequence, at which time the Heat Current Demand Status will still show 0%. After the successful Light Off Sequence and expiration of the Ignition Stabilization Period:
- The furnace control board adjusts to the low firing rate.
- After 2 minutes, the furnace control board accepts the specific heat requested demand.
- If the differential is equal to or less than 2 degrees, the furnace control board will follow the conventional 2-Stage algorithm, equivalent to a W1 request and be reflected in the heat current demand status %.
- If the heat differential is greater than 2 degrees, the furnace control board will follow the conventional 2-Stage algorithm, equivalent to a W2 request and be reflected in the heat current demand status %.
- The circulator will operate per the heat airflow profile.

Heating Operation with CTK02** & CTK03** Thermostat (Modulating Communicating)

- When the Thermostat Heat Setup DIP switch is set to 1-Stage heat, the furnace control board operation will be compatible with a modulating communicating thermostat (CTK02**).
- When a call for heat is sent, the furnace will go through the Light Off Sequence, at which time the Heat Current Demand Status will still show 0%. After the successful Light Off Sequence and expiration of the Ignition Stabilization Period:
- The furnace control board adjusts to the low firing rate.
- After 2 minutes, the furnace control board accepts the specific Heat Requested Demand.
- If the differential is 2 degrees or less, the heat current demand status will show 50%.
- If the specific heat requested demand is above 2 degrees, the heat current demand status will track the specific heat requested demand.
- The circulator fan will operate per the heat airflow profile.

Heat Anticipator Setting

The heat anticipator in the room thermostat must be correctly adjusted to obtain the proper number of cycles per hour and to prevent "overshooting" of the setting. Set the heat anticipator setting to 0.7 amps. Follow the thermostat manufacturer's instructions on how to adjust the heat anticipator setting.

Condensate Drain Trap Priming

The drain trap must be primed prior to furnace startup. To prime, fill the drain trap with water. This ensures proper furnace drainage upon startup and prohibits the possibility of flue gases escaping through the drain system. Air conditioning condensate may be drained into the furnace trap. Please see requirements in *Condensate Drain Lines & Drain Trap* section.

Furnace Operation

Purge gas lines of air prior to startup. Be sure not to purge lines into an enclosed burner compartment. Follow NFPA 54, National Fuel gas Code 8.3 for proper purging methods. In Canada, follow approved purging methods in B149.1.

Check for leaks using an approved chloride-free soap and water solution, an electronic combustible gas detector, or other approved method. Verify that all required kits (propane gas, etc.) have been appropriately installed.

Furnace Startup

1. Close the manual gas shutoff valve external to the furnace.
2. Turn off the electrical power to the furnace.
3. Set the room thermostat to the lowest possible setting.
4. Remove the burner compartment door.

NOTE: This furnace is equipped with an ignition device which automatically lights the burner. Do not try to light the burner by hand.

5. Move the furnace gas valve manual control to the OFF position.
6. Wait five minutes then smell for gas. Be sure to check near the floor as propane is heavier than air.
7. If you smell gas after five minutes, immediately follow the *Safety Considerations* on page 4 of this manual. If you do not smell gas after five minutes, move the furnace gas valve manual control to the ON position.
8. Replace the burner compartment door.
9. Open the manual gas shutoff valve external to the furnace.
10. Turn on the electrical power to the furnace.
11. Adjust the thermostat to a setting above room temperature.
12. After the burners are lit, set the thermostat to desired temperature.

Furnace Shutdown

1. Set the thermostat to the lowest setting.

   The integrated control will close the gas valve and extinguish flame. Following a 15 second delay, the induced draft blower will be de-energized. After a 120, 150, 180 or 210-second delay period (field selectable delay OFF [90, 120, 150, 180] plus 30-second ramp down), the circulator blower de-energizes.

2. Remove the burner compartment door and move the furnace gas valve manual control to the OFF position.
3. Close the manual gas shutoff valve external to the furnace.
4. Replace the burner compartment door.

Gas Supply Pressure Measurement

CAUTION

To prevent unreliable operation or equipment damage, the inlet gas supply pressure must be as specified on the unit rating plate with all other household gas fired appliances operating.

The line pressure supplied to the gas valve must be within the range specified in the *Inlet Gas Supply Pressure* table. The supply pressure can be measured at the gas valve inlet pressure tap or at a hose fitting installed in the gas piping drip leg. The supply pressure must be measured with the burners operating. To measure the gas supply pressure, use the following procedure:

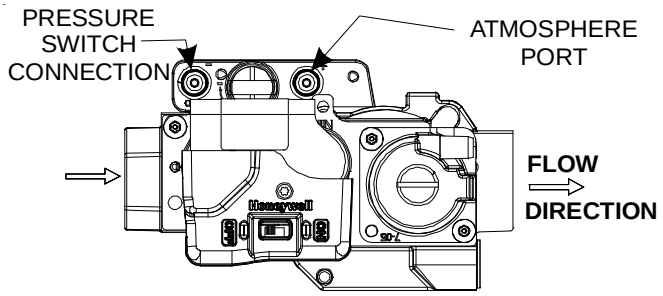

Honeywell Model VR9205R

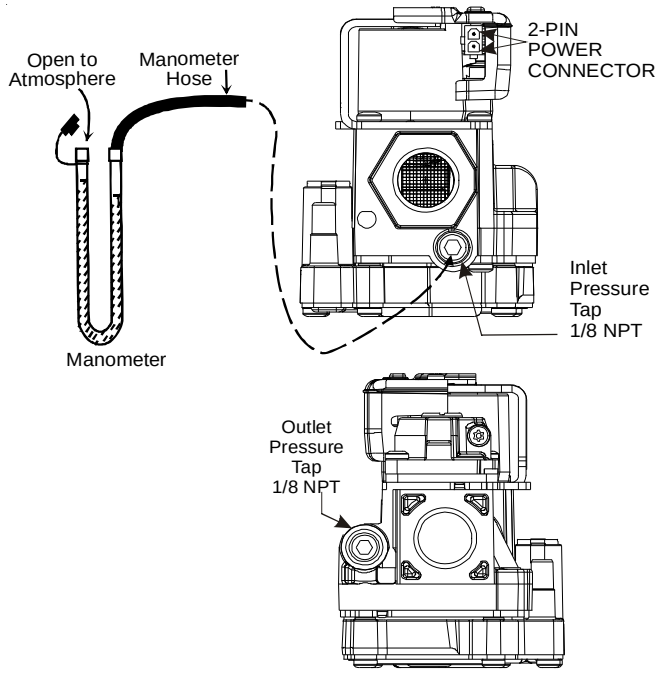

Honeywell Model VR9205R Connected to Manometer

1. Turn OFF gas to furnace at the manual gas shutoff valve external to the furnace.
2. Connect a calibrated water manometer (or appropriate gas pressure gauge) at either the gas valve inlet pressure tap or the gas piping drip leg. See Honeywell VR9205R gas valve figure for location of inlet pressure tap.

NOTE: If measuring gas pressure at the drip leg or Honeywell VR9205R gas valve, a field-supplied hose barb fitting must be installed prior to making the hose connection.

3. Turn ON the gas supply and operate the furnace and all other gas consuming appliances on the same gas supply line.

   NOTE: To bring furnace up to High Fire, see instructions for field test mode in **GAS MANIFOLD PRESSURE MEASUREMENT section.**

4. Measure furnace gas supply pressure with burners firing. Supply pressure must be within the range specified in the *Inlet Gas Supply Pressure* table.

Inlet Gas Supply Pressure		
Natural Gas	Minimum: 4.5" w.c.	Maximum: 10.0" w.c.
Propane Gas	Minimum: 11.0" w.c.	Maximum: 13.0" w.c.

If supply pressure differs from table, make the necessary adjustments to pressure regulator, gas piping size, etc., and/or consult with local gas utility.

5. Turn OFF gas to furnace at the manual shutoff valve and disconnect manometer. Reinstall threaded plug before turning on gas to furnace.
6. Turn OFF any unnecessary gas appliances stated in step 3.

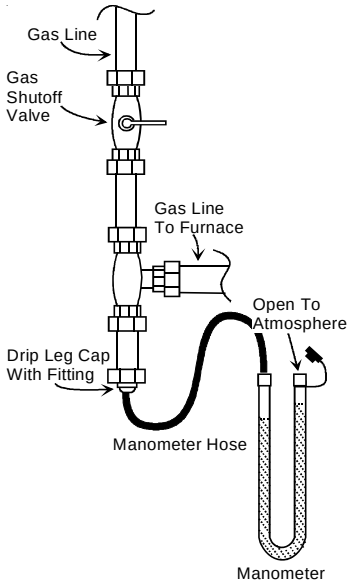

Measuring Inlet Gas Pressure (Alt. Method)

Gas Manifold Pressure Measurement

CAUTION

To prevent unreliable operation or equipment damage, the gas manifold pressure must be as specified on the unit rating plate. Gas valve is factory set and does NOT require any field adjustment. Do not attempt to adjust valve.

The manifold pressure must be measured with the burners operating. To measure the manifold pressure, use the following procedure:

1. Turn OFF gas to furnace at the manual gas shutoff valve external to the furnace.
2. Turn off all electrical power to the system.
3. Outlet pressure tap connections: Remove the outlet pressure tap plug. Install an 1/8" NPT hose barb fitting into the outlet pressure tap. Refer to gas valve diagram on preceding page.
4. Attach a hose and manometer to the outlet pressure barb fitting.
5. Turn ON the gas supply.
6. Turn on power and close thermostat "R" and "W1" contacts to provide a call for low stage heat.
7. Modulating furnaces light at 80% of max input. For natural gas, the expected manifold pressure at ignition will be in a range of 1.8" - 2.5" W.C. For LP gas, the range will be 5.8" - 6.8" W.C.

   NOTE: Measure the gas manifold pressure with the burners firing. After every time the main power is turned off and back on, the furnace will enter a calibration routine on the next call for heat *The inducer will ramp up and down during the calibration routine. After calibration, the furnace will proceed to ignition cycle.*
8. Field Test Mode is intended to help a service person troubleshoot and check out an installed appliance by bringing the furnace up to High fire (100% input), bypassing the normal modulating routing.

   To enter Field Test Mode the Fault Recall Push-Button must be pressed twice within a 5 second period at any time during a heating cycle, at which time the display will show "Ft". While the display is showing "Ft", pressing and holding the Fault Recall Push-Button for 3 seconds will enable the field test mode and override the normal firing rate sequence at a rate of 100% for 5 minutes or until the end of the call for heat. The display will show the normal "Hi" while the control is firing at 100%. If the Fault Recall Push-Button has not been pressed within 5 seconds of displaying "Ft" the display will revert back to normal.

   NOTE: Gas valve is factory set and does NOT require any field adjustment. Do NOT attempt to adjust valve.
9. Turn off all electrical power and gas supply to the system.
10. Remove the manometer hose from the hose barb fitting.
11. Remove the 1/8" NPT hose barb fitting from the outlet pressure tap. Replace the outlet pressure tap plug and seal with a high quality thread sealer.
12. Turn on electrical power and gas supply to the system.
13. Close thermostat contacts "R" and "W1/W2" to energize the valve.

Using an approved liquid gas leak detector solution, check for leaks at outlet pressure tap plug. Bubbles forming indicate a leak. SHUT OFF GAS AND REPAIR ALL LEAKS IMMEDIATELY!

Manifold Gas Pressure			
Gas		Range	Nominal
Natural	High Stage	3.2 - 3.8" w.c.	3.5" w.c.
Propane	High Stage	9.5 - 10.5" w.c.	10.0" w.c.

Gas Input Rate Measurement (Natural Gas Only)

The gas input rate to the furnace must never be greater than that specified on the unit rating plate. To measure natural gas input using the gas meter, use the following procedure.

1. Turn OFF the gas supply to all other gas-burning appliances except the furnace.
2. While the furnace is operating at high fire rate, time and record one complete revolution of the smallest gas meter dial.
3. Calculate the number of seconds per cubic foot (sec/ft^3) of gas being delivered to the furnace. If the dial is a one cubic foot dial, divide the number of seconds recorded in step 2 by one. If the dial is a two cubic foot dial, divide the number of seconds recorded in step 2 by two.
4. Calculate the furnace input in BTUs per hour (BTU/hr). Input equals the sum of the installation's gas heating value and a conversion factor (hours to seconds) divided by the number of seconds per cubic foot. The measured input must not be greater than the input indicated on the unit rating plate.

   EXAMPLE:

   Heating value of natural gas supplied, typically 1,000 BTUH CU FT: *(exact heating value may be obtained from your gas provider)*

   1,000 BTU/ft^3 (Obtained from gas supplier)

   Installation's seconds per cubic foot: 34 sec/ ft^3

   Conversion Factor (hours to seconds): 3600 sec/hr

   Input = (Htg. value x 3600) ÷ seconds per cubic foot

   Input = (1,000 BTU/ft^3 x 3600 sec/hr) ÷ 34 sec/ ft^3

   Input = 106,000 BTU/hr

NOTE: The final manifold pressure cannot vary by more than ± 0.3" w.c. for Natural and ± 0.5" for LP from the specified setting. Consult your local gas supplier if additional input rate adjustment is required.

5. Turn ON gas to and relight all other appliances turned off in step 1. Be certain that all appliances are functioning properly and that all pilot burners are operating.

Temperature Rise

Temperature rise must be within the range specified on the unit rating plate. An incorrect temperature rise may result in condensing in or overheating of the heat exchanger. An airflow and temperature rise table is provided in the Specification Sheet applicable to your model. Determine and adjust temperature rise as follows:

1. Operate furnace with burners firing for approximately ten minutes. Ensure all registers are open and all duct dampers are in their final (fully or partially open) position.
2. Place thermometers in the return and supply ducts as close to the furnace as possible. Thermometers must not be influenced by radiant heat by being able to "see" the heat exchanger.
3. Subtract the return air temperature from the supply air temperature to determine the air temperature rise. Allow adequate time for thermometer readings to stabilize.
4. Adjust temperature rise by adjusting the circulator blower speed. Increase blower speed to reduce temperature rise. Decrease blower speed to increase temperature rise. Refer to *Startup Procedure and Adjustment - Circulator Blower Speeds* for speed changing details.

Temperature Rise Range (°)	
DM96MC0603BX	20 - 50
DM96MC0805CX	35 - 65
DM96MC1005DX	35 - 65
DM96MC1155DX	35 - 65
DC96MC0604CX	20 - 50
DC96MC0805DX	20 - 50
DC96MC1005DX	25 - 55

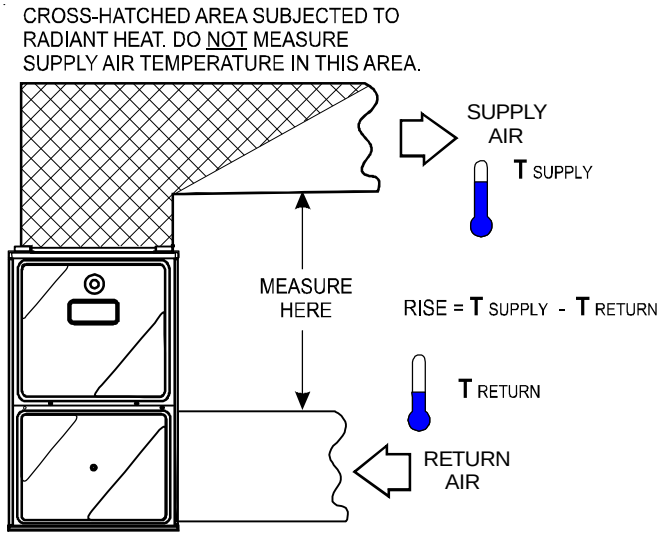

Temperature Rise Measurement

Circulator Blower Speeds

WARNING

To avoid personal injury or death due to electrical shock, turn OFF power to the furnace before changing speed taps.

This furnace is equipped with an ECM circulator blower. The heating blower speed is shipped set at "B", and the cooling blower speed setting is "D". These blower speeds should be adjusted by the installer to match the installation requirements so as to provide the correct heating temperature rise and correct cooling CFM.

Use the dual 7-segment LED display adjacent to the DIP switches to obtain the approximate airflow quantity. The airflow quantity is displayed as a number on the display, rounded to the nearest 100 CFM. The display alternates airflow delivery indication and the operating mode indication.

Example: The airflow being delivered is 1225 CFM. The display indicates 12. If the airflow being delivered is 1275, the display indicates 13.

1. Determine the tonnage of the cooling system installed with the furnace. If the cooling capacity is in BTU/hr divide it by 12,000 to convert capacity to TONs.

   Example: Cooling Capacity of 30,000 BTU/hr.
   30,000/12,000 = 2.5 Tons
2. Determine the proper air flow for the cooling system. Most cooling systems are designed to work with air flows between 350 and 450 CFM per ton. Most manufacturers recommend an air flow of about 400 CFM per ton.

   Example: 2.5 tons X 400 CFM per ton = 1000 CFM

The cooling system manufacturer's instructions must be checked for required air flow. Any electronic air cleaners or other devices may require specific quantity of air, consult installation instructions of those devices for requirements.

3. Knowing the furnace model, locate the high stage cooling air flow table. Look up the cooling air flow determined in step 2 and find the required cooling speed and adjustment setting.

   Example: A DM96MC0603BX furnace installed with a 2.5 ton air conditioning system. The air flow needed is 1000 CFM. Looking at the cooling speed chart for DM96MC0603BX, find the air flow closest to 1000 CFM. A cooling airflow of 1000 CFM can be attained by selecting the cooling speed "C" and the adjustment to "normal".

Model	Tap	Low Stage Cool	High Stage Cool	100% Heat *CFM
DC96MC0604CX	A	370	660	1220
	B	540	860	1340
	C	790	1150	1460
	D	980	1470	1590
DC96MC0805DX	A	530	900	1600
	B	730	1100	1710
	C	930	1430	1800
	D	1220	1880	1910
DC96MC1005DX	A	500	780	1730
	B	740	1070	1770
	C	920	1380	1840
	D	1160	1780	1870
DM96MC0603BX	A	390	630	950
	B	550	800	1050
	C	680	1000	1170
	D	800	1210	1270
DM96MC0805CX	A	540	830	1600
	B	750	1090	1690
	C	980	1460	1800
	D	1210	1800	1890
DM96MC1005DX	A	510	790	1810
	B	710	1100	1850
	C	910	1410	1890
	D	1160	1830	1940
DM96MC1155DX	A	510	790	1810
	B	710	1100	1850
	C	910	1410	1890
	D	1160	1830	1940

*100% CFM shown. CFM will vary proportionally with the gas valve BTU/H input.

4. Continuous fan speed is selectable at 25%, 50%, 75% or 100% of the furnace's maximum airflow capability.

   Example: If the furnace's maximum airflow capability is 2000 CFM, the continuous fan speed at 25% will be 0.25 x 2000 or 500 CFM.

5. Locate the blower speed selection DIP switches on the integrated control module. Select the desired "cooling" speed tap by positioning switches 1 and 2 appropriately. Select the desired "adjust" tap by positioning switches 9 and 10 appropriately. Refer to the DIP switch chart for switch positions and their corresponding taps. Verify CFM by noting the number displayed on the dual 7-segment LED display.
6. The multi-speed circulator blower also offers several custom ON/OFF ramping profiles for cooling. These profiles may be used to enhance cooling performance and increase comfort level. The ramping profiles are selected using DIP switches 7 and 8. Refer to the bullet points below for a description of each ramping profile. Verify CFM by noting the number displayed on the dual 7-segment LED display.

- **Profile A** provides only an OFF delay of one (1) minute at 100% of the cooling demand airflow.

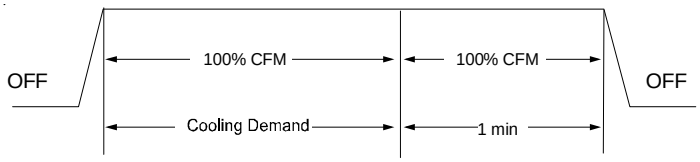

- **Profile B** ramps up to full cooling demand airflow by first stepping up to 50% of the full demand for 30 seconds. The motor then ramps to 100% of the required airflow. A one (1) minute OFF delay at 100% of the cooling airflow is provided.

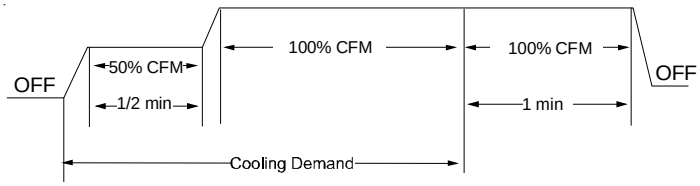

- **Profile C** ramps up to 85% of the full cooling demand airflow and operates there for approximately 7 1/2 minutes. The motor then steps up to the full demand airflow. Profile C also has a one (1) minute 100% OFF delay.

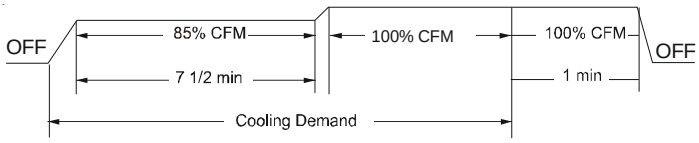

- **Profile D** ramps up to 50% of the demand for 1/2 minute, then ramps to 85% of the full cooling demand airflow and operates there for approximately 7 1/2 minutes. The motor then steps up to the full demand airflow. Profile D has a 1/2 minute at 50% airflow OFF delay.

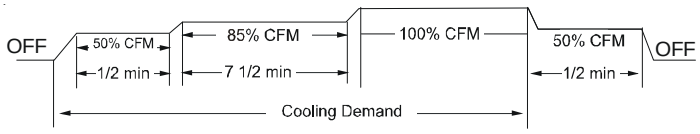

Airflow Table

7. Select the heating speed for your model from the heating speed table in this manual. The "adjust" setting (already established by the cooling speed selection) determines which set of speeds are available. The selected speed must provide a temperature rise within the rise range listed with the particular model.
8. Select the desired "heating" speed tap by positioning switches 3 and 4 appropriately. Refer to the airflow table. Verify CFM by noting the number displayed on the dual 7-segment LED display.

In general lower heating speeds will: reduce electrical consumption, lower operating sound levels of the blower, and increase the outlet air temperature delivered to the home. The speeds available allow the blower performance to be optimized for the particular needs of the installation.

Blower Heat Off Delay Timings

The integrated control module provides a selectable heat off delay function. The heat off delay period may be set to 90, 120, 150, 180 seconds using the DIP switches or jumper provided on the control module. The delay is factory shipped at 150 seconds but may be changed to suit the installation requirements and/or homeowner preference. Refer to the DIP switch chart in the back section of this manual for switch positions and corresponding delay times.

ComfortNet™ System

Overview

NOTE: *DIP switch #13* ***MUST*** *be set to match thermostat type. To use the CTK01 communicating thermostat, DIP switch #13 must be set to ON position. This is also the correct setting for a non-communicating 2-stage thermostat. To use the CTK02** or CTK03 modulating thermostat, check to make sure DIP switch #13 is in the OFF position (factory position). This is also the correct position when using a non-communicating single stage thermostat.*

The ComfortNet system is a system that includes a ComfortNet compatible furnace and air conditioner or heat pump with a CTK0* thermostat. A valid ComfortNet system could also be a compatible furnace, CTK0* thermostat and non-compatible, single stage air conditioner. Any other system configurations are considered invalid ComfortNet systems and must be connected as a traditional (or non-communicating) system (*see Electrical Connections* for wiring connections).

A ComfortNet heating/air conditioning system differs from a non-communicating/traditional system in the manner in which the indoor unit, outdoor unit and thermostat interact with one another. In a traditional system, the thermostat sends commands to the indoor and outdoor units via analog 24 VAC signals. It is a one-way communication path in that the indoor and outdoor units typically do not return information to the thermostat.

The indoor unit, outdoor unit and thermostat comprising a ComfortNet system "communicate" digitally with one another, creating a two-way communications path. The thermostat still sends commands to the indoor and outdoor units. However, the thermostat may also request and receive information from both the indoor and outdoor units. This information may be displayed on the ComfortNet thermostat. The indoor and outdoor units also interact with one another. The outdoor unit may send commands to or request information from the indoor unit. This two-way digital communications between the thermostat and subsystems (indoor/outdoor unit) is the key to unlocking the benefits and features of the ComfortNet system.

Two-way digital communications is accomplished using only two wires. The thermostat and subsystem controls are powered with 24 VAC. Thus, a maximum of 4 wires between the equipment and thermostat is all that is required to operate the system.

Airflow Considerations

Airflow demands are managed differently in a communicating system than they are in a non-communicating wired system. The system operating mode (as determined by the thermostat) determines which unit calculates the system airflow demand. If the furnace is responsible for determining the airflow demand, it calculates the demand and sends it to the ECM motor. If the outdoor unit or thermostat is responsible for determining the demand, it calculates the demand and transmits the demand along with a fan request to the indoor unit. The furnace then sends the demand to the ECM motor. The following table lists the various ComfortNet systems, the operating mode, and airflow demand source.

System	System Operating Mode	Airflow Demand Source
Air Conditioner + Furnace	Cooling	Air Conditioner
	Heating	Furnace
	Continuous Fan	Thermostat
Heat Pump + Furnace	Cooling	Heat Pump
	Heat Pump Heating Only	Heat Pump
	Auxiliary Heating	Furnace
	Continuous Fan	Thermostat
Furnace + Non-Comm 1stg Air Conditioner	Cooling	Furnace
	Heating	Furnace
	Continuous Fan	Thermostat

For example, assume the system is an air conditioner matched with a furnace. With a call for low stage cooling, the air conditioner will calculate the system's low stage cooling airflow demand. The air conditioner will then send a fan request along with the low stage cooling airflow demand to the furnace. Once received, the furnace will send the low stage cooling airflow demand to the ECM motor. The ECM motor then delivers the low stage cooling airflow. See the applicable ComfortNet air conditioner or heat pump installation manual for the airflow delivered during cooling or heat pump heating.

In continuous fan mode, the CTK0* thermostat provides the airflow demand. The thermostat may be configured for one of three continuous fan speed settings allow for 25%, 50% or 75% airflow, based on the furnaces' maximum airflow capability. During continuous fan operation, the thermostat sends a fan request along with the continuous fan demand to the furnace. The furnace, in turn, sends the demand to the ECM motor. The ECM motor delivers the requested continuous fan airflow.

Fossil Fuel Applications

This furnace can be used in conjunction with a ComfortNet™ compatible heat pump in a fossil fuel application. A fossil fuel application refers to a combined gas furnace and heat pump installation which uses an outdoor temperature sensor to determine the most cost efficient means of heating (heat pump or gas furnace). When used with the CTK0* thermostat, the furnace/heat pump system is automatically configured as a fossil fuel system. The balance point temperature may be adjusted via the CTK0* thermostat advanced user menus (see CTK0* instructions for additional information).

CTK0* Wiring

NOTE: Refer to *Electrical Connections* for 115 volt line connections to the furnace.

NOTE: A removable plug connector is provided with the control to make thermostat wire connections. This plug may be removed, wire connections made to the plug, and replaced. It is **strongly** recommended that multiple wires into a single terminal be twisted together prior to inserting into the plug connector. Failure to do so may result in intermittent operation.

Typical 18 AWG thermostat wire may be used to wire the system components. One hundred (100) feet is the maximum length of wire between indoor unit and outdoor unit, or between indoor unit and thermostat. Wire runs over (100) feet require larger gauge wire.

Four-Wire Indoor and Outdoor Wiring

Typical ComfortNet™ wiring will consist of four wires between the indoor unit and outdoor unit and between the indoor unit and thermostat. The required wires are: (a) data lines, 1 and 2; (b) thermostat "R" (24 VAC hot) and "C" (24 VAC common).

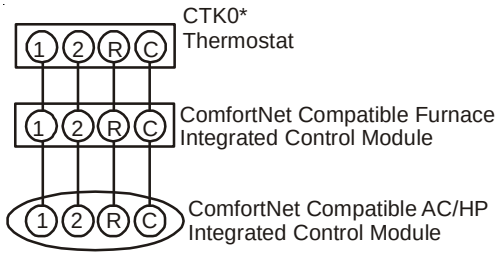

System Wiring using Four-Wires

Two-Wire Outdoor, Four-Wire Indoor Wiring

As few as two wires can be utilized between the indoor and outdoor units. For this wiring scheme, only the data lines, 1 and 2, are needed between the indoor and outdoor units. A 40VA, 208/230 VAC to 24VAC transformer must be installed in the outdoor unit to provide 24VAC power to the outdoor unit's electronic control. The transformer is included in selected communicating thermostat kits. See kit instructions for mounting and wiring instructions. Four wires are required between the indoor unit and thermostat. If using a communicating thermostat kit that does not include a transformer in a dual fuel system, the accessory transformer kit TFK01 should be used.

NOTE: Use of the accessory transformer is recommended if installing a dual fuel/fossil fuel system. Failure to use the transformer in the outdoor unit could result in over loading of the furnace transformer.

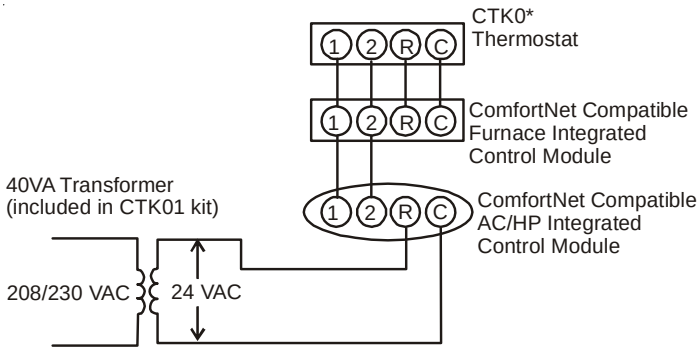

System Wiring using Two-Wires between Furnace and AC/HP and Four-Wires between Furnace and Thermostat

ComfortNet Compatible Furnace with Non-ComfortNet compatible Single-Stage Air Conditioner

Four wires are required between the furnace and thermostat. Two wires are required between the furnace control and single stage air conditioner. For this system configuration, the "Y1" terminal on the integrated furnace control becomes an output rather than an input. The "Y1" connection to the outdoor unit is made using both of the 4-position thermostat connectors in the CTK0* kit. Remove the red keying tabs from the on-board connector block and position both 4-position connector such that "1", "2", "R", "C", and "Y1" positions are filled.

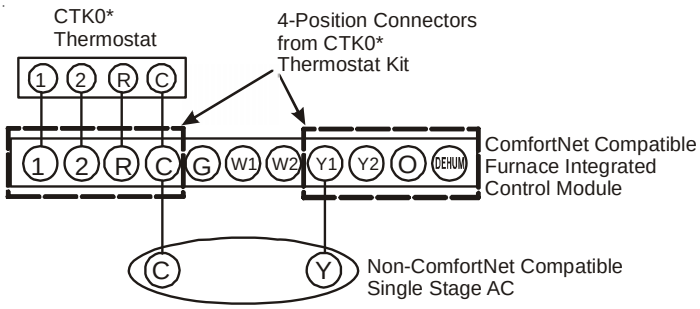

System Wiring between Furnace and Non-Communicating Compatible Single Stage Air Conditioner

ComfortNet™ System Advanced Features

The ComfortNet system permits access to additional system information, advanced setup features, and advanced diagnostic/troubleshooting features. These advanced features are organized into a menu structure. The menus are accessed and navigated as described in the instructions provided with the communicating control.

Switch Bank	Purpose	Function	DIP Switch 1	2	3	4	5	6	7	8	9	10	11	12	13	14	15	16	17	18
1	Cooling Speed Tap	A	OFF	OFF	---	---	---	---	---	---	---	---	---	---	---	---	---	---	---	---
		B	ON	OFF	---	---	---	---	---	---	---	---	---	---	---	---	---	---	---	---
		C	OFF	ON	---	---	---	---	---	---	---	---	---	---	---	---	---	---	---	---
		D	**ON**	**ON**	---	---	---	---	---	---	---	---	---	---	---	---	---	---	---	---
	Heating Speed Tap	A	---	---	OFF	OFF	---	---	---	---	---	---	---	---	---	---	---	---	---	---
		B	---	---	**ON**	**OFF**	---	---	---	---	---	---	---	---	---	---	---	---	---	---
		C	---	---	OFF	ON	---	---	---	---	---	---	---	---	---	---	---	---	---	---
		D	---	---	ON	ON	---	---	---	---	---	---	---	---	---	---	---	---	---	---
	Continuous Fan Speed Tap	A	---	---	---	---	OFF	OFF	---	---	---	---	---	---	---	---	---	---	---	---
		B	---	---	---	---	**ON**	**OFF**	---	---	---	---	---	---	---	---	---	---	---	---
		C	---	---	---	---	OFF	ON	---	---	---	---	---	---	---	---	---	---	---	---
		D	---	---	---	---	ON	ON	---	---	---	---	---	---	---	---	---	---	---	---
2	Cooling Ramping	A	---	---	---	---	---	---	**OFF**	**OFF**	---	---	---	---	---	---	---	---	---	---
		B	---	---	---	---	---	---	ON	OFF	---	---	---	---	---	---	---	---	---	---
		C	---	---	---	---	---	---	OFF	ON	---	---	---	---	---	---	---	---	---	---
		D	---	---	---	---	---	---	ON	ON	---	---	---	---	---	---	---	---	---	---
	Adjust Taps	0 Trim Adjust	---	---	---	---	---	---	---	---	**OFF**	**OFF**	---	---	---	---	---	---	---	---
		Plus 10%	---	---	---	---	---	---	---	---	ON	OFF	---	---	---	---	---	---	---	---
		Minus 10%	---	---	---	---	---	---	---	---	OFF	ON	---	---	---	---	---	---	---	---
		0 Trim Adjust	---	---	---	---	---	---	---	---	ON	ON	---	---	---	---	---	---	---	---
	Heat Off Delay	90 Seconds	---	---	---	---	---	---	---	---	---	---	OFF	OFF	---	---	---	---	---	---
		120 Seconds	---	---	---	---	---	---	---	---	---	---	ON	OFF	---	---	---	---	---	---
		150 Seconds	---	---	---	---	---	---	---	---	---	---	**OFF**	**ON**	---	---	---	---	---	---
		180 Seconds	---	---	---	---	---	---	---	---	---	---	ON	ON	---	---	---	---	---	---
3	T-Stat Heat	1 Stage Stat*	---	---	---	---	---	---	---	---	---	---	---	---	**OFF**	---	---	---	---	---
		2 Stage Stat**	---	---	---	---	---	---	---	---	---	---	---	---	ON	---	---	---	---	---
	Compressor	1-Stage Compressor	---	---	---	---	---	---	---	---	---	---	---	---	---	**OFF**	---	---	---	---
		2-Stage Compressor	---	---	---	---	---	---	---	---	---	---	---	---	---	ON	---	---	---	---
	Dehum	Disabled	---	---	---	---	---	---	---	---	---	---	---	---	---	---	**OFF**	---	---	---
		Enabled	---	---	---	---	---	---	---	---	---	---	---	---	---	---	ON	---	---	---
	Bias	Disabled	---	---	---	---	---	---	---	---	---	---	---	---	---	---	---	OFF	---	---
		Enabled	---	---	---	---	---	---	---	---	---	---	---	---	---	---	---	**ON**	---	---
	Pull Up	Disabled	---	---	---	---	---	---	---	---	---	---	---	---	---	---	---	---	OFF	---
		Enabled	---	---	---	---	---	---	---	---	---	---	---	---	---	---	---	---	**ON**	---
	Pull Down	Disabled	---	---	---	---	---	---	---	---	---	---	---	---	---	---	---	---	---	OFF
		Enabled	---	---	---	---	---	---	---	---	---	---	---	---	---	---	---	---	---	**ON**

--- Not applicable

(Indicates factory setting)

* or CTK02, CTK03

** or CTK01

Communicating thermostats are used only with Bias, Pull Up, Pull Down dip switches.

NON-COMM (APPLIES ONLY TO A COMMUNICATING COMPATIBLE FURNACE MATCHED WITH A NON-COMMUNICATING COMPATIBLE SINGLE STAGE AIR CONDITIONER)		
Submenu Item	**User Modifiable Options**	**Comments**
Cool Airflow (CL CFM)	18, 24, 30, 36, 42, 48, or 60, default is 18	Selects the airflow for the non-communicating compatible single stage AC unit
Cool Airflow Trim (CL TRM)	-15% to +15% in 3% increments, default is 0%.	Selects the airflow trim amount for the non-communicating compatible single stage AC unit
Cool Airflow Profile (CL PRFL)	A, B, C, or D, default is A	Selects the airflow profile for the non-communicating compatible single stage AC unit
Cool ON Delay (CL ON)	5, 10, 20, or 30 seconds, default is 5 seconds	Selects the indoor blower ON delay for the non-communicating compatible single stage AC unit
Cool OFF Delay (CL OFF)	30, 60, 90, or 120 seconds, default is 30 seconds	Selects the indoor blower OFF delay for the non-communicating compatible single stage AC unit

Thermostat Menu

If this furnace is installed with a communicating compatible heat pump, the system is recognized as a dual fuel system. The balance point temperature should be set via the thermostat advanced menu. Navigate to the **THERMOSTAT** menu. Press the **INSTALLER CONFIG** key. Navigate to the **SETUP** menu and press the **INSTALLER CONFIG** button. *See communicating thermostat installation instructions for additional information.* Navigate to **dF BAL PNT**. Adjust the dual fuel system balance point using the back/forward arrows.

Diagnostics

Accessing the furnace's diagnostics menu provides ready access to the last ten faults detected by the furnace. Faults are stored most recent to least recent. Any consecutively repeated fault is stored a maximum of three times. Example: A clogged return air filter causes the furnace limit to trip repeatedly. The control will only store this fault the first three *consecutive* times the fault occurs. Navigate to the diagnostics menu as described above in *Accessing and Navigating the Advanced Features Menus*.

NOTE: It is highly recommended that the fault history be cleared when performing maintenance or servicing the furnace.

Network troubleshooting

The indoor control is equipped with a bank of three DIP switches that provide biasing and termination functions for the communications transmission lines. The outdoor control in the communicating compatible unit is equipped with a bank of two DIP switches that provide termination functions for the communications transmission lines. Communications errors will result if these switches are not correctly set. Note that the ON position is the correct position for all bias and pull up/pull down DIP switches.

The ComfortNet™ system is a fully communicating system, and thus, constitutes a network. Occasionally the need to troubleshoot the network may arise. The furnace control board has some on-board tools that may be used to troubleshoot the network. These tools are: red communications LED, green receive (Rx) LED, and learn button.

- Red communications LED – Indicates the status of the network. The table below indicates the LED status and the corresponding potential problem.
- Green receive LED – Indicates network traffic. The table below indicates the LED status and the corresponding potential problem.
- Learn button – Used to reset the network. Depress the button for approximately 2 seconds to reset the network.

System Troubleshooting

NOTE: Refer to the instructions accompanying the ComfortNet compatible outdoor AC/HP unit for troubleshooting information.

Refer to the *Troubleshooting Codes* for a listing of possible furnace error codes, possible causes and corrective actions.

Fault Recall Sequence

- Only allowed in standby mode while display is showing ON.
- Hold fault recall push-button for 2-5 seconds (until display is blank) and then release.
- Display will then be blank for 2 seconds before displaying faults stored in history.
- All faults are displayed one time, from most recent to least recent.
- A Maximum of 3 consecutive faults of the same type will be logged.
- Each error is displayed for 2 seconds, with a blank screen for 1 second in between.
- When all errors have been displayed, the display returns to ON.

LED	LED Status	Indication	Possible Causes	Corrective Action(s)	Notes & Cautions
Red Communications LED	Off	• Normal condition	• None	• None	• None
	2 Flashes	• Out-of-box reset	• Control power up • Learn button depressed	• None	• None
Green Receive LED	Rapid Flashing	• Normal network traffic	• Control is "talking" on network as expected	• None	• None
	On Solid	• Data 1/ Data 2 miss-wire	• Data 1 and data 2 wires reversed at furnace, thermostat or communicating compatible outdoor AC/HP	• Check communications wiring (data 1/ data 2 wires).	• Turn power OFF prior to repair.
			• Short between data 1 and data 2 wires.	• Check wire connections at terminal block	• Verify wires at terminal blocks are securely twisted together prior to inserting into terminal block.
			• Short between data 1 or data 2 wires and R (24VAC) or C (24VAC common).	• Check data 1/ data 2 voltages.	• Verify data 1 and data voltages as described above

FAULT CLEAR SEQUENCE:

- Only allowed in standby mode, while display is showing ON.
- Hold fault recall push-button for 5-10 seconds (until display starts flashing "—") and then release.
- All faults in the history will have been cleared, and display returns to ON.
- If you hold the button for longer than 10 seconds, the display will return to ON and the faults will not be cleared.

NORMAL SEQUENCE OF OPERATION

POWER UP

The normal power up sequence is as follows:

- 115 VAC power applied to furnace.
- Integrated control module performs internal checks.
- Integrated control module monitors safety circuits continuously.
- Furnace awaits call from thermostat. Dual 7-segment LED's display **0** while awaiting call from thermostat.

HEATING MODE

The normal operational sequence in heating mode is as follows:

- Thermostat contacts close, initiating a call for heat.
- Integrated control module performs safety circuit checks.
- Induced draft blower is energized on high speed for a 15-second prepurge.
- Induced draft blower steps to low speed following prepurge. Low stage pressure switch contacts are closed.
- Igniter warm up begins upon step to low speed and presence of closed low stage pressure switch contacts.
- Gas valve opens at end of igniter warm up period, delivering gas to burners and establishing flame.
- Integrated control module monitors flame presence. Gas valve will remain open only if flame is detected.
- The percentage of heating demand is sent from the furnace control board to determine what RPM the draft inducer should run at. A higher percentage demand will drive the inducer RPM higher. This will cause the gas valve to modulate higher. The burner will modulate based on the inducer speed
- Circulator blower is energized on heat speed following a thirty (30) second blower on delay. The circulator blower CFM will increase or decrease with gas valve modulation. Electronic air cleaner terminal is energized with circulator blower.
- Furnace is now operating on the specified stage called for by the thermostat.
- Furnace runs, integrated control module monitors safety circuits continuously.
- If the two-stage thermostat changes the call from low heat to high heat, the integrated control module will immediately switch the induced draft blower, gas valve, and circulator blower to their high stage settings.
- The thermostat contacts open, completing the call for heat.
- Gas valve closes, extinguishing flame.
- Induced draft blower is de-energized following a fifteen second post purge. Humidifier contacts open.
- Circulator blower continues running for the selected heat off delay period (90, 120, 150 or 180 seconds). The speed run during this period depends on the last heat call provided by the thermostat.

  If the last call for heat was a call for high heat, the air circulating motor will run on the high heating speed for thirty (30) seconds and then switch to the low heating speed for the **balance** of the heat off delay period (60, 90, 120 or 150 seconds).

- Circulator blower and electronic air cleaner terminal is de-energized.
- Circulator blower ramps down to OFF during the 30 seconds following the heat off delay period.
- Furnace awaits next call from thermostat.

Cooling Mode

The normal operational sequence in cooling mode is as follows:

- R and Y1/G or Y2/G thermostat contacts close, initiating a call for cool.
- Integrated control module performs safety circuit checks.
- Outdoor fan and compressor are energized to their appropriate speed.
- Circulator blower is energized on the appropriate cool speed at the level and time determined by the selected ramping profile. Electronic air cleaner terminal is energized with circulator blower.
- Furnace circulator blower and outdoor cooling unit run their appropriate speeds, integrated control module monitors safety circuits continuously.
- R and Y1/G or Y2/G thermostat contacts open, completing the call for cool.
- Outdoor fan and compressor are de-energized.
- Circulator blower continues running during a cool off delay period. The OFF delay time and airflow level are determined by the selected ramping profile.
- Electronic air cleaner terminal and circulator blower are de-energized.
- Furnace awaits next call from thermostat.

Fan Only Mode

The normal operational sequence in fan only mode is as follows:

- R and G thermostat contacts close, initiating a call for fan.
- Integrated control module performs safety circuit checks.
- Circulator blower is energized on continuous fan speed (25%, 50%, 75% or 100% DIP switch selectable when using a conventional thermostat). Electronic air cleaner terminal is energized.
- The furnace control board HUM dry contacts close.
- Circulator blower runs, integrated control module monitors safety circuits continuously.
- R and G thermostat contacts open, completing the call for fan.
- Circulator blower is de-energized. Electronic air cleaner terminal is de-energized.
- Furnace awaits next call from thermostat.

Operational Checks

The burner flames should be inspected with the burner compartment door installed. Flames should be stable, quiet, soft, and blue (dust may cause orange tips but they must not be yellow). Flames should extend directly outward from the burners without curling, floating, or lifting off. Flames must not impinge on the sides of the heat exchanger firing tubes.

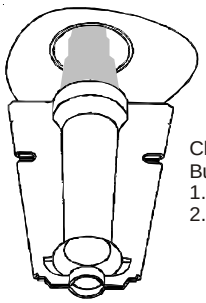

Check the
Burner Flames for:
1. Stable, soft and blue.
2. Not curling, floating or lifting off.

Burner Flame

Safety Circuit Description

A number of safety circuits are employed to ensure safe and proper furnace operation. These circuits serve to control any potential safety hazards and serve as inputs in the monitoring and diagnosis of abnormal function. These circuits are continuously monitored during furnace operation by the integrated control module.

Furnace Control Board

The furnace control board is an electronic device which, if a potential safety concern is detected, will take the necessary precautions and provide diagnostic information through an LED display.

Primary Limit

The primary limit control is located on the partition panel and monitors heat exchanger compartment temperatures. It is a normally-closed (electrically), automatic reset, temperature-activated sensor. The limit guards against overheating as a result of insufficient conditioned air passing over the heat exchanger.

Auxiliary Limit

The auxiliary limit controls are located on or near the circulator blower and monitors blower compartment temperatures. They are a normally-closed (electrically), auto-reset sensors. These limits guard against overheating as a result of insufficient conditioned air passing over the heat exchanger.

Rollout Limit

The rollout limit controls are mounted on the burner/manifold assembly and monitor the burner flame. They are normally-closed (electrically), manual-reset sensors. These limits guard against burner flames not being properly drawn into the heat exchanger.

Pressure Switches

The pressure switches are normally-open (closed during operation) negative air pressure-activated switches. They monitor the airflow (combustion air and flue products) through the heat exchanger via pressure taps located on the induced draft blower and the coil front cover. These switches guard against insufficient airflow (combustion air and flue products) through the heat exchanger and/or blocked condensate drain conditions.

Flame Sensor

The flame sensor is a probe mounted to the burner/manifold assembly which uses the principle of flame rectification to determine the presence or absence of flame.

Troubleshooting

Electrostatic Discharge (ESD) Precautions

NOTE: Discharge body's static electricity before touching unit. An electrostatic discharge can adversely affect electrical components.

Use the following precautions during furnace installation and servicing to protect the integrated control module from damage. By putting the furnace, the control, and the person at the same electrostatic potential, these steps will help avoid exposing the integrated control module to electrostatic discharge. This procedure is applicable to both installed and uninstalled (ungrounded) furnaces.

1. Disconnect all power to the furnace. Do not touch the integrated control module or any wire connected to the control prior to discharging your body's electrostatic charge to ground.
2. Firmly touch a clean, unpainted, metal surface of the furnace away from the control. Any tools held in a person's hand during grounding will be discharged.
3. Service integrated control module or connecting wiring following the discharge process in step 2. Use caution not to recharge your body with static electricity; (i.e., do not move or shuffle your feet, do not touch ungrounded objects, etc.). If you come in contact with an ungrounded object, repeat step 2 before touching control or wires.
4. Discharge your body to ground before removing a new control from its container. Follow steps 1 through 3 if installing the control on a furnace. Return any old or new controls to their containers before touching any ungrounded object.

Diagnostic Chart

WARNING

HIGH VOLTAGE !

To avoid personal injury or death due to electrical shock, disconnect electrical power BEFORE performing any service or maintenance.

Refer to the *Troubleshooting Codes* for assistance in determining the source of unit operational problems. The dual 7-segment LED display will display an error code that may contain a letter and number. The error code may be used to assist in troubleshooting the unit.

Resetting From Lockout

Furnace lockout results when a furnace is unable to achieve ignition after three attempts during a single call for heat. It is characterized by a non-functioning furnace and a **E0** code displayed on the dual 7-segment display. If the furnace is in "lockout", it will (or can be) reset in any of the following ways.

1. Automatic reset. The integrated control module will automatically reset itself and attempt to resume normal operations following a one hour lockout period.
2. Manual power interruption. Interrupt 115 volt power to the furnace.
3. Manual thermostat cycle. Lower the thermostat so that there is no longer a call for heat for 1 -20 seconds then reset to previous setting.

NOTE: If the condition which originally caused the lockout still exists, the control will return to lockout. Refer to the *Troubleshooting Codes* for aid in determining the cause.

Maintenance

WARNING

To avoid electrical shock, injury or death, disconnect electrical power before performing any maintenance. If you must handle the igniter, handle with care. Touching the igniter element with bare fingers, rough handling or vibration could damage the igniter resulting in premature failure. Only a qualified servicer should ever handle the igniter.

Annual Inspection

The furnace should be inspected by a qualified installer, or service agency at least once per year. This check should be performed at the beginning of the heating season. This will ensure that all furnace components are in proper working order and that the heating system functions appropriately. Pay particular attention to the following items. Repair or service as necessary.

- Flue pipe system. Check for blockage and/or leakage. Check the outside termination and the connections at and internal to the furnace.
- Heat exchanger. Check for corrosion and/or buildup within the heat exchanger passageways.
- Burners. Check for proper ignition, burner flame, and flame signal.
- Drainage system. Check for blockage and/or leakage. Check hose connections at and internal to furnace.
- Wiring. Check electrical connections for tightness and/or corrosion. Check wires for damage.
- Filters.

Filters

CAUTION

To ensure proper unit performance, adhere to the filter sizes given in the recommended Minimum Filter Size Table or Specification Sheet applicable to your model.

Filter Maintenance

Improper filter maintenance is the most common cause of inadequate heating or cooling performance. Filters should be cleaned (permanent) or replaced (disposable) every two months or as required. When replacing a filter, it must be replaced with a filter of the same type and size.

Filter Removal

Depending on the installation, differing filter arrangements can be applied. Filters can be installed in either the central return register or a side panel external filter rack (upflow only). A media air filter or electronic air cleaner can be used as an alternate filter. Follow the filter sizes given in the Recommended Minimum Filter size table to ensure proper unit performance.

To remove filters from an external filter rack in an upright upflow installation, follow the directions provided with external filter rack kit.

Horizontal Unit Filter Removal

Filters in horizontal installations are located in the central return register or the ductwork near the furnace.

To remove:

1. Turn OFF electrical power to furnace.
2. Remove filter(s) from the central return register or ductwork.
3. Replace filter(s) by reversing the procedure for removal.
4. Turn ON electrical power to furnace.

Media Air Filter or Electronic Air Cleaner Removal

Follow the manufacturer's directions for service.

Burners

Visually inspect the burner flames periodically during the heating season. Turn on the furnace at the thermostat and allow several minutes for flames to stabilize, since any dislodged dust will alter the flames normal appearance. Flames should be stable, quiet, soft, and blue (dust may cause orange tips but they must not be yellow). They should extend directly outward from the burners without curling, floating, or lifting off. Flames must not impinge on the sides of the heat exchanger firing tubes.

Induced Draft and Circulator Blowers

The bearings in the induced draft blower and circulator blower motors are permanently lubricated by the manufacturer. No further lubrication is required. Check openings on motor housing for accumulation of dust which may cause overheating. Clean as necessary.

Condensate Trap and Drain System (Qualified Servicer Only)

Annually inspect the drain tubes, drain trap, and field-supplied drain line for proper condensate drainage. Check drain system for hose connection tightness, blockage, and leaks. Clean or repair as necessary.

Flame Sensor (Qualified Servicer Only)

Under some conditions, the fuel or air supply can create a nearly invisible coating on the flame sensor. This coating acts as an insulator causing a drop in the flame sense signal. If the flame sense signal drops too low the furnace will not sense flame and will lock out. The flame sensor should be carefully cleaned by a qualified servicer using emery cloth or steel wool. Following cleaning, the flame sense signal should be as indicated in the Specifications Sheet.

Before Leaving an Installation

- Cycle the furnace with the thermostat at least three times. Verify cooling and fan only operation.
- Review the Owner's Manual with the homeowner and discuss proper furnace operation and maintenance.
- Leave literature packet near furnace.

Repair and Replacement Parts

- When ordering any of the listed functional parts, be sure to provide the furnace model, manufacturing, and serial numbers with the order.
- Although only functional parts are shown in the parts list, all sheet metal parts, doors, etc. may be ordered by description.
- Parts are available from your distributor.

Functional Parts List-

Gas Valve	Blower Motor
Gas Manifold	Blower Wheel
Natural Gas Orifice	Blower Mounting Bracket
Propane Gas Orifice	Blower Cutoff
Igniter	Blower Housing
Flame Sensor	Inductor
Rollout Limit Switch	Heat Exchanger with
Primary Limit Switch	Recuperator Coil
Auxiliary Limit Switch	Coil Front Cover
Pressure Switch	Integrated Control Module
Induced Draft Blower	Transformer
Door Switch	

Symptoms of Abnormal Operation (Non-communicating & ComfortNet™ Thermostat)	Diagnostic/Status LED Codes	Fault Description	ComfortNet Thermostat Only Message	ComfortNet Thermostat Only Code	Possible Causes	Corrective Actions	Notes & Cautions
• Furnace fails to operate • Integrated control module LED display provides IF error code.. • ComfortNet thermostat "Call for Service" icon illuminated • ComfortNet thermostat scrolls "Check Furnace" message	IF	• Integrated control module has an internal fault	*INTERNAL FAULT*	*EE*	• Improper wiring to the furnace or integrated control module.	• Assure proper wiring to furnace and integrated control module. • Verify power to the furnace and integrated control module is stable and within specifications. • Replace bad integrated control module.	• Turn power OFF prior to repair. • Read precautions in "Electrostatic Discharge" section of manual. • Replace integrated control module with current replacement parts.
• LED display indicates On	On	• Normal operation	None	None	• Normal operation	• None	• Normal operation
• Furnace fails to operate • Integrated control module LED display provides E0 error code. • ComfortNet thermostat "Call for Service" icon illuminated. • ComfortNet thermostat scrolls "Check Furnace" message.	E0	• Furnace lockout due to an excessive number of ignition "retries" or flame "recycles" (3 total).	*LOCKOUT*	*E0*	• Failure to establish flame. Cause may be no gas to burners, front cover pressure switch stuck open, bad igniter or igniter alignment, improper orifices, or coated/oxidized or improperly connected flame sensor. • Loss of flame after establishment. Cause may be interrupted gas supply, lazy burner flames (improper gas pressure or restriction in flue and/or combustion air piping), front cover pressure switch opening, or improper induced draft blower performance.	• Locate and correct gas interruption. • Check front cover pressure switch operation (hose, wiring, contact operation). Correct if necessary. Make sure furnace is draining properly. • Replace or realign igniter. • Check flame sense signal. Sand sensor if coated and/or oxidized. • Check flue piping for blockage, proper length, elbows, and termination. • Verify proper induced draft blower performance.	• Turn power OFF prior to repair. • Igniter is fragile, handle with care. • Clean flame rod with steel wool. • See "Vent/Flue Pipe" section for piping details.
• Furnace fails to operate. • Integrated control module LED display provides E1 error code. • ComfortNet thermostat "Call for Service" icon illuminated. • ComfortNet thermostat scrolls "Check Furnace" message.	E1	• Low stage pressure switch circuit is closed at start of heating cycle.	*PS1 CLOSED*	*E1*	• Low stage pressure switch contacts sticking. • Shorts in pressure switch circuit wiring.	• Replace low stage pressure switch. • Repair short in wiring.	• Turn power OFF prior to repair. • Replace pressure switch with correct replacement part.
• Induced draft blower runs continuously with no further furnace operation. • Integrated control module LED display provides E2 error code. • ComfortNet thermostat "Call for Service" icon illuminated. • ComfortNet thermostat scrolls "Check Furnace" message.	E2	• Low stage pressure switch circuit is not closed.	*PS1 OPEN*	*E2*	• Pressure switch hose blocked pinched, or connected improperly. • Blocked flue and/or inlet air pipe, blocked drain system or weak induced draft blower. • Incorrect pressure switch set point or malfunctioning switch contacts. • Loose or improperly connected wiring. • Inducer not running. • H fitting atmospheric port blocked.	• Inspect pressure switch hose. Repair/replace if necessary. • Inspect flue and/or inlet air piping for blockage, proper length, elbows, and termination. • Check drain system. Correct as necessary. • Check induced draft blower performance. Correct as necessary. • Correct pressure switch set point or contact motion. • Tighten or correct wiring connection. • Clean H fitting.	• Turn power OFF prior to repair. • Replace pressure switch with correct replacement part. • Replace induced draft blower with correct replacement part. • Take care to assemble/install H fitting in factory configuration.

Symptoms of Abnormal Operation (Non-communicating & ComfortNet™ Thermostat)	Diagnostic/Status LED Codes	Fault Description	ComfortNet Thermostat Only Message	ComfortNet Thermostat Only Code	Possible Causes	Corrective Actions	Notes & Cautions
• Circulator blower runs continuously. No furnace operation. • Integrated control module LED display provides E3 error code. • ComfortNet thermostat "Call for Service" icon illuminated. • ComfortNet thermostat scrolls "Check Furnace" message.	E3	• Primary limit.	*HIGH LIMIT OPEN*	*E3*	• Insufficient conditioned air over the heat exchanger. Blocked filters, restrictive ductwork, improper circulator blower speed, or failed circulator blower motor. • Loose or improperly connected wiring.	• Check filters and ductwork for blockage. Clean filters or remove obstruction. • Check circulator blower speed and performance. Correct speed or replace blower motor if necessary. • Tighten or correct wiring connection.	• Turn power OFF prior to repair. • See Specification Sheet applicable to your model for allowable rise range and proper circulator speed.
• Induced draft blower and circulator blower runs continuously. No furnace operation. • Integrated control module LED display provides E4 error code. • ComfortNet thermostat "Call for Service" icon illuminated. • ComfortNet thermostat scrolls "Check Furnace" message.	E4	• Flame sensed when it should not be present.	*IMPROPER FLAME*	*E4*	• Short to ground in flame sense circuit. • Lingering burner flame. • Slow closing gas valve.	• Correct short at flame sensor or in flame sensor wiring. • Check for lingering flame. • Verify proper operation of gas valve. Replace if necessary.	• Turn power OFF prior to repair.
• Furnace fails to operate • Integrated control module LED display provides EC error code. • ComfortNet thermostat "Call for Service" icon illuminated. • ComfortNet thermostat scrolls "Check Furnace" message.	EC	• Inducer motor overcurrent fault.	*INDUCER FAULT OR INDUCER LOCKOUT*	*EC*	• Lingering Inducer motor overcurrent detected.	• Reset system power and verify inducer is running properly. • Replace inducer or integrated control module, if necessary.	
• No furnace operation. • Integrated control module LED display provides Ed error code.	Ed	• Manual reset rollout switch is open	*ROLLOUT OPEN*	*Ed*	• Orifice plate out of position. • Blocked heat exchanger. • Burners out of alignment. • Defective heat exchanger.	• Line up orifice plate. • Remove Blockage from heat exchanger. • Line up burners. • Check for flame disturbance on roll out when blower comes on.	• Turn power OFF prior to repair.
• No furnace operation. • Integrated control module LED display provides Ef error code.	EF	• Open auxiliary input.	*AUXILIARY OPEN*	*EF*	• Open circuit between aux in or aux out. • Missing jumper. • Open float switch..	• Install jumper. • Inspect float switch.	• Turn power OFF prior to repair.
• No furnace operation. • Integrated control module LED display provides E5 error code. • ComfortNet thermostat displays "Battery Power".	E5	• Open Fuse	Not Displayed	Not Displayed	• Short in low voltage wiring	• Locate and correct short in low voltage wiring	• Turn power OFF prior to repair. • Replace fuse with 3-amp automotive type
• Normal furnace operation. • Integrated control module LED display provides E6 error code.	E6	• Flame sense micro amp signal is low	*WEAK FLAME*	*E6*	• Flame sensor is coated/oxidized. • Flame sensor incorrectly .positioned in burner flame. • Lazy burner flame due to improper gas pressure or combustion air.	• Clean flame sensor if coated/oxidized. • Inspect for proper sensor alignment. • Check inlet air piping for blockage, proper length, elbows, and termination. • Compare current gas pressure to rating plate. Adjust as needed.	• Turn power OFF prior to repair. • Clean flame sensor with steel wool. • See "Vent/Flue Pipe" section for piping details. • See rating plate for proper gas pressure.

Symptoms of Abnormal Operation (Non-communicating & ComfortNet™ Thermostat)	Diagnostic/Status LED Codes	Fault Description	ComfortNet Thermostat Only		Possible Causes	Corrective Actions	Notes & Cautions
			Message	Code			
• Furnace fails to operate on high stage; furnace operates normally on low stage. • Integrated control module LED display provides E8 error code.	E8	• High stage pressure switch circuit is closed at start of heating cycle. • Induced draft blower is operating. • Furnace is operating on low stage only	*PS2 CLOSED*	*E8*	• High stage pressure switch contacts sticking. • Shorts in pressure switch circuit wiring.	• Replace high stage pressure switch. • Repair short in wiring	• Turn power OFF prior to repair. • Replace pressure switch with correct replacement part.
• Furnace fails to operate on high stage; furnace operates normally on low stage. • Integrated control module LED display provides E9 error code.	E9	• High stage pressure switch circuit is not closed. • Induced draft blower is operating. • Furnace is operating on low stage only	*PS2 OPEN*	*E9*	• Pressure switch hose blocked pinched, or connected improperly. • Blocked flue and/or inlet air pipe, blocked drain system or weak induced draft blower. • Incorrect pressure switch set point or malfunctioning switch contacts. • Loose or improperly connected wiring.	• Inspect pressure switch hose. Repair/replace if necessary. • Inspect flue and/or inlet air piping for blockage, proper length, elbows, and termination. Check drain system. Correct as necessary. • Check induced draft blower performance. Correct as necessary. • Correct pressure switch set point or contact motion. • Tighten or correct wiring connection.	• Turn power OFF prior to repair. • Replace pressure switch with correct replacement part. • Replace induced draft blower with correct replacement part.
• Furnace fails to operate. • Integrated control module LED display provides EA error code. • ComfortNet thermostat "Call for Service" icon illuminated. • ComfortNet thermostat scrolls "Check Furnace" message.	EA	• Polarity of 115 volt AC is reversed	*REVERSED PLTY*	*EA*	• Polarity of 115 volt AC power to furnace or integrated module is reversed. • Reversed unit ground.	• Review wiring diagram to correct polarity. • Verify proper ground. Correct if necessary. • Check and correct wiring.	• Turn power OFF prior to repair.
• Furnace fails to operate. • Integrated control module LED display provides d0 error code. • ComfortNet thermostat "Call for Service" icon illuminated. • ComfortNet thermostat scrolls "Check Furnace" message.	d0	• Data not yet on network.	*NO NET DATA*	*d0*	• Furnace does not contain any shared data.	• Populate shared data set using memory card.	• Turn power OFF prior to repair • Use memory card for the specific model. • Insert memory card BEFORE turning power ON. Memory card may be removed after data is loaded. • Turn power OFF before removing memory card. • Error code will be cleared once data is loaded.

Symptoms of Abnormal Operation (Non-communicating & ComfortNet™ Thermostat)	Diagnostic/Status LED Codes	Fault Description	ComfortNet Thermostat Only Message	ComfortNet Thermostat Only Code	Possible Causes	Corrective Actions	Notes & Cautions
• Operation different than expected or no operation. • Integrated control module LED display provides d4 error code. • ComfortNet thermostat "Call for Service" icon illuminated. • ComfortNet thermostat scrolls "Check Furnace" message.	d4	• Invalid memory card data.	*INVALID MC DATA*	*d4*	• Shared data set on memory card has been rejected by integrated control module	• Verify shared data set is correct for the specific model. Re-populate data using correct memory card if required.	• Turn power OFF prior to repair • Use memory card for the specific model. • Insert memory card BEFORE turning power ON. Memory card may be removed after data is loaded. • Turn power OFF before removing memory card. • Error code will be cleared once data is loaded.
• Furnace fails to operate. • Integrated control module LED display provides b0 error code. • ComfortNet thermostat "Call for Service" icon illuminated. • ComfortNet thermostat scrolls "Check Furnace" message.	b0	• Circulator blower motor is not running when it should be running.	*MOTOR NOT RUN*	*b0*	• Loose wiring connection at circulator motor power leads or circulator motor power leads disconnected. • Open circuit in inductor or loose wiring connection at inductor (3/4 Hp and 1 Hp models only). • Failed circulator blower motor.	• Tighten or correct wiring connection. • Verify continuous circuit through inductor. Replace if open or short circuit. • Check circulator blower motor. Replace if necessary.	• Turn power OFF prior to repair • Replace inductor with correct replacement part. • Replace circulator motor with correct replacement part.
• Furnace fails to operate. • Integrated control module LED display provides b1 error code. • ComfortNet thermostat "Call for Service" icon illuminated. • ComfortNet thermostat scrolls "Check Furnace" message.	b1	• Integrated control module has lost communications with circulator blower motor.	*MOTOR COMM*	*b1*	• Loose wiring connection at circulator motor control leads. • Failed circulator blower motor. • Failed integrated control module.	• Tighten or correct wiring connection. • Check blower motor with UTT-01 Emerson tester • Check integrated control module. Replace if necessary.	• Turn power OFF prior to repair • Replace circulator motor with correct replacement part. • Replace integrated control module with correct replacement part.
• Furnace fails to operate. • Integrated control module LED display provides b2 error code. • ComfortNet thermostat "Call for Service" icon illuminated. • ComfortNet thermostat scrolls "Check Furnace" message.	b2	• Circulator blower motor horse power in shared data set does not match circulator blower motor horse power.	*MOTOR MISMATCH*	*b2*	• Incorrect circulator blower motor in furnace. • Incorrect shared data set in integrated control module.	• Verify circulator blower motor horse power is the same specified for the specific furnace model. Replace if necessary. • Verify shared data set is correct for the specific model. Re-populate data using correct memory card if required.	• Turn power OFF prior to repair • Replace motor with correct replacement part. • Use memory card for the specific model • Insert memory card BEFORE turning power ON. Memory card may be removed after data is loaded. • Turn power OFF before removing memory card. • Error code will be cleared once shared data and motor horse power match.
• Furnace operates at reduced performance. • Airflow delivered is less than expected. • Integrated control module LED display provides b3 error code.	b3	• Circulator blower motor is operating in a power, temperature, or speed limiting condition.	*MOTOR LIMITS*	*b3*	• Blocked filters. • Restrictive ductwork. • Undersized ductwork. • High ambient temperatures.	• Check filters for blockage. Clean filters or remove obstruction. • Check ductwork for blockage. Remove obstruction. Verify all registers are fully open. • Verify ductwork is appropriately sized for system. Resize/replace ductwork if necessary. • See *"Product Description" and "Location Requirements & Considerations"* for furnace installation requirements.	• Turn power OFF prior to repair.

Symptoms of Abnormal Operation (Non-communicating & ComfortNet™ Thermostat)	Diagnostic/Status LED Codes	Fault Description	ComfortNet Thermostat Only		Possible Causes	Corrective Actions	Notes & Cautions
			Message	Code			
• Furnace fails to operate. • Integrated control module LED display provides b4 error code. • ComfortNet thermostat "Call for Service" icon illuminated. • ComfortNet thermostat scrolls "Check Furnace" message.	b4	• Circulator blower motor senses a loss of rotor control. • Circulator blower motor senses high current.	*MOTOR TRIPS*	*b4*	• Abnormal motor loading, sudden change in speed or torque, sudden blockage of furnace air inlet or outlet. • High loading conditions, blocked filters, very restrictive ductwork, blockage of furnace air inlet or outlet.	• Check filters, filter grills/registers, duct system, and furnace air inlet/outlet for blockages.	• Turn power OFF prior to repair.
• Furnace fails to operate. • Integrated control module LED display provides b5 error code. • ComfortNet thermostat "Call for Service" icon illuminated. • ComfortNet thermostat scrolls "Check Furnace" message.	b5	• Circulator blower motor fails to start 10 consecutive times.	*MTR LCKD ROTOR*	*b5*	• Obstruction in circulator blower housing. • Seized circulator blower motor bearings. • Failed circulator blower motor.	• Check circulator blower for obstructions. Remove and repair/replace wheel/motor if necessary. • Check circulator blower motor shaft rotation and motor. Replace motor if necessary.	• Turn power OFF prior to repair • Replace motor with correct replacement part. • Replace wheel with correct replacement part.
• Furnace fails to operate. • Integrated control module LED display provides b6 error code. • ComfortNet thermostat "Call for Service" icon illuminated. • ComfortNet thermostat scrolls "Check Furnace" message.	b6	• Circulator blower motor shuts down for over or under voltage condition. • Circulator blower motor shuts down due to over temperature condition on power module.	*MOTOR VOLTS*	*b6*	• High AC line voltage to furnace. • Low AC line voltage to furnace. • High ambient temperatures.	• Check power to furnace. Verify line voltage to furnace is within the range specified on the furnace rating plate. • See *"Product Description"* and *"Location Requirements & Considerations"* for furnace installation requirements.	• Turn power OFF prior to repair.
• Furnace fails to operate. • Integrated control module LED display provides b7 error code. • ComfortNet thermostat "Call for Service" icon illuminated. • ComfortNet thermostat scrolls "Check Furnace" message.	b7	• Circulator blower motor does not have enough information to operate properly. • Motor fails to start 40 consecutive times.	*MOTOR PARAMS*	*b7*	• Error with integrated control module. • Motor has a locked rotor condition.	• Check integrated control module. Verify control is populated with correct shared data set. See data errors above for details. • Check for locked rotor condition (see error code above for details).	• Turn power OFF prior to repair. • Replace with correct replacement part(s). • Use memory card for the specific model.
• Furnace operates at reduced performance. • Integrated control module LED display provides b9 error code.	b9	• Airflow is lower than demanded.	*LOW ID AIRFLOW*	*b9*	• Blocked filters. • Restrictive ductwork. • Undersized ductwork.	• Check filters for blockage. Clean filters or remove obstruction. • Check ductwork for blockage. Remove obstruction. Verify all registers are fully open. • Verify ductwork is appropriately sized for system. Resize/replace ductwork if necessary.	• Turn power OFF prior to repair.

STATUS CODES

	NO POWER
On	NORMAL OPERATION
A	INDICATES AIRFLOW, FOLLOWED BY CFM
b0	BLOWER MOTOR NOT RUNNING
b1	BLOWER COMMUNICATION ERROR
b2	BLOWER HP MIS-MATCH
b3	BLOWER MOTOR OPERATING IN POWER, TEMPERATURE, OR SPEED LIMIT
b4	BLOWER MOTOR CURRENT TRIP OR LOST ROTOR
b5	BLOWER MOTOR LOCKED ROTOR
b6	BLOWER OVER/UNDER VOLTAGE TRIP OR OVER TEMPERATURE TRIP
b7	INCOMPLETE PARAMETERS SENT TO MOTOR
b9	LOW INDOOR AIRFLOW
C	CONVENTIONAL COMPRESSOR COOLING WHEN 1-STAGE COMPRESSOR IS SET UP
C1	LOW STAGE COOL
C2	HIGH STAGE COOL
d	CONVENTIONAL COMPRESSOR COOLING WITH DEHUMIDIFICATION WHEN 1-STAGE COMPRESSOR IS SET UP
d0	DATA NOT YET ON NETWORK
d1	CONVENTIONAL 1-STAGE COMPRESSOR COOLING WITH DEHUMIDIFICATION WHEN 2-STAGE COMPRESSOR IS SET UP
d2	CONVENTIONAL 2-STAGE COMPRESSOR COOLING WITH DEHUMIDIFICATION WHEN 2-STAGE COMPRESSOR IS SET UP
d4	INVALID MEMORY CARD DATA
dF	DEFROST DEMAND
E0	LOCKOUT DUE TO EXCESSIVE RETRIES OR RECYCLES
E1	LOW STAGE PRESSURE SWITCH STUCK CLOSED AT START OF HEATING CYCLE
E2	LOW STAGE PRESSURE SWITCH STUCK OPEN
E3	OPEN HIGH LIMIT SWITCH
E4	FLAME DETECTED WHEN NO FLAME SHOULD BE PRESENT
E5	OPEN FUSE
E6	LOW FLAME SIGNAL
E7	IGNITER FAULT OR IMPROPER GROUNDING
E8	HIGH STAGE PRESSURE SWITCH STUCK CLOSED AT START OF HEATING CYCLE
E9	HIGH STAGE PRESSURE SWITCH STUCK OPEN
EA	REVERSED 115 VAC POLARITY
EC	INDUCER MOTOR OVERCURRENT FAULT
Ed	ROLLOUT SWITCH OPEN
EF	AUXILIARY INPUT OPEN
F	CONTINUOUS FAN OR FURNACE PROVIDING AIR FOR COMMUNICATING OUTDOOR UNIT
Ft	FIELD TEST MODE
H	INDICATES GAS HEAT, FOLLOWED BY PERCENTAGE OF DEMAND
HI	HIGH HEAT = 100%
IF	INTERNAL FAULT
P	CONVENTIONAL COMPRESSOR HEATING WHEN 1-STAGE COMPRESSOR IS SET UP
P1	CONVENTIONAL 1-STAGE COMPRESSOR HEATING WHEN 2-STAGE COMPESSOR IS SET UP
P2	CONVENTIONAL 2-STAGE COMPRESSOR HEATING WHEN 2-STAGE COMPESSOR IS SET UP
50	% OF HIGH HEAT
12	CFM x 100, ALTERNATES WITH THERMOSTAT CALL & GAS HEAT OPERATING PERCENTAGE.

WARNING

HIGH VOLTAGE!
Disconnect ALL power before servicing or installing this unit. Multiple power sources may be present. Failure to do so may cause property damage, personal injury or death.

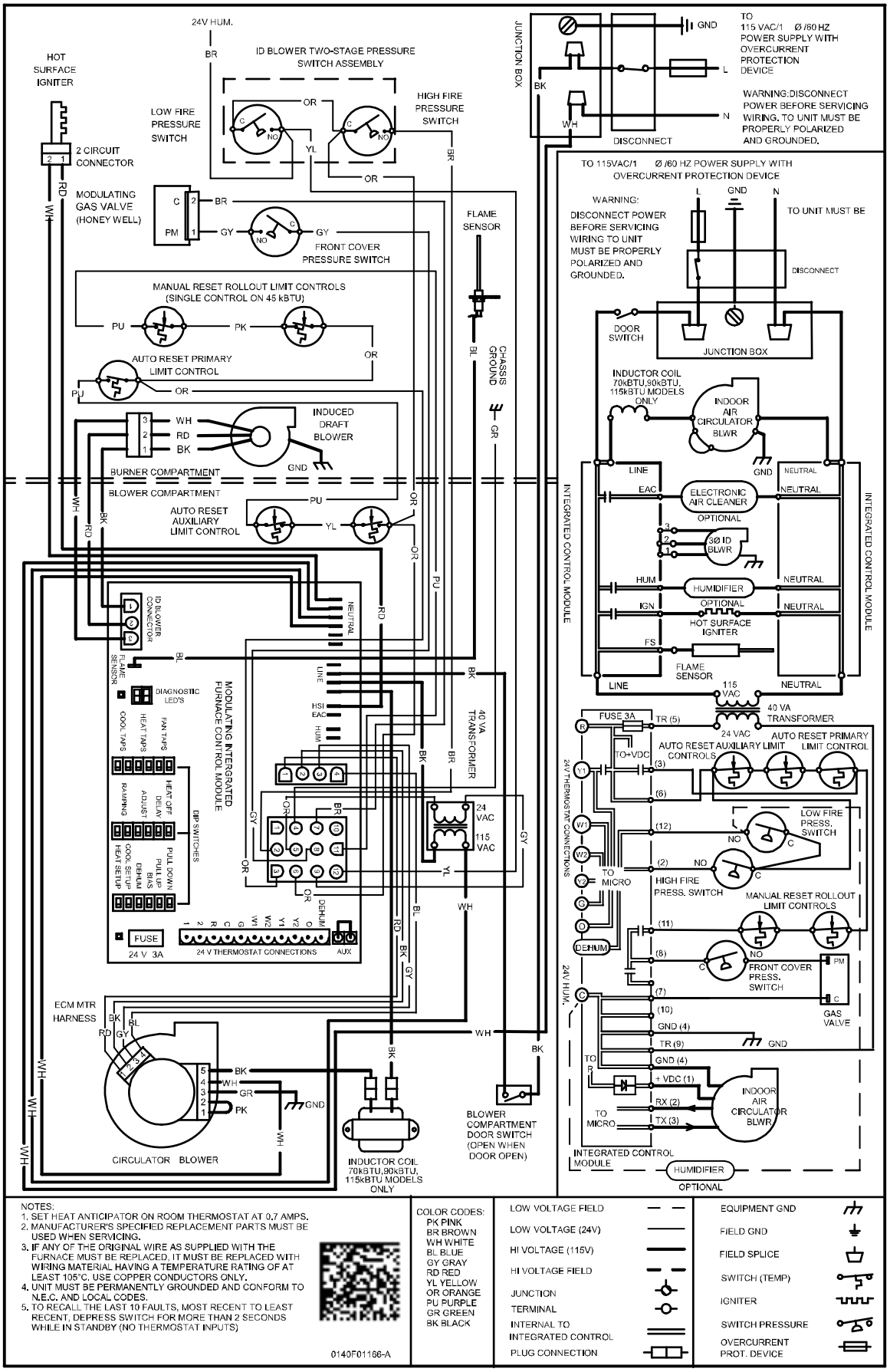

NOTES:
1. SET HEAT ANTICIPATOR ON ROOM THERMOSTAT AT 0.7 AMPS.
2. MANUFACTURER'S SPECIFIED REPLACEMENT PARTS MUST BE USED WHEN SERVICING.
3. IF ANY OF THE ORIGINAL WIRE AS SUPPLIED WITH THE FURNACE MUST BE REPLACED, IT MUST BE REPLACED WITH WIRING MATERIAL HAVING A TEMPERATURE RATING OF AT LEAST 105°C. USE COPPER CONDUCTORS ONLY.
4. UNIT MUST BE PERMANENTLY GROUNDED AND CONFORM TO N.E.C. AND LOCAL CODES.
5. TO RECALL THE LAST 10 FAULTS, MOST RECENT TO LEAST RECENT, DEPRESS SWITCH FOR MORE THAN 2 SECONDS WHILE IN STANDBY (NO THERMOSTAT INPUTS)

0140F01166-A

COLOR CODES:
PK PINK
BR BROWN
WH WHITE
BL BLUE
GY GRAY
RD RED
YL YELLOW
OR ORANGE
PU PURPLE
GR GREEN
BK BLACK

LOW VOLTAGE FIELD
LOW VOLTAGE (24V)
HI VOLTAGE (115V)
HI VOLTAGE FIELD
JUNCTION
TERMINAL
INTERNAL TO INTEGRATED CONTROL
PLUG CONNECTION

EQUIPMENT GND
FIELD GND
FIELD SPLICE
SWITCH (TEMP)
IGNITER
SWITCH PRESSURE
OVERCURRENT PROT. DEVICE

SPECIAL INSTRUCTIONS FOR PRODUCTS INSTALLED IN THE STATE OF MASSACHUSETTS

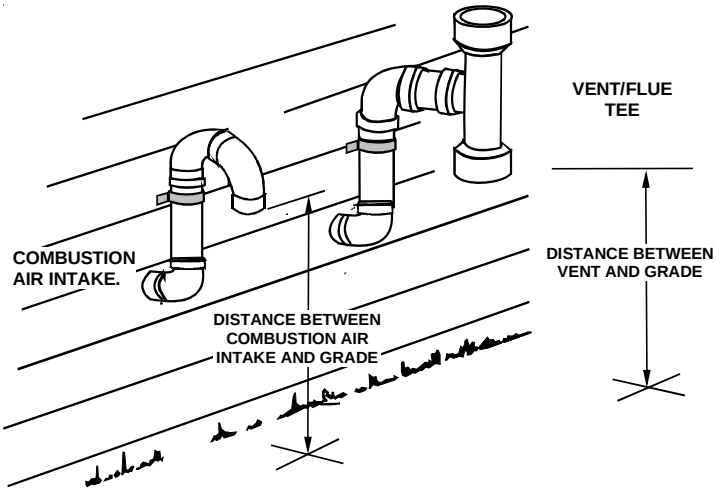

For all side wall horizontally vented gas fueled equipment installed in every dwelling, building or structure used in whole or in part for residential purposes, including those owned or operated by the Commonwealth and where the side wall exhaust vent termination is less than seven (7) feet above finished grade in the area of the venting, including but not limited to decks and porches, the following requirements shall be satisfied:

1. INSTALLATION OF CARBON MONOXIDE DETECTORS. At the time of installation of the side wall horizontal vented gas fueled equipment, the installing plumber or gasfitter shall observe that a hard wired carbon monoxide detector with an alarm and battery back-up is installed on the floor level where the gas equipment is to be installed. In addition, the installing plumber or gasfitter shall observe that a battery operated or hard wired carbon monoxide detector with an alarm is installed on each additional level of the dwelling, building or structure served by the side wall horizontal vented gas fueled equipment. It shall be the responsibility of the property owner to secure the services of qualified licensed professionals for the installation of hard wired carbon monoxide detectors
   a. In the event that the side wall horizontally vented gas fueled equipment is installed in a crawl space or an attic, the hard wired carbon monoxide detector with alarm and battery back-up may be installed on the next adjacent floor level.
   b. In the event that the requirements of this subdivision can not be met at the time of completion of installation, the owner shall have a period of thirty (30) days to comply with the above requirements; provided, however, that during said thirty (30) day period, a battery operated carbon monoxide detector with an alarm shall be installed.
2. APPROVED CARBON MONOXIDE DETECTORS. Each carbon monoxide detector as required in accordance with the above provisions shall comply with NFPA 720 and be ANSI/UL 2034 listed and IAS certified.
3. SIGNAGE. A metal or plastic identification plate shall be permanently mounted to the exterior of the building at a minimum height of eight (8) feet above grade directly in line with the exhaust vent terminal for the horizontally vented gas fueled heating appliance or equipment. The sign shall read, in print size no less than one-half (1/2) inch in size, **"GAS VENT DIRECTLY BELOW. KEEP CLEAR OF ALL OBSTRUCTIONS".**
4. INSPECTION. The state or local gas inspector of the side wall horizontally vented gas fueled equipment shall not approve the installation unless, upon inspection, the inspector observes carbon monoxide detectors and signage installed in accordance with the provisions of 248 CMR 5.08(2)(a)1 through 4.

EXEMPTIONS

The following equipment is exempt from 248 CMR 5.08(2)(a)1 through 4:

1. The equipment listed in Chapter 10 entitled "Equipment Not Required To Be Vented" in the most current edition of NFPA 54 as adopted by the Board; and
2. Product Approved side wall horizontally vented gas fueled equipment installed in a room or structure separate from the dwelling, building or structure used in whole or in part for residential purposes.

(c) MANUFACTURER REQUIREMENTS - GAS EQUIPMENT VENTING SYSTEM PROVIDED. When the manufacturer of Product Approved side wall horizontally vented gas equipment provides a venting system design or venting system components with the equipment, the instructions provided by the manufacturer for installation of the equipment and the venting system shall include:

1. Detailed instructions for the installation of the venting system design or the venting system components; and
2. A complete parts list for the venting system design or venting system.

(d) MANUFACTURER REQUIREMENTS - GAS EQUIPMENT VENTING SYSTEM NOT PROVIDED. When the manufacturer of a Product Approved side wall horizontally vented gas fueled equipment does not provide the parts for venting the flue gases, but identifies "special venting systems", the following requirements shall be satisfied by the manufacturer:

1. The referenced "special venting system" instructions shall be included with the appliance or equipment installation instructions; and
2. The "special venting systems" shall be Product Approved by the Board, and the instructions for that system shall include a parts list and detailed installation instructions.

(e) A copy of all installation instructions for all Product Approved side wall horizontally vented gas fueled equipment, all venting instructions, all parts lists for venting instructions, and/or all venting design instructions shall remain with the appliance or equipment at the completion of the installation.

Our continuing commitment to quality products may mean a change in specifications without notice.
© 2013 **DAIKIN MANUFACTURING COMPANY, L.P.**
5151 San Felipe St., Suite 500, Houston, TX 77056
www.daikincomfort.com