PACKAGED AIR CONDITIONING UNITS DP3CM 13.4 SEER2 “M” SERIES WITH R-32 INSTALLATION INSTRUCTIONS

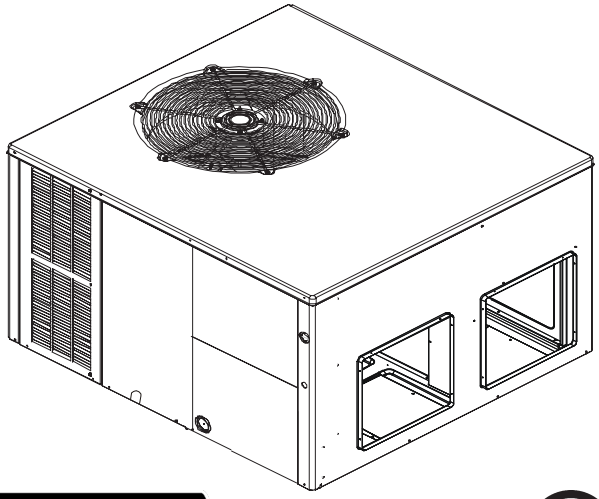

AHRI CERTIFIED®
www.ahridirectory.org
Unitary Small AC
AHRI Standard 210/240
Certification applies only when the complete system is listed with AHRI.

c UL us LISTED

Content of Quebec Disclosure:
QUEBEC DISCLOSURE REGARDING AVAILABILITY OF REPLACEMENT PARTS, REPAIR SERVICES AND INFORMATION FOR MAINTENANCE AND REPAIR: Daikin Comfort Technologies Manufacturing, Inc. (Daikin) does not guarantee the availability of (1) replacement parts; (2) repair services; and (3) information necessary to maintain or repair products, within the meaning of section 39.1 of the Consumer Protection Act, CQLR, c P-40.1 and section 79.18 of the Regulation respecting the application of the Consumer Protection Act, CQLR, c P-40.1, r. 3.

AVIS POUR LE QUÉBEC CONCERNANT LA DISPONIBILITÉ DES PIÈCES DE RECHANGE, DES SERVICES DE RÉPARATION ET DES RENSEIGNEMENTS POUR L’ENTRETIEN ET LA RÉPARATION : Daikin Comfort Technologies Manufacturing, Inc. (Daikin) ne garantit pas la disponibilité (1) des pièces de rechange, (2) des services de réparation et (3) des renseignements pour l’entretien et la réparation, au sens de l’article 39.1 de la Loi sur la protection du consommateur, RLRQ c P-40.1 et de l’article 79.18 du Règlement d’application de la Loi sur la protection du consommateur, RLRQ c P-40.1, r 3.

⚠ WARNING

ONLY PERSONNEL THAT HAVE BEEN TRAINED TO INSTALL, ADJUST, SERVICE, MAINTENANCE OR REPAIR (HEREINAFTER, “SERVICE”) THE EQUIPMENT SPECIFIED IN THIS MANUAL SHOULD SERVICE THE EQUIPMENT.

THIS EQUIPMENT IS NOT INTENDED FOR USE BY PERSONS (INCLUDING CHILDREN) WITH REDUCED PHYSICAL, SENSORY OR MENTAL CAPABILITIES, OR LACK OF EXPERIENCE AND KNOWLEDGE, UNLESS THEY HAVE BEEN GIVEN SUPERVISION OR INSTRUCTION CONCERNING USE OF THE APPLIANCE BY A PERSON RESPONSIBLE FOR THEIR SAFETY.

CHILDREN SHOULD BE SUPERVISED TO ENSURE THAT THEY DO NOT PLAY WITH THE EQUIPMENT.

THE MANUFACTURER WILL NOT BE RESPONSIBLE FOR ANY INJURY OR PROPERTY DAMAGE ARISING FROM IMPROPER SUPERVISION, SERVICE OR SERVICE PROCEDURES. IF YOU SERVICE THIS UNIT, YOU ASSUME RESPONSIBILITY FOR ANY INJURY OR PROPERTY DAMAGE WHICH MAY RESULT. IN ADDITION, IN JURISDICTIONS THAT REQUIRE ONE OR MORE LICENSES TO SERVICE THE EQUIPMENT SPECIFIED IN THIS MANUAL, ONLY LICENSED PERSONNEL SHOULD SERVICE THE EQUIPMENT. IMPROPER SUPERVISION, INSTALLATION, ADJUSTMENT, SERVICING, MAINTENANCE OR REPAIR OF THE EQUIPMENT SPECIFIED IN THIS MANUAL, OR ATTEMPTING TO INSTALL, ADJUST, SERVICE OR REPAIR THE EQUIPMENT SPECIFIED IN THIS MANUAL WITHOUT PROPER SUPERVISION OR TRAINING MAY RESULT IN PRODUCT DAMAGE, PROPERTY DAMAGE, PERSONAL INJURY OR DEATH.

⚠ WARNING

DO NOT BYPASS SAFETY DEVICES

⚠ RECOGNIZE THIS SYMBOL AS A SAFETY PRECAUTION.

NOTE: THIS EQUIPMENT IS APPROVED TO USE ONLY WITH R-32 REFRIGERANT.

Our continuing commitment to quality products may mean a change in specifications without notice.

© 2025 Daikin Comfort Technologies Manufacturing, Inc.

IOD-1077A
12/2025

19001 Kermier Rd. Waller, TX 77484
www.daikincomfort.com

TABLE OF CONTENTS

To the Installer....2
Shipping Inspection....2
Transportation Damage....2
Message to the Homeowner....2
Replacement Parts....3
Ordering Parts....3
Important Safety instructions....3
Recognize Safety Symbols, Words and Labels..3
General Information....4
Qualification of Workers....5
EPA Regulations....5
National Codes....5
Major Components....5
Pre-Installation Checkpoints....5
Unit Location....6
Clearances and Accessibility....6
Roof Top Installation Details....6
Roof Curb Installations 7
Rigging Details....7
Circulating Air and Filters....8
Air Flow Conversion....8
Horizontal Air Flow (applies to 3-phase models)....8
Down Discharge Applications 9
Ducting 9
Connecting the Return and Supply Flexible Duct in Manufactured or Modular Housing Application....9
Plenum Application....10
Filters....10
Condensate Drain Piping....10
Electrical Wiring....10
High Voltage Wiring....12
Low Voltage Wiring....12
Internal Wiring....12
Start-up Procedure and Checklist....12
Air Conditioner Start Up Procedure....12
Final System Checks....12
Components....13
Contactor....13
Crankcase Heater....13
Condenser Motor....13
Compressor....13
Contactor Relay....13
Defrost Control....13
Outdoor Thermostat....13
Reversing Valve Coil....13
Indoor Blower Motor....13
Blower Interlock Relay....13
Defrost Control....13
Suggested Field Testing/Troubleshooting....13
Testing Defrost Control....13
Testing Defrost Thermostat....14
Airflow Measurement and Adjustment....14
Total External Static Pressure....14
Adjusting Speed Tap for Indoor Blower Motor....15
EEM Motor....15
Superheat and Subcooling....15
Checking Subcooling....15
Checking Superheat....15
Superheat Adjustment....15
Refrigerant Charge Check....15
Units with Expansion Valve (TXV)....15
RDS Function....16
RDS Operation....16
Electric Heat Installation & Adjustment....16
Heater Kit....16
Maintenance....16
Troubleshooting Code....18
Troubleshooting Chart....19
Unit Dimensions....21
Wiring Diagram....22
Homeowner's Routine Maintenance....23
Start-Up Checklist....24

TO THE INSTALLER

Carefully read all instructions for the installation prior to installing unit. Make sure each step or procedure is understood and any special considerations are taken into account before starting installation. Assemble all tools, hardware and supplies needed to complete the installation. Some items may need to be purchased locally. After deciding where to install unit, closely look the location over – both the inside and outside of the home. Note any potential obstacles or problems that might be encountered as noted in this manual. Choose a more suitable location if necessary.

IMPORTANT NOTE: IF A CRANKCASE HEATER IS USED, THE UNIT SHOULD BE ENERGIZED 24 HOURS PRIOR TO COMPRESSOR START UP TO ENSURE CRANKCASE HEATER HAS SUFFICIENTLY WARMED THE COMPRESSOR. COMPRESSOR DAMAGE MAY OCCUR IF THIS STEP IS NOT FOLLOWED.

Before using this manual, check the serial plate for proper model identification.
The installation and servicing of this equipment must be performed by qualified, experienced technicians only.

SHIPPING INSPECTION

Transportation Damage

Upon receiving the unit, inspect it for damage from shipment. Claims for damage, either shipping or concealed, should be filed immediately with the shipping company. Check the unit model number, specifications, electrical characteristics, and accessories to determine if they are correct. In the event an incorrect unit is shipped, it must be returned to the supplier and must NOT be installed. The manufacturer assumes no responsibility for installation of incorrectly shipped units.

Message to the Homeowner

These instructions are addressed primarily to the installer; however, useful maintenance information is included and should be kept, after installation, for future reference.

REPLACEMENT PARTS

Ordering Parts

When reporting shortages or damages, or ordering repair parts, give the complete unit model and serial numbers as stamped on the unit's nameplate. Replacement parts for this appliance are available through your contractor or local distributor. For the location of your nearest distributor, consult:

HOMEOWNER'S SUPPORT
DAIKIN COMFORT TECHNOLOGIES
MANUFACTURING, INC.
19001 KERMIER ROAD
WALLER, TEXAS 77484
(855) 770-5678

IMPORTANT SAFETY INSTRUCTIONS

Recognize Safety Symbols, Words, and Labels.

The following symbols and labels are used throughout this manual to indicate immediate or potential hazards. It is the owner's responsibility to read and comply with all safety information and instructions accompanying these symbols. Failure to heed safety information increases the risk of serious personal injury or death, property damage and/or product damage.

Cabling

Check that cabling will not be subject to wear, corrosion, excessive pressure, vibration, sharp edges or any other adverse environmental effects. The check shall also take into account the effects of aging or continual vibration from sources such as compressors or fans.

WARNING

Do not connect to or use any device that is not listed in the applicable product specifications as acceptable for use with this unit. Serious property damage, personal injury, reduced unit performance and/or hazardous conditions may result from the use of such non-approved devices.

WARNING

HIGH VOLTAGE!
Disconnect all power before servicing or installing this unit. Multiple power sources may be present. Failure to do so may cause property damage, personal injury or death.

WARNING

Connecting unit ductwork to unauthorized heat producing devices such as a fireplace insert, stove, etc. May result in property damage, fire, carbon monoxide poisoning, explosion, personal injury or death.

WARNING

To avoid property damage, personal injury or death, do not use this unit if any part has been under water. Immediately call a qualified service technician to inspect the unit and to replace any part of the control system and any gas control having been under water.

WARNING

This unit must not be used as a "construction heater" during the finishing phases of construction on a new structure. This type of use may result in premature failure of the unit due to extremely low return air temperatures and exposure to corrosive or very dirty atmospheres.

WARNING

To prevent the risk of property damage, personal injury, or death, do not store combustible materials or use gasoline or other flammable liquids or vapors in the vicinity of this appliance.

CAUTION

Auxiliary devices which may be a potential ignition source shall not be installed in the duct work. Examples of such potential ignition sources are hot surfaces with a temperature exceeding 700 °C and electric switching devices.

WARNING

Leak detection system installed. Unit must be powered except for service.

WARNING

This unit is equipped with electrically powered safety measures. To be effective, the unit must be electrically powered at all times after installation, other than when servicing.

WARNING

Do not use means to accelerate the defrosting process or to clean, other than those recommended by the manufacturer. The appliance shall be stored in a room without continuously operating ignition sources (for example: open flames, an operating gas appliance, or an operating electric heater). Do not pierce or burn. Be aware that refrigerants may not contain an odor.

WARNING

Only auxiliary devices approved by the appliance manufacturer or declared suitable with the refrigerant shall be installed in connecting ductwork.

WARNING

PRIOR TO SERVICING THE UNIT OR REMOVING THE COMPRESSOR TERMINAL PLUG OR TERMINAL COVER, DISCONNECT ALL ELECTRICAL POWER FROM THE UNIT. MULTIPLE POWER SOURCES MAY BE PRESENT.

WARNING

DO NOT OPERATE THE COMPRESSOR(S) WITHOUT THE TERMINAL PLUG FULLY ENGAGED OR THE TERMINAL COVER PROPERLY INSTALLED.

WARNING

A TRIPPED CIRCUIT BREAKER OR BLOWN FUSE MAY INDICATE THAT AN ELECTRICAL PROBLEM EXISTS. DO NOT RESET A CIRCUIT BREAKER OR REPLACE FUSES WITHOUT FIRST PERFORMING THOROUGH ELECTRICAL TROUBLESHOOTING AND TESTING PROCEDURES.

The Following Instructions are Mandatory for A2L Systems and Supersede Other Instructions

WARNING

ONLY BRAZING TECHNIQUES OR APPROVED MECHANICAL JOINTS SHOULD BE USED TO CONNECT REFRIGERANT TUBING CONNECTIONS. NON-APPROVED MECHANICAL CONNECTORS AND OTHER METHODS ARE NOT PERMITTED IN THIS SYSTEM CONTAINING A2L REFRIGERANT. APPROVED MECHANICAL JOINTS WILL BE DETAILED IN THE PRODUCT'S SPECIFICATION SHEETS.

Deep Vacuum Method

The Deep Vacuum Method requires a vacuum pump rated for 500 microns or less. This method effectively and efficiently ensures the system is free of non-condensable air and moisture. The Triple Evacuation Method is detailed in the Service Manual for this product model as an alternative. To expedite the evacuation procedure, it is recommended that the Schrader Cores be removed from the service valves using a core-removal tool.

1. Connect the vacuum pump, micron gauge, and vacuum-rated hoses to both service valves. Evacuation must use both service valves to eliminate system mechanical seals.
2. Evacuate the system to less than 500 microns.
3. Isolate the pump from the system and hold the vacuum for 10 minutes (minimum). Typically, pressure will rise slowly during this period. If the pressure rises to less than 1000 microns and remains steady, the system is considered leak-free; proceed to system charging and startup.
4. If pressure rises above 1000 microns but holds steady below 2000 microns, non-condensable air or moisture may remain, or a small leak may be present. Return to step 2: If the same result is achieved, check for leaks and repair. Repeat the evacuation procedure.
5. If pressure rises above 2000 microns, a leak is present. Check for leaks and repair any leaks. Then, repeat the evacuation procedure.

Accessory Installation

WARNING

ALL ACCESSORIES THAT MAY BECOME A POTENTIAL IGNITION SOURCE IF INSTALLED. SUCH AS ELECTRONIC AIR CLEANERS, MUST ONLY BE POWERED THROUGH OUR ACCESSORY CONTROL BOARD KIT. IF AN ELECTRONIC AIR CLEANER IS ALREADY INSTALLED IN THE DUCT WORK AND NOT CONNECTED TO THE ACCESSORY CONTROL BOARD. IT WILL HAVE TO BE DISABLED OR REMOVED. ENSURE THAT ANY ADDITIONAL WIRING FROM THE INDOOR UNIT TO THE ACCESSORY CONTROL BOARD IS ROUTED AND PROTECTED FROM DAMAGE AND WEAR, AVOIDING THE FLUE PIPE AND ANY JOINTS THAT MAY NEED BRAZED OR DISCONNECTED FOR SERVICE. REFER TO THE PRODUCT SPECIFICATION SHEET FOR THE ACCESSORY CONTROL BOARD KIT PART NUMBER.

Altitude Adjustment Factor to Calculate Minimum Room Area

The Indoor equipment mitigation requirements are calculated at sea level. For higher altitudes adjust the minimum room area specified on or near the Serial Plate by the corresponding altitude adjustment factor shown below. This table is provided as a reference.

Adjusted room area ($A_{min\ adj}$) is the product of the minimum room area specified on or near the serial plate and the adjustment factor AF, as shown in below formula
$A_{min\ adj} = A_{min}$ (serial plate) * AF

Height in meters	Height in feet	Altitude Adjustment Factor (AF)
At sea level	At sea level	1.00
1~200	1~660	1.02
200~400	660~1320	1.03
400~600	1320~1970	1.05
600~800	1970~2630	1.07
800~1000	2630~3290	1.09
1000~1200	3290~3940	1.11
1200~1400	3940~4600	1.13
1400~1600	4600~5250	1.15
1600~1800	5250~5910	1.17
1800~2000	5910~6570	1.19
2000~2200	6570~7220	1.21
2200~2400	7220~7880	1.24
2400~2600	7880~8540	1.26
2600~2800	8540~9190	1.29
2800~3000	9190~9850	1.31
3000~3200	9850~10500	1.34

GENERAL INFORMATION

The DP3CM SEER2 M-Series air conditioners are designed for OUTDOOR USE ONLY. DP3CM SEER2 M-Series is available in cooling capacities of 3, 4 and 5 nominal tons of cooling. Optional field-installed heat kits are available in 5, 8, 10, 15 and 20kW. The units can be easily installed in manufactured or modular homes with existing high-static duct work. The units can also be easily converted to accommodate a plenum for normal or low-static applications. The DP3CM SEER2 M-Series are self-contained packaged units so the only connections needed for installation are the supply and return ducts, the

line and low voltage wiring and drain connection. Rated performance is achieved after 20 hours of operation. Rated performance is delivered at the specified airflow. See product specification for packaged models.

Specification sheets can be found at www.daikincomfort.com for Daikin brand products. Within the website, please select the Products and Services menu and then select the submenu for the type of product to be installed, such as air conditioners, to access a list of product pages that each contain links to that model's specification sheet.

The units are UL listed and AHRI certified. The information on the rating plate is in compliance with FTC and DOE rating for 3-phase units.

Qualification of Workers

Personnel must be certified to service, work, and/or repair units with FLAMMABLE REFRIGERANTS. A certificate should document the competence and qualification achieved through training that included the substance of the following:

- Information about the explosion potential of FLAMMABLE REFRIGERANTS to show that flammables may be dangerous when handled without care.
- Information about POTENTIAL IGNITION SOURCES, especially those that are not obvious, such as lighters, light switches, vacuum cleaners, electric heaters.
- Information about the different safety concepts, including ventilated and unventilated areas.
- Information about refrigerant detectors, including function, operation, and service measures.
- Information about the concept of sealed components and sealed enclosures according to IEC 60079-15:2010.
- Information about the correct working procedures, including commissioning, maintenance, repair, decommissioning, and disposal procedures.

EPA Regulations

Important: The United States Environmental Protection Agency (EPA) has issued various regulations regarding the introduction and disposal of refrigerants in this unit. Failure to follow these regulations may harm the environment and can lead to the imposition of substantial fines. Because regulations may vary due to passage of new laws, we suggest a certified technician perform any work done on this unit. Should you have any questions please contact the local office of the EPA.

National Codes

This product is designed and manufactured to permit installation in accordance with National Codes. It is the installer's responsibility to install the product in accordance with National Codes and/or prevailing local codes and regulations.

Major Components

The unit includes a hermetically sealed refrigerating system (consisting of a compressor, condenser coil, evaporator coil with flowrator), an indoor blower, a condenser fan, and all necessary internal electrical wiring. The system is factory-evacuated, charged and performance tested. Refrigerant amount and type are indicated on rating plate.

Pre-Installation Checkpoints

Carefully read all instructions for the installation prior to installing unit. Ensure each step or procedure is understood and any special considerations are taken into account before starting installation. Assemble all tools, hardware and supplies needed to complete the installation. Some items may need to be purchased locally.

Check that cabling /wiring will not be subject to wear, corrosion, excessive pressure, vibration, sharp edges or any other adverse environmental effects. The check shall also take into account the effects of aging or continual vibration from sources such as compressors or fans.

Under no circumstances shall potential sources of ignition be used in the searching for or detection of refrigerant leaks. A halide torch (or any other detector using a naked flame) shall not be used.

The following leak detection methods are deemed acceptable for all refrigerant systems.

Electronic leak detectors may be used to detect refrigerant leaks but, in the case of FLAMMABLE REFRIGERANTS, the sensitivity may not be adequate, or may need recalibration. (Detection equipment shall be calibrated in a refrigerant-free area.) Ensure that the detector is not a potential source of ignition and is suitable for the refrigerant used. Leak detection equipment shall be set at a percentage of the LFL of the refrigerant and shall be calibrated to the refrigerant employed, and the appropriate percentage of gas (25 % maximum) is confirmed.

Leak detection fluids are also suitable for use with most refrigerants but the use of detergents containing chlorine shall be avoided as the chlorine may react with the refrigerant and corrode the copper pipe-work.

If a leak is suspected, all naked flames shall be removed/ extinguished.

If a leakage of refrigerant is found which requires brazing, all of the refrigerant shall be recovered from the system.

Before attempting any installation, the following points should be considered:

- Structural strength of supporting members
- Clearances and provision for servicing
- Power supply and wiring
- Air duct connections
- Drain facilities and connections

- Location may be on any four sides of a home, manufactured or modular, to minimize noise

Consider the effect of outdoor fan noise on conditioned space and any adjacent occupied space. It is recommended that the unit be placed so that condenser air discharge does not blow toward windows less than 25 feet away.

The unit should be set on a solid, level foundation -preferably a concrete slab at least 4 inches thick. The slab should be above ground level and surrounded by a graveled area for good drainage. Any slab used as a unit's foundation should not adjoin the building as it is possible that sound and vibration may be transmitted to the structure. For rooftop installation, steel or treated wood beams should be used as unit support for load distribution.

UNIT LOCATION

NOTE: Units are designed for outdoor installation only at a max altitude of 8,000 feet above sea level.

WARNING

THE APPLIANCE SHALL BE INSTALLED, OPERATED AND STORED IN A ROOM WITH A FLOOR AREA NOT LESS THAN THE MINIMUM ROOM AREA.

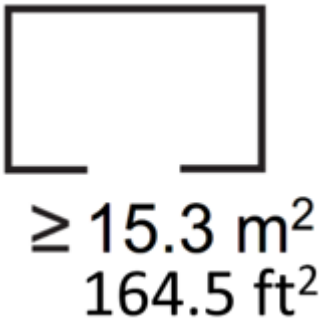

Minimum Room Area Figure

IMPORTANT NOTE: Refer to the altitude adjusted room area calculation referenced in this manual.

Clearances and Accessibility

The unit is designed to be located outside the building with unobstructed condenser air inlet and discharge. Additionally, the unit must be situated to permit access for service and installation. Condenser air enters from three sides. Air discharges upward from the top of the unit. Refrigerant gauge connections are made on the right side of the unit as you face the compressor compartment. Electrical connections can be made either on the right or left sides of the unit. The best and most common application is for the unit to be located 12" from the wall (4" minimum) with the connection side facing the wall. This "close to the wall" application minimizes exposed wiring. Close to the wall application assures free, unobstructed air to the other two sides. In more confined application spaces, such as corners provide a minimum 12" clearance on all air inlet sides. Allow 36" minimum for service access to the compressor compartment and controls. The top of the unit should be completely unobstructed. If units are to be located under an overhang, there should be a minimum of 48" clearance and provisions made to deflect the warm discharge air out from the overhang. See FIGURE 1: GROUND LEVEL INSTALLATION below.

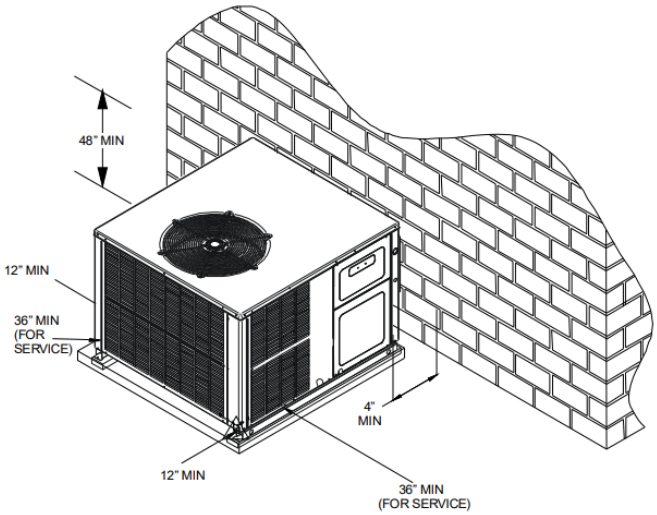

Figure 1: Ground Level Installation

Roof Top Installation (Figure 2)

1. Before locating the unit on the roof, make sure that the strength of the roof and beams is adequate to support the weight involved. (See specification sheet for weight of units). This is very important and the installer's responsibility.
2. Make a proper consideration for weather-tight integrity of the roof and proper drainage of condensate.
3. To ensure proper condensate drainage, **unit must be installed in a level position.**
4. Consideration should also be given to shade, appearance, and noise.

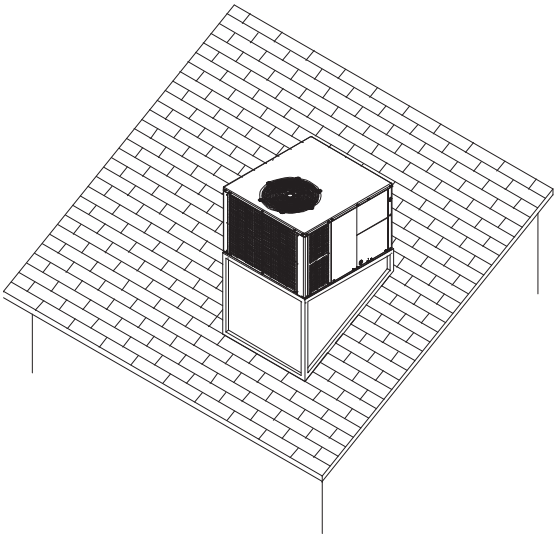

Figure 2: Rooftop Installation

Roof Curb Installations

NOTE: Sufficient structural support must be determined prior to locating and mounting the curb and package unit.

Curb insulation, cant strips, flashing and general roofing material are furnished by the contractor.

Curbing must be installed in compliance with the National Roofing Contractors Association Manual. Construct duct work using current industry guidelines. The duct work must be placed into the roof curb before mounting the package unit. See FIGURE 3: ROOFCURB INSTALLATION.

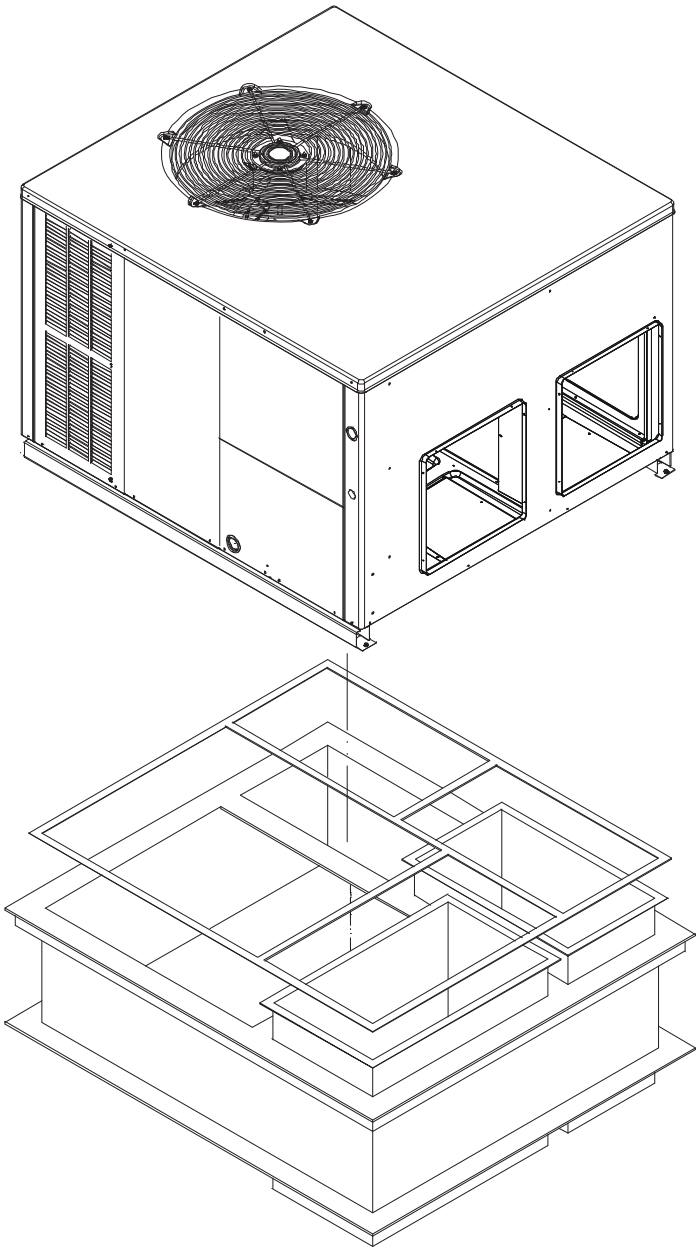

Figure 3: Roofcurb Installation

Rigging Details

WARNING

To prevent property damage, the unit should remain in an upright position during all rigging and moving operations. To facilitate lifting and moving when crane is used, place the unit in an adequate cable sling.

CAUTION

If units are lifted two at a time, the fork holes on the condenser end of the unit must not be used. Minimum for length is 42” to prevent damage to the unit; however, 48” is recommended.

NOTE: Provisions for forks have been included in the unit base frame. No other fork locations are approved.

WARNING

To avoid possible property damage, personal injury or death, ensure the roof has sufficient structural strength to carry the weight of the unit(s), roofcurb, snowloads, and water loads as required by local codes. Consult a structural engineer to determine the weight capabilities of the roof.

CAUTION

To avoid possible personal injury, a safe, flat surface for service personnel should be provided.

WARNING

To prevent possible equipment damage, property damage, personal injury or death, the following bullet points must be observed when installing the unit.

Unit must be lifted by the four lifting holes located at the base frame corners. See FIGURE 4: RIGGING.

- Lifting cables should be attached to the unit with shackles.
- The distance between the crane hook and the top of the unit must not be less than 60”.
- Two spreader bars must span over the unit to prevent damage to the cabinet by the lift cables. Spreader bars must be of sufficient length so that cables do not come into contact with the unit during transport.
- Remove wood struts mounted beneath unit base frame before setting unit on roof curb. These struts are intended to protect unit base frame from forklift damage. Removal is accomplished by extracting the sheet metal retainers and pulling the struts through the base of the unit. Refer to rigging label on the unit.

Refer to the Roof Curb Installation Instructions for proper curb installation. Curbing must be installed in compliance with the National Roofing Contractors Association Manual.

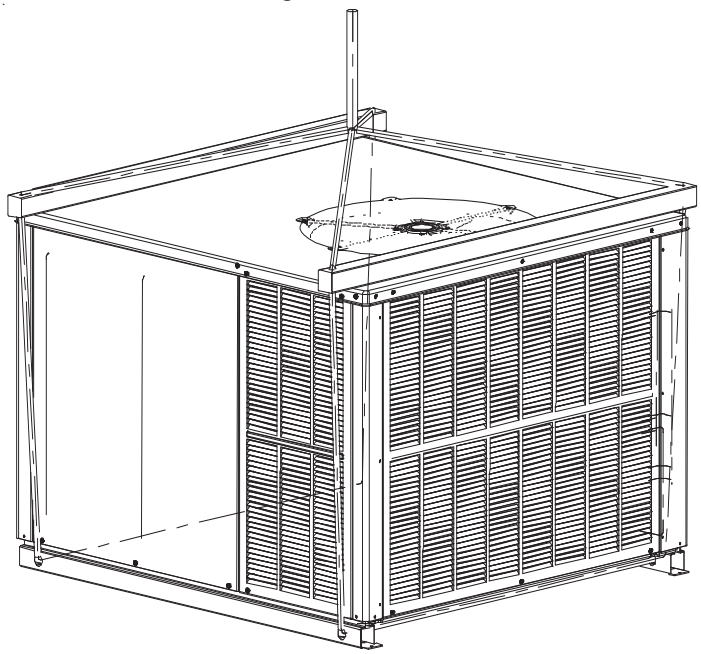

Figure 4: Rigging

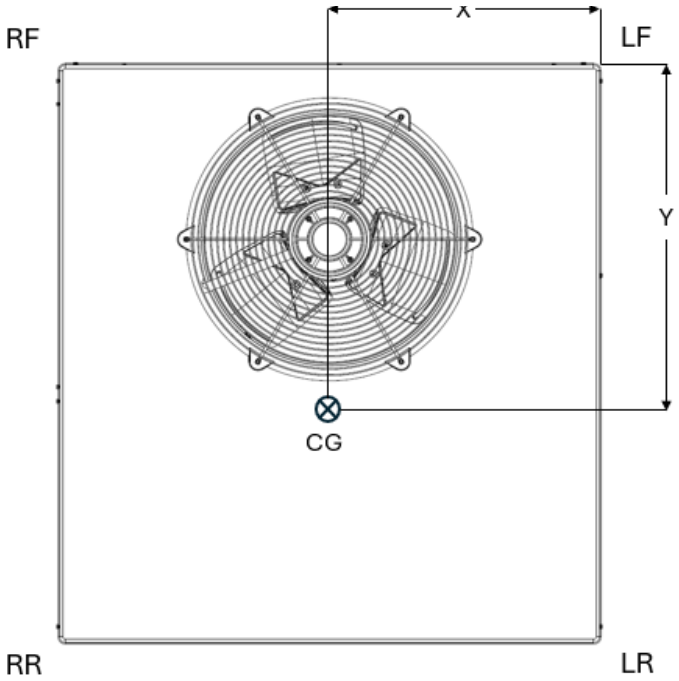

Corner and Center of Gravity Locations

NOTE: Units should be lifted at a point above center of gravity.

Model	Shipping Weight (lb)	Operating Weight (lb)	Corner Weights (lb)				X (in)	Y (in)
			LF	LR	RF	RR		
DP3CM363*	410	385	95	69	111	110	26.98	23.71
DP3CM483*	427	402	84	76	137	105	28.29	22.96
DP3CM603*	479	454	132	56	143	123	27.54	20.11

Corner Weights Table

CIRCULATING AIR AND FILTERS

Airflow Conversion

Units can easily be converted from horizontal to down discharge air flow delivery. See FIGURE 5a: HORIZONTAL FLOW DUCT COVER INSTALLATION and FIGURE 5b: DOWNFLOW DUCT COVER INSTALLATION. In down discharge or high static installations, the installer should measure the total external static and review the blower performance charts before performing the installation. In some installations it will be necessary to change the blower speed to provide proper air flow.

Horizontal Air Flow (Applies to 3-Phase Models)

3-phase models are shipped without horizontal duct covers. If needed, these kits may be ordered through Goodman’s Service Parts department.

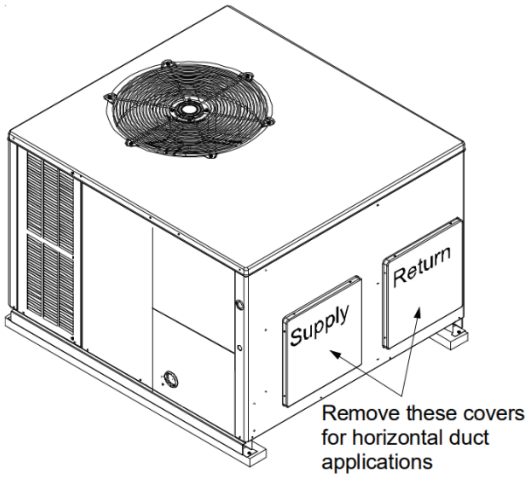

Figure 5a: Horizontal Flow Duct Cover Installation

Down Discharge Applications

Cut insulation around bottom openings and remove panels from the bottom of the unit, saving the screws holding the panels in place.

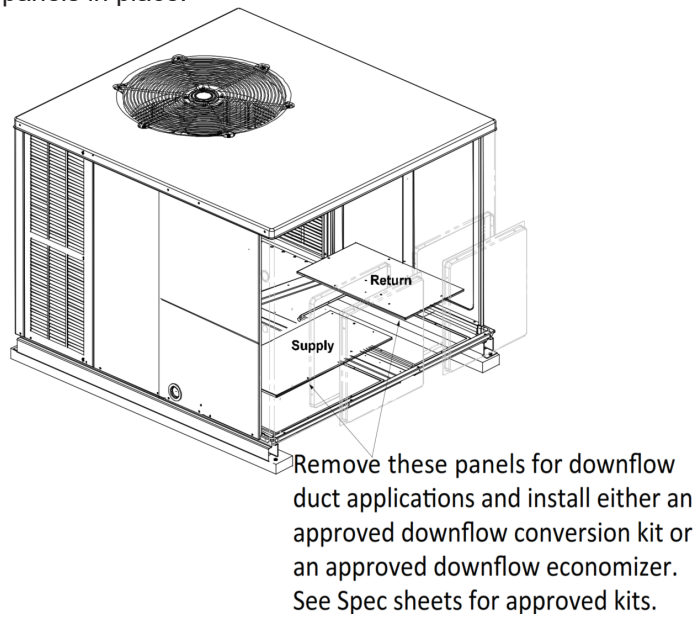

Figure 5b: Downflow Duct Cover Installation

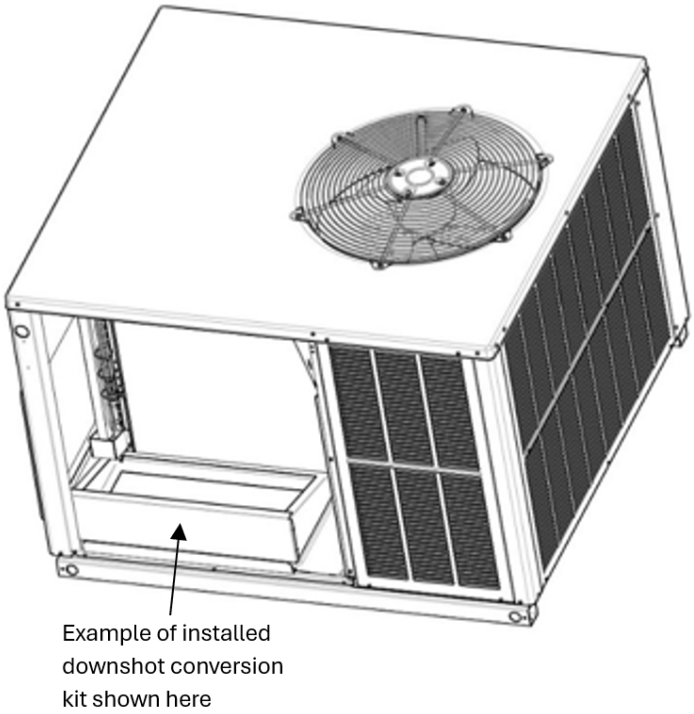

Figure 5C: Downshot Conversion Kit

NOTE: A horizontal duct cover kit and either an approved downflow conversion kit or an approved downflow economizer are required for downflow installation. Refer to the spec sheet for details.

Ducting

Ducting work should be fabricated by the installing contractor in accordance with local codes. Industry manuals may be used as a guide when sizing and designing the duct system-such as NESCA (National Environmental Systems Contractors Association, 1501 Wilson., Arlington, Virginia 22209).

The unit should be placed as close as possible to the space to be air-conditioned allowing clearance dimensions as indicated. Ducts should run as directly as possible to supply and return outlets. Use of non-flammable weatherproof flexible connectors on both supply and return connections at the unit to reduce noise transmission is recommended.

It is preferable to install the unit on the roof of the structure if the registers or diffusers are in the wall or ceiling. A slab installation is recommended when the registers are low on the wall or in the floor.

Connecting the Return and Supply Flexible Duct in Manufactured or Modular Housing Application

The return and supply fittings are to be attached at the unit to a suitable square to round duct converter. Your distributor has a factory designed square to round converter transition. The model #'s of these kits are as follows in the table below. (See Specification Sheets for Dimension details).

Accessory Description	Item Number	
	Medium Chassis	Large Chassis
Downflow Square to Round	SQRPG101/102	SQRPG103
Horizontal Square to Round	SQRPGH102	SQRPGH103

The SQRPG101, SQRPG102, and SQRPG103 fit up to the Return and Supply Downflow vents having dimensions: Return (22 ¾" x 12 ¼") and Supply (22 ¼" x 14 ¾"). The SQRPGH101, SQRPGH102, and SQRPGH103 fit up to the Horizontal Return and Supply downflow vents having dimensions: Medium Chassis (16 ½" x 16 ½") and Large Chassis (18 ½" x 18 ½"). The Medium Chassis kits transition to a 16" Diameter and the Large Chassis kits transition to an 18" Diameter (equivalent diameter, opening is oval) on the return. The collars are to be slipped into the openings, and the flanges bent around the converter. The square to round converter is attached to the flanges of the square duct openings. The flexible duct is then clamped on to the collars. Once the duct is affixed to the unit, seal the collars and flanges with a proper waterproof sealant. SEE FIGURE 6: MANUFACTURED HOME MODIFICATION KIT.

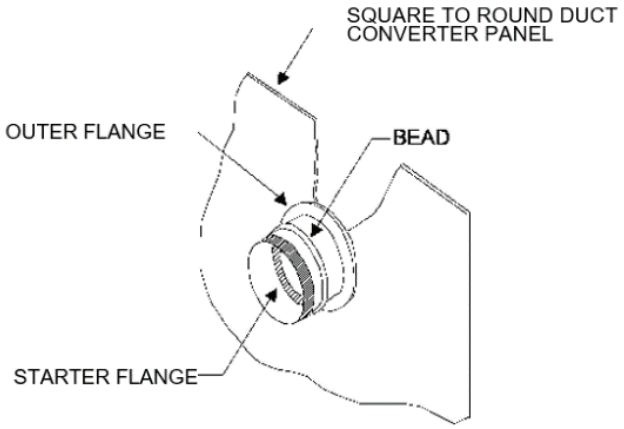

Figure 6: Manufactured Home Modification Kit

It is strongly encouraged to use appropriately sized ducts based upon the CFM for your application (unit's CFM). If duct sizing through industry manuals or air duct calculators requires larger ducts than converter openings, run larger duct size up to unit converter openings and reduce with a reducer duct fitting or transition right at the unit.

Plenum Application

A suitable plenum or square duct must be constructed. The duct cross-sectional area should be determined by industry duct sizing manuals or air duct calculators.

On ductwork exposed to outside air conditions of temperature and humidity, use an insulation with a good K factor, and a vapor barrier. Industry practices should be followed. Balancing dampers are recommended for each branch duct in the supply system. Ductwork should be properly supported from the unit. False ceilings or drop ceilings may be used as a return air plenum.

NOTE: Adequate return grills have to be supplied for each room for proper return for that space.

NOTE: Proper sealing of all ductwork and air handling compartments is extremely important to overall unit efficiency.

Filters

Filters are not provided with unit and must be supplied and externally installed in the return duct system by the installer. A field-installed filter grille is recommended for easy and convenient access to the filters for periodic inspection and cleaning. When installing filters, ensure the air flow arrows on the filter are pointing toward the circulator blower. For unit filter size information, see table below for recommended filter size.

UNIT	2 TON	2 1/2 TON	3 TON	3 1/2 TON	4 TON	5 TON
Min. Filter Size	(1)25X25X1	(1)25X25X1	(1)25X25X1	(1)25X25X1	(2)20X20X1	(2)20X20X1

CONDENSATE DRAIN PIPING

The condensate drain connection of the evaporator is a ¾" NPT half coupling. A trap must be provided to have proper condensate draining. Install condensate drain trap as shown in FIGURE 7: CONDENSATE DRAIN TRAP PLUMBING. Ensure drain connection is 3/4" or larger. Do not operate unit without trap and ensure unit is level or slightly inclined toward drain.

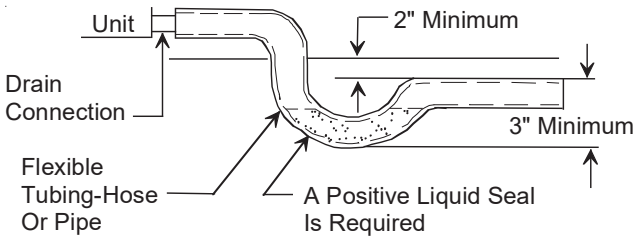

Figure 7: Condensate Drain Trap Plumbing

ELECTRICAL WIRING

WARNING

HIGH VOLTAGE!
Prior to servicing the unit or removing the compressor terminal plug or terminal cover, disconnect all electrical power from the unit. Multiple power sources may be present.

WARNING

Do not operate the compressor(s) without the terminal plug fully engaged or the terminal cover properly installed. Get away if unusual sounds are heard from within the compressor. Disconnect electrical power from the unit.

WARNING

A TRIPPED CIRCUIT BREAKER OR BLOWN FUSE MAY INDICATE THAT AN ELECTRICAL PROBLEM EXISTS. DO NOT RESET A CIRCUIT BREAKER OR REPLACE FUSES WITHOUT FIRST PERFORMING THOROUGH ELECTRICAL TROUBLESHOOTING AND TESTING PROCEDURES.

WARNING

HERMETIC COMPRESSOR ELECTRICAL TERMINAL VENTING CAN BE DANGEROUS. IN CERTAIN CIRCUMSTANCES, THE TERMINAL MAY BE EXPELLED, VENTING THE REFRIGERANT VAPOR AND COMPRESSOR OIL CONTAINED WITHIN THE COMPRESSOR HOUSING AND SYSTEM. BE ALERT FOR SOUNDS OF ARCING (SIZZLING, SPUTTERING, OR POPPING) INSIDE THE COMPRESSOR. IMMEDIATELY GET AWAY IF YOU HEAR THESE SOUNDS AND DISCONNECT ELECTRICAL POWER FROM THE UNIT.

Never operate the compressor without the terminal cover secured and properly in place or without the electrical plug fully seated and engaged to the terminal posts.

If a terminal is damaged, electrically overloaded, or short circuits to ground, there is a remote possibility that the terminal can be suddenly expelled from the terminal housing thereby venting the refrigerant and compressor oil mixture to atmosphere.

This discharge can be ignited from electrical arcing, or other open sources of ignition, and can cause potentially severe or fatal injury. This event is known as “Terminal Venting”.

To reduce the possibility of external ignition, all open flames or other heat sources must be extinguished, and all electrical power must be turned off prior to opening the terminal cover or removing the electrical plug and servicing the system.

Proper sealed system evacuation is required during servicing to maintain adequate internal system cleanliness while eliminating contaminates.

Be alert for sounds of arcing (sizzling, sputtering, or popping) inside the compressor. IMMEDIATELY GET AWAY from the unit if you hear these sounds and disconnect electrical power.

NOTE: NEVER OPERATE THE COMPRESSOR IN A VACUUM OR IN REVERSE OPERATION.

CAUTION

TO AVOID PROPERTY DAMAGE OR PERSONAL INJURY DUE TO FIRE, USE ONLY COPPER CONDUCTORS.

All wiring should be made in accordance with the National Electrical Code. The local power company should be consulted to determine the availability of sufficient power to operate the unit. The voltage, frequency, and phase at the power supply should be checked to make sure it corresponds to the unit’s RATED VOLTAGE REQUIREMENT.

Install a branch circuit fused disconnect near the unit, in accordance with the N.E.C. or local codes. Wire sizes and overcurrent protection should be determined from the unit nameplate ampacity and in accordance with N.E.C. and local building codes. Under no circumstances should wiring be sized smaller than is recommended by either of these two sources.

Fuses smaller than that recommended on the unit nameplate could result in unnecessary fuse failure or service calls. The use of protective devices of larger size than indicated could result in extensive damage to the equipment. The manufacturer bears no responsibility for damage caused to equipment as result of the use of larger than is recommended size protective devices.

All units have undergone a run test prior to packaging for shipment. This equipment has been started at minimum rated voltage and check for satisfactory operation. Do not attempt to operate this unit if the voltage is not within the minimum and maximum voltages shown on the nameplate.

The units are designed for operation at the voltage, frequency and phase as shown on the rating plate. All internal wiring in the unit is complete. It is necessary to bring in the power supply to the contactor as shown on the unit wiring diagram which is supplied with each unit. The low voltage wiring must be connected between the unit control panel and the room thermostat.

All exterior wiring must be within approved weatherproof conduit. The unit must be **permanently grounded** in accordance with local codes, or in absence of local codes with N.E.C. ANSI/NFPA NO. 70 or latest edition by using ground lug in the control box.

DO NOT EXCEED THE MAXIMUM OVERCURRENT DEVICE SIZE SHOWN ON UNIT DATA PLATE.

Fuses or HACR type circuit breakers may be used where codes permit.

Rated Voltage	Minimum Supply Voltage	Maximum Supply Voltage
208/240V	197	253

WARNING

HIGH VOLTAGE!
DISCONNECT ALL POWER BEFORE SERVICING OR INSTALLING THIS UNIT. MULTIPLE POWER SOURCES MAY BE PRESENT. FAILURE TO DO SO MAY CAUSE PROPERTY DAMAGE, PERSONAL INJURY OR DEATH.

High Voltage Wiring

3-phase – Connect three leads to terminals L1, L2, & L3 in the electrical control section, using wire sizes specified in wiring table.

Branch Circuit Ampacity	15	20	25	30	35	40	45	50
SUPPLY WIRE LENGTH - FEET								
200	6	4	4	4	3	3	2	2
150	8	6	6	4	4	4	3	3
100	10	8	8	6	6	6	4	4
50	14	12	10	10	8	8	6	6

Figure 8: Wiring Table

NOTE: The unit transformer is factory connected for 240V operation. If the unit is to operate on 208V, reconnect the transformer primary lead as shown on the unit wiring diagram.

Low Voltage Wiring

Air Conditioners – Connect 24V wires from the thermostat to the corresponding wires in the control box using No. 18 AWG as follows:

DP3CM	
Terminal	**Thermostat**
Red	R (24V)
Green	G (fan)
Yellow	Y (Cool)
White	W1 (Heat, Aux Heat Stage 1)*
Brown	W2 (Heat, Aux Heat Stage 2)*
Blue	C (Common)
*Optional field installed heat connections	

Internal Wiring

A diagram detailing the internal wiring of this unit is located on the electrical box cover. If any of the original wire supplied with the appliance must be replaced, the wire gauge and insulation must be the same as the original wiring.

1. For branch circuit wiring (main power supply to unit disconnect), the minimum wire size for the length of the run can be determined from N.E.C., local building codes, and using the circuit ampacity found on the unit rating plate. From the unit disconnect to unit, the smallest wire size allowable may be used for the ampacity, **as the Disconnect MUST be in accordance with federal, state, and local jurisdiction requirements.**
2. Wire size based on 60°C rated wire insulation and 30°C Ambient Temperature (86°F).
3. For more than 3 conductors in a raceway or cable, see the N.E.C. for derating the ampacity of each conductor.

START-UP PROCEDURE AND CHECKLIST

Begin with power turned off at ALL disconnects.

WARNING

HIGH VOLTAGE!
Disconnect all power before servicing or installing this unit. Multiple power sources may be present. Failure to do so may cause property damage, personal injury or death.

Air Conditioner Start-Up Procedure

1. Turn thermostat system switch to “Cool,” and fan switch to “Auto” and turn temperature setting as high as it will go.
2. Inspect all registers and set them to the normal open position.
3. Turn on the electrical supply at the disconnect.
4. Turn the fan switch to the “ON” position. The blower should operate after a 10 second delay.
5. Turn the fan switch to “AUTO” position. The blower should begin ramping down after an approximate 60-second delay.
6. Slowly lower the cooling temperature until the unit starts. The compressor, blower, and fan should now be operating. Allow the unit to run 10 minutes, make sure cool air is being supplied by the unit.
7. Turn the temperature setting to the highest position, stopping the unit. The indoor blower will continue to run for approximately 60 seconds.
8. Turn the thermostat system switch to “OFF” and disconnect all power when servicing the unit.

Final System Check

1. Check to see if all supply and return air grilles are adjusted and the air distribution system is balanced for the best compromise between heating and cooling.
2. Check for air leaks in the ductwork.
3. Check air flow and refrigerant charge. See Sections on **Air Flow Measurement and Adjustment and Checking Charge**.
4. Ensure the unit is free of “rattles”, and the tubing in the unit is free from excessive vibration. Also make sure tubes or lines are not rubbing against each other or sheet metal surfaces or edges. If discovered, ensure issue is corrected.
5. Set the thermostat at the appropriate setting for cooling and heating or automatic changeover for normal use.
6. Ensure the Owner is instructed on the unit operation, filter, servicing, correct thermostat operation, etc.

NOTE: The “Air Conditioner Start-up Procedure” is a recommended step as it serves as a system indicator that the unit will operate normally.

COMPONENTS

Contactor – This control is activated (closed) by the room thermostat for both heating and cooling. The contactor has a 24V coil and supplies power to the compressor and outdoor fan motor.
Crankcase Heater – This item is "ON" whenever power is supplied to the unit and crankcase heater thermostat is closed. Crankcase heater thermostat closes at 67° and opens at 85°. It warms the compressor crankcase thereby preventing liquid migration and subsequent compressor damage. The insert type heater is self-regulating. It is connected electrically to the contactor L1 & L2 terminals.
Condenser Motor – This item is activated by the contactor during heating and cooling, except during defrost and emergency heat operation.
Compressor – This item is activated by the contactor for heating and cooling, except during emergency heat. It is protected by an internal overload.
Contactor Relay – This control is activated by the thermostat (24V coil) and supplies power to the system.
Defrost Control – The Defrost control provides time/temperature initiation and termination of the defrost cycle. When a Defrost cycle is initiated, the defrost control shifts the reversing valve to "cooling" mode, stops the outdoor fan and brings on supplemental heat. Normally, a Defrost cycle will take only 2-3 minutes unless system is low on charge or outdoor conditions are severe. (Windy and cold). The defrost control also provides for a 3 minute off cycle compressor delay.
Outdoor Thermostat – These optional controls are used to prevent full electric heater operation at varying outdoor ambient (0°F to 45°F). They are normally open above their set points and closed below to permit staging of indoor supplement heater operation. If the outdoor ambient temperature is below 0°F (-18°C) with 50% or higher RH, an outdoor thermostat (OT) must be installed and set at (0°F) on the dial. Failure to comply with this requirement may result in damage to the product which may not be covered by the manufacturer's warranty.
Reversing Valve Coil – This coil is activated by the thermostat, in the colling mode and during defrost. It positions the reversing valve pilot valve for cooling operation.
Indoor Blower Motor – Units with EEM Motors Only. The EEM model indoor blower motor is activated by the room thermostat by COOLING/HEATING or fan ON position. EEM motors are constant torque motors with low power consumption.
(See Air Flow Measurement and Adjustment for speed adjustment instructions).
Blower Interlock Relay – This relay is used to energize the blower during the electric heat operation. Some room thermostats do not energize the motor during electric heat. This relay ensures blower operation when the room thermostat energizes heat. This relay is energized by the electric heat kit sequencer.

Defrost Control

During operation the power to the circuit board is controlled by a temperature sensor, which is clamped to a feeder tube entering the outdoor coil. Defrost timing periods of 30,60 and 90 minutes may be selected by setting the circuit board jumper to 30, 60 and 90 respectively. Accumulation of time for the timing period selected starts when the sensor closes (approximately 30 ± 5°F), and when the wall thermostat calls for heat. At the end of the timing period, the unit's defrost cycle will be initiated provided the sensor remains closed. When the sensor opens (approximately 60°± 5°F), the defrost cycle is terminated and the timing period is reset. If the defrost cycle is not terminated due to the sensor temperature, a twelve-minute override interrupts the unit's defrost period.

SUGGESTED FIELD TESTING/ TROUBLESHOOTING

Testing Defrost Control

NOTE: PCBDM133 Defrost controls have a three (3) minute compressor off cycle delay.

NOTE: The PCBDM133 defrost controls are shipped from the factory with the compressor delay option selected. This will de-energize the compressor contactor for 30 seconds on defrost initiation and defrost termination. If the jumper is set to normal, the compressor will continue to run during defrost initiation and defrost termination. The control will also ignore the low-pressure switch connected to R-PS1 and PS2 for 5 minutes upon defrost initiation and 5 minutes after defrost termination.

To check the defrost control for proper sequencing, proceed as follows: With power ON; unit not running.

1. Jumper defrost thermostat by placing a jumper wire across the terminals "DFT" and "R"/" R-DFT" at defrost control board.
2. Remove jumper from timer pins and jump across test pins on defrost control board.
   NOTE: Do not use screwdriver or field supplied jumper to test the control.
3. Set thermostat to call for heating. System should go into defrost within 21 seconds.
4. Immediately remove jumper from test pins.
5. Using VOM check for voltage across terminals "C & O". Meter should read 24 volts.
6. Using VOM check for voltage across fan terminals DF1 and DF2 on the board. Should read line voltage (208-230 VAC) indicating the relay is open in the defrost mode.
7. Using VOM check for voltage across "W"/"W2" & "C" terminals on the board. Should read 24 volts.
8. If not as above, replace control board.

9. Set thermostat to off position and disconnect power. Remove jumper from defrost thermostat and replace timer jumper to the desired defrost time.

NOTE: Remove jumper across defrost thermostat before returning system to service. See Figure 9: Defrost control Wiring Schematic.

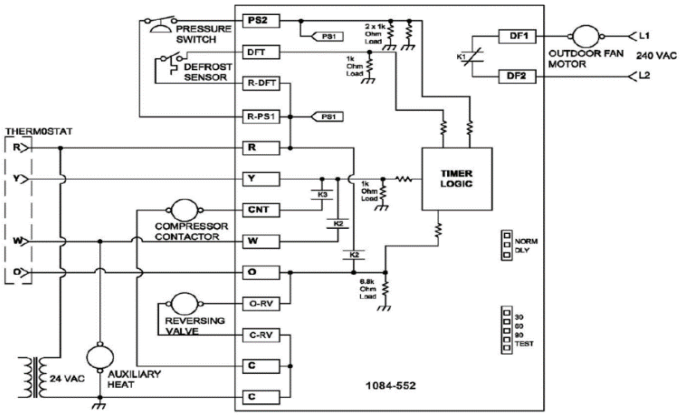

Figure 9: Defrost Control Wiring Schematic

Testing Defrost Thermostat

1. Install a thermocouple type temperature test lead on the tube adjacent to the defrost control. Insulate the lead point of contact.
2. Check the temperature at which the control closes its contacts by lowering the temperature of the control. It should close at approximately 30°F.
3. Check the temperature at which the control opens its contacts by raising the temperature of the control. It should open at approximately 60°F. If not as above, replace control.

AIR FLOW MEASUREMENT AND ADJUSTMENT

After reviewing section on DUCTING, proceed with airflow measurements and adjustments. Unit's blower curves (in Specification Sheets) are based on external static pressure (ESP, in. of W.C.). The duct openings on the unit are considered internal static pressure, so long as ESP is maintained, the unit will deliver the proper air up to the maximum static pressure listed for the CFM required by the application (i.e., home, building, etc.).

In general, 400 CFM per ton of cooling capacity is a rule of thumb. Some applications depending on the sensible and latent capacity requirements may need only 350 CFM or up to 425 CFM per ton. Check condition space load requirements (from load calculations) and equipment expanded ratings data to match CFM and capacity.
After unit is set and ducted, verify ESP with a 1" inclined manometer with pitot tubes or a Magnahelic gauge and confirm CFM to blower curves in the specification sheets. All units have multiple speed blower motors. If factory selected speed is not utilized, the speed tap can be changed.

NOTE: Never run CFM below 300 CFM per ton, evaporator freezing, or poor unit performance is possible.

Total External Static Pressure

1. Using a digital manometer measure the static pressure of the return duct at the inlet of the unit (Negative Pressure). SEE FIGURE 10: TOTAL EXTERNAL STATIC.
2. Measure the static pressure of the supply duct (Positive Pressure).
3. Add the two readings together.
   EXAMPLE:
   static reading from return duct = -.1"w.c.
   static reading from supply duct = .3"w.c.
   total external static pressure on this system =.4"w.c.

NOTE: Both readings may be taken simultaneously and read directly on the manometer if so desired.

4. Consult proper table for quantity of air.

If the external static pressure exceeds the maximum allowable static, check for closed dampers, dirty filter, undersized or poorly laid out ductwork.

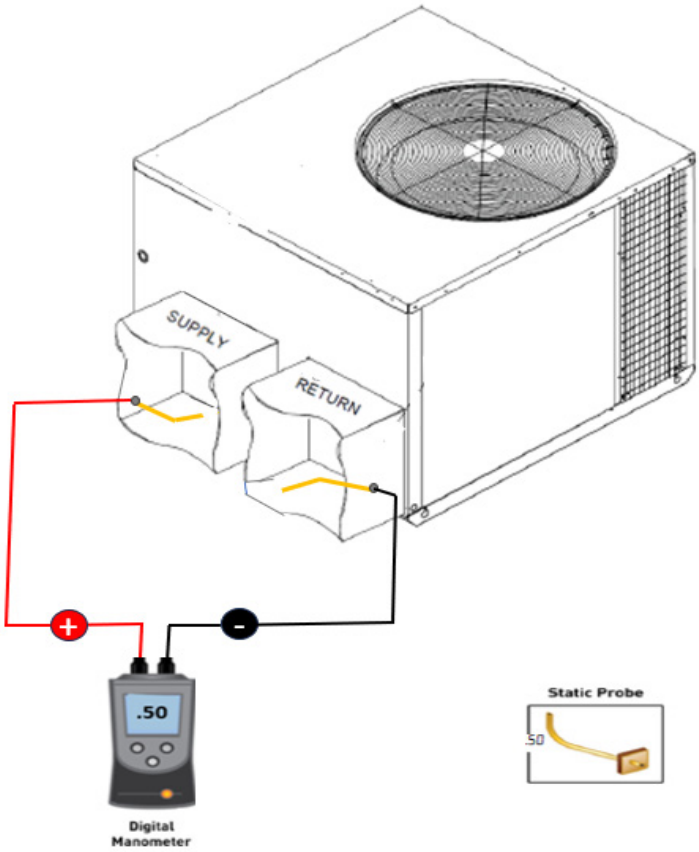

Figure 10: Total External Static

ADJUSTING SPEED TAP FOR INDOOR BLOWER MOTOR

EEM Motor

The blower motor speed for the EEM motor is controlled by three 24V low voltage leads: green, yellow, and white. The green lead sets the speed for fan-only mode. The yellow lead sets the speed for cooling.

EEM Motor Speed Adjustment

The white lead sets the speed for electric heat mode (emergency heat and second stage heat, if applicable). The leads are factory connected as follows: Green to T1, Yellow to T2, and White to T3. T1 is the low speed setting and is dedicated to fan-only mode. T2 is medium speed cooling and T3 is medium speed heating. T4 is high speed cooling and T5 is high speed heating. To adjust the blower speed, move the yellow and/or white wires to T4 and T5.

NOTE: If more than one lead is energized at the same time, the motor will use the higher speed setting.

See appendix for Blower Performance Data tables.

SUPERHEAT AND SUBCOOLING

Checking Subcooling

NOTE: Units with a TXV should be charged to Subcooling only.

EXAMPLE:

a. Liquid Line Pressure = 417 PSI
b. Corresponding Temp. = 120°F
c. Thermometer on Liquid line = 109°F.

To obtain the amount of subcooling, subtract 109°F from 120°F. The difference is 11° subcooling. See the specification sheet or technical information manual for the design subcooling range for your unit.

SUBCOOLING FORMULA = SATURATED LIQUID LINE TEMPERATURE - LIQUID LINE TEMPERATURE

Checking Superheat

EXAMPLE:
a. Suction Pressure = 143 PSI
b. Corresponding Temp. = 50°F
c. Thermometer on Suction Line = 59°F

To obtain the degrees temperature of superheat, subtract 50.0 from 59.0°F. The difference is 9° Superheat. The 9° Superheat would fall in the ± range of allowable superheat.

SUPERHEAT = SUCTION LINE TEMP - SAT. SUCTION TEMP.

Superheat Adjustment

NOTE: Superheat adjustments should not be made until indoor ambient conditions have stabilized and correct air flow (CFM) has been verified. This could take up to 24 hours depending on indoor temperature and humidity. Before checking superheat, run the unit in cooling for 15-20 minutes or until refrigerant pressure stabilizes.

NOTE: TXV adjustments should not exceed one turn clockwise (CW) or counterclockwise (CCW) from the factory setting.

Unscrew the cover from the expansion valve, locate the adjustment screw, and turn it clockwise (in) to increase superheat or counterclockwise (out) to decrease superheat. It is recommended to make small adjustments at a time, 1/8-1/4 turn increments. Replace adjustment cap. Wait a minimum of 15 minutes between adjustments to allow time for the TXV and pressures to stabilize.

Design Superheat & Subcooling					
Model	Subcooling (±1°F)	Superheat (±2°F)	Expansion device	Cooling Stage	Outdoor Ambient
DP3CM3633	-	11.0	Piston	High	95
DP3CM4833	-	8.0	Piston	High	95
DP3CM6033	12.5	13.0	TXV	High	95

Figure 11: Design Superheat and Subcooling

NOTE: Subcooling should be measured at outdoor liquid line.

NOTE: Superheat should be measured at compressor suction line.

Refrigerant Charge Check

NOTE: For optimal performance, follow charging instructions below.

Units with Expansion valve (TXV)

Single Stage Cooling Application: Refer to the Design Superheat & Subcooling table

Two-Stage Cooling Application: Run unit on Low Stage cooling and refer to Design Superheat & Subcooling table.

1. Purge gauge lines. Connect service gauge manifold to access fittings. Run system at least 10 minutes to allow pressure to stabilize.
2. Temporarily install thermometer on liquid (small) line near liquid line access fitting with adequate contact and insulate for best possible reading.
3. Check subcooling and superheat. System should have a subcooling and superheat within the range listed on the Design Superheat and Subcooling table.
   a. If subcooling and superheat are low, adjust TXV superheat, then check subcooling.
   NOTE: To adjust superheat, turn the valve stem clockwise to increase and counterclockwise to decrease. Refer to TXV Superheat Adjustment referenced in this manual.
   b. If subcooling is low and superheat is high, add charge to raise subcooling then check superheat.

c. If subcooling and superheat are high, adjust TXV valve superheat, then check subcooling.
d. If subcooling is high and superheat is low, adjust TXV valve superheat and remove charge to lower the subcooling.

NOTE: Do NOT adjust the charge based on suction pressure unless there is a gross undercharge. If an undercharge is suspected, recover the charge, re-evacuate the system, and recharge per data plate. No adjustments should be made if suspecting a charge issue.

4. Disconnect manifold set, installation is complete.

RDS Function

The mitigation system is a stationary device that detects the presence of R-32 refrigerant above 25% LFL using refrigerant sensors and then initiates mitigation actions. The mitigation system's primary function is to reduce the concentration of leaked R-32 refrigerant to prevent serious safety hazards. The mitigation actions are accomplished by halting HVAC operation and continuing indoor blower operation to provide airflow. Once refrigerant concentration reaches below a safe threshold, the unit will remain in mitigation mode for five minutes to evacuate any remaining R-32 refrigerant within the unit. Upon completion, the unit will resume its normal operation.

RDS Operation

The mitigation system is controlled by a refrigerant sensor(s), which is secured to a designated location(s) for active monitoring. If a leak is detected, HVAC operation is disabled and the indoor blower fan is activated, providing airflow at or above the minimum required airflow to evacuate excess concentration. If a Zone Control system is installed in the ductwork attached to this system, the Zone controller must be powered through a Daikin Zoning/ Accessory PCB to ensure that the Zoning Dampers open during mitigation mode to provide ventilation throughout all ducting. If the unit is installed with a communicating thermostat, the thermostat will display relevant alerts/ information concerning mitigation mode. Once sensors read concentration levels below a safe threshold, a five minute timer will initiate. Once the time is over, the unit will resume its normal operation. If the sensors detect another concentration excess, the unit will go back into mitigation mode and will repeat the same process.

Unit Compatibility

Model	Heater Kit Part #	
	HKTPD153	*HKTPD203*
DP3CM3633	X	
DP3CM4833	X	
DP3CM6033	X	X

Speed Tap Selection 0.0-0.8 E.S.P.

Model	Heater Kit Part #	
	HKTPD153	*HKTPD203*
DP3CM3633	T5	
DP3CM4833	T5	
DP3CM6033	T5	T5

ELECTRICAL HEAT INSTALLATION & ADJUSTMENT

Heater Kit (Applies to 3-Phase Models)

NOTE: A separate power supply is required for HKTP Heater Kits

Refer to the specification manual for heater kit match up and Heater Kit Electrical Data.

This series of electric cooling and heat pump package equipment is designed to accept a field installed electric heat kit. The unit is equipped to easily install the HKTP Series Electric Heat Kit. Full Installation Instructions are included in this kit. Please use this document for guidance in field equipping the package unit with electric heat. Choose the heat kit that fits the application for the specific installation. Permanently mark the unit's nameplate with the model being installed.

High and low voltage connections are detailed in the heat kit instructions. Indoor Blower motor speed tap selection may need to be modified to accommodate normal continuous operation to prevent a nuisance trip.

MAINTENANCE

WARNING

HIGH VOLTAGE!
Disconnect all power before servicing or installing this unit. Multiple power sources may be present. Failure to do so may cause property damage, personal injury or death.

The Self-Contained Package Air Conditioner should operate for many years without excessive service calls if the unit is installed properly. However, it is recommended that the homeowner inspect the unit before a seasonal start up. The coils should be free of debris so adequate airflow is achieved. The return and supply registers should be free of any obstructions. The filters should be cleaned or replaced. These few steps will help to keep the product up time to a maximum. The Troubleshooting Chart (see Appendix) should help in identifying problems if the unit does not operate properly.

Recovery

When removing refrigerant from a system, either for servicing or decommissioning, all refrigerants must be removed safely. When transferring refrigerant into cylinders, ensure that only appropriate refrigerant recovery cylinders are employed. Ensure that the correct number of cylinders for holding the total system charge is available. All cylinders to be used are designated for the recovered refrigerant and labeled for that refrigerant (i.e. special cylinders for the recovery of refrigerant). Cylinders shall be complete with pressure-relief valve and associated shut-off valves in good working order. Empty recovery cylinders are evacuated and, if possible, cooled before recovery occurs.

All recovery equipment must be suitable for the recovery of A2L refrigerant and in good working order. Ensure that you follow the manufacturer's instructions carefully. If in doubt, the manufacturer should be consulted. In addition, a set of calibrated weighing scales shall be available and in good working order. Hoses shall be complete with leak-free disconnect couplings and in good condition.

The recovered refrigerant shall be processed according to local legislation in the correct recovery cylinder, and the relevant waste transfer note arranged. Do not mix refrigerants in recovery units and especially not in cylinders.

If compressors or compressor oils are to be removed, ensure that they have been evacuated to an acceptable level to make certain that flammable refrigerant does not remain within the lubricant. The compressor body shall not be heated by an open flame or other ignition sources to accelerate this process. When oil is drained from a system, it shall be carried out safely.

Charging Procedures

In addition to conventional charging procedures, the following requirements shall be followed.

- Ensure that contamination of different refrigerants does not occur when using charging equipment. Hoses or lines shall be as short as possible to minimize the amount of refrigerant contained in them.
- Cylinders shall be kept in an appropriate position according to the instructions.
- Ensure that the REFRIGERATING SYSTEM is grounded prior to charging the system with refrigerant.
- Label the system when charging is complete (if not already).
- Extreme care shall be taken not to overfill the REFRIGERATING SYSTEM.

Prior to recharging the system, it shall be pressure tested with the appropriate purging gas. The system shall be leak-tested on completion of charging but prior to commissioning. A follow up leak test shall be carried out prior to leaving the site.

NOTE: "Earthing" is defined as achieving an earth ground by connecting the equipment's supplied grounding lug to the earth. This should be verified by a certified technician.

Clean Outdoor Coil (Qualified Servicer Only)

The coil with the outside air flowing over it should be inspected annually and cleaned as frequently as necessary to keep the finned areas free of lint, hair and debris.

Clean Indoor Coil (Qualified Servicer Only)

Before cleaning the indoor coil, A2L sensor must be removed from the unit to avoid damage and contamination. Air filters should also be removed before performing maintenance. The coil with the filtered air flowing over it should be inspected and cleaned as frequently as necessary to keep the finned areas free of debris. Coil cleaning should be performed, utilizing an approved cleaning method and cleaning agent, from inside-out (opposite operating airflow direction) to prevent damage to the tube, fin coil, and any other components. Prior to resuming unit operation, ensure to reinstall the A2L sensor.

Servicing Measures for The Refrigerant Detection System

Before servicing, identify the mode of operation of the system by reading the LED flashing pattern on the PCB within the control box and matching the LED flashing pattern with mode of operation in the A2L PCB fault code table on the wiring diagram which is attached on the back side of the control box panel (RDS PCB Fault Code Table). After identifying the mode of operation, take recommended actions as specified in the Recommended Actions for PCB LED Flashing Codes Table.

REFRIGERANT SENSORS for REFRIGERANT DETECTION SYSTEMS shall only be replaced with sensors specified by the manufacturer. If REFRIGERANT SENSOR requires replacement, please replace with Sensata R32 Sensor PN#RGD-00ML12 (Daikin PN#SER2A08012).

LED STATUS	
MODE	**LED FLASHING PATTERN**
NORMAL OPERATION	SLOW LED FLASHING PATTERN (2 SECONDS ON 2 SECONDS OFF)
R-32 LEAK ALARM	FAST LED FLASHING PATTERN
DELAY MODE	LED WILL BE ON CONTINUOUSLY
SYSTEM VERIFICATION MODE	FAST LED FLASHING PATTERN
CONTROL BOARD INTERNAL FAULT	LED WILL FLASH 2 TIMES AND THEN BE OFF FOR 5 SECONDS
R32 SENSOR COMMUNICATION FAULT	LED WILL FLASH 3 TIMES AND THEN BE OFF FOR 5 SECONDS
R32 SENSOR FAULT	LED WILL FLASH 4 TIMES AND THEN BE OFF FOR 5 SECONDS

RDS PCB Fault Code Table

TROUBLESHOOTING CODE

LED TROUBLESHOOT STATUS					
	MODE	DEFINITION	LED FLASHING PATTERN	RECOMMENDED ACTIONS	NOTES
1	Normal Operation	No faults to report.	Slow LED flashing pattern (2 seconds on and 2 seconds off)	No actions needed.	
2	R32 Leak Alarm	R32 leak is currently being detected.	Fast LED Flashing Pattern	A technician will need to find the refrigerant leak and address it. Unit shall be thawed before servicing.	In terms of the controls, no action is needed. The controls and sensor are working fine.
3	Delay Mode	After R32 leak or alarm has been cleared, the unit will remain in alarm mode for 5 minutes before returning to normal operation.	LED will be on continuously	No action needed - If the system was previously experiencing an actual R32 Leak, the refrigerant can no longer be detected by the sensor meaning it's either gone and the system won't work anymore or there was a false alarm. If the system was experiencing a Fault, the fault is gone and the system will return to normal operation in 5 min.	After any alarm or fault, it is required to remain in R32 mitigation mode for 5 minutes.
4	System Verification Mode	Manual test run by contractor to simulate R32 Leak Alarm (test will last for 5 minutes max).	Fast LED Flashing Pattern	No actions needed.	To enter system verification test mode, press the button on the control 2 times within 5 seconds. The control will enter a simulated R32 Leak Alarm state and remain in that mode for 5 minutes. After 5 minutes, the control will return to Normal Operation automatically. If the contractor wants to end the test early they need to press the button one time.
5	Control Board Internal Fault	Control board has detected an issue with the R32 detection system.	LED will flash 2 times and then be off for 5 seconds, before repeating pattern	1) Unplug and plug the R32 sensor back in. Cycle power to the system. 2) If the control is in "Normal Operation" or "Delay Mode", there is no more issue. If not, continue with diagnostics 3) Unplug R32 sensor and leave unplugged. Cycle power to the system 4) If the control still displays "Control Board Internal Fault" (2 flash pattern), replace the control. If the control now displays "R32 Sensor Communication Fault" (3 flash pattern), replace the sensor.	This error could indicate an on board relay failure or a short with the sensor communications. A sensor communication short could occur on the board itself or external to the board. These steps will determine if the error is on the board or external to the board.
6	R32 Sensor Communication Fault	Control board does not have communications with R32 sensor.	LED will flash 3 times and then be off for 5 seconds, before repeating pattern	1) Unplug and plug the R32 sensor back in. Cycle power to the system. 2) If control is in "Normal Operation" or "Delay Mode", there is no more issue. If not, continue with diagnostics. 3) If the control still displays "R32 Sensor Communication Fault" (3 flash pattern), replace both the sensor and the PCB.	If the control cannot talk to the sensor there could be a problem with the sensor, a problem with the sensor harness or a problem internal to the control. The field will not be able to measure anything to reliably fix this error assuming the connector is properly secured to the control. Replacing both is the only option.
7	R32 Sensor Fault	R32 Sensor has reported an internal issue.	LED will flash 4 times and then be off for 5 seconds, before repeating pattern	Replace R32 sensor.	Communications to the sensor are perfectly fine. The sensor itself is reporting an internal fault.

RECOMMENDED ACTIONS FOR PCB LED FLASHING CODES TABLE

	warning; flammable materials
	service indicator; read technical manual
	operator's manual; operating instructions
	warning; low burning velocity material
	UN GHS flame symbol

MARKING SYMBOL TABLE

TROUBLESHOOTING CHART

WARNING

HIGH VOLTAGE!
Disconnect ALL power before servicing or installing this unit. Multiple power sources may be present. Failure to do so may cause property damage, personal injury or death.

SYMPTOM	POSSIBLE CAUSE	REMEDY
High head - low suction	a. Restriction in liquid line or flowrator	a. Remove or replace with proper size flowrator.
High head - high or normal suction	a. Dirty condenser coil b. Overcharged c. Condenser fan not running	a. Clean coil b. Correct System charge c. Repair or Replace
Low head - high suction	a. Incorrect flowrator b. Defective compressor valves c. Flowrator not seating properly	a. Replace with correct flowrator b. Replace compressor c. Check for debris under flowrator or deformed flowrator. Remove debris or replace flowrator.
Unit will not run	a. Power off or loose electrical connection b. Thermostat out of calibration set too high c. Defective contactor d. Blown fuses or tripped breaker e. Transformer defective f. High or low pressure control open (Optional) g. Compressor overload contacts open	a. Check for unit voltage at contactor in unit b. Reset c. Check for 24 volts at contactor coil replace if contacts are open d. Replace fuse or reset breaker Check wiring - replace transformer f. Reset high pressure control or check unit charge High pressure control opens at 610 psig Low pressure control opens at 22 psig g. Replace compressor NOTE: Wait at least 2 hours for overload to reset
Condenser fan runs, compressor doesn't	a. Loose connection b. Compressor stuck, grounded or open winding open internal overload c. Low voltage connection d. Capacitor weak, open, or shorted	a. Check for unit voltage at compressor check & tighten all connections b. Wait at least 2 hours for overload to reset If still open, replace the compressor. c. At compressor terminals, voltage must be within 10 % of nameplate volts when unit is operating d. Check capacitor. If not within specification, replace.
Low suction - cool compressor Iced evaporator coil	a. Low indoor airflow	a. Increase speed of blower or reduce restriction - replace air filters
Compressor short cycles	a. Defective overload protector b. Unit cycling on low pressure control c. High pressure switch cuts out	a. Replace - check for correct voltage b. Check refrigerant charge and / or airflow c. Check airflow (Indoor & outdoor)
Registers sweat	a. Low airflow	a. Increase speed of blower or reduce restriction replace air filters
High suction pressure	a. Excessive load b. Defective compressor c. Reversing valve not seating properly.	a. Recheck load calculation b. Replace c. Replace
Insufficient cooling	a. Improperly sized unit b. Improper airflow c. Incorrect refrigerant charge. d. Incorrect voltage	a. Recalculate load b. Check - should be approximately 400 CFM per ton c. Charge per procedure attached to unit service panel d. At compressor terminals, voltage must be within 10% of nameplate volts when unit is operating
Evaporator coil freezing or frosting	a. Low airflow b. Low refrigerant charge c. Operating unit in cooling mode below 65°F outdoor temperature	a. Check - should be approximately 400 CFM per ton, dirty air filters, all duct outlets open b. Properly charge unit c. Install or check low ambient control, should be open below 65°F outdoor temperature

DP3CM[36-60]3*** BLOWER PERFORMANCE DATA

Horizontal Flow												
Model	Motor Tap	Compressor stage	Volts	E.S.P. (In. of H_2O)								
					0.1	0.2	0.3	0.4	0.5	0.6	0.7	0.8
DP3CM3633**	T1	Single stage	230	CFM	1070	1030	980	935	870	775	720	665
				Watts	145	161	165	173	181	190	198	202
	T2/T3	Single stage	230	CFM	1432	1382	1332	1286	1242	1198	1136	1084
				Watts	225	235	248	258	270	281	291	304
	T4/T5	Single stage	230	CFM	1505	1465	1420	1385	1335	1300	1250	1205
				Watts	359	371	384	383	393	398	406	416
DP3CM4833**	T1	Single stage	230	CFM	1355	1300	1250	1210	1155	1110	1045	965
				Watts	212	228	230	246	248	261	273	282
	T2/T3	Single stage	230	CFM	1745	1705	1664	1623	1586	1533	1494	1459
				Watts	414	425	437	448	460	468	475	481
	T4/T5	Single stage	230	CFM	1895	1855	1805	1770	1730	1685	1640	1600
				Watts	558	558	578	584	590	594	602	612
DP3CM6033**	T1	Single stage	230	CFM	1360	1300	1260	1215	1175	1125	1058	1030
				Watts	213	221	233	244	255	264	273	293
	T2/T3	Single stage	230	CFM	2001	1964	1923	1882	1840	1760	1697	1654
				Watts	544	3030	575	583	592	605	615	622
	T4/T5	Single stage	230	CFM	2000	1960	1925	1875	1835	1800	1760	1725
				Watts	642	651	660	651	672	683	691	699

DP3CM[36-60]3*** BLOWER PERFORMANCE DATA

Down Flow												
Model	Motor Tap	Compressor stage	Volts	E.S.P. (In. of H_2O)								
					0.1	0.2	0.3	0.4	0.5	0.6	0.7	0.8
DP3CM3633**	T1	Single stage	230	CFM	1006	968	921	879	818	729	677	625
				Watts	149	165	169	177	186	195	203	207
	T2/T3	Single stage	230	CFM	1340	1288	1241	1248	1181	1119	1055	970
				Watts	254	224	226	261	279	289	303	330
	T4/T5	Single stage	230	CFM	1415	1377	1335	1302	1255	1222	1175	1133
				Watts	368	380	394	393	403	408	416	426
DP3CM4833**	T1	Single stage	230	CFM	1274	1222	1175	1137	1086	1043	982	907
				Watts	217	234	236	252	254	268	280	289
	T2/T3	Single stage	230	CFM	1750	1707	1660	1614	1569	1524	1475	1419
				Watts	406	421	433	445	457	466	473	475
	T4/T5	Single stage	230	CFM	1781	1744	1697	1664	1626	1584	1542	1504
				Watts	572	572	592	599	605	609	617	627
DP3CM6033**	T1	Single stage	230	CFM	1278	1222	1184	1142	1105	1058	1020	968
				Watts	218	227	239	250	261	271	280	300
	T2/T3	Single stage	230	CFM	1964	1923	1882	1840	1790	1715	1650	1607
				Watts	543	561	567	582	593	605	617	625
	T4/T5	Single stage	230	CFM	1880	1842	1810	1763	1725	1692	1654	1622
				Watts	658	667	677	667	689	700	708	716

NOTES:

- Data shown is dry coil. Wet coil pressure drop is approximately: 0.1” H2O, for two-row indoor coil; 0.2” H2O, for three-row coil; and 0.3” H2O, for four-row indoor coil.
- Data shown does not include filter pressure drop, approx. 0.08” H2O.
- Reduce airflow by 2% for 208-volt operation.

UNIT DIMENSIONS

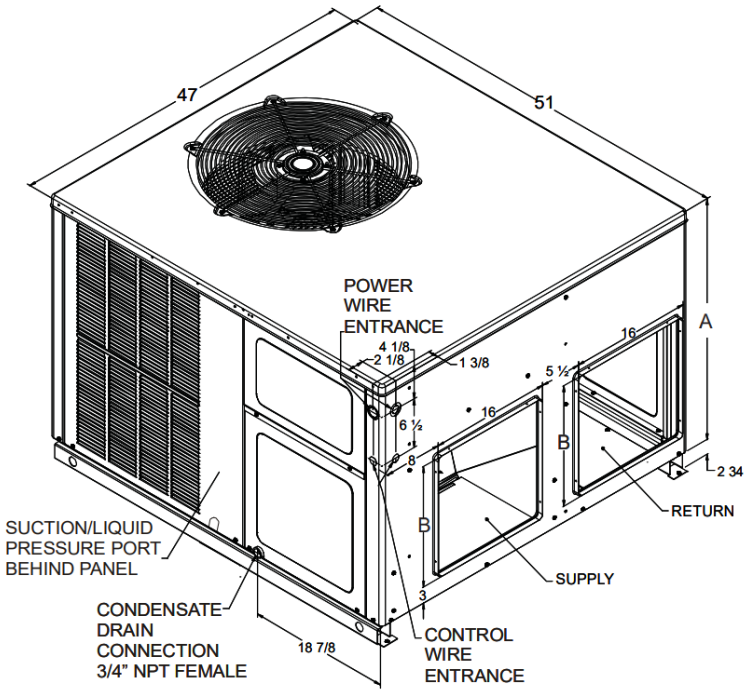

Model	Unit Dimensions				Chassis Size
			Height		
	W	D	A	B	
DP3CM3633	47	51	40	18	Large
DP3CM4833	47	51	40	18	Large
DP3CM6033	47	51	40	18	Large

LARGE CHASSIS

DP3CM363*

DP3CM483*

DP3CM603*

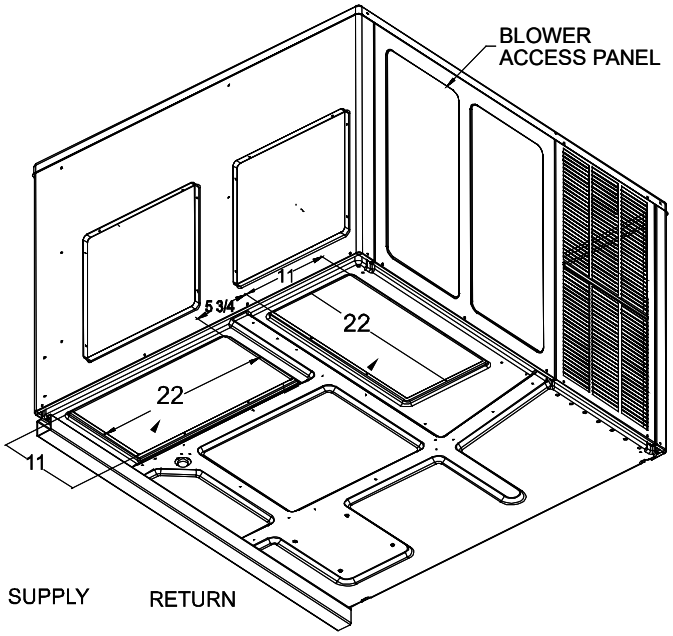

MINIMUM CLEARANCES

NOTE: Roof overhang
Should be no more than 48”

Model	Duct Openings			
	Supply		Return	
	W	H	W	H
DP3CM3633	16	18	16	18
DP3CM4833	16	18	16	18
DP3CM6033	16	18	16	18

WARNING

HIGH VOLTAGE! DISCONNECT ALL POWER BEFORE SERVICING. MULTIPLE POWER SOURCES MAY BE PRESENT. FAILURE TO DO SO MAY CAUSE PROPERTY DAMAGE, PERSONAL INJURY OR DEATH.

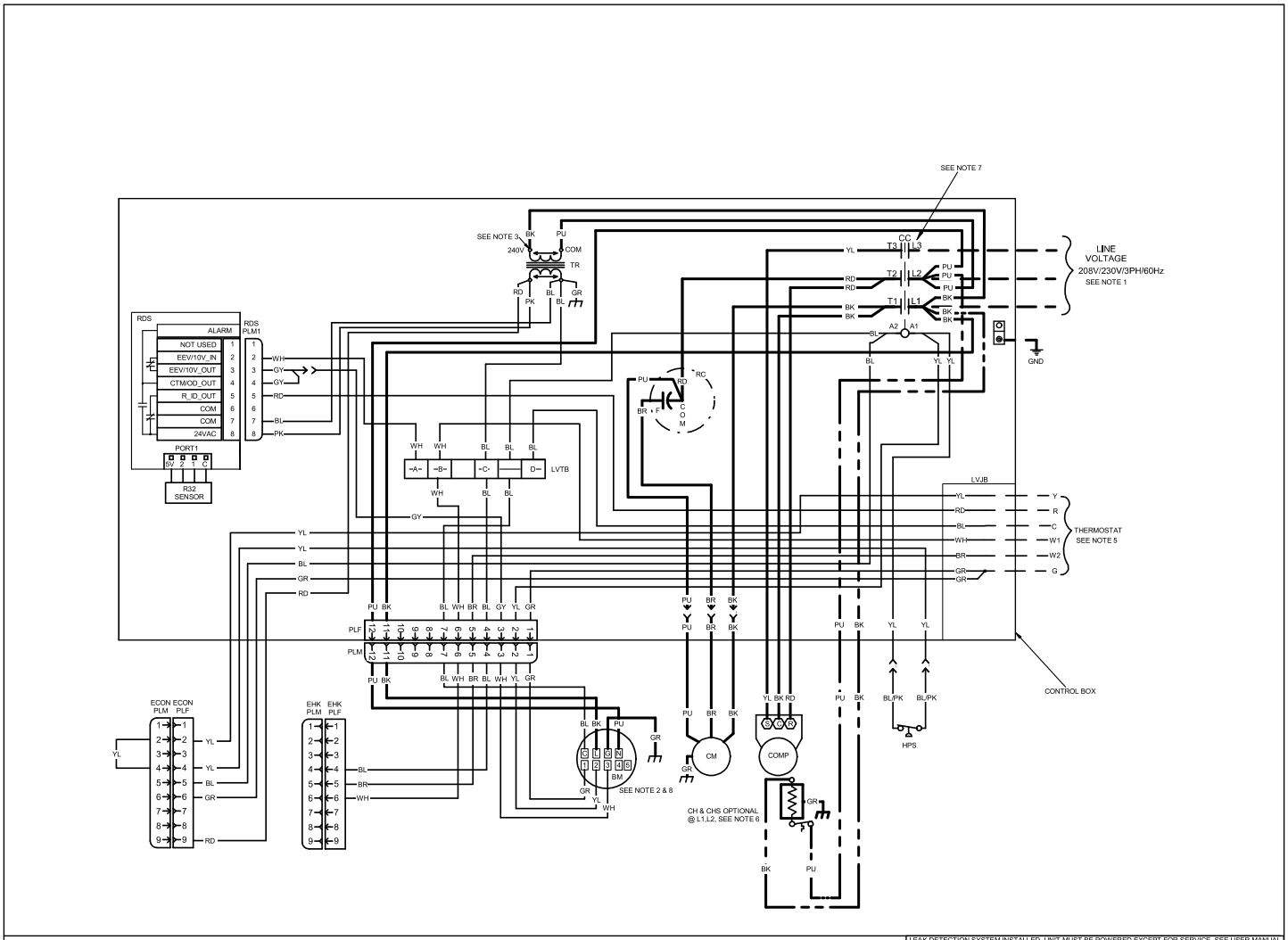

NOTES:

1. REPLACEMENT WIRE MUST BE SAME SIZE AND TYPE OF INSULATION AS ORIGINAL (AT LEAST 105°C). USE COPPER CONDUCTORS ONLY. USE NEC CLASS 2 WIRE FOR ALL LOW VOLTAGE FIELD CONNECTIONS.
2. TO CHANGE BLOWER MOTOR SPEED MOVE YELLOW AND WHITE LEADS FROM BM "2" AND "3" TO "4" AND "5". IF BOTH LEADS ARE ENERGIZED, THE HIGHER SPEED SETTING IS USED.
3. FOR 208 VOLT TRANSFORMER OPERATION MOVE BLACK WIRE FROM TERMINAL 3 TO TERMINAL 2 ON TRANSFORMER.
4. START ASSIST FACTORY EQUIPPED WHEN REQUIRED
5. USE COPPER CONDUCTORS ONLY USE N.E.C. CLASS 2 WIRE
6. CRANKCASE HEATER (OPTIONAL)
7. DOUBLE POLE CONTACTOR SHOWN. SINGLE POLE CONTACTOR COULD BE FACTORY EQUIPPED AS AN ALTERNATE CONFIGURATION.
8. FOR 3-PHASE APPLICATIONS, "N" ONLY DESIGNATES A CONNECTION POINT AND IS NOT A NEUTRAL.

SEE UNIT RATING PLATE FOR TYPE AND SIZE OF OVER CURRENT PROTECTION

COMPONENT LEGEND

BM	BLOWER MOTOR	LVJB	LOW VOLTAGE JUNCTION BOX
CC	COMPRESSOR CONTACTOR	LVTB	LOW VOLTAGE TERMINAL BLOCK
CH	CRANKCASE HEATER	PLF	FEMALE PLUG/CONNECTOR
CHS	CRANKCASE HEATER SWITCH	PLM	MALE PLUG/CONNECTOR
CM	CONDENSER MOTOR	RC	RUN CAPACITOR
COMP	COMPRESSOR	RDS	REFRIGERANT DETECTION SYSTEM
ECON	ECONOMIZER	TR	TRANSFORMER
EHK	ELECTRIC HEATER KIT		
GND	EQUIPMENT GROUND		
HPS	HIGH PRESSURE SWITCH		

JUNCTION
TERMINAL
SWITCH (PRESS.)
CONNECTOR
EQUIPMENT GROUND
FIELD GROUND
FIELD SPLICE
SWITCH (TEMP)

LEAK DETECTION SYSTEM INSTALLED. UNIT MUST BE POWERED EXCEPT FOR SERVICE. SEE USER MANUAL FOR MORE DETAILS.

RED LED'S STATUS	MODE	CHECK
1 FLASH	STARTUP MODE	-
SLOW LED FLASHING	NORMAL OPERATION	-
FAST LED FLASHING	R-32 LEAK ALARM	LEAK DETECTED. FIND AND REPAIR THE SOURCE OF THE LEAK.
LED ON CONTINUOUSLY	DELAY MODE	MODE WILL CLEAR AFTER 5 MINUTES.
FAST LED FLASHING	SYSTEM VERIFICATION MODE	USER ACTIVATED TEST MODE.
2 FLASHES	INTERNAL FAULT	REPLACE CONTROL BOARD.
3 FLASHES	R-32 SENSOR COMMUNICATION FAULT	VERIFY REFRIGERANT SENSOR WIRING. REPLACE SENSOR. REPLACE CONTROL BOARD.
4 FLASHES	R-32 SENSOR FAULT	REPLACE SENSOR.

WIRE CODE

BK	BLACK
BL	BLUE
BR	BROWN
GR	GREEN
GY	GRAY
OR	ORANGE
PK	PINK
PU	PURPLE
RD	RED
WH	WHITE
YL	YELLOW
BL/PK	BLUE/PINK STRIPE

WIRING

- HIGH VOLTAGE
- LOW VOLTAGE
- FIELD INSTALLED POWER
- FIELD INSTALLED CONTROL
- OPTIONAL HIGH VOLTAGE
- OPTIONAL LOW VOLTAGE

0140G04685-A

Wiring is subject to change. Always refer to the wiring diagram on the unit for the most up-to-date wiring.

PACKAGE UNITS - AC UNITS
HOMEOWNER'S ROUTINE MAINTENANCE RECOMMENDATIONS

WE STRONGLY RECOMMEND A BI-ANNUAL MAINTENANCE CHECKUP BE PERFORMED BY A QUALIFIED SERVICE AGENCY BEFORE THE HEATING AND COOLING SEASONS BEGIN.

WARNING

HIGH VOLTAGE!
DISCONNECT ALL POWER BEFORE SERVICING OR INSTALLING THIS UNIT. MULTIPLE POWER SOURCES MAY BE PRESENT. FAILURE TO DO SO MAY CAUSE PROPERTY DAMAGE, PERSONAL INJURY OR DEATH.

REPLACE OR CLEAN FILTER

IMPORTANT NOTE: NEVER OPERATE UNIT WITHOUT A FILTER INSTALLED AS DUST AND LINT WILL BUILD UP ON INTERNAL PARTS RESULTING IN LOSS OF EFFICIENCY, EQUIPMENT DAMAGE AND POSSIBLE FIRE.

A return air filter is not supplied with this unit; however, there must be a means of filtering the return air. An indoor air filter must be used with your comfort system. A properly maintained filter will keep the indoor coil of your comfort system clean. A dirty coil could cause poor operation and/or severe equipment damage. The installer of your unit can tell you where your filter(s) are and how to clean or replace them.

Check your return filter(s) at least once every two months. When they are dirty, replace or clean as required. Disposable type filters should be replaced. Reusable type filters may be cleaned. **NOTE: REUSABLE TYPE FILTERS SHOULD BE WASHED WITH WARM WATER, DRIED COMPLETELY AND SPRAYED WITH AN ADHESIVE ACCORDING TO THE MANUFACTURERS RECOMMENDATIONS.**

You may want to ask your dealer about high efficiency filters. High efficiency filters are available in both electronic and non-electronic types. These filters can do a better job of catching small airborne particles.

Improper filter maintenance is the most common cause of inadequate heating or cooling performance. Filters should be cleaned (permanent) or replaced (disposable) every two months or as required. When replacing a filter, it must be replaced with a filter of the same type and size and always make certain the air flow arrows on the filter point in the proper direction.

CONDENSER AND EVAPORATOR MOTORS

The bearings on the air circulating blower motor and condenser motor are permanently lubricated and require no further lubrication.

COMPRESSOR

The compressor motor is hermetically sealed and does not require additional oiling.

ALUMINUM INDOOR COIL CLEANING (QUALIFIED SERVICER ONLY)

This unit is equipped with an aluminum tube evaporator coil. The safest way to clean the evaporator coil is to simply flush the coil with water. This cleaning practice remains as the recommended cleaning method for both copper tube and aluminum tube residential cooling coils.

An alternate cleaning method is to use one of the products listed in the technical publication TP-109 (shipped in the literature bag with the unit) to clean the coils. The cleaners listed are the only agents deemed safe and approved for use to clean round tube aluminum coils. TP-109 is available on the web site in Partner Link > Service Toolkit.

NOTE: ENSURE COILS ARE RINSED WELL AFTER USE OF ANY CHEMICAL CLEANERS.

ANNUAL INSPECTION (QUALIFIED SERVICER ONLY)

Your package unit should be inspected by a qualified installer, or service agency at least twice every year. This check should be performed before the heating and cooling seasons begin. This will ensure that the system is performing properly and safely. Repair as necessary.

- Check physical support of the unit. Ensure it is sound without any sagging, cracks, or gaps, around the base.
- Check for obvious signs of deterioration of the unit.
- Check both condenser and evaporator coil to make sure each are clean.
- Return Air Connection. Check for physical soundness and ensure that the connection is firmly sealed to the package unit casing.
- Wiring. Check wires for damage. Check electrical connections for tightness and/or corrosion.
- Filters. Check that filters are clean and in the proper placement in the unit or duct system.
- Louvers. Inspect air inlet louvers inside the heat exchanger compartments. Ensure the area is clean and free of dirt and debris.

BEFORE CALLING YOUR SERVICER

- Check the thermostat to confirm that it is properly set.
- Check the disconnect switch near the unit to confirm that it is closed.
- Check the electrical panel for tripped circuit breakers or open fuses . Reset the circuit breakers or replace fuses as necessary.
- Check for blockage of the indoor air inlets and outlets. Confirm that they are open and have not been blocked by objects (rugs, curtains or furniture).
- Check for obstructions on the unit . Confirm that it has not been covered on the sides or the top. Remove any obstruction that can be safely removed. If the unit is covered with dirt or debris, call a qualified servicer to clean it.
- Check the filter. If it is dirty, clean or replace it.

START-UP CHECKLIST

Residential Package - (Indoor Section)					
	Model Number	_____			
	Serial Number	_____			
ELECTRICAL					
Line Voltage (Measure L1 and L2 Voltage)	L1 - L2	_____			
Secondary Voltage (Measure Transformer Output Voltage)	R - C	_____			
Blower Amps		_____			
Heat Strip 1 - Amps		_____			
Heat Strip 2 - Amps		_____			
BLOWER EXTERNAL STATIC PRESSURE					
Return Air Static Pressure		_____	IN. W.C.		
Supply Air Static Pressure		_____	IN. W.C.		
Total External Static Pressure (Ignoring +/- from the reading above, add total here)		_____	IN. W.C.		
TEMPERATURES					
Return Air Temperature (Dry bulb / Wet bulb)		_____	DB °F	_____	WB °F
Cooling Supply Air Temperature (Dry bulb / Wet bulb)		_____	DB °F	_____	WB °F
Heating Supply Air Temperature		_____	DB °F		
Temperature Rise		_____	DB °F		
Delta T (Difference between Supply and Return Temperatures)		_____	DB °F		
GAS PRESSURES					
Gas Inlet Pressure		_____	IN. W.C.		
Gas Manifold Pressure (Low Fire)		_____	IN. W.C.		
Gas Manifold Pressure (High Fire)		_____	IN. W.C.		
Gas Type (NG) = Natural Gas / (LP) = Liquid Propane		_____			

Residential Package - (Outdoor Section)					
ELECTRICAL					
Supply Voltage (Measure L1 and L2 Voltage)	L1 - L2	_____			
Compressor Amps		_____			
Condenser Fan Amps		_____			
PRESSURES / TEMPERATURES					
Suction Circuit (Pressure / Suction Line Temperature)	PSIG	_____	TEMP	_____	°F
Liquid Circuit (Pressure / Liquid Temperature)	PSIG	_____	TEMP	_____	°F
Outdoor Air Temperature (Dry bulb / Wet bulb)		_____	DB °F	_____	WB °F
SUPERHEAT / SUBCOOLING	SH	_____	SC	_____	

Additional Checks	
Check wire routings for any rubbing	_____
Check product for proper draining	_____
Check for kinked pressure switch tubing.	_____
Check flue elbow for alignment and clamp tightness.	_____
Check screw tightness on blower wheel.	_____
Check factory wiring and wire connections.	_____
Check screw tightness on Outdoor Motor and Blade	_____
Check product for proper clearances as noted by installation instructions	_____

°F to °C formula: (°F - 32) divided by 1.8 = °C °C to °F formula: (°C multiplied by 1.8) + 32 = °F

THIS PAGE IS LEFT INTENTIONALLY BLANK.

THIS PAGE IS LEFT INTENTIONALLY BLANK.

THIS PAGE IS LEFT INTENTIONALLY BLANK.

CUSTOMER FEEDBACK
Daikin Comfort Technologies is very interested in all product comments.
Please fill out the feedback form on the following link:
https://daikincomfort.com/contact-us
You can also scan the QR code on the right to be directed to the feedback page.

Our continuing commitment to quality products may mean a change in specifications without notice.

© 2025 Daikin Comfort Technologies Manufacturing, Inc.
19001 Kermier Rd., Waller, TX 77484
www.daikincomfort.com