DHC SERIES

LIGHT COMMERCIAL PACKAGED AIR CONDITIONER UNIT 7.5 TO 12.5 TON

INSTALLATION INSTRUCTIONS

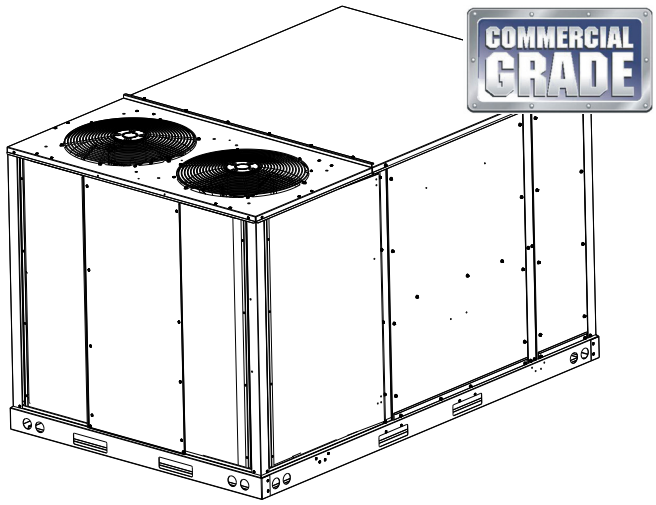

AHRI CERTIFIED®
www.ahridirectory.org
Unitary Large AC
AHRI Standard 340/360
Certification applies only when the complete system is listed with AHRI.

c ETL LISTED us
Intertek

ATTENTION INSTALLING PERSONNEL:

Prior to installation, thoroughly familiarize yourself with this Installation Manual. Observe all safety warnings. During installation or repair, caution is to be observed.

It is your responsibility to install the product safely and to educate the customer on its safe use.

RECOGNIZE THIS SYMBOL AS A SAFETY PRECAUTION

These installation instructions cover the outdoor installation of single package heating and cooling units. See the Accessories Guide applicable to your model for information regarding accessories.

NOTE: Please contact your distributor or our website for the applicable Specification Sheet referred to in this manual.

WARNING

ONLY PERSONNEL THAT HAVE BEEN TRAINED TO INSTALL, ADJUST, SERVICE, MAINTENANCE OR REPAIR (HEREINAFTER, "SERVICE") THE EQUIPMENT SPECIFIED IN THIS MANUAL SHOULD SERVICE THE EQUIPMENT.

THIS EQUIPMENT IS NOT INTENDED FOR USE BY PERSONS (INCLUDING CHILDREN) WITH REDUCED PHYSICAL, SENSORY OR MENTAL CAPABILITIES, OR LACK OF EXPERIENCE AND KNOWLEDGE, UNLESS THEY HAVE BEEN GIVEN SUPERVISION OR INSTRUCTION CONCERNING USE OF THE APPLIANCE BY A PERSON RESPONSIBLE FOR THEIR SAFETY.

CHILDREN SHOULD BE SUPERVISED TO ENSURE THAT THEY DO NOT PLAY WITH THE EQUIPMENT.

THE MANUFACTURER WILL NOT BE RESPONSIBLE FOR ANY INJURY OR PROPERTY DAMAGE ARISING FROM IMPROPER SUPERVISION, SERVICE OR SERVICE PROCEDURES. IF YOU SERVICE THIS UNIT, YOU ASSUME RESPONSIBILITY FOR ANY INJURY OR PROPERTY DAMAGE WHICH MAY RESULT. IN ADDITION, IN JURISDICTIONS THAT REQUIRE ONE OR MORE LICENSES TO SERVICE THE EQUIPMENT SPECIFIED IN THIS MANUAL, ONLY LICENSED PERSONNEL SHOULD SERVICE THE EQUIPMENT. IMPROPER SUPERVISION, INSTALLATION, ADJUSTMENT, SERVICING, MAINTENANCE OR REPAIR OF THE EQUIPMENT SPECIFIED IN THIS MANUAL, OR ATTEMPTING TO INSTALL, ADJUST, SERVICE OR REPAIR THE EQUIPMENT SPECIFIED IN THIS MANUAL WITHOUT PROPER SUPERVISION OR TRAINING MAY RESULT IN PRODUCT DAMAGE, PROPERTY DAMAGE, PERSONAL INJURY OR DEATH.

WARNING

DO NOT BYPASS SAFETY DEVICES

QUEBEC DISCLOSURE REGARDING AVAILABILITY OF REPLACEMENT PARTS, REPAIR SERVICES AND INFORMATION FOR MAINTENANCE AND REPAIR: Daikin Comfort Technologies Manufacturing, Inc. (Daikin) does not guarantee the availability of (1) replacement parts; (2) repair services; and (3) information necessary to maintain or repair products, within the meaning of section 39.1 of the Consumer Protection Act, CQLR, c P-40.1 and section 79.18 of the Regulation respecting the application of the Consumer Protection Act, CQLR, c P-40.1, r. 3.

IOD-1073B
11/2025

Our continuing commitment to quality products may mean a change in specifications without notice.
© 2025 Daikin Comfort Technologies Manufacturing, Inc.
19001 Kermier Rd., Waller, TX 77484
www.daikincomfort.com

AVIS POUR LE QUÉBEC CONCERNANT LA DISPONIBILITÉ DES PIÈCES DE RECHANGE, DES SERVICES DE RÉPARATION ET DES RENSEIGNEMENTS POUR L'ENTRETIEN ET LA RÉPARATION :
DAIKIN COMFORT TECHNOLOGIES MANUFACTURING, INC. (DAIKIN) NE GARANTIT PAS LA DISPONIBILITÉ (1) DES PIÈCES DE RECHANGE, (2) DES SERVICES DE RÉPARATION ET (3) DES RENSEIGNEMENTS POUR L'ENTRETIEN ET LA RÉPARATION, AU SENS DE L'ARTICLE 39.1 DE LA LOI SUR LA PROTECTION DU CONSOMMATEUR, RLRQ C P-40.1 ET DE L'ARTICLE 79.18 DU RÈGLEMENT D'APPLICATION DE LA LOI SUR LA PROTECTION DU CONSOMMATEUR, RLRQ C P-40.1, R 3.

Index

Replacement Parts 2
Safety Instructions 2
General Information 3
Unit Location 5
Clearances 6
Roof Curb Post-Installation Checks 7
Roof Top Duct Connections 7
Rigging Details 7
Weights and Center of Gravity 8
Electrical Wiring 9
Circulating Air and Filters 11
Condensate Drain Connection 11
Startup, Adjustments, and Checks 12
Standing Pressure Test/ Leak Detection Method 19
Altitude Adjustment Factor Table 20
Maintenance 21
Appendix A Blower Performance Tables 23
Appendix B Electrical Data 43
Appendix C Unit Dimensions 65
Appendix D Wiring Diagrams 66
Appendix E Airflow for Electric Heat 72
Startup Checklist 73

REPLACEMENT PARTS

Ordering Parts

When reporting shortages or damages report this to https://www.goodmanmfg.com/logistics-feedback. When ordering repair parts give the complete unit model and serial numbers as stamped on the unit's nameplate.

Refrigerant sensors for refrigerant detection systems shall only be replaced with sensors specified by the manufacturer.

Replacement parts for this appliance are available through your contractor or local distributor. Your nearest distributor can be located online at www.daikincomfort.com/ or by contacting:

EQUIPMENT SUPPORT
DAIKIN COMFORT TECHNOLOGIES
MANUFACTURING, INC.
19001 KERMIER ROAD
WALLER, TEXAS 77484
855-DAIKIN-1

SAFETY INSTRUCTIONS

RECOGNIZE THIS SYMBOL AS A SAFETY PRECAUTION

These installation instructions cover the outdoor installation of single package heating and cooling units. See the Accessories guide applicable to your model for information regarding accessories.

***NOTE:** Please contact your distributor or our website for the applicable Specification Sheet, Accessories Guide, and other literature referred to in this manual.

To The Installer

Before installing this unit, please read this manual to familiarize yourself on the specific items which must be adhered to, including maximum external static pressure to unit, air temperature rise, minimum or maximum CFM and motor speed connections.

Keep this literature in a safe place for future reference.

CAUTION

SHEET METAL PARTS, SCREWS, CLIPS, AND SIMILAR ITEMS INHERENTLY HAVE SHARP EDGES, AND IT IS NECESSARY THAT THE INSTALLER AND SERVICE PERSONNEL EXERCISE CAUTION.

WARNING

DO NOT CONNECT TO OR USE ANY DEVICE THAT IS NOT LISTED IN THE APPLICABLE PRODUCT SPECIFICATIONS AS ACCEPTABLE FOR USE WITH THIS UNIT. SERIOUS PROPERTY DAMAGE, PERSONAL INJURY, REDUCED UNIT PERFORMANCE AND/OR HAZARDOUS CONDITIONS MAY RESULT FROM THE USE OF SUCH NON-APPROVED DEVICES.

WARNING

TO AVOID PROPERTY DAMAGE, PERSONAL INJURY OR DEATH, DO NOT USE THIS UNIT IF ANY PART HAS BEEN UNDER WATER. IMMEDIATELY CALL A QUALIFIED SERVICE TECHNICIAN TO INSPECT THE UNIT AND TO REPLACE ANY PART OF THE CONTROL SYSTEM AND ANY GAS CONTROL HAVING BEEN UNDER WATER.

WARNING

THIS UNIT MUST NOT BE USED AS A "CONSTRUCTION HEATER" DURING THE FINISHING PHASES OF CONSTRUCTION ON A NEW STRUCTURE. THIS TYPE OF USE MAY RESULT IN PREMATURE FAILURE OF THE UNIT DUE TO EXTREMELY LOW RETURN AIR TEMPERATURE AND EXPOSURE TO CORROSIVE OR VERY DIRTY ATMOSPHERES.

WARNING

HIGH VOLTAGE

DISCONNECT ALL POWER BEFORE SERVICING OR INSTALLING THIS UNIT. MULTIPLE POWER SOURCES MAY BE PRESENT. FAILURE TO DO SO MAY CAUSE PROPERTY DAMAGE, PERSONAL INJURY OR DEATH.

WARNING

TO PREVENT THE RISK OF PROPERTY DAMAGE, PERSONAL INJURY, OR DEATH, DO NOT STORE COMBUSTIBLE MATERIALS OR USE GASOLINE OR OTHER FLAMMABLE LIQUIDS OR VAPORS IN THE VICINITY OF THIS APPLIANCE.

WARNING

DO NOT USE MEANS TO ACCELERATE DEFROSTING PROCESS OR TO CLEAN, OTHER THAN THOSE RECOMMENDED BY THE MANUFACTURER.

THE APPLIANCE SHALL BE STORED IN A ROOM WITHOUT CONTINUOUSLY OPERATING IGNITION SOURCES (FOR EXAMPLE: OPEN FLAMES, AN OPERATING GAS APPLIANCE OR AN OPERATING ELECTRIC HEATER.)

DO NOT PIERCE OR BURN.

BE AWARE THAT REFRIGERANTS MAY NOT CONTAIN AN ODOR.

WARNING

ONLY AUXILIARY DEVICES APPROVED BY THE APPLIANCE MANUFACTURER OR DECLARED SUITABLE WITH THE REFRIGERANT SHALL BE INSTALLED IN CONNECTING DUCTWORK.

WARNING

AUXILIARY DEVICES WHICH MAY BE A POTENTIAL IGNITION SOURCE SHALL NOT BE INSTALLED IN THE DUCT WORK. EXAMPLES OF SUCH POTENTIAL IGNITION SOURCES ARE HOT SURFACES WITH A TEMPERATURE EXCEEDING 700°C AND ELECTRIC SWITCHING DEVICES.

WARNING

LEAK DETECTION SYSTEM INSTALLED. UNIT MUST BE POWERED EXCEPT FOR SERVICE.

WARNING

THIS UNIT IS EQUIPPED WITH ELECTRICALLY POWERED SAFETY MEASURES. TO BE EFFECTIVE, THE UNIT MUST BE ELECTRICALLY POWERED AT ALL TIMES AFTER INSTALLATION, OTHER THAN WHEN SERVICING.

WARNING

DO NOT OPERATE THE COMPRESSOR(S) WITHOUT THE TERMINAL PLUG FULLY ENGAGED OR THE TERMINAL COVER PROPERLY INSTALLED.

WARNING

A TRIPPED CIRCUIT BREAKER OR BLOWN FUSE MAY INDICATE THAT AN ELECTRICAL PROBLEM EXISTS. DO NOT RESET A CIRCUIT BREAKER OR REPLACE FUSES WITHOUT FIRST PERFORMING THOROUGH ELECTRICAL TROUBLESHOOTING AND TESTING PROCEDURES.

WARNING

HIGH VOLTAGE - PRIOR TO SERVICING THE UNIT OR REMOVING THE COMPRESSOR TERMINAL PLUG OR TERMINAL COVER, DISCONNECT ALL ELECTRICAL POWER FROM THE UNIT. MULTIPLE POWER SOURCES MAY BE PRESENT.

WARNING

HERMETIC COMPRESSOR ELECTRICAL TERMINAL VENTING CAN BE DANGEROUS. IN CERTAIN CIRCUMSTANCES, THE TERMINAL MAY BE EXPELLED, VENTING THE REFRIGERANT VAPOR AND COMPRESSOR OIL CONTAINED WITHIN THE COMPRESSOR HOUSING AND SYSTEM. BE ALERT FOR SOUNDS OF ARCING (SIZZLING, SPUTTERING, OR POPPING) INSIDE THE COMPRESSOR. IMMEDIATELY GET AWAY IF YOU HEAR THESE SOUNDS AND DISCONNECT ELECTRICAL POWER FROM THE UNIT.

GENERAL INFORMATION

WARNING

TO PREVENT PROPERTY DAMAGE, PERSONAL INJURY OR DEATH, DUE TO FIRE, EXPLOSIONS, SMOKE, SOOT, CONDENSATION, ELECTRIC SHOCK OR CARBON MONOXIDE, THIS UNIT MUST BE PROPERLY INSTALLED, REPAIRED, OPERATED, AND MAINTAINED.

This unit is approved for outdoor installation ONLY. Rated performance is achieved after 20 hours of operation. Rated performance is delivered at the specified airflow. See product specification sheet for light commercial models. Specification sheets can be found at **www.daikinac.com** for Daikin brand products. Within the website, please select the commercial products menu and then select the submenu for the type of product to be installed, such as air conditioners or heat pumps, to access a list of product pages that each contain links to that model's specification sheet.

To assure that your unit operates safely and efficiently, it must be installed, operated, and maintained in accordance with these installation and operating instructions, all local building codes and ordinances.

QUALIFICATIONS OF WORKERS

Personnel must be certified to service, work, and/or repair units with flammable refrigerants. A certificate should document the competence and qualification achieved through training that included the substance of the following:

- Information about the explosion potential of FLAMMABLE REFRIGERANTS to show that flammables may be dangerous when handled without care.

- Information about POTENTIAL IGNITION SOURCES, especially those that are not obvious, such as lighters, light switches, vacuum cleaners, electric heaters.
- Information about the different safety concepts, including ventilated and unventilated areas.
- Information about refrigerant detectors, including function, operation, and service measures.
- Information about the concept of sealed components and sealed enclosures according to IEC 60079-15:2010.
- Information about the correct working procedures, including commissioning, maintenance, repair, decommissioning, and disposal procedures.

EPA REGULATIONS

Important: The United States Environmental Protection Agency (EPA) has issued various regulations regarding the introduction and disposal of refrigerants in this unit. Failure to follow these regulations may harm the environment and can lead to the imposition of substantial fines. Because regulations may vary due to passage of new laws, we suggest a certified technician perform any work done on this unit. Should you have any questions please contact the local office of the EPA.

NATIONAL CODES

This product is designed and manufactured to permit installation in accordance with National Codes. It is the installer's responsibility to install the product in accordance with National Codes and/or prevailing local codes and regulations.

The heating and cooling capacities of the unit should be greater than or equal to the design heating and cooling loads of the area to be conditioned. The loads should be calculated by an approved method or in accordance with ASHRAE Guide or Manual J - Load Calculations published by the Air Conditioning Contractors of America.

Obtain from:

American National Standards Institute

www.ansi.org

System design and installation should also, where applicable, follow information presented in accepted industry guides such as the ASHRAE Handbooks. The manufacturer assumes no responsibility for equipment installed in violation of any code or regulation. The mechanical installation of the packaged roof top units consists of making final connections between the unit and building services; supply and return duct connections; and drain connections (if required). The internal systems of the unit are completely factory-installed and tested prior to shipment.

Units are generally installed on a steel roof mounting curb assembly which has been shipped to the job site for installation on the roof structure prior to the arrival of the unit. The model number shown on the unit's identification plate identifies the various components of the unit such as refrigeration tonnage, heating input and voltage.

Carefully inspect the unit for damage including damage to the cabinetry. Any bolts or screws which may have loosened in transit must be re-tightened. In the event of damage, the receiver should:

1. Make notation on delivery receipt of any visible damage to shipment or container.
2. Notify the carrier promptly and request an inspection.
3. In case of concealed damage, the carrier should be notified as soon as possible-preferably within 5 days.
4. File the claim with the following supporting documents:
   a. Original Bill of Lading, certified copy, or indemnity bond.
   b. Original paid freight bill or indemnity in lieu thereof.
   c. Original invoice or certified copy thereof, showing trade and other discounts or reductions.
   d. Copy of the inspection report issued by the carrier representative at the time damage is reported to the carrier. The carrier is responsible for making prompt inspection of damage and for a thorough investigation of each claim. The distributor or manufacturer will not accept claims from dealers for transportation damage.

NOTE: When inspecting the unit for transportation damage, remove all packaging materials. Recycle or dispose of the packaging material according to local codes.

Pre-Installation Checks

Carefully read all instructions for the installation prior to installing unit. Ensure each step or procedure is understood and any special considerations are taken into account before starting installation. Assemble all tools, hardware and supplies needed to complete the installation. Some items may need to be purchased locally.

Terminal Venting

Never operate the compressor without the terminal cover secured and properly in place or without the electrical plug fully seated and engaged to the terminal posts.
If a terminal is damaged, electrically overloaded, or short circuits to ground, there is a remote possibility that the terminal can be suddenly expelled from the terminal housing thereby venting the refrigerant and compressor oil mixture to atmosphere. This discharge can be ignited from electrical arcing, or other open sources of ignition, and can cause potentially severe or fatal injury. This event is known as "Terminal Venting".
To reduce the possibility of external ignition, all open flames or other heat sources must be extinguished, and all electrical power must be turned off and lock and tagged out prior to opening the terminal cover or removing the electrical plug and servicing the system. Proper sealed system evacuation is required during equipment service to maintain

adequate internal system cleanliness while eliminating contaminates.
Be alert for sounds of arcing (sizzling, sputtering, or popping) inside the compressor. IMMEDIATELY GET AWAY from the unit if you hear these sounds and disconnect electrical power.

Wiring

Check that wiring will not be subject to wear, corrosion, excessive pressure, vibration, sharp edges or any other adverse environmental effects. The check shall also take into account the effects of aging or continual vibration from sources such as compressors or fans.

Detection of Flammable Refrigerants

Under no circumstances shall potential sources of ignition be used in the searching for or detection of refrigerant leaks. A halide torch (or any other detector using a naked flame) shall not be used.

The following leak detection methods are deemed acceptable for all refrigerant systems.

Electronic leak detectors may be used to detect refrigerant leaks but, in the case of FLAMMABLE REFRIGERANTS, the sensitivity may not be adequate, or may need re-calibration. (Detection equipment shall be calibrated in a refrigerant-free area.) Ensure that the detector is not a potential source of ignition and is suitable for the refrigerant used. Leak detection equipment shall be set at a percentage of the LFL of the refrigerant and shall be calibrated to the refrigerant employed, and the appropriate percentage of gas (25 % maximum) is confirmed.

Leak detection fluids are also suitable for use with most refrigerants but the use of detergents containing chlorine shall be avoided as the chlorine may react with the refrigerant and corrode the copper pipe-work.

If a leak is suspected, all naked flames shall be removed/extinguished.

If a leakage of refrigerant is found which requires brazing, all of the refrigerant shall be recovered from the system.

NOTE:THIS UNIT SHOULD BE INSTALLED IN A MANNER SO THAT IT IS NOT ACCESSIBLE TO THE PUBLIC.

NOTE: UNITS MAY BE INSTALLED IN HEAVY SNOW CLIMATES. ENSURE NO SNOW OBSTRUCTS OR COVERS THE UNIT, AS IT MAY AFFECT PERFORMANCE. REGULARLY CHECK FOR SNOW BUILDUP.

UNIT LOCATION

WARNING

The appliance shall be installed, operated and stored in a room with a floor area not less than the minimum room area.

$\geq 15.3\ m^2$
$164.7\ ft^2$

IMPORTANT: Refer to the altitude adjusted room area calculation referenced later in this manual.

WARNING

To prevent possible equipment damage, property damage, personal injury or death, the following bullet points must be observed when installing the unit.

IMPORTANT NOTE: Remove wood shipping rails and metal shipping brace prior to installation of the unit on a roof curb.

All Installations:

IMPORTANT NOTE: ***Unit with crankcase heater should be energized 24 hours prior to compressor start up to ensure crankcase heater has sufficiently warmed the compressors. Compressor damage may occur is this step is not followed.***

NOTE: Appliance is shipped from factory for vertical duct application.

Proper installation of the unit ensures trouble-free operation. Improper installation can result in problems ranging from noisy operation to property or equipment damages, dangerous conditions that could result in injury or personal property damage. Give this booklet to the user and explain it's provisions. The user should retain these instructions for future reference.

- For proper operation and condensate drainage, the unit must be mounted level.
- Do not locate the unit in an area where the outdoor air will be frequently contaminated by compounds containing chlorine or fluorine. Common sources of such compounds include swimming pool chemicals and chlorine bleaches, paint stripper, adhesives, paints, varnishes, sealers, waxes (which are not yet dried) and solvents used during construction and remodeling. Various commercial and industrial processes may also be sources of chlorine/fluorine compounds.
- To avoid possible illness or death of the building occupants, do NOT locate outside air intake device

(economizer, manual fresh air intake, motorized fresh air intake) too close to an exhaust outlet, gas vent termination, or plumbing vent outlet. For specific distances required, consult local codes.

- Allow minimum clearances from the enclosure for fire protection, proper operation, and service access (see Unit Clearances). These clearances must be permanently maintained.
- When the unit is heating, the temperature of the return air entering the unit must be a minimum of 55°F.

Ground Level Installations Only:

- When the unit is installed on the ground adjacent to the building, a level concrete (or equal) base is recommended. Prepare a base that is 3” larger than the package unit footprint and a minimum of 3” thick.
- The base should also be located where no runoff of water from higher ground can collect in the unit.

Roof top Installations Only:

- To avoid possible property damage or personal injury, the roof must have sufficient structural strength to carry the weight of the unit(s) and snow or water loads as required by local codes. Consult a structural engineer to determine the weight capabilities of the roof.
- The unit may be installed directly on wood floors or on Class A, Class B, or Class C roof covering material.
- To avoid possible personal injury, a safe, flat surface for service personnel should be provided.
- Adequate clearances from the unit to any adjacent public walkways, adjacent buildings, building openings or openable windows must be maintained in accordance with National Codes.

Unit Precautions

- Do not stand or walk on the unit.
- Do not drill holes anywhere in panels or in the base frame of the unit (except where indicated). Unit access panels provide structural support.
- Do not remove any access panels until unit has been installed on roof curb or field supplied structure.
- Do not roll unit across finished roof without prior approval of owner or architect.
- Do not skid or slide on any surface as this may damage unit base. The unit must be stored on a flat, level surface. Protect the condenser coil because it is easily damaged.

Roof Curb Installations Only:

Curb installations must comply with local codes and should be done in accordance with the established guidelines of the National Roofing Contractors Association.

Proper unit installation requires that the roof curb be firmly and permanently attached to the roof structure. Check for adequate fastening method prior to setting the unit on the curb.

Full perimeter roof curbs are available from the factory and are shipped unassembled. Field assembly, squaring, leveling and mounting on the roof structure are the responsibility of the installing contractor. All required hardware necessary for the assembly of the sheet metal curb is included in the curb accessory.

- Sufficient structural support must be determined prior to locating and mounting the curb and package unit.
- Ductwork must be constructed using industry guidelines. The duct work must be placed into the roof curb before mounting the package unit. Our full perimeter curbs include duct connection frames to be assembled with the curb. Cantilevered type curbs are not available from the factory.
- Curb insulation, cant strips, flashing and general roofing material are furnished by the contractor.

The curbs must be supported on parallel sides by roof members. The roof members must not penetrate supply and return duct opening areas as damage to the unit might occur.

NOTE: The unit and curb accessories are designed to allow vertical duct installation before unit placement. Duct installation after unit placement is not recommended.

CAUTION

All curbs look similar. To avoid incorrect curb position, check job plans carefully and verify markings on curb assembly. Instructions may vary in curb styles and supersedes information shown.

See the manual shipped with the roof curb for assembly and installation instructions.

CLEARANCES

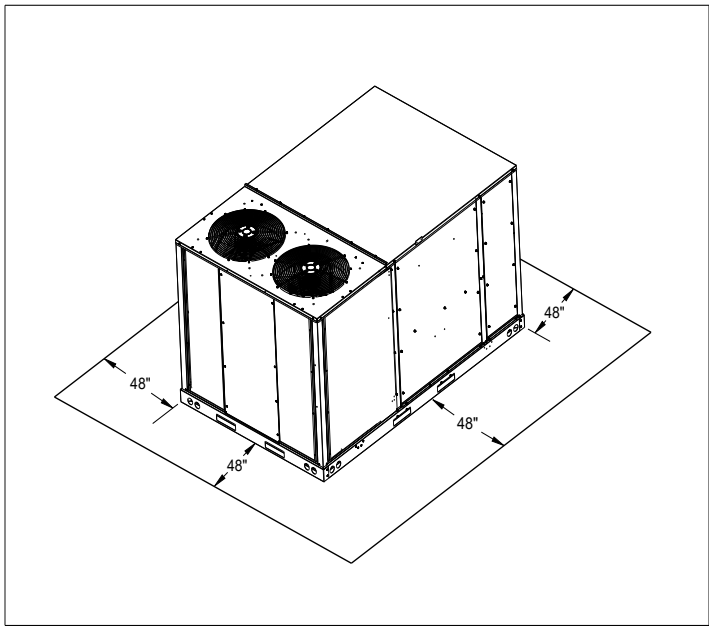

UNIT CLEARANCES

*In situations that have multiple units, a 48" minimum clearance is required between the condenser coils.

Adequate clearance around the unit should be kept for safety, service, maintenance, and proper unit operation. A clearance of at least 60" is required on duct panels side to allow evaporator coil and condensate pan removal. A clearance of 48" is recommended on all other sides of the unit to service access and to insure proper ventilation and condenser airflow. The unit must not be installed beneath any obstruction. The unit should be installed remote from all building exhausts to inhibit ingestion of exhaust air into the unit fresh air intake.

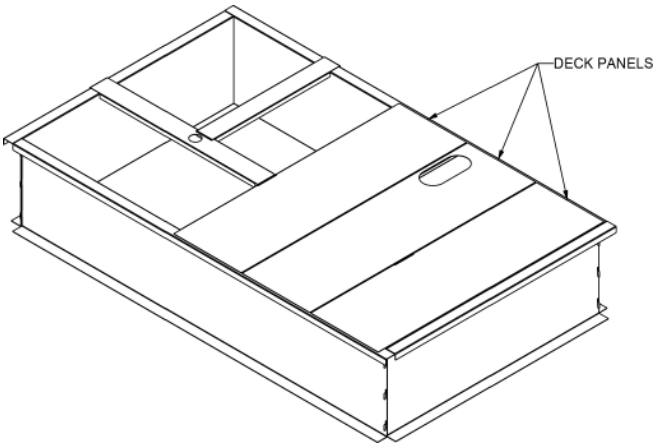

Roof Cub Installation

ROOF CURB POST-INSTALLATION CHECKS

After installation, check the top of the curb, duct connection frame and duct flanges to make sure gasket has been applied properly. Gasket should be firmly applied to the top of the curb perimeter, duct flanges and any exposed duct connection frame. If gasket is loose, re-apply using strong weather resistant adhesive.

NOTE: Do not stretch gasket to make it fit.

Protrusion

Inspect curb to ensure that none of the utility services (electric) routed through the curb protrude above the curb.

CAUTION

If protrusions exist, do not attempt to set unit on curb.

ROOF TOP DUCT CONNECTIONS

Install all duct connections on the unit before placing the unit on rooftop. If fasteners such as screws are used to secure the duct to the curb these should be installed horizontally into the duct frame of the curb.

Horizontal Discharge

Refer to IOD-7082 included in the literature pack for installing horizontal duct covers.

Flexible duct connectors between the unit and ducts are recommended. Insulate and weatherproof all external ductwork and joints as required and in accordance with local codes.

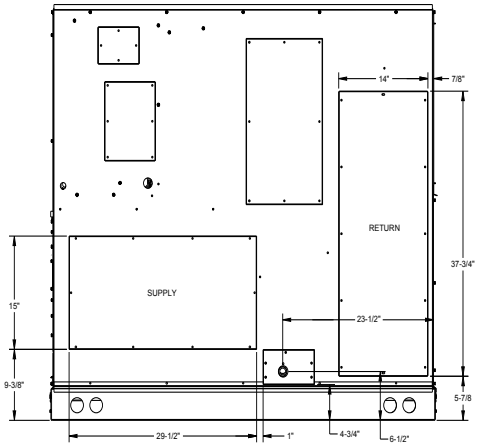

Horizontal Discharge Duct Connections

RIGGING DETAILS

WARNING

To prevent property damage, the unit should remain in an upright position during all rigging and moving operations. To facilitate lifting and moving when a crane is used, place the unit in an adequate cable sling.

WARNING

If units are lifted two at a time, the fork holes on the condenser end of the unit must not be used. Minimum fork length is 48" to prevent damage to the unit; however, 72" is recommended.

Provisions for forks have been included in the unit base frame. No other fork locations are approved.

WARNING

To prevent possible equipment damage, property damage, personal injury or death, the following bullet points must be observed when installing the unit.

- Unit must be lifted by the four lifting holes located at the base frame corners.
- Lifting cables should be attached to the unit with shackles.
- The distance between the crane hook and the top of the unit must not be less than 60”.

- Two spreader bars must span over the unit to prevent damage to the cabinet by the lift cables. Spreader bars must be of sufficient length so that cables do not come in contact with the unit during transport. Remove wood struts mounted beneath unit base frame before setting unit on roof curb. These struts are intended to protect unit base frame from fork lift damage. Removal is accomplished by extracting the sheet metal retainers and pulling the struts through the base of the unit. Refer to rigging label on the unit.
- The unit is equipped with a steel shipping brace located underneath the unit (under compressors). The brace **MUST** be removed before installing the unit on a roof curb. Follow the following instruction for removal.

CAUTION

WHEN THE UNIT IS SUSPENDED, THE BOARDS AND THE SHIPPING BRACE WILL DROP WHEN THE SCREWS ARE REMOVED. TO PREVENT PERSONAL INJURY, STAND CLEAR. REMOVE FORK HOLE BRACKETS, BOARDS, AND SHIPPING BRACE FROM BOTTOM OF UNIT BEFORE PLACING UNIT ONTO THE CURB.

Before installing this unit on a roof curb:

1. **Remove wooden struts per installation instructions. These are the struts that are located in the fork holes and are used to protect the unit from damage while lifting with forks.**
2. **Locate and remove the four (4) screws that attach the metal shipping brace to the side rails. There will be two (2) screws on each side of the unit. See following figure.**

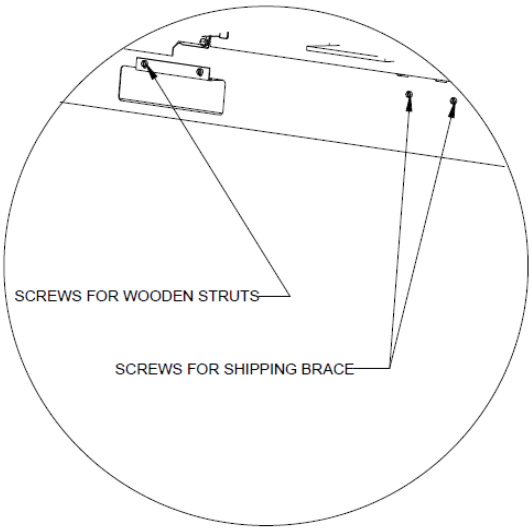

Important: If using bottom discharge with roof curb, ductwork should be attached to the curb prior to installing the unit. Ductwork dimensions are shown in Roof Curb Installation Instructions.

Refer to the Roof Curb Installation Instructions for proper curb installation. Curbing must be installed in compliance with the National Roofing Contractors Association Manual.

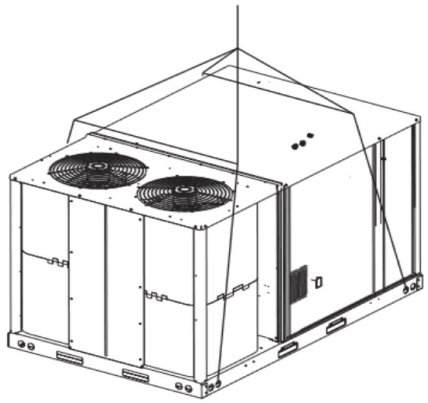

To assist in determining rigging requirements, unit weights and center of gravity are shown as follows.

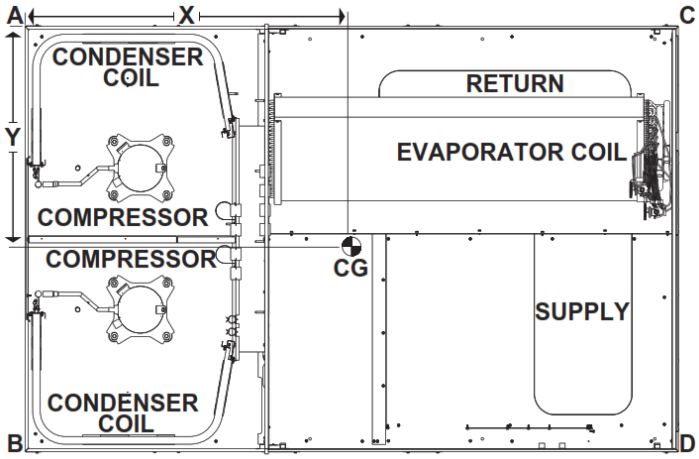

WEIGHTS AND CENTER OF GRAVITY

Note: Units should be lifted at a point above center of gravity.

DHC WEIGHTS (lbs)				
Data	7.5T	8.5T	10T	12.5T
Corner weight- A	222	298	268	281
Corner weight- B	376	307	355	343
Corner weight- C	328	264	295	311
Corner weight- D	229	307	277	283
Unit operating weight	1155	1176	1195	1218
Unit shipping weight	1215	1234	1252	1277
X Center (inches)	44.8	45.1	44.5	45
Y Center (inches)	28.3	28.3	28.1	28.3

CAUTION

TO PREVENT DAMAGE TO THE WIRING, PROTECT WIRING FROM SHARP EDGES. FOLLOW NATIONAL ELECTRICAL CODE AND ALL LOCAL CODES AND ORDINANCES. DO NOT ROUTE WIRES THROUGH REMOVABLE ACCESS PANELS.

CAUTION

TO PREVENT SEVERE DAMAGE TO THE BOTTOM OF THE UNIT, DO NOT FORK LIFT UNIT AFTER WOOD STRUTS HAVE BEEN REMOVED.

Bring condenser end of unit into alignment with the curb first. Lower unit carefully onto roof mounting curb. When a rectangular cantilever curb is used, care should be taken to center the unit. Check for proper alignment and orientation of supply and return openings with duct.

Rigging Removal

CAUTION

To prevent damage to the unit, do not allow crane hooks and spreader bars to rest on the roof of the unit.

Remove spreader bars, lifting cables and other rigging equipment.

ELECTRICAL WIRING

WARNING

HIGH VOLTAGE

Disconnect all power and lock out / tag out before servicing or installing this unit. Multiple power sources may be present. Failure to do so may cause property damage, personal injury or death.

WARNING

HIGH VOLTAGE

To avoid personal injury or death due to electrical shock, do not tamper with factory wiring. The internal power and control wiring of these units are factory-installed and have been thoroughly tested prior to shipment. Contact your local representative if assistance is required.

CAUTION

Conduit and fittings must be weather-tight to prevent water entry into the building.

For unit protection, use a fuse or hacr circuit breaker that is in excess of the circuit ampacity, but less than or equal to the maximum overcurrent protection device. DO NOT EXCEED THE MAXIMUM OVERCURRENT DEVICE SIZE SHOWN ON UNIT DATA PLATE.

All line voltage connections must be made through weatherproof fittings. All exterior power supply and ground wiring must be in approved weatherproof conduit.

The main power supply wiring to the unit and low voltage wiring to accessory controls must be done in accordance with these instructions, the latest edition of the National Electrical Code (ANSI/NFPA 70), and all local codes and ordinances.

The unit is factory wired for the voltage shown on the unit's data plate. Refer to model nomenclature in Appendix B for voltage requirement for your unit.

NOTE: If supply voltage is 208V, lead on primary of transformer(s) must be moved from the 240V to the 208V tap. Refer to wiring diagram on unit for details.

Main power wiring should be sized for the minimum circuit ampacity shown on the unit's data plate. Size wires in accordance with the ampacity tables in Article 310 of the National Electrical Code. If long wires are required, it may be necessary to increase the wire size to prevent excessive voltage drop. Wires should be sized for a maximum of 3% voltage drop.

CAUTION

To avoid risk of property damage, personal injury or fire, use only copper conductors.

CAUTION

Label all wires prior to disconnection when servicing controls. Wiring errors can cause improper and dangerous operation. Verify proper operation after servicing.

NOTE: A weather-tight disconnect switch, properly sized for the unit total load, must be field or factory installed. An external field supplied disconnect may be mounted on the exterior panel.

Ensure the data plate is not covered by the field-supplied disconnect switch.

- Some disconnect switches are not fused. Protect the power leads at the point of distribution in accordance with the unit's data plate.
- The unit must be electrically grounded in accordance with local codes or, in the absence of local codes, with the latest edition of the National Electrical Code (ANSI-NFPA 70). A ground lug is provided for this purpose. Do not use the ground lug for connecting a neutral conductor.
- Connect power wiring to the electrical power block located within the main control box.

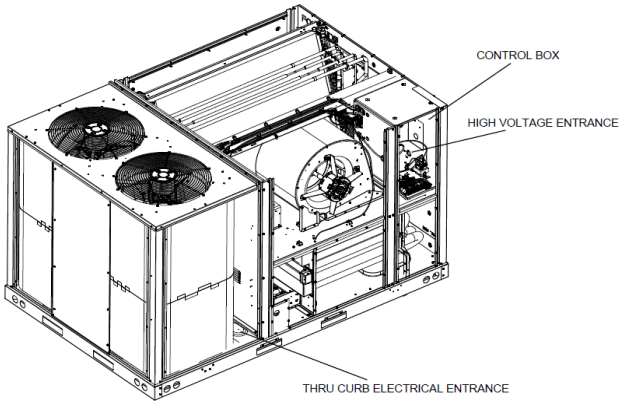

AC Unit

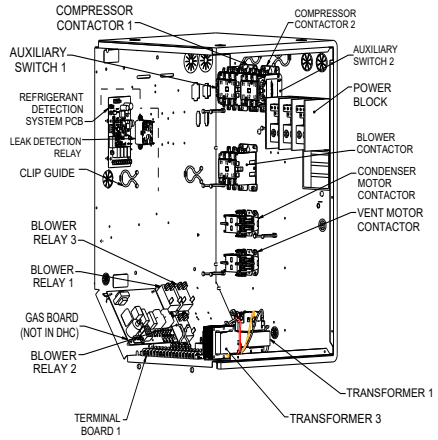

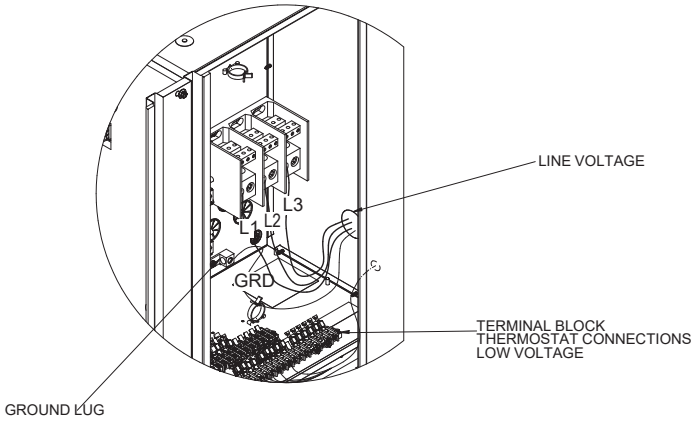

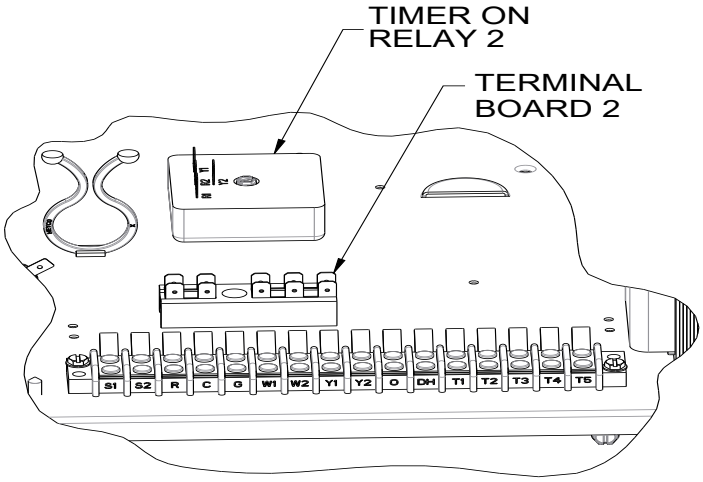

Thermostat Control Box

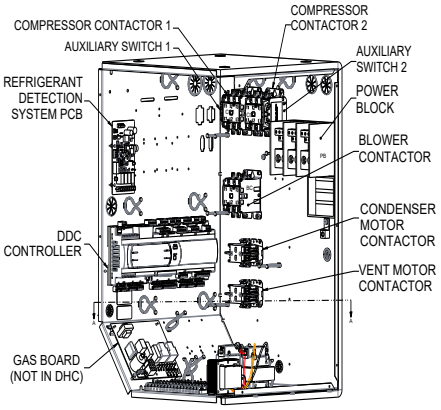

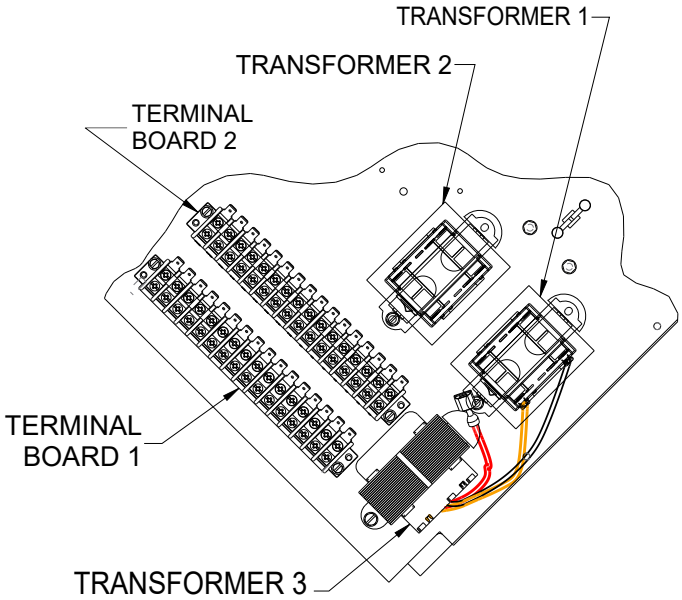

DDC Control Box

NOTE: Depending on the options installed, the location of the components may vary in some models.

WARNING

Failure of unit due to operation on improper line voltage or with excessive phase unbalance constitutes product abuse and is not covered by the warranty. It may cause severe damage to the unit's electrical components.

Areas Without Convenience Outlet

It is recommended that an independent 115V power source be brought to the vicinity of the roof top unit for portable lights and tools used by the service mechanic.

NOTE: Refer to local codes for requirements. These outlets can also be factory installed.

Units installed on Roof Tops

Main power and low voltage wiring may enter the unit through the condenser end or through the roof curb. Install conduit connectors at the designated entrance locations. External connectors must be weatherproof. All holes in the unit base must be sealed (including those around conduit nuts) to prevent water leakage into building. All required conduit and fittings are to be field supplied.

Supply voltage to roof top unit must not vary by more than 10% of the value indicated on the unit's data plate. Phase voltage unbalance must not exceed 2%. Contact your local power company for correction of improper voltage or phase unbalance.

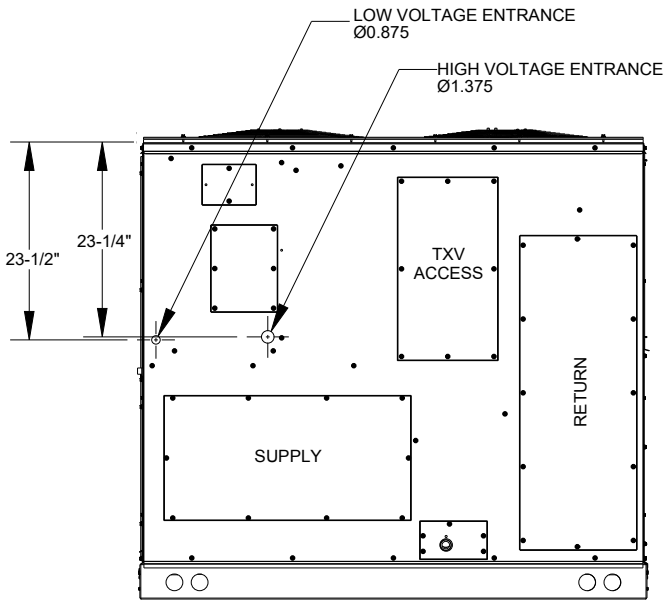

Duct Panel

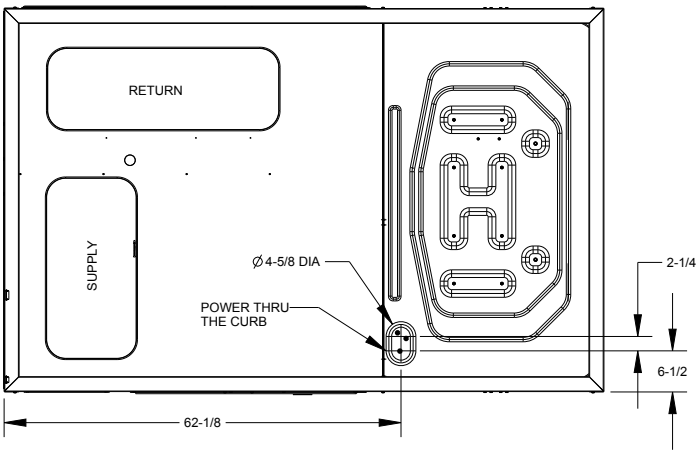

Electrical Entrance and Thru Curb
(Bottom View of Unit)

Through the Base Pan Electrical Connection
kit part number: TTBCKHE02

Low Voltage Control Wiring

1. A 24V thermostat must be installed for unit operation unless the unit is equipped with factory installed DDC control. Refer to DDC Quick Start Guide.
2. Locate thermostat or remote sensor in the conditioned space where it will sense average temperature. Do not locate the device where it may be directly exposed to supply air, sunlight or other sources of heat. Follow installation instructions packaged with the thermostat.
3. Use #18 AWG wire for 24V control wiring runs not exceeding 75 feet. Use #16 AWG wire for 24V control wiring runs not exceeding 125 feet. Use #14 AWG wire for 24V control wiring runs not exceeding 200 feet. Low voltage wiring may be National Electrical Code (NEC) Class 2 where permitted by local codes.
4. Route thermostat wires from sub-base terminals to the unit. Control wiring should enter through the duct panel opening or through curb indicated in "Electrical Entrance" figure. Connect thermostat and any accessory wiring to low voltage terminal block TB1 in the main control box.
5. The hole on the duct panel that control wires enter through must be sealed to prevent water leakage into the unit.

NOTE: Field-supplied conduit may need to be installed depending on unit/curb configuration. Use #18 AWG solid conductor wire whenever connecting thermostat wires to terminals on sub-base. DO NOT use larger than #18 AWG wire. A transition to #18 AWG wire may be required before entering thermostat sub-base.

NOTE: Refer to unit wiring diagrams for thermostat hookups.

CIRCULATING AIR AND FILTERS

Ductwork

The supply duct from the unit through a wall may be installed without clearance. However, minimum unit clearances must be maintained (see “Clearances” section). The supply duct should be provided with an access panel large enough to inspect the air chamber downstream of the heat exchanger. A cover should be tightly attached to prevent air leaks. False ceilings or drop ceilings may be used as a return air plenum. Note: adequate return grills have to be supplied for each room for proper return for that space.

Ductwork dimensions are shown in the roof curb installation manual.

If desired, supply and return duct connections to the unit may be made with flexible connections to reduce possible unit operating sound transmission.

CONDENSATE DRAIN CONNECTION

Condensate Drain Connection

A 3/4” female NPT drain connection is supplied on the end of the unit and bottom of the drain pan for condensate piping. An external trap must be installed for proper condensate drainage. Use hand tight torque to attach drain fitting to the drain connection.

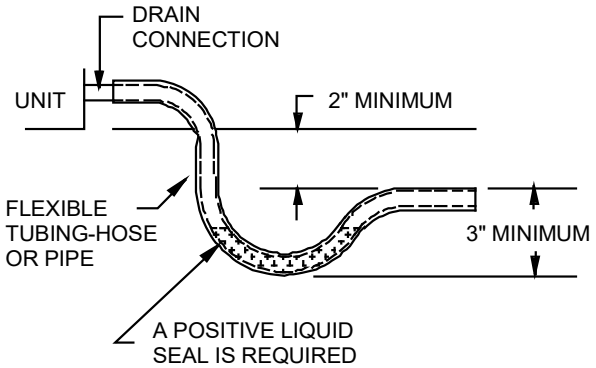

Drain Connection

Install condensate drain trap as shown. Use 3/4” drain line and fittings or larger. Do not operate without trap.

Horizontal Drain

Drainage of condensate directly onto the roof may be acceptable; refer to local code. It is recommended that a small drip pad of either stone, mortar, wood or metal be provided to prevent any possible damage to the roof.

Vertical Drain

To use the bottom drain connection, remove the drain plug from the bottom connection and install it in the horizontal connection.

Cleaning

Due to the fact that drain pans in any air conditioning unit will have some moisture in them, algae and fungus will grow due to airborne bacteria and spores. Periodic cleaning is necessary to prevent this build-up from plugging the drain.

To remove the drain pan for cleaning, remove the drain pan cover first, then slide out the drain pan.

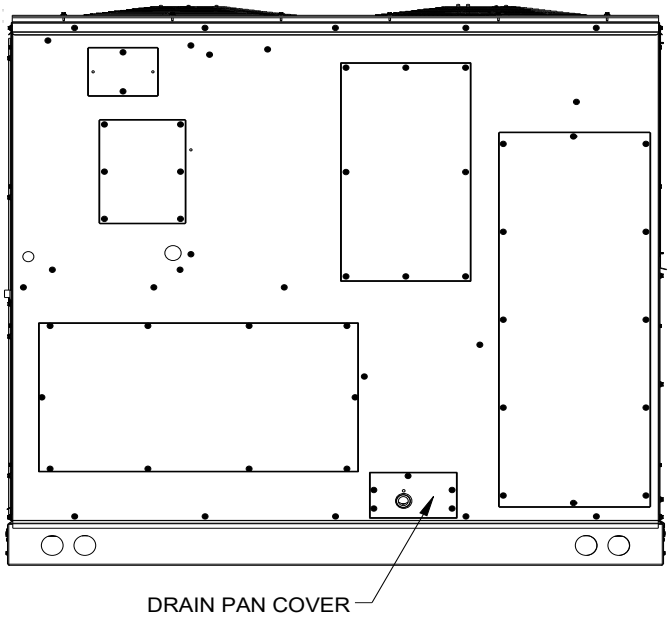

STARTUP, ADJUSTMENTS, AND CHECKS

WARNING

HIGH VOLTAGE

To avoid personal injury or death due to electrical shock, bond the frame of the unit to the building electrical ground by use of the grounding terminal provided or other acceptable means. Disconnect all power and lock out / tag out before servicing or installing this unit.

CAUTION

To prevent property damage or personal injury, do not start the unit until all necessary pre-checks and tests have been performed.

WARNING

MOVING MACHINERY HAZARD!

To prevent possible personal injury or death, disconnect power to the unit and padlock in the "OFF" position before servicing fans.

Pre-Startup Instructions

On new installations, or if a major component has been replaced, the operation of the unit must be checked.

Check unit operation as outlined in the following instructions. If any sparking, odors, or unusual sounds are encountered, shut off electrical power and recheck for wiring errors, or obstructions in or near the blower motors. **Duct covers must be removed before operating unit in horizontal application.**

The Startup, Adjustments, and Checks procedure provides a step-by-step sequence which, if followed, will assure the proper startup of the equipment in the minimum amount of time. Air balancing of duct system is not considered part of this procedure. However, it is an important phase of any air conditioning system startup and should be performed upon completion of the Startup, Adjustments, and Checks procedure. The Startup, Adjustments, and Checks procedure at outside ambients below 55°F should be limited to a readiness check of the refrigeration system with the required final check and calibration left to be completed when the outside ambient rises above 55°F.

Temporary Heating Or Cooling

If the unit is to be used for temporary heating or cooling, a “Startup, Adjustments, and Checks” must first be performed in accordance with this manual. Damage or repairs due to failure to comply with these requirements are not covered under the warranty. **After** the machines are used for temporary heating or cooling, inspect the coils, fans, and motors for unacceptable levels of construction dust and dirt and install new filters.

Contractor Responsibility

The installing contractor must be certain that:

- All supply and return air ductwork is in place, properly sealed, and corresponds with installation instructions.
- All thermostats and sensors are mounted and wired in accordance with installation instructions.
- All electric power connections and the condensate drain installation have been made to each unit on the job. These main supply lines must be functional and capable of operating all units simultaneously.
- All filters are in place.

Roof Curb Installation Check

Inspect the roof curb for correct installation. The unit and curb assembly should be level. Inspect the flashing of the roof mounting curb to the roof, especially at the corners, for good workmanship. Also check for leaks around gaskets. Note any deficiencies in a separate report and forward to the contractor.

Obstructions, Fan Clearance and Wiring

Remove any extraneous construction and shipping materials that may be found during this procedure. Rotate all fans manually to check for proper clearances and that they rotate freely. Check for bolts and screws that may have jarred loose during shipment to the job site. Re-tighten if necessary. Re-tighten all electrical connections.

Field Duct Connections

Verify that all duct connections are tight and that there is no air bypass between supply and return.

Filter Section Check

Remove filter section access panels and check that filters are properly installed. Note airflow arrows on filter frames.

Pre-startup Precautions

It is important to your safety that the unit has been properly grounded during installation. Check ground lug connection in main control box for tightness prior to closing circuit breaker or disconnect switch. Verify that supply voltage on line side of disconnect agrees with voltage on unit identification plate and is within the utilization voltage range as indicated in Appendix B Electrical Data.

System Voltage - That nominal voltage value assigned to a circuit or system for the purpose of designating its voltage class.

Nameplate Voltage - That voltage assigned to a piece of equipment for the purpose of designating its voltage class and for the purpose of defining the minimum and maximum voltage at which the equipment will operate.

Utilization Voltage - The voltage of the line terminals of the equipment at which the equipment must give fully satisfactory performance. Once it is established that supply voltage will be maintained within the utilization range under all system conditions, check and calculate if an unbalanced condition exists between phases. Calculate percent voltage unbalance as follows:

Three Phase Models Only

$$\text{3) PERCENT VOLTAGE UNBALANCE} = 100 \times \frac{\text{2) MAXIMUM VOLTAGE DEVIATIONS FROM AVERAGE VOLTAGE}}{\text{1) AVERAGE VOLTAGE}}$$

HOW TO USE THE FORMULA:
EXAMPLE: With voltage of 220, 216, and 213
1) Average Voltage = 220+216+213=649 / 3 = 216
2) Maximum Voltage Deviations from Average Voltage = 220 - 216 = 4

$$\text{3) Percent Voltage Unbalance} = 100 \times \frac{4}{216} = \frac{400}{216} = 1.8\%$$

Percent voltage unbalance MUST NOT exceed 2%.

Air Flow Adjustments

When the final adjustments are complete, the current draw of the motor should be checked and compared to the full load current rating of the motor. The amperage must not exceed the service factor stamped on the motor nameplate. The total airflow must not be less than that required for operation of the electric heaters.

If an economizer is installed, check the unit operating balance with the economizer at full outside air and at minimum outside air.

NOTE: Never run CFM outside of the airflow table in Appendix A, evaporator coil freezing, electric heater trip or poor unit performance is possible.

Blower Speed Selection

The unit has one set of taps for cooling (T1-T5) and a second set of taps for heating (T6-T10). When Heat is called TB1-W1 will also call TB1-DH activating the second set of taps T6-T10. If cooling and heating is called at the same time heating will take priority and T6-T10 will be chosen by default. Taps T1 and T2 are for low cool operation (cooling stage 1) and Taps T3 to T5 are for high cool operation (cooling stage 2). Taps T6 and T7 are for low heat operation (heating stage 1) and taps T8 to T10 are for high heat operation (heating stage 2). Taps are selected by changing the position of the low voltage leads on the terminal block TB1. Refer to Appendix A for blower performance at each speed tap.

Note: If more than one lead is energized simultaneously, the motor will run at the higher numerical speed tap.

Fan speed for G (GR) is fixed at TB1-T1 and cannot be moved.

Low Cool Y1, Yellow (YL) is movable and set to TB1-T1.

Low Heat W1, White (WH) is movable and set to TB1-T6.

High Cool Y2, Purple (PU) is movable and set to TB1-T3.

High Heat W2, Brown (BR) is movable and set to TB1-T8.

These wires can be moved together or separately and placed on any unoccupied terminal.

Note: YL can be moved to tap T3 as long as YL does not share the tap with PU. WH can be moved to tap T7 as long as WH does not share the tap with BR.

If high cool operation is set at Tap T4 or T5, low cool operation must be set at T2.

If high heat operation is set at T9 or T10, low heat operation must be set at T7.

Note: On units with DDC controls installed, air flow adjustments are made through settings in the DDC controller and speed tap adjustments are not required. Refer to the DDC User Manual for details on making airflow adjustments. Individual settings are available for Fan Only, Low Stage Cooling, High Stage Cooling, Low Stage Heating, and High Stage Heating which can be adjusted as needed to meet airflow requirements.

DHC Model Wiring

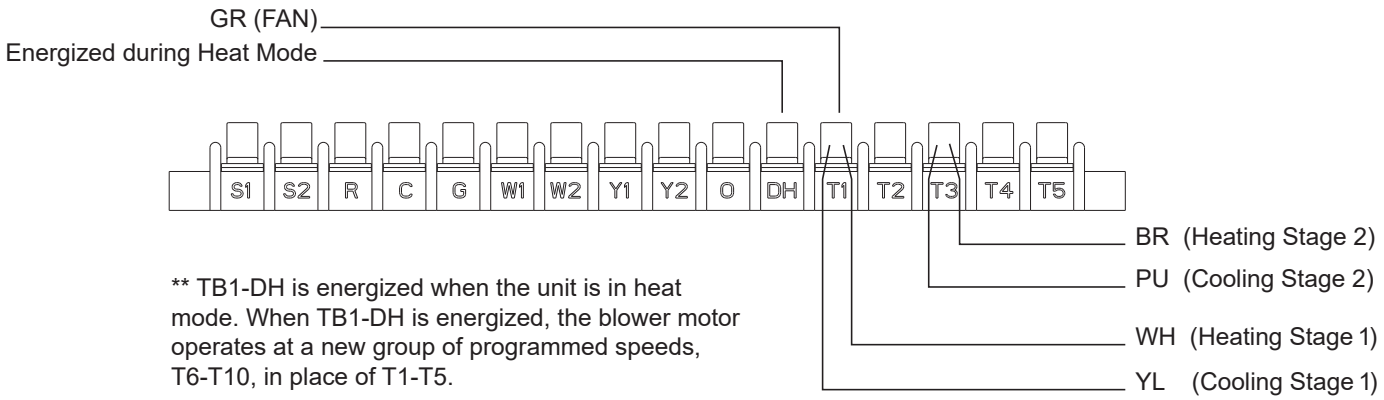

- Move YELLOW (YL) wire from TB1-T1 to T2 to change blower speed during cooling stage 1 operation. (Do not move wires YL and PU to the same taps)
- Move WHITE (WH) wire from TB1-T6 to T7 to change blower speed during heating stage 1 operation. (Do not move wires WH and BR to the same taps)
- Move PURPLE (PU) wire from TB1-T3 to T4 or T5 to change blower speed during cooling stage 2 operation. (Do not move wires YL and PU to the same taps)
- Move BROWN (BR) wire from TB1-T8 to T9 or T10 to change blower speed during heating stage 2 operation. (Do not move wires WH and BR to the same taps)

DSC/DSG OPERATION and WIRE RANGE CHART

DSC/DSG OPERATION							WIRE RANGE									
AC	G	Y1	Y2	W1	W2	DH	T1	T2	T3	T4	T5	T6	T7	T8	T9	T10
Fan Only	X						GR									
Cooling Mode LO	X	X					●→									
Cooling Mode HI	X	X	X						●→	→	→					
Heating Mode Lo	X			X								●→				
Heating Mode HI	X			X	X									●→	→	→

X= 24V Signal

●→ = Range of AVAILABLE TAPS

For wire color information and placement, view DSC/DSG Model Wiring

RDS Function

The mitigation system is a stationary device that detects the presence of R-32 refrigerant above 25% LFL using refrigerant sensors and then initiates mitigation actions. The mitigation system's primary function is to reduce the concentration of leaked R-32 refrigerant to prevent serious safety hazards. The mitigation actions are accomplished by halting HVAC operation and continuing indoor blower operation to provide airflow. Once refrigerant concentration reaches below a safe threshold, the unit will remain in mitigation mode for five minutes to evacuate any remaining R-32 refrigerant within the unit. Upon completion, the unit will resume its normal operation.

RDS Operation

The mitigation system is controlled by a refrigerant sensor(s), which is secured to a designated location(s)for active monitoring. If a leak is detected, HVAC operation is disabled and the indoor blower fan is activated, providing airflow at or above minimum required airflow to evacuate excess concentration. If a Zone Control system is installed in the ductwork attached to this system, the Zone controller must be powered through a Daikin Zoning/Accessory PCB to ensure that the Zoning Dampers open during mitigation mode to provide ventilation throughout all ducting. If the unit is installed with a communicating thermostat, the thermostat will display relevant alerts/information concerning mitigation mode. Once sensors read concentration levels below a safe threshold, a five-minute timer will initiate. Once the time is over, the unit will resume back to its normal operation. If the sensors detect another concentration excess, the unit will go back into mitigation mode and will repeat the same process.

Refrigeration System Checks

Ensure the hold-down bolts on the compressor are secure and have not vibrated loose during shipment. Check that the vibration grommets have been installed and visually check all piping for damage and leaks and repair if necessary. The entire system has been factory charged and tested, making it unnecessary to field charge. Factory refrigerant charge is shown on the unit's nameplate.

To confirm charge levels or, if a leak occurs and charge needs to be added to the system, it is recommended to evacuate the system and recharge refrigerant to the unit's nameplate specifications. This unit has been rated in the cooling mode at the AHRI rated conditions of: indoor (80°F db/67°F wb) and outdoor (95°F db). While operating at this condition, the superheat should range from 9°F to 11°F for each refrigeration circuit measured at the suction service port located near the compressor.

Start-Up Procedure and Checklist

Begin with power turned off at all disconnects.

Air Conditioning Start-Up Procedure

1. Ensure the thermostat is set to OFF and Fan is set to Auto. On units with DDC controls installed, use Test/Balance Menu to force the unit to Off Mode.
2. Inspect all registers and set them to the normal open position.
3. Turn on the electrical supply at the disconnect.
4. Turn the fan switch to the "ON" position. The blower should operate after a 7 second delay. On units with DDC controls installed, use Test/Balance Menu to force the unit to Vent Mode. This test bypasses internal delays.
5. Turn the fan switch to "Auto" position. The blower should stop after a 65 second delay. On units with DDC controls installed, use Test/Balance Menu to force the unit to Off Mode. This test bypasses internal delays.

   a. Supply fan rotation should not be used to identify proper phasing of the unit. For phasing, please refer to step 7 below. If the supply fan is rotating in the wrong direction, please contact your local distributor or tech services for instructions.
6. Set the thermostat to Cool mode and slowly lower the cooling temperature until the unit starts. The compressor, blower and fan should now be operating. Allow the unit to run 10 minutes, make sure cool air is being supplied by the unit. On units with DDC controls installed, use Test/Balance Menu to force the unit to Low Cool Mode or High Cool Mode. This test bypasses internal delays.
7. Check that each compressor is operating correctly. The scroll compressors in these units MUST operate in the proper rotation. To ensure the compressors are operating in the correct direction, check the compressor discharge line pressure or temperature after the compressor is started. The discharge pressure and discharge line temperature should increase. If this does not occur and the compressor is producing an exceptional amount of noise, perform the following checks.

- If a single compressor is operating backwards, check the power wiring for that compressor and correct any leads that have been interchanged at the contactor.
- If both of the compressors are operating backward, disconnect the unit power supply and lock it in the "OFF" position. Switch two leads of the power supply at the unit Single Point Power Block. Reconnect power and check for compressor operation.

8. Turn the temperature setting to the highest position, stopping the unit. The indoor blower will continue to run for 60 seconds. On units with DDC controls installed, use Test/Balance Menu to force the unit to Vent Mode. This test bypasses internal delays.
9. Turn the thermostat system switch to "OFF" and disconnect all power when servicing the unit. On units with DDC controls installed, use Test/Balance Menu to disable Force Mode operation and allow the unit to return to normal operation.

NOTE: The compressor has 180 second re-start delay on timer to avoid short cycling.

WARNING

HIGH VOLTAGE

DISCONNECT ALL POWER BEFORE SERVICING OR INSTALLING THIS UNIT. MULTIPLE POWER SOURCES MAY BE PRESENT. FAILURE TO DO SO MAY CAUSE PROPERTY DAMAGE, PERSONAL INJURY OR DEATH.

Refrigeration Performance Check

Check that compressor RLA corresponds to values shown in Appendix B. RLA draw can be much lower than values listed at low load conditions and low ambient condensing temperatures. Values in Appendix B can slightly exceed at high load conditions and high ambient condensing temperatures.

Checking Subcooling

NOTE: Make sure the air flow is correct before making any adjustments.

Units with a TXV should be charged to Subcooling only.

SUBCOOLING FORMULA = SATURATED LIQUID LINE TEMPERATURE - LIQUID LINE TEMPERATURE

EXAMPLE:

a. Liquid Line Pressure = 417 PSI

b. Corresponding Temp. = 120°F

c. Thermometer on Liquid line = 109°F.

To obtain the amount of subcooling, subtract 109°F from 120°F. The difference is 11° subcooling. The appropriate range for each model is available in the Unit Subcooling and Superheat table.

CHECKING SUPERHEAT

EXAMPLE:

a. Suction Pressure = 143 PSI

b. Corresponding Temp. = 50°F

c. Thermometer on Suction Line = 59°F

To obtain the degrees temperature of superheat, subtract 50.0 from 59.0°F. The difference is 9° Superheat. The 9° Superheat would fall in the ± range of allowable superheat.

SUPERHEAT = SUCTION LINE TEMP - SAT. SUCTION TEMP.

Superheat Adjustment

NOTE: Superheat adjustments should not be made until indoor ambient conditions have stabilized. This could take up to 24 hours depending on indoor temperature and humidity. Before checking superheat, run the unit in cooling for 15-20 minutes or until refrigerant pressures stabilize. Use the following guidelines and methods to check unit operation and ensure that the refrigerant charge is within limits.

For TXV systems, to adjust superheat, unscrew the cover from the expansion valve, locate the adjustment screw, and turn it clockwise (in) to increase superheat or counterclockwise (out) to decrease superheat. It is recommended to make small adjustments at a time, 1/8-1/4 turn increments. Replace adjustment cap. Wait a minimum of 15 minutes between adjustments to allow time for the TXV and pressures to stabilize.

See the specification sheet or technical information manual for the design subcooling range for your unit.

Refrigerant Charge Check

Note: For optimal performance, follow charging instructions below.

(Units with Expansion Valve (TXV))

Run unit on High Stage cooling and refer to Design Superheat & Subcooling table

1. Purge gauge lines. Connect service gauge manifold to access fittings. Run system at least 10 minutes to allow pressure to stabilize.
2. Temporarily install thermometer on liquid (small) line near liquid line access fitting with adequate contact and insulate for best possible reading.
3. Check subcooling and superheat. System should have a subcooling and superheat within the range listed on the Design Superheat and Subcooling table.

   a. If subcooling and superheat are low, adjust TXV superheat, then check subcooling.
   NOTE: To adjust superheat, turn the valve stem clockwise to increase and counterclockwise to decrease.

   b. If subcooling is low and superheat is high, add charge to raise subcooling then check superheat.

   c. If subcooling and superheat are high, adjust TXV valve superheat, then check subcooling.

   d. If subcooling is high and superheat is low, adjust TXV valve superheat and remove charge to lower the subcooling.

NOTE: Do NOT adjust the charge based on suction pressure unless there is a gross undercharge. If an under charge is suspected recover the charge, re-evacuate the system and recharge per data plate. No adjustments should be made if suspecting a charge issue.

4. Disconnect manifold set, installation is complete.

Design Superheat and Subcooling for AC					
Model	Superheat ±2°F (Circuit 1/2)	Subcooling ±1°F (Circuit 1/2)	Expansion Device	Cooling Stage	Outdoor ambient (°F)
DHC090*	17/18	9/10	TXV	High	95
DHC102*	23/19	10/8	TXV	High	95
DHC120*	15/17	10/11	TXV	High	95
DHC150*	19/18	9/9	TXV	High	95

Recovery

When removing refrigerant from a system, either for servicing or decommissioning, all refrigerants must be removed safely.

When transferring refrigerant into cylinders, ensure that only appropriate refrigerant recovery cylinders are employed. Ensure that the correct number of cylinders for holding the total system charge is available. All cylinders to be used are designated for the recovered refrigerant and labeled for that refrigerant (i.e. special cylinders for the recovery of refrigerant). Cylinders shall be complete with pressure-relief valve and associated shut-off valves in good working order. Empty recovery cylinders are evacuated and, if possible, cooled before recovery occurs.

All recovery equipment must be suitable for the recovery of A2L refrigerant and in good working order. Ensure that you follow the manufacturer's instructions carefully. If in doubt, the manufacturer should be consulted. In addition, a set of calibrated weighing scales shall be available and in good working order. Hoses shall be complete with leak-free disconnect couplings and in good condition.

The recovered refrigerant shall be processed according to local legislation in the correct recovery cylinder, and the relevant waste transfer note arranged. Do not mix refrigerants in recovery units and especially not in cylinders.

If compressors or compressor oils are to be removed, ensure that they have been evacuated to an acceptable level to make certain that flammable refrigerant does not remain within the lubricant. The compressor body shall not be heated by an open flame or other ignition sources to accelerate this process. When oil is drained from a system, it shall be carried out safely.

Charging Procedures

In addition to conventional charging procedures, the following requirements shall be followed.

- Ensure that contamination of different refrigerants does not occur when using charging equipment. Hoses or lines shall be as short as possible to minimize the amount of refrigerant contained in them.
- Cylinders shall be kept in an appropriate position according to the instructions.
- Ensure that the REFRIGERATING SYSTEM is grounded prior to charging the system with refrigerant.
- Label the system when charging is complete (if not already).
- Extreme care shall be taken not to overfill the REFRIGERATING SYSTEM.

Note: "Grounding" is defined as achieving an earth ground by connecting the equipment's supplied grounding lug to the earth. This should be verified by a certified technician.

Prior to recharging the system, it shall be pressure-tested with the appropriate purging gas. The system shall be leak-tested on completion of charging but prior to commissioning. A follow up leak test shall be carried out prior to leaving the site.

Important: Refer to the standing pressure test / Leak Detection Method referenced later in this manual.

THE FOLLOWING INSTRUCTIONS ARE MANDATORY FOR A2L SYSTEMS AND SUPERSEDE OTHER INSTRUCTIONS

WARNING
ONLY BRAZING TECHNIQUES AND APPROVED MECHANICAL JOINTS SHOULD BE USED TO CONNECT REFRIGERANT TUBING CONNECTIONS. NON-APPROVED MECHANICAL CONNECTORS AND OTHER METHODS ARE NOT PERMITTED IN THIS SYSTEM CONTAINING A2L REFRIGERANT. APPROVED MECHANICAL JOINTS WILL BE DETAILED IN THE PRODUCT'S SPECIFICATION SHEETS.

STANDING PRESSURE TEST/ LEAK DETECTION METHOD

Using dry nitrogen or dry helium, pressurize the system to 450 PSIG. Allow the pressure to stabilize and hold for 15 minutes (minimum). The system is considered leak-free if the pressure does not drop below 450 PSIG. If, after 15 minutes, the pressure drops below 450 PSIG, it implies a leak in the system. Proceed with identifying and sealing the leak and repeating the Standing Pressure Test. Leak test the system using dry nitrogen or dry helium and soapy water to identify leaks. **No refrigerant shall be used for pressure testing to detect leaks.** Proceed to system evacuation using the Deep Vacuum Method.

DEEP VACUUM METHOD

The Deep Vacuum Method requires a vacuum pump rated for 500 microns or less. This method effectively and efficiently ensures the system is free of non-condensable air and moisture. The Triple Evacuation Method is detailed in the Service Manual for this product model as an alternative. To expedite the evacuation procedure, it is recommended that the Schrader Cores be removed from the service valves using a core-removal tool.

1. Connect the vacuum pump, micron gauge, and vacuum-rated hoses to both service valves. Evacuation must use both service valves to eliminate system mechanical seals.
2. Evacuate the system to less than 500 microns.
3. Isolate the pump from the system and hold the vacuum for 10 minutes (minimum). Typically, pressure will rise slowly during this period. If the pressure rises to less than 1000 microns and remains steady, the system is considered leak-free; proceed to system charging and startup.
4. If pressure rises above 1000 microns but holds steady below 2000 microns, non-condensable air or moisture may remain, or a small leak may be present. Return to step 2: If the same result is achieved, check for leaks and repair. Repeat the evacuation procedure.
5. If pressure rises above 2000 microns, a leak is present. Check for leaks and repair them. Then, repeat the evacuation procedure.

ACCESSORY INSTALLATION

WARNING
ALL ACCESSORIES THAT MAY BECOME A POTENTIAL IGNITION SOURCE IF INSTALLED, SUCH AS ELECTRONIC AIR CLEANERS, MUST ONLY BE POWERED THROUGH OUR ACCESSORY CONTROL BOARD KIT. IF AN ELECTRONIC AIR CLEANER IS ALREADY INSTALLED IN THE DUCT WORK AND NOT CONNECTED TO THE ACCESSORY CONTROL BOARD, IT WILL HAVE TO BE DISABLED OR REMOVED. ENSURE THAT ANY ADDITIONAL WIRING FROM THE INDOOR UNIT TO THE ACCESSORY CONTROL BOARD IS ROUTED AND PROTECTED FROM DAMAGE AND WEAR, AVOIDING ANY JOINTS THAT MAY NEED BRAZED OR DISCONNECTED FOR SERVICE. REFER TO THE PRODUCT SPECIFICATION SHEET FOR THE ACCESSORY CONTROL BOARD KIT PART NUMBER

ALTITUDE ADJUSTMENT FACTOR TO CALCULATE MINIMUM ROOM AREA

The Indoor equipment mitigation requirements are calculated at sea level. For higher altitudes adjust the minimum room area specified on or near the Serial Plate by the corresponding altitude adjustment factor shown below. This table is provided as a reference.

Adjusted room area ($A_{min\ adj}$) is the product of the minimum room area specified in the serial plate and the adjustment factor AF, as shown in below formula

$A_{min\ adj}$ = A_{min} (serial plate) * AF

Height in meters	Height in feet	Altitude Adjustment Factor (AF)
At sea level	At sea level	1.00
1~200	1~660	1.02
200~400	660~1320	1.03
400~600	1320~1970	1.05
600~800	1970~2630	1.07
800~1000	2630~3290	1.09
1000~1200	3290~3940	1.11
1200~1400	3940~4600	1.13
1400~1600	4600~5250	1.15
1600~1800	5250~5910	1.17
1800~2000	5910~6570	1.19
2000~2200	6570~7220	1.21
2200~2400	7220~7880	1.24
2400~2600	7880~8540	1.26
2600~2800	8540~9190	1.29
2800~3000	9190~9850	1.31
3000~3200	9850~10500	1.34

Final System Checks

1. Check to see if all supply and return air grilles are adjusted and the air distribution system is balanced for the best compromise between heating and cooling.
2. Check for air leaks in the ductwork. See Sections on Air Flow Adjustments.
3. Make sure the unit is free of “rattles”, and the tubing in the unit is free from excessive vibration. Also make sure tubes or lines are not rubbing against each other or sheet metal surfaces or edges. If so, correct the trouble.
4. Set the thermostat at the appropriate setting for cooling and heating or automatic changeover for normal use.
5. Be sure the Owner is instructed on the unit operation, filter, servicing, correct thermostat operation, etc.

MAINTENANCE

WARNING

ELECTRICAL SHOCK, FIRE OR EXPLOSION HAZARD

Failure to follow safety warnings exactly could result in dangerous operation, serious injury, death or property damage.

Improper servicing could result in dangerous operation, serious injury, death or property damage.

- **Before servicing, disconnect all electrical power to furnace.**
- **When servicing controls, label all wires prior to disconnecting. Reconnect wires correctly.**
- **Verify proper operation after servicing.**

WARNING

HIGH VOLTAGE

Disconnect all power before servicing or installing this unit. Multiple power sources may be present. Failure to do so may cause property damage, personal injury or death.

WARNING

To prevent personal injury or death due to improper installation, adjustment, alteration, service or maintenance, refer to this manual. For additional assistance or information, consult a qualified installer, servicer agency or the gas supplier.

CAUTION

Sheet metal parts, screws, clips and similar items inherently have sharp edges, and it is necessary that the installer and service personnel exercise caution.

Preventive maintenance is the best way to avoid unnecessary expense and inconvenience. Have this system inspected at regular intervals by qualified service personnel, at least twice a year. Routine maintenance should cover the following items:

1. Tighten all set screws, and wire connections.
2. Clean evaporator and condenser coils mechanically or with cold water, if necessary. Usually any fouling is only matted on the entering air face of the coil and can be removed by brushing.
3. Replace filters as needed (see below).
4. Check for blockage of condensate drain.
5. Check power and control voltages.
6. Check running amperage.
7. Check operating temperatures and pressures.
8. Check and adjust temperature and pressure controls.
9. Check and adjust damper linkages.
10. Check operation of all safety controls.
11. Check condenser fans and tighten set screws.

Filters

CAUTION

To prevent property damage due to fire and loss of equipment efficiency or equipment damage due to dust and lint build up on internal parts, never operate unit without an air filter installed in the return air system.

Every application may require a different frequency of replacement of dirty filters. Filters must be replaced at least every three (3) months during operating seasons.

Dirty filters are the most common cause of inadequate heating or cooling performance. Filter inspection should be made at least every two months; more often if necessary because of local conditions and usage.

Dirty throwaway filters should be discarded and replaced with a new, clean filter.

Disposable return air filters are supplied with this unit. See the unit Specification Sheet or Technical Manual for the correct size and part number. To remove the filters, remove the filter access panel on return side of the unit.

Cabinet Finish Maintenance

Use a fine grade automotive wax on the cabinet finish to maintain the finishes original high luster. This is especially important in installations with extended periods of direct sunlight.

Clean Indoor Coil (Qualified Servicer Only)

Before cleaning the indoor coil, A2L sensor must be removed from the unit to avoid damage and contamination. Air filters should also be removed before performing maintenance. The coil with the filtered air flowing over it should be inspected and cleaned as frequently as necessary to keep the finned areas free of debris. Any air blowing or water rinsing should be performed from inside-out (opposite operating airflow direction) to prevent damage to the tube, fin coil and any other components.

Clean Outside Coil (Qualified Servicer Only)

The coil with the outside air flowing over it should be inspected annually and cleaned as frequently as necessary to keep the finned areas free of lint, hair and debris.

Lubrication

The fan shaft bearings , the supply fan motors, the condenser fan motors and compressors are permanently lubricated.

Functional Parts

Refer to the unit Parts Catalog for a list of functional parts. Parts are available from your distributor.

Servicing Measures for the Refrigerant Detection System:

Before servicing, identify the mode of operation of the system by reading the LED flashing pattern on the PCB within the control box and matching the LED flashing pattern with mode of operation in the REFRIGERANT DETECTION SYSTEM TROUBLESHOOTING GUIDE on the wiring diagram which is attached on the back side of the control box panel (RDS PCB Fault Code table). After identifying the mode of operation, take recommended actions as specified in the Recommended Actions for PCB LED Flashing Codes table.

Refrigerant Sensors for Refrigerant:

DETECTION SYSTEMS shall only be replaced with sensors specified by the manufacturer. If the REFRIGERANT SENSOR requires replacement, please replace with Sensata R32 Sensor PN#RGD-00ML12 (Daikin PN#SER2A08012).

LED STATUS	
MODE	**LED FLASHING PATTERN**
NORMAL OPERATION	SLOW LED FLASHING PATTERN (2 SECONDS ON 2 SECONDS OFF)
R-32 LEAK ALARM	FAST LED FLASHING PATTERN
DELAY MODE	LED WILL BE ON CONTINUOUSLY
SYSTEM VERIFICATION MODE	FAST LED FLASHING PATTERN
CONTROL BOARD INTERNAL FAULT	LED WILL FLASH 2 TIMES AND THEN BE OFF FOR 5 SECONDS
R32 SENSOR COMMUNICATION FAULT	LED WILL FLASH 3 TIMES AND THEN BE OFF FOR 5 SECONDS
R32 SENSOR FAULT	LED WILL FLASH 4 TIMES AND THEN BE OFF FOR 5 SECONDS

RDS PCB Fault Code Table

APPENDIX A BLOWER PERFORMANCE TABLES - AC

7.5 Ton Cooler

Standard Static Direct Drive

Models: DHC0903D, DHC0904D, DHC0907D

Down Flow				
SPEED TAP	ESP	CFM	RPM	BHP
T1	0.2	2013	593	0.38
	0.4	1848	663	0.43
	0.6	1682	733	0.48
	0.8	1517	803	0.52
T2	0.2	2554	673	0.64
	0.4	2428	731	0.70
	0.6	2269	792	0.75
	0.8	2126	841	0.80
T3	0.2	3038	751	0.98
	0.4	2928	801	1.04
	0.6	2816	852	1.11
	0.8	2713	901	1.17
T4	0.2	3220	779	1.13
	0.4	3103	829	1.20
	0.6	3001	876	1.27
	0.8	2892	923	1.34
T5	0.2	3390	812	1.29
	0.4	3281	859	1.37
	0.6	3178	905	1.44
	0.8	3075	947	1.51

Horizontal Flow				
SPEED TAP	ESP	CFM	RPM	BHP
T1	0.2	1863	481	0.31
	0.4	1644	557	0.36
	0.6	-	-	-
	0.8	-	-	-
T2	0.2	2422	567	0.54
	0.4	2325	618	0.59
	0.6	2147	683	0.65
	0.8	1889	762	0.73
T3	0.2	2993	652	0.85
	0.4	2869	696	0.91
	0.6	2730	742	0.97
	0.8	2606	788	1.03
T4	0.2	3176	683	0.99
	0.4	3056	719	1.04
	0.6	2914	763	1.10
	0.8	2808	807	1.17
T5	0.2	3350	713	1.15
	0.4	3248	749	1.20
	0.6	3116	789	1.27
	0.8	3027	831	1.34

Down Flow				
SPEED TAP	ESP	CFM	RPM	BHP
T6	0.2	3038	751	0.98
	0.4	2928	801	1.04
	0.6	2816	852	1.11
	0.8	2713	901	1.17
T7	0.2	3390	812	1.29
	0.4	3281	859	1.37
	0.6	3178	905	1.44
	0.8	3075	947	1.51
T8	0.2	3038	751	0.98
	0.4	2928	801	1.04
	0.6	2816	852	1.11
	0.8	2713	901	1.17
T9	0.2	3220	779	1.13
	0.4	3103	829	1.20
	0.6	3001	876	1.27
	0.8	2892	923	1.34
T10	0.2	3390	812	1.29
	0.4	3281	859	1.37
	0.6	3178	905	1.44
	0.8	3075	947	1.51

Horizontal Flow				
SPEED TAP	ESP	CFM	RPM	BHP
T6	0.2	2993	652	0.85
	0.4	2869	696	0.91
	0.6	2730	742	0.97
	0.8	2606	788	1.03
T7	0.2	3350	713	1.15
	0.4	3248	749	1.20
	0.6	3116	789	1.27
	0.8	3027	831	1.34
T8	0.2	2097	519	0.40
	0.4	2869	696	0.91
	0.6	2730	742	0.97
	0.8	2606	788	1.03
T9	0.2	3176	683	0.99
	0.4	3056	719	1.04
	0.6	2914	763	1.10
	0.8	2808	807	1.17
T10	0.2	3350	713	1.15
	0.4	3248	749	1.20
	0.6	3116	789	1.27
	0.8	3027	831	1.34

7.5 Ton Cooler

Medium Static Direct Drive

Models: DHC0903L, DHC0904L, DHC0907L

Down Flow				
SPEED TAP	ESP	CFM	RPM	BHP
T1	0.20	2013	593	0.38
	0.40	1848	663	0.43
	0.60	1682	733	0.48
	0.80	1517	803	0.52
	1.00	-	-	-
	1.20	-	-	-
	1.40	-	-	-
T2	0.2	3123	768	1.05
	0.4	3011	818	1.12
	0.6	2902	864	1.18
	0.8	2798	912	1.25
	1.0	2681	961	1.32
	1.2	2501	1010	1.38
	1.4	2266	1076	1.47
T3	0.2	3038	751	0.98
	0.4	2928	801	1.04
	0.6	2816	852	1.11
	0.8	2713	901	1.17
	1.0	2591	951	1.24
	1.2	2369	1003	1.31
	1.4	-	-	-
T4	0.2	3538	847	1.47
	0.4	3436	884	1.54
	0.6	3325	930	1.62
	0.8	3243	971	1.69
	1.0	3154	1017	1.77
	1.2	3040	1056	1.84
	1.4	2918	1095	1.90
T5	0.2	3675	866	1.63
	0.4	3577	906	1.70
	0.6	3483	948	1.78
	0.8	3385	988	1.86
	1.0	3300	1028	1.93
	1.2	3208	1070	2.01
	1.4	3112	1109	2.09

Horizontal Flow				
SPEED TAP	ESP	CFM	RPM	BHP
T1	0.20	1863	481	0.31
	0.40	1644	557	0.36
	0.60	-	-	-
	0.80	-	-	-
	1.00	-	-	-
	1.20	-	-	-
	1.40	-	-	-
T2	0.20	3067	653	0.89
	0.40	2912	696	0.95
	0.60	2711	750	1.03
	0.80	2564	791	1.08
	1.00	2396	837	1.15
	1.20	2132	905	1.24
	1.40	1872	971	1.33
T3	0.2	2950	667	0.87
	0.4	2869	696	0.91
	0.6	2730	742	0.97
	0.8	2606	788	1.03
	1.0	2456	841	1.10
	1.2	-	-	-
	1.4	-	-	-
T4	0.2	3559	653	1.28
	0.4	3410	781	1.36
	0.6	3292	818	1.42
	0.8	3217	849	1.48
	1.0	3084	892	1.55
	1.2	2966	931	1.62
	1.4	2845	971	1.69
T5	0.2	3676	775	1.48
	0.4	3529	819	1.56
	0.6	3451	847	1.61
	0.8	3359	880	1.68
	1.0	3227	919	1.75
	1.2	3129	954	1.82
	1.4	3001	993	1.89

Down Flow				
SPEED	ESP	CFM	RPM	BHP
T6	0.2	3390	812	1.29
	0.4	3281	859	1.37
	0.6	3178	905	1.44
	0.8	3075	947	1.51
	1.0	2968	994	1.59
	1.2	2861	1036	1.65
	1.4	-	-	-
T7	0.2	3675	866	1.63
	0.4	3577	906	1.70
	0.6	3483	948	1.78
	0.8	3385	988	1.86
	1.0	3300	1028	1.93
	1.2	3208	1070	2.01
	1.4	3112	1109	2.09
T8	0.2	3390	812	1.29
	0.4	3281	859	1.37
	0.6	3178	905	1.44
	0.8	3075	947	1.51
	1.0	2968	994	1.59
	1.2	2861	1036	1.65
	1.4	-	-	-
T9	0.2	3538	847	1.47
	0.4	3436	884	1.54
	0.6	3325	930	1.62
	0.8	3243	971	1.69
	1.0	3154	1017	1.77
	1.2	3040	1056	1.84
	1.4	2918	1095	1.90
T10	0.2	3675	866	1.63
	0.4	3577	906	1.70
	0.6	3483	948	1.78
	0.8	3385	988	1.86
	1.0	3300	1028	1.93
	1.2	3208	1070	2.01
	1.4	3112	1109	2.09

Horizontal Flow				
SPEED	ESP	CFM	RPM	BHP
T6	0.2	3350	713	1.15
	0.4	3248	749	1.20
	0.6	3116	789	1.27
	0.8	3027	831	1.34
	1.0	2888	874	1.40
	1.2	2742	923	1.48
	1.4	2611	974	1.57
T7	0.2	3676	775	1.48
	0.4	3529	819	1.56
	0.6	3451	847	1.61
	0.8	3359	880	1.68
	1.0	3227	919	1.75
	1.2	3129	954	1.82
	1.4	3001	993	1.89
T8	0.2	3350	713	1.15
	0.4	3248	749	1.20
	0.6	3116	789	1.27
	0.8	3027	831	1.34
	1.0	2888	874	1.40
	1.2	2742	923	1.48
	1.4	2611	974	1.57
T9	0.2	3559	653	1.28
	0.4	3410	781	1.36
	0.6	3292	818	1.42
	0.8	3217	849	1.48
	1.0	3084	892	1.55
	1.2	2966	931	1.62
	1.4	2845	971	1.69
T10	0.2	3676	775	1.48
	0.4	3529	819	1.56
	0.6	3451	847	1.61
	0.8	3359	880	1.68
	1.0	3227	919	1.75
	1.2	3129	954	1.82
	1.4	3001	993	1.89

Note:

- Taps T1 and T2 are for first stage of cooling only. Taps T6 and T7 are for first stage of heating only. Refer to page 11 for speed tap selection.
- Shaded area are not recommended for cooling or heating operation.
- Airflow table includes resistance for base unit only with 2" clean air filters in place.
  Any Additional air resistance caused by factory or field installed options or accessories must be added to the ESP in order to select the correct speed tap.

APPENDIX A BLOWER PERFORMANCE TABLES - AC

7.5 Ton Cooler

High Static Direct Drive

Models: DHC0903W, DHC0904W, DHC0907W

Down Flow				
SPEED TAP	ESP	CFM	RPM	BHP
T1	0.2	2013	593	0.38
	0.4	1848	663	0.43
	0.6	1682	733	0.48
	0.8	1517	803	0.52
	1.0	-	-	-
	1.2	-	-	-
	1.4	-	-	-
	1.6	-	-	-
	1.8	-	-	-
	2.0	-	-	-
T2	0.2	3220	779	1.13
	0.4	3103	829	1.20
	0.6	3001	876	1.27
	0.8	2892	923	1.34
	1.0	2782	971	1.40
	1.2	2653	1018	1.47
	1.4	2417	1095	1.58
	1.6	2202	1154	1.67
	1.8	2080	1192	1.72
	2.0	1947	1224	1.77
T3	0.2	3038	751	0.98
	0.4	2928	801	1.04
	0.6	2816	852	1.11
	0.8	2713	901	1.17
	1.0	2591	951	1.24
	1.2	2369	1003	1.31
	1.4	-	-	-
	1.6	-	-	-
	1.8	-	-	-
	2.0	-	-	-
T4	0.2	-	-	-
	0.4	-	-	-
	0.6	3696	956	1.94
	0.8	3543	1008	2.05
	1.0	3454	1047	2.13
	1.2	3376	1089	2.21
	1.4	3284	1126	2.29
	1.6	3189	1161	2.36
	1.8	3054	1217	2.47
	2.0	2822	1285	2.61
T5	0.2	-	-	-
	0.4	-	-	-
	0.6	-	-	-
	0.8	3676	1026	2.23
	1.0	3592	1061	2.31
	1.2	3522	1095	2.38
	1.4	3441	1141	2.48
	1.6	3343	1178	2.56
	1.8	3234	1218	2.65
	2.0	3164	1246	2.71

Horizontal Flow				
SPEED TAP	ESP	CFM	RPM	BHP
T1	0.2	1863	481	0.31
	0.4	1644	557	0.36
	0.6	-	-	-
	0.8	-	-	-
	1.0	-	-	-
	1.2	-	-	-
	1.4	-	-	-
	1.6	-	-	-
	1.8	-	-	-
	2.0	-	-	-
T2	0.2	3152	684	0.99
	0.4	3056	719	1.04
	0.6	2899	768	1.11
	0.8	2808	807	1.17
	1.0	2647	851	1.23
	1.2	2476	910	1.32
	1.4	2182	987	1.43
	1.6	2014	1034	1.50
	1.8	1886	1068	1.54
	2.0	1764	1102	1.59
T3	0.2	2993	652	0.85
	0.4	2869	696	0.91
	0.6	2730	742	0.97
	0.8	2606	788	1.03
	1.0	2456	841	1.10
	1.2	2333	884	1.15
	1.4	-	-	-
	1.6	-	-	-
	1.8	-	-	-
	2.0	-	-	-
T4	0.2	-	-	-
	0.4	-	-	-
	0.6	3644	851	1.73
	0.8	3496	897	1.82
	1.0	3378	933	1.89
	1.2	3281	969	1.97
	1.4	3165	1004	2.04
	1.6	3029	1046	2.12
	1.8	2901	1088	2.21
	2.0	2719	1140	2.31
T5	0.2	-	-	-
	0.4	-	-	-
	0.6	-	-	-
	0.8	3629	927	2.02
	1.0	3533	958	2.09
	1.2	3448	988	2.15
	1.4	3342	1021	2.22
	1.6	3230	1057	2.30
	1.8	3114	1095	2.38
	2.0	2976	1142	2.49

Down Flow				
SPEED	ESP	CFM	RPM	BHP
T6	0.2	3586	881	1.66
	0.4	3577	906	1.70
	0.6	3483	948	1.78
	0.8	3385	988	1.86
	1.0	3300	1028	1.93
	1.2	3208	1070	2.01
	1.4	3112	1109	2.09
	1.6	2995	1150	2.16
	1.8	2874	1197	2.25
	2.0	2573	1279	2.41
T7	0.2	-	-	-
	0.4	-	-	-
	0.6	-	-	-
	0.8	3676	1026	2.23
	1.0	3592	1061	2.31
	1.2	3522	1095	2.38
	1.4	3441	1141	2.48
	1.6	3343	1178	2.56
	1.8	3234	1218	2.65
	2.0	3164	1246	2.71
T8	0.2	3586	881	1.66
	0.4	3577	906	1.70
	0.6	3483	948	1.78
	0.8	3385	988	1.86
	1.0	3300	1028	1.93
	1.2	3208	1070	2.01
	1.4	3112	1109	2.09
	1.6	2995	1150	2.16
	1.8	2874	1197	2.25
	2.0	2573	1279	2.41
T9	0.2	-	-	-
	0.4	-	-	-
	0.6	3696	956	1.94
	0.8	3543	1008	2.05
	1.0	3454	1047	2.13
	1.2	3376	1089	2.21
	1.4	3284	1126	2.29
	1.6	3189	1161	2.36
	1.8	3054	1217	2.47
	2.0	2822	1285	2.61
T10	0.2	-	-	-
	0.4	-	-	-
	0.6	-	-	-
	0.8	3676	1026	2.23
	1.0	3592	1061	2.31
	1.2	3522	1095	2.38
	1.4	3441	1141	2.48
	1.6	3343	1178	2.56
	1.8	3234	1218	2.65
	2.0	3164	1246	2.71

Horizontal Flow				
SPEED	ESP	CFM	RPM	BHP
T6	0.2	3586	764	1.47
	0.4	3529	819	1.56
	0.6	3451	847	1.61
	0.8	3359	880	1.68
	1.0	3227	919	1.75
	1.2	3129	954	1.82
	1.4	3001	993	1.89
	1.6	2840	1040	1.98
	1.8	2702	1085	2.07
	2.0	2471	1142	2.18
T7	0.2	-	-	-
	0.4	-	-	-
	0.6	-	-	-
	0.8	3629	927	2.02
	1.0	3533	958	2.09
	1.2	3448	988	2.15
	1.4	3342	1021	2.22
	1.6	3230	1057	2.30
	1.8	3114	1095	2.38
	2.0	2976	1142	2.49
T8	0.2	3586	764	1.47
	0.4	3529	819	1.56
	0.6	3451	847	1.61
	0.8	3359	880	1.68
	1.0	3227	919	1.75
	1.2	3129	954	1.82
	1.4	3001	993	1.89
	1.6	2840	1040	1.98
	1.8	2702	1085	2.07
	2.0	2471	1142	2.18
T9	0.2	-	-	-
	0.4	-	-	-
	0.6	3644	851	1.73
	0.8	3496	897	1.82
	1.0	3378	933	1.89
	1.2	3281	969	1.97
	1.4	3165	1004	2.04
	1.6	3029	1046	2.12
	1.8	2901	1088	2.21
	2.0	2719	1140	2.31
T10	0.2	-	-	-
	0.4	-	-	-
	0.6	-	-	-
	0.8	3629	927	2.02
	1.0	3533	958	2.09
	1.2	3448	988	2.15
	1.4	3342	1021	2.22
	1.6	3230	1057	2.30
	1.8	3114	1095	2.38
	2.0	2976	1142	2.49

Note:

- Taps T1 and T2 are for first stage of cooling only. Taps T6 and T7 are for first stage of heating only. Refer to page 11 for speed tap selection.
- Shaded area are not recommended for cooling or heating operation.
- Airflow table includes resistance for base unit only with 2" clean air filters in place.
  Any Additional air resistance caused by factory or field installed options or accessories must be added to the ESP in order to select the correct speed tap.

APPENDIX A BLOWER PERFORMANCE TABLES - AC

8.5Ton Cooler

Standard Static Direct Drive

Models: DHC1023D, DHC1024D, DHC1027D

Down Flow				
SPEED TAP	ESP	CFM	RPM	BHP
T1	0.2	2160	472	0.37
	0.4	1958	530	0.41
	0.6	-	-	-
	0.8	-	-	-
T2	0.2	2805	564	0.64
	0.4	2638	619	0.70
	0.6	2435	676	0.76
	0.8	2256	723	0.82
T3	0.2	3131	609	0.83
	0.4	2967	657	0.90
	0.6	2774	709	0.97
	0.8	2605	750	1.03
T4	0.2	3366	644	1.00
	0.4	3222	689	1.08
	0.6	3055	738	1.15
	0.8	2891	778	1.21
T5	0.2	3824	703	1.36
	0.4	3704	743	1.43
	0.6	3531	773	1.50
	0.8	3414	823	1.60

Horizontal Flow				
SPEED TAP	ESP	CFM	RPM	BHP
T1	0.2	2209	462	0.36
	0.4	2046	524	0.41
	0.6	-	-	-
	0.8	-	-	-
T2	0.2	2822	557	0.63
	0.4	2693	609	0.69
	0.6	2534	663	0.75
	0.8	2451	706	0.80
T3	0.2	3133	601	0.82
	0.4	3017	647	0.89
	0.6	2858	699	0.96
	0.8	2787	735	1.01
T4	0.2	3381	642	1.00
	0.4	3274	685	1.07
	0.6	3143	733	1.14
	0.8	3058	768	1.20
T5	0.2	3806	697	1.34
	0.4	3727	734	1.42
	0.6	3590	781	1.49
	0.8	3556	820	1.58

Down Flow				
SPEED TAP	ESP	CFM	RPM	BHP
T6	0.2	3131	609	0.83
	0.4	2967	657	0.90
	0.6	2774	709	0.97
	0.8	-	-	-
T7	0.2	3824	703	1.36
	0.4	3704	743	1.43
	0.6	3531	773	1.50
	0.8	3414	823	1.60
T8	0.2	3131	609	0.83
	0.4	2967	657	0.90
	0.6	2774	709	0.97
	0.8	-	-	-
T9	0.2	3366	644	1.00
	0.4	3222	689	1.08
	0.6	3055	738	1.15
	0.8	2891	778	1.21
T10	0.2	3824	703	1.36
	0.4	3704	743	1.43
	0.6	3531	773	1.50
	0.8	3414	823	1.60

Horizontal Flow				
SPEED TAP	ESP	CFM	RPM	BHP
T6	0.2	3133	601	0.82
	0.4	3017	647	0.89
	0.6	2858	699	0.96
	0.8	2787	735	1.01
T7	0.2	3806	697	1.34
	0.4	3727	734	1.42
	0.6	3590	781	1.49
	0.8	3556	820	1.58
T8	0.2	3133	601	0.82
	0.4	3017	647	0.89
	0.6	2858	699	0.96
	0.8	2787	735	1.01
T9	0.2	3381	642	1.00
	0.4	3274	685	1.07
	0.6	3143	733	1.14
	0.8	3058	768	1.20
T10	0.2	3806	697	1.34
	0.4	3727	734	1.42
	0.6	3590	781	1.49
	0.8	3556	820	1.58

8.5 Ton Cooler

Medium Static Direct Drive

Models: DHC1023L, DHC1024L, DHC1027L

Down Flow				
SPEED TAP	ESP	CFM	RPM	BHP
T1	0.2	2160	472	0.37
	0.4	1958	530	0.41
	0.6	1703	601	0.46
	0.8	-	-	-
	1.0	-	-	-
	1.2	-	-	-
	1.4	-	-	-
T2	0.2	3366	644	1.00
	0.4	3222	689	1.08
	0.6	3055	738	1.15
	0.8	2891	778	1.21
	1.0	2680	829	1.29
	1.2	2478	872	1.36
	1.4	2274	908	1.42
T3	0.2	3131	609	0.83
	0.4	2967	657	0.90
	0.6	2774	709	0.97
	0.8	2605	750	1.03
	1.0	-	-	-
	1.2	-	-	-
	1.4	-	-	-
T4	0.2	3814	703	1.34
	0.4	3652	747	1.42
	0.6	3489	790	1.50
	0.8	3305	832	1.59
	1.0	3125	872	1.66
	1.2	2941	912	1.74
	1.4	-	-	-
T5	0.2	-	-	-
	0.4	4246	810	1.76
	0.6	4022	846	1.85
	0.8	3854	881	1.94
	1.0	3685	917	2.03
	1.2	3572	952	2.11
	1.4	3348	987	2.20

Horizontal Flow				
SPEED TAP	ESP	CFM	RPM	BHP
T1	0.2	2209	462	0.36
	0.4	2046	524	0.41
	0.6	1841	600	0.46
	0.8	-	-	-
	1.0	-	-	-
	1.2	-	-	-
	1.4	-	-	-
T2	0.2	3381	642	1.00
	0.4	3274	685	1.07
	0.6	3143	733	1.14
	0.8	3058	768	1.20
	1.0	2900	821	1.28
	1.2	2784	860	1.34
	1.4	2672	895	1.40
T3	0.2	3133	601	0.82
	0.4	3017	647	0.89
	0.6	2858	699	0.96
	0.8	2787	735	1.01
	1.0	2630	787	1.08
	1.2	-	-	-
	1.4	-	-	-
T4	0.2	3804	692	1.32
	0.4	3698	735	1.40
	0.6	3595	776	1.48
	0.8	3480	817	1.56
	1.0	3364	856	1.63
	1.2	3260	893	1.70
	1.4	3151	931	1.77
T5	0.2	-	-	-
	0.4	4220	795	1.73
	0.6	4127	828	1.81
	0.8	4033	862	1.90
	1.0	3940	894	1.98
	1.2	3846	929	2.06
	1.4	3753	963	2.15

Down Flow				
SPEED TAP	ESP	CFM	RPM	BHP
T6	0.2	3565	671	1.15
	0.4	3412	715	1.22
	0.6	3247	760	1.30
	0.8	3089	795	1.36
	1.0	2874	846	1.45
	1.2	-	-	-
	1.4	-	-	-
T7	0.2	-	-	-
	0.4	4246	810	1.76
	0.6	4022	846	1.85
	0.8	3854	881	1.94
	1.0	3685	917	2.03
	1.2	3572	952	2.11
	1.4	3348	987	2.20
T8	0.2	3565	671	1.15
	0.4	3412	715	1.22
	0.6	3247	760	1.30
	0.8	3089	795	1.36
	1.0	2874	846	1.45
	1.2	-	-	-
	1.4	-	-	-
T9	0.2	3814	703	1.34
	0.4	3652	747	1.42
	0.6	3489	790	1.50
	0.8	3305	832	1.59
	1.0	3125	872	1.66
	1.2	2941	912	1.74
	1.4	-	-	-
T10	0.2	-	-	-
	0.4	4246	810	1.76
	0.6	4022	846	1.85
	0.8	3854	881	1.94
	1.0	3685	917	2.03
	1.2	3572	952	2.11
	1.4	3348	987	2.20

Horizontal Flow				
SPEED TAP	ESP	CFM	RPM	BHP
T6	0.2	3560	660	1.13
	0.4	3452	704	1.20
	0.6	3330	748	1.28
	0.8	3251	787	1.35
	1.0	3111	834	1.42
	1.2	3018	869	1.48
	1.4	2918	907	1.55
T7	0.2	-	-	-
	0.4	4220	795	1.73
	0.6	4127	828	1.81
	0.8	4033	862	1.90
	1.0	3940	894	1.98
	1.2	3846	929	2.06
	1.4	3753	963	2.15
T8	0.2	3560	660	1.13
	0.4	3452	704	1.20
	0.6	3330	748	1.28
	0.8	3251	787	1.35
	1.0	3111	834	1.42
	1.2	3018	869	1.48
	1.4	2918	907	1.55
T9	0.2	3804	692	1.32
	0.4	3698	735	1.40
	0.6	3595	776	1.48
	0.8	3480	817	1.56
	1.0	3364	856	1.63
	1.2	3260	893	1.70
	1.4	3151	931	1.77
T10	0.2	-	-	-
	0.4	4220	795	1.73
	0.6	4127	828	1.81
	0.8	4033	862	1.90
	1.0	3940	894	1.98
	1.2	3846	929	2.06
	1.4	3753	963	2.15

Note:

- Taps T1 and T2 are for first stage of cooling only. Taps T6 and T7 are for first stage of heating only. Refer to page 11 for speed tap selection.
- Shaded area are not recommended for cooling or heating operation.
- Airflow table includes resistance for base unit only with 2" clean air filters in place.
  Any Additional air resistance caused by factory or field installed options or accessories must be added to the ESP in order to select the correct speed tap.

APPENDIX A BLOWER PERFORMANCE TABLES - AC

8.5Ton Cooler

High Static Direct Drive

Models: DHC1023W, DHC1024W, DHC1027W

Down Flow				
SPEED TAP	ESP	CFM	RPM	BHP
T1	0.2	2160	472	0.37
	0.4	1958	530	0.41
	0.6	1703	601	0.46
	0.8	-	-	-
	1.0	-	-	-
	1.2	-	-	-
	1.4	-	-	-
	1.6	-	-	-
	1.8	-	-	-
	2.0	-	-	-
T2	0.2	3814	703	1.34
	0.4	3652	747	1.42
	0.6	3489	790	1.50
	0.8	3305	832	1.59
	1.0	3125	872	1.66
	1.2	2941	912	1.74
	1.4	2743	952	1.81
	1.6	2559	987	1.88
	1.8	2366	1021	1.94
	2.0	2212	1048	2.00
T3	0.2	3131	609	0.83
	0.4	2967	657	0.90
	0.6	2774	709	0.97
	0.8	2605	750	1.03
	1.0	-	-	-
	1.2	-	-	-
	1.4	-	-	-
	1.6	-	-	-
	1.8	-	-	-
	2.0	-	-	-
T4	0.2	-	-	-
	0.4	-	-	-
	0.6	4136	866	2.13
	0.8	3938	906	2.23
	1.0	3756	941	2.32
	1.2	3582	977	2.41
	1.4	3379	1011	2.49
	1.6	3208	1043	2.57
	1.8	3024	1081	2.66
	2.0	2816	1099	2.71
T5	0.2	-	-	-
	0.4	-	-	-
	0.6	-	-	-
	0.8	-	-	-
	1.0	4124	975	2.71
	1.2	3958	1008	2.81
	1.4	3757	1040	2.90
	1.6	3584	1071	2.98
	1.8	3395	1102	3.07
	2.0	3209	1130	3.15

Horizontal Flow				
SPEED TAP	ESP	CFM	RPM	BHP
T1	0.2	2209	462	0.36
	0.4	2046	524	0.41
	0.6	1841	600	0.46
	0.8	-	-	-
	1.0	-	-	-
	1.2	-	-	-
	1.4	-	-	-
	1.6	-	-	-
	1.8	-	-	-
	2.0	-	-	-
T2	0.2	3804	692	1.32
	0.4	3698	735	1.40
	0.6	3595	776	1.48
	0.8	3480	817	1.56
	1.0	3364	856	1.63
	1.2	3260	893	1.70
	1.4	3151	931	1.77
	1.6	3040	962	1.83
	1.8	2932	993	1.89
	2.0	2815	1025	1.95
T3	0.2	3133	601	0.82
	0.4	3017	647	0.89
	0.6	2858	699	0.96
	0.8	2787	735	1.01
	1.0	2630	787	1.08
	1.2	-	-	-
	1.4	-	-	-
	1.6	-	-	-
	1.8	-	-	-
	2.0	-	-	-
T4	0.2	4246	843	2.08
	0.4	4137	873	2.15
	0.6	4028	904	2.23
	0.8	3952	929	2.29
	1.0	3867	956	2.36
	1.2	3787	982	2.42
	1.4	3712	1008	2.48
	1.6	3643	1034	2.55
	1.8	3603	1054	2.60
	2.0	3500	1087	2.68
T5	0.2	-	-	-
	0.4	-	-	-
	0.6	-	-	-
	0.8	-	-	-
	1.0	-	-	-
	1.2	4251	984	2.74
	1.4	4143	1018	2.84
	1.6	4050	1049	2.92
	1.8	3952	1081	3.01
	2.0	3847	1112	3.10

T6	0.2	4123	746	1.62
	0.4	3966	787	1.71
	0.6	3807	827	1.79
	0.8	3628	867	1.88
	1.0	3460	905	1.96
	1.2	3275	942	2.0
	1.4	3085	980	2.12
	1.6	2908	1013	2.19
	1.8	-	-	-
	2.0	-	-	-
T7	0.2	-	-	-
	0.4	-	-	-
	0.6	-	-	-
	0.8	-	-	-
	1.0	4124	975	2.71
	1.2	3958	1008	2.81
	1.4	3757	1040	2.90
	1.6	3584	1071	2.98
	1.8	3395	1102	3.07
	2.0	3209	1130	3.15
T8	0.2	4123	746	1.62
	0.4	3966	787	1.71
	0.6	3807	827	1.79
	0.8	3628	867	1.88
	1.0	3460	905	1.96
	1.2	3275	942	2.0
	1.4	3085	980	2.12
	1.6	2908	1013	2.19
	1.8	-	-	-
	2.0	-	-	-
T9	0.2	-	-	-
	0.4	-	-	-
	0.6	4136	866	2.13
	0.8	3938	906	2.23
	1.0	3756	941	2.32
	1.2	3582	977	2.41
	1.4	3379	1011	2.49
	1.6	3208	1043	2.57
	1.8	3024	1081	2.66
	2.0	2816	1099	2.71
T10	0.2	-	-	-
	0.4	-	-	-
	0.6	-	-	-
	0.8	-	-	-
	1.0	4124	975	2.71
	1.2	3958	1008	2.81
	1.4	3757	1040	2.90
	1.6	3584	1071	2.98
	1.8	3395	1102	3.07
	2.0	3209	1130	3.15

T6	0.2	4124	729	1.58
	0.4	4013	771	1.67
	0.6	3905	811	1.76
	0.8	3797	850	1.84
	1.0	3689	886	1.92
	1.2	3586	923	2.0
	1.4	3479	958	2.08
	1.6	3380	991	2.15
	1.8	3289	1023	2.22
	2.0	3174	1051	2.28
T7	0.2	-	-	-
	0.4	-	-	-
	0.6	-	-	-
	0.8	-	-	-
	1.0	-	-	-
	1.2	4251	984	2.74
	1.4	4143	1018	2.84
	1.6	4050	1049	2.92
	1.8	3952	1081	3.01
	2.0	3847	1112	3.10
T8	0.2	4124	729	1.58
	0.4	4013	771	1.67
	0.6	3905	811	1.76
	0.8	3797	850	1.84
	1.0	3689	886	1.92
	1.2	3586	923	2.0
	1.4	3479	958	2.08
	1.6	3380	991	2.15
	1.8	3289	1023	2.22
	2.0	3174	1051	2.28
T9	0.2	4246	843	2.08
	0.4	4137	873	2.15
	0.6	4028	904	2.23
	0.8	3952	929	2.29
	1.0	3867	956	2.36
	1.2	3787	982	2.42
	1.4	3712	1008	2.48
	1.6	3643	1034	2.55
	1.8	3603	1054	2.60
	2.0	3500	1087	2.68
T10	0.2	-	-	-
	0.4	-	-	-
	0.6	-	-	-
	0.8	-	-	-
	1.0	-	-	-
	1.2	4251	984	2.74
	1.4	4143	1018	2.84
	1.6	4050	1049	2.92
	1.8	3952	1081	3.01
	2.0	3847	1112	3.10

Note:

- Taps T1 and T2 are for first stage of cooling only. Taps T6 and T7 are for first stage of heating only. Refer to page 11 for speed tap selection.
- Shaded area are not recommended for cooling or heating operation.
- Airflow table includes resistance for base unit only with 2" clean air filters in place.
  Any Additional air resistance caused by factory or field installed options or accessories must be added to the ESP in order to select the correct speed tap.

APPENDIX A BLOWER PERFORMANCE TABLES - AC

10 Ton Cooler

Standard Static Direct Drive

Models: DHC1203D, DHC1204D, DHC1207D

Down Flow				
Speed Tap	ESP	CFM	RPM	BHP
T1	0.2	2217	420	0.32
	0.4	2010	507	0.38
	0.6	-	-	-
	0.8	-	-	-
T2	0.2	3329	554	0.76
	0.4	3207	606	0.83
	0.6	3013	672	0.92
	0.8	2748	751	1.03
T3	0.2	3702	596	0.97
	0.4	3587	644	1.05
	0.6	3402	702	1.14
	0.8	3280	751	1.23
T4	0.2	4280	662	1.39
	0.4	4143	709	1.49
	0.6	4005	756	1.58
	0.8	3886	802	1.68
T5	0.2	4485	685	1.56
	0.4	4357	732	1.66
	0.6	4225	778	1.77
	0.8	4113	822	1.87

Horizontal Flow				
Speed Tap	ESP	CFM	RPM	BHP
T1	0.2	2246	427	0.32
	0.4	1986	518	0.39
	0.6	-	-	-
	0.8	-	-	-
T2	0.2	3318	567	0.78
	0.4	3173	626	0.86
	0.6	2965	693	0.95
	0.8	2694	768	1.05
T3	0.2	3704	604	0.99
	0.4	3577	658	1.07
	0.6	3388	720	1.17
	0.8	3250	770	1.26
T4	0.2	4220	681	1.43
	0.4	4093	728	1.53
	0.6	3982	770	1.61
	0.8	3824	826	1.73
T5	0.2	4436	705	1.60
	0.4	4307	751	1.71
	0.6	4196	790	1.80
	0.8	4040	847	1.93

Down Flow				
Speed Tap	ESP	CFM	RPM	BHP
T6	0.2	3702	596	0.97
	0.4	3587	644	1.05
	0.6	3402	702	1.14
	0.8	3280	751	1.23
T7	0.2	4485	685	1.56
	0.4	4357	732	1.66
	0.6	4225	778	1.77
	0.8	4113	822	1.87
T8	0.2	3702	596	0.97
	0.4	3587	644	1.05
	0.6	3402	702	1.14
	0.8	3280	751	1.23
T9	0.2	4280	662	1.39
	0.4	4143	709	1.49
	0.6	4005	756	1.58
	0.8	3886	802	1.68
T10	0.2	4485	685	1.56
	0.4	4357	732	1.66
	0.6	4225	778	1.77
	0.8	4113	822	1.87

Horizontal Flow				
Speed Tap	ESP	CFM	RPM	BHP
T6	0.2	3704	604	0.99
	0.4	3577	658	1.07
	0.6	3388	720	1.17
	0.8	3250	770	1.26
T7	0.2	4436	705	1.60
	0.4	4307	751	1.71
	0.6	4196	790	1.80
	0.8	4040	847	1.93
T8	0.2	3704	604	0.99
	0.4	3577	658	1.07
	0.6	3388	720	1.17
	0.8	3250	770	1.26
T9	0.2	4220	681	1.43
	0.4	4093	728	1.53
	0.6	3982	770	1.61
	0.8	3824	826	1.73
T10	0.2	4436	705	1.60
	0.4	4307	751	1.71
	0.6	4196	790	1.80
	0.8	4040	847	1.93

10 Ton Cooler

Medium Static Direct Drive

Models: DHC1203L, DHC1204L, DHC1207L

Down Flow				
Speed Tap	ESP	CFM	RPM	BHP
T1	0.2	2217	420	0.32
	0.4	2010	507	0.38
	0.6	-	-	-
	0.8	-	-	-
	1.0	-	-	-
	1.2	-	-	-
	1.4	-	-	-
T2	0.2	3833	610	1.05
	0.4	3731	656	1.13
	0.6	3554	714	1.23
	0.8	3434	763	1.32
	1.0	3271	818	1.41
	1.2	2968	894	1.54
	1.4	2655	971	1.68
T3	0.2	3702	596	0.97
	0.4	3587	644	1.05
	0.6	3402	702	1.14
	0.8	3280	751	1.23
	1.0	3122	806	1.31
	1.2	-	-	-
	1.4	-	-	-
T4	0.2	4595	699	1.66
	0.4	4470	744	1.77
	0.6	4341	789	1.88
	0.8	4234	833	1.98
	1.0	4123	875	2.08
	1.2	4002	918	2.18
	1.4	3882	961	2.29
T5	0.2	4794	723	1.85
	0.4	4672	767	1.96
	0.6	4545	810	2.07
	0.8	4443	852	2.18
	1.0	4332	891	2.28
	1.2	4215	933	2.39
	1.4	4100	975	2.50

Horizontal Flow				
Speed Tap	ESP	CFM	RPM	BHP
T1	0.2	2246	427	0.32
	0.4	1986	518	0.39
	0.6	-	-	-
	0.8	-	-	-
	1.0	-	-	-
	1.2	-	-	-
	1.4	-	-	-
T2	0.2	3823	622	1.07
	0.4	3713	667	1.15
	0.6	3532	723	1.25
	0.8	3398	775	1.34
	1.0	3223	833	1.44
	1.2	2917	909	1.57
	1.4	2598	988	1.71
T3	0.2	3704	604	0.99
	0.4	3577	658	1.07
	0.6	3388	720	1.17
	0.8	3250	770	1.26
	1.0	3077	824	1.34
	1.2	-	-	-
	1.4	-	-	-
T4	0.2	4546	717	1.71
	0.4	4425	761	1.81
	0.6	4314	803	1.91
	0.8	4170	853	2.03
	1.0	4039	909	2.16
	1.2	3918	943	2.24
	1.4	3784	992	2.36
T5	0.2	4747	741	1.90
	0.4	4634	783	2.00
	0.6	4527	824	2.11
	0.8	4389	870	2.23
	1.0	4266	906	2.32
	1.2	4139	956	2.45
	1.4	3996	1010	2.59

Down Flow				
Speed Tap	ESP	CFM	RPM	BHP
T6	0.2	4485	685	1.56
	0.4	4357	732	1.66
	0.6	4225	778	1.77
	0.8	4113	822	1.87
	1.0	4004	866	2.0
	1.2	3878	910	2.07
	1.4	3760	952	2.16
T7	0.2	4794	723	1.85
	0.4	4672	767	1.96
	0.6	4545	810	2.07
	0.8	4443	852	2.18
	1.0	4332	891	2.28
	1.2	4215	933	2.39
	1.4	4100	975	2.50
T8	0.2	4485	685	1.56
	0.4	4357	732	1.66
	0.6	4225	778	1.77
	0.8	4113	822	1.87
	1.0	4004	866	2.0
	1.2	3878	910	2.07
	1.4	3760	952	2.16
T9	0.2	4595	699	1.66
	0.4	4470	744	1.77
	0.6	4341	789	1.88
	0.8	4234	833	1.98
	1.0	4123	875	2.08
	1.2	4002	918	2.18
	1.4	3882	961	2.29
T10	0.2	4794	723	1.85
	0.4	4672	767	1.96
	0.6	4545	810	2.07
	0.8	4443	852	2.18
	1.0	4332	891	2.28
	1.2	4215	933	2.39
	1.4	4100	975	2.50

Horizontal Flow				
Speed Tap	ESP	CFM	RPM	BHP
T6	0.2	4436	705	1.60
	0.4	4307	751	1.71
	0.6	4196	790	1.80
	0.8	4040	847	1.93
	1.0	3887	903	2.05
	1.2	3782	940	2.1
	1.4	3664	982	2.2
T7	0.2	4747	741	1.90
	0.4	4634	783	2.00
	0.6	4527	824	2.11
	0.8	4389	870	2.23
	1.0	4266	906	2.32
	1.2	4139	956	2.45
	1.4	3996	1010	2.59
T8	0.2	4436	705	1.60
	0.4	4307	751	1.71
	0.6	4196	790	1.80
	0.8	4040	847	1.93
	1.0	3887	903	2.05
	1.2	3782	940	2.1
	1.4	3664	982	2.2
T9	0.2	4546	717	1.71
	0.4	4425	761	1.81
	0.6	4314	803	1.91
	0.8	4170	853	2.03
	1.0	4039	909	2.16
	1.2	3918	943	2.24
	1.4	3784	992	2.36
T10	0.2	4747	741	1.90
	0.4	4634	783	2.00
	0.6	4527	824	2.11
	0.8	4389	870	2.23
	1.0	4266	906	2.32
	1.2	4139	956	2.45
	1.4	3996	1010	2.59

Note:

- Taps T1 and T2 are for first stage of cooling only. Taps T6 and T7 are for first stage of heating only. Refer to page 11 for speed tap selection.
- Shaded area are not recommended for cooling or heating operation.
- Airflow table includes resistance for base unit only with 2" clean air filters in place.
  Any Additional air resistance caused by factory or field installed options or accessories must be added to the ESP in order to select the correct speed tap.

APPENDIX A BLOWER PERFORMANCE TABLES - AC

10 Ton Cooler

High Static Direct Drive

Models: DHC1203W, DHC1204W, DHC1207W

Down Flow				
Speed Tap	ESP	CFM	RPM	BHP
T1	0.2	2217	420	0.32
	0.4	2010	507	0.38
	0.6	-	-	-
	0.8	-	-	-
	1.0	-	-	-
	1.2	-	-	-
	1.4	-	-	-
	1.6	-	-	-
	1.8	-	-	-
	2.0	-	-	-
T2	0.2	4204	653	1.32
	0.4	4062	702	1.42
	0.6	3926	748	1.51
	0.8	3806	796	1.61
	1.0	3694	842	1.70
	1.2	3584	891	1.80
	1.4	3484	938	1.90
	1.6	3082	1022	2.07
	1.8	2824	1083	2.19
	2.0	2658	1111	2.25
T3	0.2	3702	596	0.97
	0.4	3587	644	1.05
	0.6	3402	702	1.14
	0.8	3280	751	1.23
	1.0	3122	806	1.31
	1.2	-	-	-
	1.4	-	-	-
	1.6	-	-	-
	1.8	-	-	-
	2.0	-	-	-
T4	0.2	4851	729	1.91
	0.4	4729	773	2.02
	0.6	4600	817	2.14
	0.8	4498	858	2.25
	1.0	4390	897	2.35
	1.2	4272	939	2.46
	1.4	4161	979	2.56
	1.6	4075	1015	2.66
	1.8	3990	1049	2.75
	2.0	3874	1073	2.81
T5	0.2	-	-	-
	0.4	4903	793	2.21
	0.6	4772	838	2.33
	0.8	4671	875	2.44
	1.0	4564	913	2.54
	1.2	4448	954	2.66
	1.4	4348	990	2.76
	1.6	4233	1030	2.87
	1.8	4121	1070	2.98
	2.0	4030	1100	3.06

Horizontal Flow				
Speed Tap	ESP	CFM	RPM	BHP
T1	0.2	2246	427	0.32
	0.4	1986	518	0.39
	0.6	-	-	-
	0.8	-	-	-
	1.0	-	-	-
	1.2	-	-	-
	1.4	-	-	-
	1.6	-	-	-
	1.8	-	-	-
	2.0	-	-	-
T2	0.2	4141	671	1.36
	0.4	4026	717	1.45
	0.6	3890	764	1.55
	0.8	3745	820	1.66
	1.0	3581	878	1.78
	1.2	3438	936	1.89
	1.4	3270	980	1.98
	1.6	2965	1051	2.13
	1.8	2752	1096	2.22
	2.0	2646	1123	2.27
T3	0.2	3704	604	0.99
	0.4	3577	658	1.07
	0.6	3388	720	1.17
	0.8	3250	770	1.26
	1.0	3077	824	1.34
	1.2	-	-	-
	1.4	-	-	-
	1.6	-	-	-
	1.8	-	-	-
	2.0	-	-	-
T4	0.2	4807	748	1.96
	0.4	4688	791	2.07
	0.6	4585	829	2.17
	0.8	4435	878	2.30
	1.0	4325	936	2.45
	1.2	4203	964	2.52
	1.4	4054	1015	2.66
	1.6	3972	1042	2.73
	1.8	3862	1076	2.82
	2.0	3754	1105	2.89
T5	0.2	4987	771	2.15
	0.4	4865	814	2.27
	0.6	4771	846	2.36
	0.8	4604	906	2.52
	1.0	4448	959	2.67
	1.2	4356	990	2.76
	1.4	4235	1030	2.87
	1.6	4121	1066	2.97
	1.8	4022	1100	3.06
	2.0	3896	1134	3.16

Down Flow				
Speed Tap	ESP	CFM	RPM	BHP
T6	0.2	4794	723	1.85
	0.4	4672	767	1.96
	0.6	4545	810	2.07
	0.8	4443	852	2.18
	1.0	4332	891	2.28
	1.2	4215	933	2.39
	1.4	4100	975	2.50
	1.6	3987	1011	2.59
	1.8	3894	1048	2.68
	2.0	3773	1075	2.75
T7	0.2	-	-	-
	0.4	4903	793	2.21
	0.6	4772	838	2.33
	0.8	4671	875	2.44
	1.0	4564	913	2.54
	1.2	4448	954	2.66
	1.4	4348	990	2.76
	1.6	4233	1030	2.87
	1.8	4121	1070	2.98
	2.0	4030	1100	3.06
T8	0.2	4794	723	1.85
	0.4	4672	767	1.96
	0.6	4545	810	2.07
	0.8	4443	852	2.18
	1.0	4332	891	2.28
	1.2	4215	933	2.39
	1.4	4100	975	2.50
	1.6	3987	1011	2.59
	1.8	3894	1048	2.68
	2.0	3773	1075	2.75
T9	0.2	4851	729	1.91
	0.4	4729	773	2.02
	0.6	4600	817	2.14
	0.8	4498	858	2.25
	1.0	4390	897	2.35
	1.2	4272	939	2.46
	1.4	4161	979	2.56
	1.6	4075	1015	2.66
	1.8	3990	1049	2.75
	2.0	3874	1073	2.81
T10	0.2	-	-	-
	0.4	4903	793	2.21
	0.6	4772	838	2.33
	0.8	4671	875	2.44
	1.0	4564	913	2.54
	1.2	4448	954	2.66
	1.4	4348	990	2.76
	1.6	4233	1030	2.87
	1.8	4121	1070	2.98
	2.0	4030	1100	3.06

Horizontal Flow				
Speed Tap	ESP	CFM	RPM	BHP
T6	0.2	4747	741	1.90
	0.4	4634	783	2.00
	0.6	4527	824	2.11
	0.8	4389	870	2.23
	1.0	4266	926	2.37
	1.2	4139	956	2.45
	1.4	3996	1010	2.59
	1.6	3885	1042	2.67
	1.8	3762	1083	2.77
	2.0	3659	1112	2.85
T7	0.2	4987	771	2.15
	0.4	4865	814	2.27
	0.6	4771	846	2.36
	0.8	4604	906	2.52
	1.0	4448	959	2.67
	1.2	4356	990	2.76
	1.4	4235	1030	2.87
	1.6	4121	1066	2.97
	1.8	4022	1100	3.06
	2.0	3896	1134	3.16
T8	0.2	4747	741	1.90
	0.4	4634	783	2.00
	0.6	4527	824	2.11
	0.8	4389	870	2.23
	1.0	4266	926	2.37
	1.2	4139	956	2.45
	1.4	3996	1010	2.59
	1.6	3885	1042	2.67
	1.8	3762	1083	2.77
	2.0	3659	1112	2.85
T9	0.2	4807	748	1.96
	0.4	4688	791	2.07
	0.6	4585	829	2.17
	0.8	4435	878	2.30
	1.0	4325	936	2.45
	1.2	4203	964	2.52
	1.4	4054	1015	2.66
	1.6	3972	1042	2.73
	1.8	3862	1076	2.82
	2.0	3754	1105	2.89
T10	0.2	4987	771	2.15
	0.4	4865	814	2.27
	0.6	4771	846	2.36
	0.8	4604	906	2.52
	1.0	4448	959	2.67
	1.2	4356	990	2.76
	1.4	4235	1030	2.87
	1.6	4121	1066	2.97
	1.8	4022	1100	3.06
	2.0	3896	1134	3.16

Note:

- Taps T1 and T2 are for first stage of cooling only. Taps T6 and T7 are for first stage of heating only. Refer to page 11 for speed tap selection.
- Shaded area are not recommended for cooling or heating operation.
- Airflow table includes resistance for base unit only with 2" clean air filters in place.
  Any Additional air resistance caused by factory or field installed options or accessories must be added to the ESP in order to select the correct speed tap.

APPENDIX A BLOWER PERFORMANCE TABLES - AC

12.5 Ton Cooler

Standard Static Direct Drive

Models: DHC1503D, DHC1504D, DHC1507D

Down Flow					Horizontal Flow				
Speed Tap	ESP	CFM	RPM	BHP	Speed Tap	ESP	CFM	RPM	BHP
T1	0.2	2820	480	0.41	T1	0.2	2620	509	0.44
	0.4	-	-	-		0.4	-	-	-
	0.6	-	-	-		0.6	-	-	-
	0.8	-	-	-		0.8	-	-	-
T2	0.2	3608	530	0.66	T2	0.2	3256	567	0.71
	0.4	3304	619	0.77		0.4	3076	640	0.80
	0.6	2987	710	0.89		0.6	2960	682	0.85
	0.8	2559	808	1.01		0.8	2616	766	0.96
T3	0.2	4415	602	1.15	T3	0.2	4179	689	1.32
	0.4	4241	672	1.29		0.4	4042	731	1.40
	0.6	4013	758	1.45		0.6	3895	782	1.50
	0.8	3811	825	1.58		0.8	3754	822	1.58
T4	0.2	5156	650	1.62	T4	0.2	4840	747	1.86
	0.4	4977	713	1.78		0.4	4688	805	2.00
	0.6	4785	780	1.94		0.6	4591	841	2.09
	0.8	4580	856	2.13		0.8	4461	885	2.20
T5	0.2	5420	667	1.84	T5	0.2	5098	774	2.13
	0.4	5273	730	2.01		0.4	4936	831	2.29
	0.6	5092	804	2.21		0.6	4835	867	2.39
	0.8	4863	865	2.38		0.8	4725	908	2.50
T6	0.2	4415	602	1.15	T6	0.2	4179	689	1.32
	0.4	4241	672	1.29		0.4	4042	731	1.40
	0.6	4013	758	1.45		0.6	3895	782	1.50
	0.8	3811	825	1.58		0.8	3754	822	1.58
T7	0.2	4914	644	1.47	T7	0.2	4614	734	1.68
	0.4	4736	705	1.61		0.4	4501	781	1.79
	0.6	4509	766	1.75		0.6	4389	820	1.87
	0.8	4284	846	1.93		0.8	4262	865	1.98
T8	0.2	4415	602	1.15	T8	0.2	4179	689	1.32
	0.4	4241	672	1.29		0.4	4042	731	1.40
	0.6	4013	758	1.45		0.6	3895	782	1.50
	0.8	3811	825	1.58		0.8	3754	822	1.58
T9	0.2	4623	623	1.30	T9	0.2	4418	715	1.50
	0.4	4457	699	1.46		0.4	4294	755	1.58
	0.6	4242	772	1.62		0.6	4170	800	1.68
	0.8	4029	837	1.75		0.8	4026	841	1.76
T10	0.2	4914	644	1.47	T10	0.2	4614	734	1.68
	0.4	4736	705	1.61		0.4	4501	781	1.79
	0.6	4509	766	1.75		0.6	4389	820	1.87
	0.8	4284	846	1.93		0.8	4262	865	1.98

12.5 Ton Cooler

Medium Static Direct Drive

Models: DHC1503L, DHC1504L, DHC1507L

Down Flow					Horizontal Flow				
Speed Tap	ESP	CFM	RPM	BHP	Speed Tap	ESP	CFM	RPM	BHP
T1	0.2	2820	480	0.41	T1	0.2	2620	509	0.44
	0.4	-	-	-		0.4	-	-	-
	0.6	-	-	-		0.6	-	-	-
	0.8	-	-	-		0.8	-	-	-
	1.0	-	-	-		1.0	-	-	-
	1.2	-	-	-		1.2	-	-	-
	1.4	-	-	-		1.4	-	-	-
T2	0.2	4298	596	1.09	T2	0.2	4044	674	1.23
	0.4	4122	663	1.21		0.4	3891	719	1.32
	0.6	3899	755	1.38		0.6	3736	773	1.41
	0.8	3711	820	1.50		0.8	3589	813	1.49
	1.0	3488	886	1.62		1.0	3448	850	1.56
	1.2	2970	1010	1.85		1.2	3310	891	1.63
	1.4	2808	1058	1.94		1.4	3162	937	1.71
T3	0.2	4415	602	1.15	T3	0.2	4179	689	1.32
	0.4	4241	672	1.29		0.4	4042	731	1.40
	0.6	4013	758	1.45		0.6	3895	782	1.50
	0.8	3811	825	1.58		0.8	3754	822	1.58
	1.0	-	-	-		1.0	-	-	-
	1.2	-	-	-		1.2	-	-	-
	1.4	-	-	-		1.4	-	-	-
T4	0.2	5156	650	1.62	T4	0.2	4840	747	1.86
	0.4	4977	713	1.78		0.4	4688	805	2.00
	0.6	4785	780	1.94		0.6	4591	841	2.09
	0.8	4580	856	2.13		0.8	4461	885	2.20
	1.0	4342	921	2.29		1.0	4342	925	2.30
	1.2	4113	981	2.44		1.2	4235	955	2.38
	1.4	3884	1037	2.58		1.4	4104	992	2.47
T5	0.2	5420	667	1.84	T5	0.2	5098	774	2.13
	0.4	5273	730	2.01		0.4	4936	831	2.29
	0.6	5092	804	2.21		0.6	4835	867	2.39
	0.8	4863	865	2.38		0.8	4725	908	2.50
	1.0	4651	936	2.58		1.0	4607	954	2.63
	1.2	4429	1001	2.76		1.2	4489	983	2.71
	1.4	4197	1020	2.81		1.4	4386	1016	2.80
T6	0.2	4914	644	1.47	T6	0.2	4614	734	1.68
	0.4	4736	705	1.61		0.4	4501	781	1.79
	0.6	4509	766	1.75		0.6	4389	820	1.87
	0.8	4284	846	1.93		0.8	4262	865	1.98
	1.0	4076	915	2.1		1.0	4139	903	2.06
	1.2	3843	970	2.22		1.2	4017	938	2.1
	1.4	-	-	-		1.4	3884	973	2.2
T7	0.2	5420	667	1.84	T7	0.2	5098	774	2.13
	0.4	5273	730	2.01		0.4	4936	831	2.29
	0.6	5092	804	2.21		0.6	4835	867	2.39
	0.8	4863	865	2.38		0.8	4725	908	2.50
	1.0	4651	936	2.58		1.0	4607	954	2.63
	1.2	4429	1001	2.76		1.2	4489	983	2.71
	1.4	4197	1020	2.81		1.4	4386	1016	2.80
T8	0.2	4914	644	1.47	T8	0.2	4614	734	1.68
	0.4	4736	705	1.61		0.4	4501	781	1.79
	0.6	4509	766	1.75		0.6	4389	820	1.87
	0.8	4284	846	1.93		0.8	4262	865	1.98
	1.0	4076	915	2.1		1.0	4139	903	2.06
	1.2	3843	970	2.22		1.2	4017	938	2.1
	1.4	-	-	-		1.4	3884	973	2.2
T9	0.2	5156	650	1.62	T9	0.2	4840	747	1.86
	0.4	4977	713	1.78		0.4	4688	805	2.00
	0.6	4785	780	1.94		0.6	4591	841	2.09
	0.8	4580	856	2.13		0.8	4461	885	2.20
	1.0	4342	921	2.29		1.0	4342	925	2.30
	1.2	4113	981	2.44		1.2	4235	955	2.38
	1.4	3884	1037	2.58		1.4	4104	992	2.47
T10	0.2	5420	667	1.84	T10	0.2	5098	774	2.13
	0.4	5273	730	2.01		0.4	4936	831	2.29
	0.6	5092	804	2.21		0.6	4835	867	2.39
	0.8	4863	865	2.38		0.8	4725	908	2.50
	1.0	4651	936	2.58		1.0	4607	954	2.63
	1.2	4429	1001	2.76		1.2	4489	983	2.71
	1.4	4197	1020	2.81		1.4	4386	1016	2.80

Note:

- Taps T1 and T2 are for first stage of cooling only. Taps T6 and T7 are for first stage of heating only. Refer to page 11 for speed tap selection.
- Shaded area are not recommended for cooling or heating operation.
- Airflow table includes resistance for base unit only with 2" clean air filters in place.
  Any Additional air resistance caused by factory or field installed options or accessories must be added to the ESP in order to select the correct speed tap.

APPENDIX A BLOWER PERFORMANCE TABLES - AC

12.5 Ton Cooler

High Static Direct Drive

Models: DHC1503W, DHC1504W, DHC1507W

Down Flow					Horizontal Flow				
Speed Tap	ESP	CFM	RPM	BHP	Speed Tap	ESP	CFM	RPM	BHP
T1	0.2	2504	531	0.46	T1	0.2	2512	508	0.44
	0.4	-	-	-		0.4	-	-	-
	0.6	-	-	-		0.6	-	-	-
	0.8	-	-	-		0.8	-	-	-
	1.0	-	-	-		1.0	-	-	-
	1.2	-	-	-		1.2	-	-	-
	1.4	-	-	-		1.4	-	-	-
	1.6	-	-	-		1.6	-	-	-
	1.8	-	-	-		1.8	-	-	-
	2.0	-	-	-		2.0	-	-	-
T2	0.2	4164	759	1.56	T2	0.2	4186	706	1.45
	0.4	4107	794	1.64		0.4	4079	753	1.55
	0.6	3980	840	1.73		0.6	3981	796	1.64
	0.8	3882	882	1.82		0.8	3854	847	1.74
	1.0	3738	931	1.92		1.0	3727	897	1.85
	1.2	3438	1005	2.07		1.2	3627	938	1.93
	1.4	3189	1069	2.20		1.4	3517	982	2.02
	1.6	3026	1108	2.28		1.6	3262	1043	2.15
	1.8	2930	1129	2.33		1.8	2915	1118	2.30
	2.0	2843	1155	2.38		2.0	2812	1145	2.36
T3	0.2	4164	759	1.56	T3	0.2	4186	706	1.45
	0.4	4107	794	1.64		0.4	4079	753	1.55
	0.6	3980	840	1.73		0.6	3981	796	1.64
	0.8	3882	882	1.82		0.8	3854	847	1.74
	1.0	-	-	-		1.0	-	-	-
	1.2	-	-	-		1.2	-	-	-
	1.4	-	-	-		1.4	-	-	-
	1.6	-	-	-		1.6	-	-	-
	1.8	-	-	-		1.8	-	-	-
	2.0	-	-	-		2.0	-	-	-
T4	0.2	5401	945	3.38	T4	0.2	5489	873	3.12
	0.4	5314	977	3.49		0.4	5410	904	3.23
	0.6	5214	1011	3.61		0.6	5325	937	3.35
	0.8	5142	1041	3.72		0.8	5235	970	3.46
	1.0	5050	1073	3.83		1.0	5136	1004	3.59
	1.2	4952	1107	3.95		1.2	5038	1043	3.73
	1.4	4863	1139	4.07		1.4	4936	1083	3.87
	1.6	4742	1175	4.20		1.6	4819	1123	4.01
	1.8	4627	1210	4.32		1.8	4699	1166	4.16
	2.0	4511	1247	4.45		2.0	4595	1196	4.27
T5	0.2	5671	990	3.95	T5	0.2	5770	911	3.63
	0.4	5580	1019	4.06		0.4	5685	940	3.75
	0.6	5495	1049	4.18		0.6	5605	971	3.87
	0.8	5419	1077	4.30		0.8	5518	1001	3.99
	1.0	5345	1109	4.42		1.0	5425	1036	4.13
	1.2	5257	1139	4.54		1.2	5336	1072	4.27
	1.4	5162	1169	4.66		1.4	5235	1108	4.42
	1.6	5060	1205	4.81		1.6	5113	1151	4.59
	1.8	4938	1240	4.95		1.8	4977	1194	4.76
	2.0	4824	1273	5.08		2.0	4871	1221	4.87

Down Flow					Horizontal Flow				
Speed Tap	ESP	CFM	RPM	BHP	Speed Tap	ESP	CFM	RPM	BHP
T6	0.2	4891	868	2.42	T6	0.2	4970	803	2.24
	0.4	4809	902	2.51		0.4	4889	840	2.34
	0.6	4718	939	2.62		0.6	4799	877	2.44
	0.8	4628	972	2.71		0.8	4702	921	2.57
	1.0	4531	1006	2.80		1.0	4614	953	2.65
	1.2	4419	1047	2.92		1.2	4492	1001	2.79
	1.4	4304	1086	3.03		1.4	4364	1053	2.93
	1.6	4186	1123	3.13		1.6	4259	1081	3.01
	1.8	4064	1157	3.22		1.8	4129	1122	3.13
	2.0	-	-	-		2.0	4011	1156	3.22
T7	0.2	5401	945	3.38	T7	0.2	5489	873	3.12
	0.4	5314	977	3.49		0.4	5410	904	3.23
	0.6	5214	1011	3.61		0.6	5325	937	3.35
	0.8	5142	1041	3.72		0.8	5235	970	3.46
	1.0	5050	1073	3.83		1.0	5136	1004	3.59
	1.2	4952	1107	3.95		1.2	5038	1043	3.73
	1.4	4863	1139	4.07		1.4	4936	1083	3.87
	1.6	4742	1175	4.20		1.6	4819	1123	4.01
	1.8	4627	1210	4.32		1.8	4699	1166	4.16
	2.0	4511	1247	4.45		2.0	4595	1196	4.27
T8	0.2	4891	868	2.42	T8	0.2	4970	803	2.24
	0.4	4809	902	2.51		0.4	4889	840	2.34
	0.6	4718	939	2.62		0.6	4799	877	2.44
	0.8	4628	972	2.71		0.8	4702	921	2.57
	1.0	4531	1006	2.80		1.0	4614	953	2.65
	1.2	4419	1047	2.92		1.2	4492	1001	2.79
	1.4	4304	1086	3.03		1.4	4364	1053	2.93
	1.6	4186	1123	3.13		1.6	4259	1081	3.01
	1.8	4064	1157	3.22		1.8	4129	1122	3.13
	2.0	-	-	-		2.0	4011	1156	3.22
T9	0.2	5197	915	3.05	T9	0.2	5282	846	2.82
	0.4	5109	947	3.16		0.4	5199	847	2.82
	0.6	5007	980	3.27		0.6	5113	870	2.90
	0.8	4933	1014	3.38		0.8	5017	915	3.05
	1.0	4845	1047	3.49		1.0	4913	982	3.27
	1.2	4737	1083	3.61		1.2	4817	1026	3.42
	1.4	4638	1118	3.73		1.4	4716	1067	3.56
	1.6	4520	1153	3.84		1.6	4598	1108	3.69
	1.8	4398	1191	3.97		1.8	4479	1147	3.82
	2.0	4285	1222	4.07		2.0	4360	1179	3.93
T10	0.2	5401	945	3.38	T10	0.2	5489	873	3.12
	0.4	5314	977	3.49		0.4	5410	904	3.23
	0.6	5214	1011	3.61		0.6	5325	937	3.35
	0.8	5142	1041	3.72		0.8	5235	970	3.46
	1.0	5050	1073	3.83		1.0	5136	1004	3.59
	1.2	4952	1107	3.95		1.2	5038	1043	3.73
	1.4	4863	1139	4.07		1.4	4936	1083	3.87
	1.6	4742	1175	4.20		1.6	4819	1123	4.01
	1.8	4627	1210	4.32		1.8	4699	1166	4.16
	2.0	4511	1247	4.45		2.0	4595	1196	4.27

Note:

- Taps T1 and T2 are for first stage of cooling only. Taps T6 and T7 are for first stage of heating only. Refer to page 11 for speed tap selection.
- Shaded area are not recommended for cooling or heating operation.
- Airflow table includes resistance for base unit only with 2" clean air filters in place.
  Any Additional air resistance caused by factory or field installed options or accessories must be added to the ESP in order to select the correct speed tap.

APPENDIX A BLOWER PERFORMANCE DATA

The following tables are provided for reference only to show DDC control settings relationship to unit CFM. Blower speed settings must be set to meet the minimum required CFM of their stages.

7.5 TON
MODELS : DHC0903D, DHC0904D & DHC0907D WITH DDC CONTROLS
STANDARD STATIC TO 1.7 HP (0.2 ~ 0.8 ESP)
DOWN FLOW

CFM	0.2			0.4			0.6			0.8			1.0		
	RPM	DDC %	BHP	RPM	DDC %	BHP	RPM	DDC %	BHP	RPM	DDC %	BHP	RPM	DDC %	BHP
1400										782	22	0.49	-	-	-
1600				647	20	0.37	717	22	0.43	801	25	0.57	-	-	-
1800	555	20	0.33	671	23	0.44	740	25	0.50	820	28	0.65	-	-	-
2000	587	23	0.40	696	26	0.51	763	28	0.57	839	30	0.75	-	-	-
2200	619	27	0.48	720	29	0.60	786	31	0.66	858	33	0.87	-	-	-
2400	651	30	0.57	745	32	0.71	809	34	0.76	877	36	1.00	-	-	-
2600	683	33	0.69	769	35	0.83	832	37	0.87	896	39	1.15	-	-	-
2800	715	36	0.82	794	38	0.98	855	40	1.00	915	42	1.32	-	-	-
3000	747	39	0.99	818	41	1.14	878	43	1.15	934	45	1.52	-	-	-
3200	779	43	1.18	843	44	1.34	901	46	1.33	953	47	1.74	-	-	-
3400	810	46	1.41	867	47	1.58	924	48	1.53				-	-	-
3600	842	48	1.69										-	-	-

Shaded area indicates air flow below 2250 SCFM (300 SCFM/ton) that is not recommended for High Stage cooling or heating. Valid motor operating range for DDC% setting is 20 - 90.

HORIZONTAL FLOW

CFM	0.2			0.4			0.6			0.8			1.0		
	RPM	DDC %	BHP	RPM	DDC %	BHP	RPM	DDC %	BHP	RPM	DDC %	BHP	RPM	DDC %	BHP
1400	409	25	0.23	518	20	0.32	597	20	0.41	720	24	0.59	-	-	-
1600	440	27	0.27	542	23	0.37	619	22	0.48	733	27	0.67	-	-	-
1800	471	30	0.33	567	25	0.44	641	26	0.55	745	30	0.75	-	-	-
2000	502	32	0.39	591	28	0.51	664	29	0.63	758	32	0.85	-	-	-
2200	533	35	0.47	616	31	0.60	686	32	0.72	771	35	0.96	-	-	-
2400	564	37	0.56	640	34	0.71	708	35	0.83	784	38	1.08	-	-	-
2600	595	39	0.67	665	37	0.83	730	38	0.96	797	40	1.22	-	-	-
2800	626	42	0.81	690	39	0.97	752	41	1.10	809	43	1.37	-	-	-
3000	657	44	0.97	714	42	1.14	774	44	1.27	822	46	1.55	-	-	-
3200	688	47	1.16	739	45	1.34	796	47	1.46	835	48	1.75	-	-	-
3400	718	48	1.38	763	48	1.57							-	-	-
3600													-	-	-

Shaded area indicates air flow below 2250 SCFM (300 SCFM/ton) that is not recommended for High Stage cooling or heating. Valid motor operating range for DDC% setting is 20 - 90.

APPENDIX A BLOWER PERFORMANCE DATA

7.5 TON
MODELS : DHC0903L, DHC0904L & DHC0907L WITH DDC CONTROLS
MEDIUM STATIC TO 2.4 HP (0.2 ~ 1.4 ESP)
DOWN FLOW

CFM	0.2			0.4			0.6			0.8			1.0		
	RPM	DDC %	BHP	RPM	DDC %	BHP	RPM	DDC %	BHP	RPM	DDC %	BHP	RPM	DDC %	BHP
1400	486	12	0.24	594	16	0.31	691	18	0.38	782	21	0.49	821	16	0.58
1600	519	16	0.28	622	19	0.36	715	22	0.43	802	24	0.57	843	20	0.66
1800	553	19	0.34	651	22	0.42	740	25	0.50	822	27	0.65	865	24	0.74
2000	586	23	0.41	679	26	0.50	764	28	0.57	843	30	0.75	887	28	0.84
2200	619	26	0.49	708	29	0.58	788	31	0.66	863	34	0.86	909	32	0.94
2400	652	30	0.58	736	32	0.69	813	35	0.76	883	37	0.99	931	35	1.06
2600	685	33	0.70	764	36	0.80	837	38	0.87	903	40	1.14	953	39	1.20
2800	719	37	0.84	793	39	0.94	861	41	1.00	923	43	1.31	975	43	1.35
3000	752	40	1.00	821	43	1.11	886	44	1.15	943	46	1.51	997	47	1.52
3200	785	44	1.20	849	46	1.30	910	48	1.33	964	49	1.73	1019	51	1.72
3400	818	47	1.43	878	49	1.53	935	51	1.53	984	52	1.99	1041	55	1.94
3600	852	51	1.72	906	53	1.79	959	54	1.76	1004	55	2.29	1063	59	2.18
3800	885	54	2.05	935	56	2.10	983	57	2.02						
CFM	1.2			1.4			1.6			1.8			2.0		
	RPM	DDC %	BHP	RPM	DDC %	BHP	RPM	DDC %	BHP	RPM	DDC %	BHP	RPM	DDC %	BHP
1400	919	23	0.76	1040	28	1.00	-	-	-	-	-	-	-	-	-
1600	936	26	0.84	1048	31	1.08	-	-	-	-	-	-	-	-	-
1800	952	29	0.93	1056	34	1.17	-	-	-	-	-	-	-	-	-
2000	969	33	1.02	1064	37	1.27	-	-	-	-	-	-	-	-	-
2200	986	36	1.13	1071	40	1.38	-	-	-	-	-	-	-	-	-
2400	1002	39	1.25	1079	43	1.49	-	-	-	-	-	-	-	-	-
2600	1019	43	1.38	1087	46	1.62	-	-	-	-	-	-	-	-	-
2800	1035	46	1.53	1095	49	1.75	-	-	-	-	-	-	-	-	-
3000	1052	49	1.69	1102	52	1.90	-	-	-	-	-	-	-	-	-
3200	1068	53	1.86	1110	55	2.05	-	-	-	-	-	-	-	-	-
3400	1085	56	2.06	1118	57	2.22	-	-	-	-	-	-	-	-	-
3600	1101	60	2.28	1126	60	2.41	-	-	-	-	-	-	-	-	-
3800							-	-	-	-	-	-	-	-	-

Shaded area indicates air flow below 2250 SCFM (300 SCFM/ton) that is not recommended for High Stage cooling or heating. Valid motor operating range for DDC% setting is 20 - 90.

HORIZONTAL FLOW

CFM	0.2			0.4			0.6			0.8			1.0		
	RPM	DDC %	BHP	RPM	DDC %	BHP	RPM	DDC %	BHP	RPM	DDC %	BHP	RPM	DDC %	BHP
1400	421	16	0.20	507	19	0.31	560	16	0.39	652	20	0.53	736	24	0.61
1600	450	19	0.24	535	22	0.36	587	20	0.45	675	24	0.60	755	27	0.67
1800	478	22	0.28	562	25	0.42	615	24	0.50	697	27	0.67	775	30	0.74
2000	506	25	0.33	590	28	0.50	643	27	0.57	720	30	0.76	794	33	0.82
2200	534	29	0.39	618	31	0.58	670	31	0.64	742	34	0.85	813	36	0.90
2400	563	32	0.46	645	34	0.69	698	34	0.72	765	37	0.96	833	40	1.00
2600	591	35	0.53	673	38	0.81	725	38	0.81	788	40	1.09	852	43	1.10
2800	619	38	0.63	701	41	0.94	753	41	0.91	810	43	1.22	872	46	1.22
3000	647	41	0.74	728	44	1.11	780	45	1.03	833	47	1.38	891	49	1.35
3200	675	45	0.86	756	47	1.30	808	48	1.16	856	50	1.56	910	52	1.49
3400	704	48	1.01	783	50	1.53	836	52	1.31	878	53	1.76	930	56	1.65
3600	732	51	1.19	811	53	1.79	863	56	1.48	901	57	1.98	949	59	1.82
3800	760	54	1.40	839	56	2.10	891	59	1.67	923	60	2.23	968	62	2.01
CFM	1.2			1.4			1.6			1.8			2.0		
	RPM	DDC %	BHP	RPM	DDC %	BHP	RPM	DDC %	BHP	RPM	DDC %	BHP	RPM	DDC %	BHP
1400	862	31	0.92	957	35	1.09	-	-	-	-	-	-	-	-	-
1600	872	33	0.99	960	37	1.15	-	-	-	-	-	-	-	-	-
1800	882	36	1.08	964	39	1.22	-	-	-	-	-	-	-	-	-
2000	892	38	1.17	967	41	1.30	-	-	-	-	-	-	-	-	-
2200	902	41	1.26	971	43	1.38	-	-	-	-	-	-	-	-	-
2400	911	43	1.37	974	46	1.46	-	-	-	-	-	-	-	-	-
2600	921	46	1.48	978	48	1.56	-	-	-	-	-	-	-	-	-
2800	931	48	1.60	981	50	1.65	-	-	-	-	-	-	-	-	-
3000	941	51	1.74	985	52	1.75	-	-	-	-	-	-	-	-	-
3200	951	53	1.88	988	55	1.86	-	-	-	-	-	-	-	-	-
3400	961	56	2.04	992	57	1.98	-	-	-	-	-	-	-	-	-
3600	971	59	2.21	995	59	2.10	-	-	-	-	-	-	-	-	-
3800	980	61	2.39	999	61	2.23	-	-	-	-	-	-	-	-	-

Shaded area indicates air flow below 2250 SCFM (300 SCFM/ton) that is not recommended for High Stage cooling or heating.
Valid motor operating range for DDC% setting is 20 - 90.

APPENDIX A BLOWER PERFORMANCE DATA

7.5 TON
MODELS : DHC0903W,DHC0904W & DHC0907W WITH DDC CONTROLS
HIGH STATIC TO 3.5 HP (0.2 ~ 2.0 ESP)
DOWN FLOW

CFM	0.2			0.4			0.6			0.8			1.0		
	RPM	DDC %	BHP	RPM	DDC %	BHP	RPM	DDC %	BHP	RPM	DDC %	BHP	RPM	DDC %	BHP
1800	543	22	0.29	651	24	0.42	743	26	0.53	820	27	0.67	863	27	0.73
2000	580	24	0.35	680	27	0.49	766	29	0.61	842	30	0.77	885	30	0.82
2200	616	27	0.42	708	29	0.58	789	31	0.71	863	33	0.88	907	33	0.93
2400	652	30	0.50	736	32	0.68	812	34	0.81	884	35	1.01	929	36	1.05
2600	688	33	0.60	764	34	0.80	835	36	0.93	906	38	1.17	951	39	1.18
2800	725	35	0.71	792	37	0.94	858	38	1.07	927	40	1.34	974	41	1.33
3000	761	38	0.86	820	39	1.10	881	41	1.24	948	43	1.54	996	44	1.50
3200	797	41	1.02	848	42	1.29	904	43	1.42	970	46	1.77	1018	47	1.69
3400	833	44	1.23	876	45	1.52	927	46	1.63	991	48	2.04	1040	50	1.91
3600	870	47	1.47	904	47	1.78	950	48	1.88	1012	51	2.35	1062	52	2.15
3800	906	49	1.76	933	50	2.09	974	51	2.16	1033	53	2.70	1084	55	2.43
CFM	1.2			1.4			1.6			1.8			2.0		
	RPM	DDC %	BHP	RPM	DDC %	BHP	RPM	DDC %	BHP	RPM	DDC %	BHP	RPM	DDC %	BHP
1800	948	31	0.90	1059	32	1.10	1137	35	1.48	1180	37	1.59	1217	39	1.54
2000	965	34	1.00	1068	35	1.19	1141	38	1.60	1185	39	1.72	1232	41	1.67
2200	981	36	1.10	1077	37	1.29	1145	40	1.73	1190	41	1.87	1246	43	1.81
2400	998	39	1.22	1087	39	1.40	1149	42	1.88	1195	43	2.02	1260	45	1.96
2600	1014	41	1.35	1096	42	1.52	1154	44	2.03	1200	45	2.19	1274	47	2.12
2800	1031	43	1.49	1105	44	1.64	1158	46	2.20	1205	48	2.37	1288	49	2.30
3000	1047	46	1.64	1115	47	1.78	1162	48	2.39	1210	50	2.57	1302	51	2.49
3200	1064	48	1.82	1124	49	1.93	1166	51	2.59	1215	52	2.78	1316	53	2.69
3400	1080	51	2.01	1133	52	2.09	1171	53	2.80	1220	54	3.02	1331	55	2.92
3600	1097	53	2.22	1143	54	2.26	1175	55	3.03	1225	56	3.27	1345	57	3.16
3800	1113	56	2.45	1152	56	2.45	1179	57	3.29	1230	59	3.50	1359	59	3.43

Shaded area indicates air flow below 2250 SCFM (300 SCFM/ton) that is not recommended for High Stage cooling or heating. Valid motor operating range for DDC% setting is 20 - 90.

HORIZONTAL FLOW

CFM	0.2			0.4			0.6			0.8			1.0		
	RPM	DDC %	BHP	RPM	DDC %	BHP	RPM	DDC %	BHP	RPM	DDC %	BHP	RPM	DDC %	BHP
1800	466	22	0.29	567	27	0.42	632	29	0.51	673	28	0.65	762	30	0.75
2000	499	24	0.35	595	29	0.49	657	32	0.58	700	30	0.75	784	33	0.85
2200	532	27	0.42	622	31	0.58	681	34	0.65	727	33	0.87	806	35	0.96
2400	565	29	0.50	650	34	0.68	706	36	0.73	754	36	1.00	829	38	1.08
2600	598	32	0.60	677	36	0.80	731	38	0.82	781	38	1.15	851	40	1.21
2800	630	34	0.71	705	38	0.93	756	40	0.93	809	41	1.32	873	43	1.37
3000	663	37	0.85	732	41	1.10	780	42	1.05	836	44	1.52	895	45	1.54
3200	696	40	1.02	760	43	1.29	805	44	1.18	863	46	1.74	918	48	1.74
3400	729	42	1.22	788	45	1.51	830	47	1.33	890	49	2.01	940	50	1.96
3600	762	45	1.47	815	47	1.77	854	49	1.50	917	52	2.31	962	53	2.21
3800	795	47	1.75	843	50	2.08	879	51	1.69	945	54	2.65	984	55	2.50
CFM	1.2			1.4			1.6			1.8			2.0		
	RPM	DDC %	BHP	RPM	DDC %	BHP	RPM	DDC %	BHP	RPM	DDC %	BHP	RPM	DDC %	BHP
1800	843	32	0.83	968	36	1.27	1025	38	1.51	1066	39	1.63	1112	40	1.79
2000	860	35	0.92	974	38	1.37	1029	40	1.63	1070	41	1.76	1118	43	1.94
2200	877	37	1.02	980	40	1.49	1033	42	1.77	1074	43	1.91	1124	45	2.10
2400	895	40	1.12	986	42	1.61	1037	44	1.92	1079	45	2.07	1130	47	2.27
2600	912	42	1.24	992	44	1.74	1041	46	2.08	1083	47	2.24	1135	49	2.46
2800	929	44	1.37	998	46	1.89	1045	48	2.25	1087	49	2.43	1141	51	2.67
3000	947	47	1.52	1004	48	2.05	1048	50	2.44	1092	51	2.63	1147	53	2.89
3200	964	49	1.67	1009	51	2.22	1052	52	2.64	1096	53	2.85	1153	55	3.13
3400	981	52	1.85	1015	53	2.40	1056	54	2.86	1100	55	3.09	1159	57	3.39
3600	999	54	2.05	1021	55	2.60	1060	56	3.10	1105	57	3.35			
3800	1016	56	2.26	1027	57	2.82	1064	58	3.36						

Shaded area indicates air flow below 2250 SCFM (300 SCFM/ton) that is not recommended for High Stage cooling or heating. Valid motor operating range for DDC% setting is 20 - 90.

APPENDIX A BLOWER PERFORMANCE DATA

8.5 TON
MODELS : DHC1023D,DHC1024D & DHC1027D WITH DDC CONTROL
STANDARD STATIC TO 2.4 HP (0.2 ~ 0.8 ESP)
DOWN FLOW

CFM	0.2			0.4			0.6			0.8			1.0		
	RPM	DDC %	BHP	RPM	DDC %	BHP	RPM	DDC %	BHP	RPM	DDC %	BHP	RPM	DDC %	BHP
1600							607	21	0.48	801	25	0.61	-	-	-
1800	424	19	0.37	515	22	0.46	625	24	0.54	820	28	0.69	-	-	-
2000	452	22	0.44	539	26	0.54	642	28	0.61	839	30	0.77	-	-	-
2200	480	26	0.53	563	29	0.63	659	31	0.68	858	33	0.87	-	-	-
2400	507	29	0.63	588	32	0.74	677	35	0.77	877	36	0.98	-	-	-
2600	535	33	0.76	612	36	0.87	694	38	0.87	896	39	1.11	-	-	-
2800	563	36	0.90	636	39	1.02	711	42	0.98	915	42	1.25	-	-	-
3000	590	40	1.08	660	42	1.20	729	45	1.10	934	45	1.41	-	-	-
3200	618	43	1.30	684	46	1.41	746	48	1.24	953	47	1.59	-	-	-
3400	646	46	1.55	708	49	1.65	763	52	1.40	972	50	1.79	-	-	-
3600	673	50	1.86	733	52	1.94	781	55	1.58	991	53	2.02	-	-	-
3800	701	53	2.23	757	56	2.28	798	59	1.78	1010	56	2.28	-	-	-

Shaded area indicates air flow below 2550 SCFM (300 SCFM/ton) that is not recommended for High Stage cooling or heating. Valid motor operating range for DDC% setting is 20 - 90.

HORIZONTAL FLOW

CFM	0.2			0.4			0.6			0.8			1.0		
	RPM	DDC %	BHP	RPM	DDC %	BHP	RPM	DDC %	BHP	RPM	DDC %	BHP	RPM	DDC %	BHP
1600										611	21	0.49	-	-	-
1800				496	21	0.34	581	22	0.47	632	24	0.56	-	-	-
2000	435	21	0.32	521	24	0.39	603	26	0.53	654	28	0.63	-	-	-
2200	464	25	0.37	546	28	0.45	626	29	0.59	675	31	0.71	-	-	-
2400	494	28	0.43	571	31	0.52	648	33	0.67	696	34	0.80	-	-	-
2600	523	32	0.51	596	35	0.60	671	36	0.75	718	38	0.90	-	-	-
2800	552	35	0.60	621	38	0.69	693	40	0.85	739	41	1.01	-	-	-
3000	581	39	0.70	646	41	0.79	715	44	0.96	760	45	1.14	-	-	-
3200	611	43	0.82	671	45	0.91	738	47	1.08	782	48	1.29	-	-	-
3400	640	46	0.97	695	48	1.05	760	51	1.22	803	51	1.45	-	-	-
3600	669	50	1.13	720	52	1.20	782	54	1.37	824	55	1.64	-	-	-
3800	699	53	1.33	745	55	1.39	805	58	1.55	846	58	1.85	-	-	-

Shaded area indicates air flow below 2550 SCFM (300 SCFM/ton) that is not recommended for High Stage cooling or heating.
Valid motor operating range for DDC% setting is 20 - 90.

APPENDIX A BLOWER PERFORMANCE DATA

8.5 TON
MODELS : DHC1023L,DHC1024L & DHC1027L WITH DDC CONTROL
MEDIUM STATIC TO 2.4 HP (0.2 ~ 1.4 ESP)
DOWN FLOW

CFM	0.2			0.4			0.6			0.8			1.0		
	RPM	DDC %	BHP	RPM	DDC %	BHP	RPM	DDC %	BHP	RPM	DDC %	BHP	RPM	DDC %	BHP
1600				491	20	0.37	586	23	0.48	642	24	0.66	736	28	0.81
1800	423	20	0.30	515	23	0.41	608	26	0.54	663	27	0.73	754	31	0.87
2000	451	23	0.35	540	26	0.47	629	30	0.61	684	31	0.80	771	35	0.95
2200	479	26	0.41	564	30	0.53	650	33	0.69	706	34	0.89	789	38	1.03
2400	507	30	0.48	589	33	0.59	672	36	0.78	727	37	0.98	806	41	1.11
2600	535	33	0.56	613	36	0.67	693	39	0.88	749	41	1.09	823	45	1.20
2800	563	36	0.66	638	39	0.75	714	42	0.99	770	44	1.20	841	48	1.30
3000	591	40	0.77	662	42	0.85	736	46	1.11	791	48	1.33	858	51	1.41
3200	619	43	0.90	686	46	0.96	757	49	1.25	813	51	1.47	875	54	1.53
3400	647	46	1.06	711	49	1.08	778	52	1.41	834	54	1.62	893	58	1.66
3600	675	50	1.25	735	52	1.22	800	55	1.59	855	58	1.79	910	61	1.80
3800	703	53	1.46	760	55	1.37	821	58	1.80	877	61	1.98	928	62	1.95
CFM	1.2			1.4			1.6			1.8			2.0		
	RPM	DDC %	BHP	RPM	DDC %	BHP	RPM	DDC %	BHP	RPM	DDC %	BHP	RPM	DDC %	BHP
1600	814	33	1.06	858	35	1.07	-	-	-	-	-	-	-	-	-
1800	828	36	1.15	873	38	1.15	-	-	-	-	-	-	-	-	-
2000	842	39	1.24	888	41	1.25	-	-	-	-	-	-	-	-	-
2200	856	42	1.35	903	44	1.35	-	-	-	-	-	-	-	-	-
2400	871	45	1.46	917	47	1.47	-	-	-	-	-	-	-	-	-
2600	885	48	1.58	932	51	1.59	-	-	-	-	-	-	-	-	-
2800	899	51	1.71	947	54	1.72	-	-	-	-	-	-	-	-	-
3000	913	54	1.86	962	57	1.87	-	-	-	-	-	-	-	-	-
3200	927	57	2.01	976	60	2.02	-	-	-	-	-	-	-	-	-
3400	941	60	2.18	991	62	2.19	-	-	-	-	-	-	-	-	-
3600	955	62	2.36				-	-	-	-	-	-	-	-	-
3800							-	-	-	-	-	-	-	-	-

Shaded area indicates air flow below 2550 SCFM (300 SCFM/ton) that is not recommended for High Stage cooling or heating. Valid motor operating range for DDC% setting is 20 - 90.

HORIZONTAL FLOW

CFM	0.2			0.4			0.6			0.8			1.0		
	RPM	DDC %	BHP	RPM	DDC %	BHP	RPM	DDC %	BHP	RPM	DDC %	BHP	RPM	DDC %	BHP
1600							576	22	0.48	624	21	0.62	717	29	0.81
1800	406	19	0.26	497	21	0.36	596	25	0.54	643	24	0.68	732	33	0.87
2000	435	22	0.30	522	25	0.41	616	28	0.61	663	28	0.76	748	37	0.95
2200	464	25	0.35	547	28	0.46	636	31	0.69	683	31	0.84	763	41	1.03
2400	493	29	0.42	572	31	0.52	656	34	0.78	703	35	0.92	778	45	1.11
2600	521	32	0.49	596	35	0.59	676	38	0.88	723	38	1.02	794	49	1.20
2800	550	36	0.57	621	38	0.66	696	41	0.99	743	41	1.13	809	52	1.30
3000	579	39	0.67	646	42	0.75	716	44	1.11	762	45	1.25	824	56	1.41
3200	608	43	0.79	671	45	0.84	736	47	1.25	782	48	1.38	840	60	1.53
3400	637	46	0.92	696	48	0.95	756	50	1.41	802	52	1.52	855	62	1.66
3600	666	50	1.08	720	52	1.07	776	54	1.59	822	55	1.68	870	68	1.80
3800	695	53	1.27	745	55	1.21	796	57	1.80	842	58	1.86	885	71	1.95
CFM	1.2			1.4			1.6			1.8			2.0		
	RPM	DDC %	BHP	RPM	DDC %	BHP	RPM	DDC %	BHP	RPM	DDC %	BHP	RPM	DDC %	BHP
1600	777	27	0.86	827	29	0.96	-	-	-	-	-	-	-	-	-
1800	790	30	0.93	839	32	1.04	-	-	-	-	-	-	-	-	-
2000	804	33	1.01	852	35	1.13	-	-	-	-	-	-	-	-	-
2200	818	36	1.09	865	38	1.22	-	-	-	-	-	-	-	-	-
2400	831	39	1.18	878	41	1.32	-	-	-	-	-	-	-	-	-
2600	845	43	1.28	890	44	1.43	-	-	-	-	-	-	-	-	-
2800	858	46	1.39	903	47	1.55	-	-	-	-	-	-	-	-	-
3000	872	49	1.51	916	51	1.68	-	-	-	-	-	-	-	-	-
3200	885	52	1.63	929	54	1.82	-	-	-	-	-	-	-	-	-
3400	899	55	1.77	941	57	1.97	-	-	-	-	-	-	-	-	-
3600	913	58	1.91	954	60	2.14	-	-	-	-	-	-	-	-	-
3800	969	61	2.07				-	-	-	-	-	-	-	-	-

Shaded area indicates air flow below 2550 SCFM (300 SCFM/ton) that is not recommended for High Stage cooling or heating. Valid motor operating range for DDC% setting is 20 - 90.

APPENDIX A BLOWER PERFORMANCE DATA

8.5 TON
MODELS : DHC1023W,DHC1024W & DHC1027W WITH DDC CONTROL
HIGH STATIC TO 3.5 HP (0.2 ~ 2.0 ESP)
DOWN FLOW

CFM	0.2			0.4			0.6			0.8			1.0		
	RPM	DDC %	BHP	RPM	DDC %	BHP	RPM	DDC %	BHP	RPM	DDC %	BHP	RPM	DDC %	BHP
1600							586	23	0.43	633	22	0.61	713	21	0.80
1800				509	23	0.37	608	26	0.48	656	25	0.68	734	25	0.89
2000	450	23	0.31	535	26	0.43	630	30	0.54	679	29	0.77	755	30	0.98
2200	478	26	0.35	560	29	0.49	652	33	0.61	702	33	0.87	776	34	1.08
2400	506	30	0.41	586	33	0.56	674	36	0.69	726	37	0.98	796	38	1.20
2600	534	33	0.47	612	36	0.65	695	40	0.78	749	41	1.10	817	42	1.32
2800	562	37	0.54	637	40	0.75	717	43	0.88	772	44	1.24	838	46	1.46
3000	590	40	0.62	663	43	0.86	739	46	0.99	796	48	1.40	859	50	1.62
3200	617	43	0.71	689	46	0.99	761	50	1.11	819	52	1.58	880	55	1.79
3400	645	47	0.82	714	50	1.14	783	53	1.26	842	56	1.78	901	59	1.98
3600	673	50	0.94	740	53	1.31	805	57	1.42	866	59	2.01	921	63	2.18
3800	701	54	1.08	766	56	1.50	827	60	1.60	889	63	2.27	942	67	2.41
4000	729	57	1.24	791	60	1.73	849	63	1.80	912	67	2.55	963	71	2.67
4200	757	61	1.43	817	63	1.99	871	67	2.03	935	71	2.88	984	74	2.95
CFM	1.2			1.4			1.6			1.8			2.0		
	RPM	DDC %	BHP	RPM	DDC %	BHP	RPM	DDC %	BHP	RPM	DDC %	BHP	RPM	DDC %	BHP
1600	784	26	0.93	851	30	1.13	906	33	1.32	966	38	1.31	999	41	1.43
1800	803	30	1.03	869	34	1.25	923	38	1.46	981	42	1.42	1015	45	1.55
2000	822	34	1.14	887	38	1.38	939	42	1.61	997	46	1.53	1031	49	1.67
2200	841	38	1.26	904	42	1.52	956	46	1.78	1012	50	1.66	1048	53	1.81
2400	860	42	1.39	922	46	1.68	973	50	1.97	1028	54	1.80	1064	58	1.97
2600	880	46	1.54	939	50	1.86	990	54	2.17	1043	58	1.95	1080	62	2.13
2800	899	50	1.70	957	54	2.06	1006	58	2.40	1058	62	2.11	1097	66	2.31
3000	918	54	1.88	974	58	2.27	1023	62	2.65	1074	66	2.29	1113	70	2.50
3200	937	59	2.07	992	62	2.51	1040	66	2.93	1089	70	2.48	1130	74	2.71
3400	956	63	2.29	1010	66	2.77	1056	70	3.24	1105	74	2.68			
3600	975	67	2.53	1027	71	3.07	1073	74	3.58						
3800	994	71	2.80	1045	74	3.39									
4000	1013	74	3.09												
4200															

Shaded area indicates air flow below 2550 SCFM (300 SCFM/ton) that is not recommended for High Stage cooling or heating. Valid motor operating range for DDC% setting is 20 - 90.

HORIZONTAL FLOW

CFM	0.2			0.4			0.6			0.8			1.0		
	RPM	DDC %	BHP	RPM	DDC %	BHP	RPM	DDC %	BHP	RPM	DDC %	BHP	RPM	DDC %	BHP
1600													645	20	0.55
1800				472	20	0.37	579	24	0.46	571	20	0.53	670	24	0.63
2000	414	21	0.30	502	24	0.44	604	27	0.53	602	24	0.61	695	28	0.71
2200	448	24	0.35	533	27	0.51	629	31	0.61	633	28	0.70	721	32	0.80
2400	481	28	0.41	563	31	0.60	654	35	0.70	663	32	0.81	746	36	0.90
2600	515	32	0.49	593	35	0.71	679	38	0.81	694	36	0.93	771	40	1.01
2800	549	36	0.57	624	39	0.83	705	42	0.93	725	40	1.07	797	44	1.14
3000	582	40	0.67	654	42	0.97	730	45	1.07	756	45	1.23	822	47	1.29
3200	616	44	0.79	684	46	1.14	755	49	1.23	786	49	1.42	848	51	1.45
3400	650	47	0.92	715	50	1.34	780	52	1.41	817	53	1.63	873	55	1.63
3600	683	51	1.08	745	54	1.57	805	56	1.63	848	57	1.88	898	59	1.84
3800	717	55	1.27	775	57	1.85	830	59	1.87	878	61	2.16	924	63	2.08
4000	751	59	1.49	806	61	2.17	856	63	2.15	909	66	2.48	949	67	2.34
4200	784	63	1.75	836	65	2.54	881	67	2.47	940	70	2.86	974	71	2.64
CFM	1.2			1.4			1.6			1.8			2.0		
	RPM	DDC %	BHP	RPM	DDC %	BHP	RPM	DDC %	BHP	RPM	DDC %	BHP	RPM	DDC %	BHP
1600	762	20	0.85	804	21	0.92	843	24	1.02	877	40	1.10	918	28	1.21
1800	779	24	0.94	821	26	1.02	861	28	1.13	895	44	1.22	935	32	1.34
2000	796	28	1.04	838	30	1.12	878	32	1.25	912	48	1.34	952	36	1.48
2200	814	32	1.15	856	34	1.24	895	36	1.38	930	52	1.48	970	40	1.64
2400	831	36	1.27	873	38	1.37	912	40	1.53	947	57	1.64	987	44	1.81
2600	849	40	1.41	890	42	1.52	929	44	1.69	964	61	1.81	1005	48	2.00
2800	866	44	1.56	908	46	1.68	946	48	1.87	982	65	2.00	1022	52	2.21
3000	883	48	1.72	925	50	1.85	964	52	2.06	999	69	2.21	1039	56	2.44
3200	901	53	1.90	942	55	2.05	981	56	2.28	1016	73	2.45	1057	60	2.70
3400	918	57	2.10	960	59	2.26	998	60	2.52	1034	77	2.70	1074	64	2.98
3600	936	61	2.32	977	63	2.50	1015	65	2.79	1051	81	2.99	1092	69	3.30
3800	953	65	2.57	995	67	2.76	1032	69	3.08	1069	85	3.30	1109	73	3.64
4000	970	69	2.84	1012	71	3.05	1049	73	3.40						
4200	988	73	3.14	1029	74	3.37									

Shaded area indicates air flow below 2550 SCFM (300 SCFM/ton) that is not recommended for High Stage cooling or heating. Valid motor operating range for DDC% setting is 20 - 90.

APPENDIX A BLOWER PERFORMANCE DATA

10 TON
MODELS : DHC1203D, DHC1204D & DHC1207D WITH DDC CONTROL
STANDARD STATIC TO 2.4HP (0.2 ~ 0.8 ESP)
DOWN FLOW

CFM	0.2			0.4			0.6			0.8			1.0		
	RPM	DDC %	BHP	RPM	DDC %	BHP	RPM	DDC %	BHP	RPM	DDC %	BHP	RPM	DDC %	BHP
2000	397	21	0.30	495	24	0.36	578	23	0.50	642	27	0.75	-	-	-
2200	420	24	0.35	515	27	0.41	596	26	0.55	659	30	0.83	-	-	-
2400	444	28	0.40	535	30	0.46	614	30	0.61	676	34	0.91	-	-	-
2600	467	31	0.46	554	34	0.52	632	33	0.67	693	37	1.01	-	-	-
2800	490	34	0.53	574	37	0.59	650	37	0.74	710	40	1.12	-	-	-
3000	513	37	0.61	594	40	0.66	668	40	0.82	727	44	1.23	-	-	-
3200	537	40	0.70	613	43	0.75	685	44	0.90	744	47	1.36	-	-	-
3400	560	44	0.80	633	46	0.84	703	47	1.00	761	50	1.51	-	-	-
3600	583	47	0.92	653	49	0.95	721	51	1.10	778	53	1.66	-	-	-
3800	606	50	1.06	673	52	1.07	739	54	1.22	795	57	1.84	-	-	-
4000	630	53	1.22	692	55	1.21	757	58	1.35	812	60	2.03	-	-	-
4200	653	56	1.40	712	58	1.36	775	62	1.49	829	62	2.25	-	-	-

Shaded area indicates air flow below 3000 SCFM (300 SCFM/ton) that is not recommended for High Stage cooling or heating. Valid motor operating range for DDC% setting is 20 - 90.

HORIZONTAL FLOW

CFM	0.2			0.4			0.6			0.8			1.0		
	RPM	DDC %	BHP	RPM	DDC %	BHP	RPM	DDC %	BHP	RPM	DDC %	BHP	RPM	DDC %	BHP
2000	435	23	0.32	521	27	0.39	603	31	0.53	654	33	0.63	-	-	-
2200	464	27	0.37	546	31	0.45	626	35	0.59	675	37	0.71	-	-	-
2400	494	32	0.43	571	35	0.52	648	39	0.67	696	41	0.80	-	-	-
2600	523	36	0.51	596	39	0.60	671	43	0.75	718	45	0.90	-	-	-
2800	552	41	0.60	621	44	0.69	693	47	0.85	739	49	1.01	-	-	-
3000	581	45	0.70	646	48	0.79	715	51	0.96	760	52	1.14	-	-	-
3200	611	50	0.82	671	52	0.91	738	55	1.08	782	56	1.29	-	-	-
3400	640	54	0.97	695	57	1.05	760	59	1.22	803	60	1.45	-	-	-
3600	669	59	1.13	720	61	1.21	782	62	1.37	824	62	1.64	-	-	-
3800	699	62	1.33	745	62	1.39							-	-	-
4000													-	-	-
4200													-	-	-

Shaded area indicates air flow below 3000 SCFM (300 SCFM/ton) that is not recommended for High Stage cooling or heating.
Valid motor operating range for DDC% setting is 20 - 90.

APPENDIX A BLOWER PERFORMANCE DATA

10 TON
MODELS : DHC1203L, DHC1204L & DHC1207L WITH DDC CONTROL
MEDIUM STATIC TO 3.5HP (0.2 ~ 1.4 ESP)
DOWN FLOW

CFM	0.2			0.4			0.6			0.8			1.0		
	RPM	DDC %	BHP	RPM	DDC %	BHP	RPM	DDC %	BHP	RPM	DDC %	BHP	RPM	DDC %	BHP
1800	371	18	0.27	477	21	0.33	565	17	0.50	621	19	0.59	715	23	0.78
2000	395	21	0.31	497	25	0.37	527	20	0.57	638	23	0.66	729	27	0.86
2200	418	25	0.35	517	28	0.42	551	24	0.64	656	27	0.73	742	30	0.95
2400	442	28	0.40	537	31	0.47	575	28	0.72	673	30	0.80	756	34	1.05
2600	465	31	0.47	557	34	0.53	599	32	0.81	691	34	0.89	770	38	1.16
2800	489	35	0.54	577	37	0.60	623	36	0.92	708	38	0.98	784	41	1.28
3000	512	38	0.62	597	41	0.68	647	39	1.03	726	41	1.08	798	45	1.42
3200	536	41	0.71	617	44	0.77	671	43	1.16	743	45	1.20	812	48	1.56
3400	559	45	0.81	636	47	0.86	695	47	1.31	761	49	1.32	825	52	1.73
3600	583	48	0.94	656	50	0.97	719	51	1.48	778	53	1.46	839	55	1.91
3800	606	51	1.08	676	53	1.10	743	55	1.67	795	56	1.62	853	59	2.11
4000	630	55	1.24	696	57	1.24	767	58	1.88	813	60	1.79	867	63	2.33
4200	653	58	1.43	716	60	1.39	791	62	2.12	830	64	1.97	881	66	2.58
4400	676	61	1.64	736	63	1.57	815	66	2.39	848	68	2.18	895	70	2.85
4600	700	65	1.89	756	66	1.77	839	70	2.70	865	71	2.41	908	73	3.15
4800	723	68	2.17	776	70	2.00	863	74	3.04	883	74	2.66			
5000	747	71	2.50	796	73	2.25									

CFM	1.2			1.4			1.6			1.8			2.0		
	RPM	DDC %	BHP	RPM	DDC %	BHP	RPM	DDC %	BHP	RPM	DDC %	BHP	RPM	DDC %	BHP
1800	767	31	1.10	821	26	0.90	-	-	-	-	-	-	-	-	-
2000	781	34	1.19	834	29	0.97	-	-	-	-	-	-	-	-	-
2200	795	37	1.29	848	33	1.06	-	-	-	-	-	-	-	-	-
2400	808	40	1.40	861	37	1.14	-	-	-	-	-	-	-	-	-
2600	822	43	1.52	875	41	1.24	-	-	-	-	-	-	-	-	-
2800	836	46	1.64	888	44	1.34	-	-	-	-	-	-	-	-	-
3000	850	49	1.78	901	48	1.45	-	-	-	-	-	-	-	-	-
3200	863	53	1.93	915	52	1.57	-	-	-	-	-	-	-	-	-
3400	877	56	2.09	928	55	1.71	-	-	-	-	-	-	-	-	-
3600	891	59	2.26	942	59	1.85	-	-	-	-	-	-	-	-	-
3800	904	62	2.45	955	63	2.00	-	-	-	-	-	-	-	-	-
4000	918	65	2.66	969	67	2.17	-	-	-	-	-	-	-	-	-
4200	932	68	2.88	982	70	2.35	-	-	-	-	-	-	-	-	-
4400	946	71	3.12	995	74	2.54	-	-	-	-	-	-	-	-	-
4600	959	74	3.38				-	-	-	-	-	-	-	-	-
4800							-	-	-	-	-	-	-	-	-
5000							-	-	-	-	-	-	-	-	-

Shaded area indicates air flow below 3000 SCFM (300 SCFM/ton) that is not recommended for High Stage cooling or heating. Valid motor operating range for DDC% setting is 20 - 90.

HORIZONTAL FLOW

CFM	0.2			0.4			0.6			0.8			1.0		
	RPM	DDC %	BHP	RPM	DDC %	BHP	RPM	DDC %	BHP	RPM	DDC %	BHP	RPM	DDC %	BHP
1800	368	17	0.24	488	21	0.34	563	17	0.58	635	19	0.59	736	24	0.80
2000	393	21	0.28	509	25	0.38	582	21	0.66	653	23	0.65	751	27	0.88
2200	419	24	0.32	530	28	0.43	601	24	0.74	672	27	0.72	766	31	0.97
2400	444	27	0.37	550	31	0.48	620	28	0.84	690	31	0.80	780	35	1.08
2600	470	31	0.42	571	34	0.55	639	32	0.94	708	35	0.88	795	38	1.19
2800	495	34	0.48	591	38	0.62	658	36	1.06	727	38	0.97	809	42	1.31
3000	520	38	0.56	612	41	0.69	677	40	1.20	745	42	1.08	824	46	1.45
3200	546	41	0.64	632	44	0.78	697	43	1.35	764	46	1.19	839	49	1.60
3400	571	45	0.74	653	47	0.88	716	47	1.52	782	50	1.31	853	53	1.77
3600	596	48	0.85	674	51	0.99	735	51	1.72	800	54	1.45	868	57	1.96
3800	622	51	0.98	694	54	1.12	754	55	1.75	819	58	1.61	883	60	2.16
4000	647	55	1.12	715	57	1.26	773	59	1.78	837	61	1.77	897	64	2.39
4200	672	58	1.29	735	60	1.43	792	62	1.87	855	65	1.96	912	68	2.64
4400	698	62	1.48	756	64	1.61	811	66	2.11	874	69	2.17	927	71	2.92
4600	723	65	1.71	777	67	1.81	830	70	2.35	892	73	2.40	941	74	3.23
4800	749	68	1.96	797	70	2.04	849	74	2.63				955	78	3.57
5000	774	72	2.26	818	73	2.30							970	82	3.94

CFM	1.2			1.4			1.6			1.8			2.0		
	RPM	DDC %	BHP	RPM	DDC %	BHP	RPM	DDC %	BHP	RPM	DDC %	BHP	RPM	DDC %	BHP
1800	865	31	1.10	832	27	0.93	-	-	-	-	-	-	-	-	-
2000	873	35	1.19	849	30	1.03	-	-	-	-	-	-	-	-	-
2200	880	38	1.29	867	34	1.13	-	-	-	-	-	-	-	-	-
2400	888	41	1.40	885	38	1.25	-	-	-	-	-	-	-	-	-
2600	896	44	1.52	902	42	1.38	-	-	-	-	-	-	-	-	-
2800	903	47	1.64	920	46	1.53	-	-	-	-	-	-	-	-	-
3000	911	50	1.78	938	50	1.69	-	-	-	-	-	-	-	-	-
3200	918	53	1.93	955	53	1.87	-	-	-	-	-	-	-	-	-
3400	926	57	2.09	973	57	2.06	-	-	-	-	-	-	-	-	-
3600	934	60	2.26	991	61	2.28	-	-	-	-	-	-	-	-	-
3800	941	63	2.45	1009	65	2.52	-	-	-	-	-	-	-	-	-
4000	949	66	2.65	1026	69	2.79	-	-	-	-	-	-	-	-	-
4200	957	69	2.87	1044	72	3.08	-	-	-	-	-	-	-	-	-
4400	964	72	3.11	1062	74	3.40	-	-	-	-	-	-	-	-	-
4600	972	74	3.37	1079	80	3.76	-	-	-	-	-	-	-	-	-
4800	979	79	3.65	1097	84	4.16	-	-	-	-	-	-	-	-	-
5000	987	82	3.96	1115	88	4.60	-	-	-	-	-	-	-	-	-

Shaded area indicates air flow below 3000 SCFM (300 SCFM/ton) that is not recommended for High Stage cooling or heating. Valid motor operating range for DDC% setting is 20 - 90.

APPENDIX A BLOWER PERFORMANCE DATA

10 TON
MODELS : DHC1203W, DHC1204W & DHC1207W WITH DDC CONTROL
MEDIUM STATIC TO 3.5 HP (0.2 ~ 2.0 ESP)
DOWN FLOW

CFM	0.2			0.4			0.6			0.8			1.0		
	RPM	DDC %	BHP	RPM	DDC %	BHP	RPM	DDC %	BHP	RPM	DDC %	BHP	RPM	DDC %	BHP
1800	371	18	0.27	479	21	0.34	539	15	0.48	618	18	0.61	704	22	0.77
2000	395	22	0.31	499	24	0.39	559	19	0.53	636	22	0.67	719	26	0.85
2200	418	25	0.35	519	28	0.43	579	23	0.58	654	26	0.74	734	29	0.94
2400	442	28	0.40	539	31	0.49	599	27	0.65	672	30	0.82	749	33	1.03
2600	465	31	0.47	559	34	0.55	619	31	0.71	689	34	0.91	764	37	1.14
2800	489	35	0.54	579	38	0.62	639	35	0.79	707	38	1.00	779	41	1.26
3000	512	38	0.62	599	41	0.70	659	39	0.87	725	41	1.11	794	44	1.40
3200	536	41	0.71	619	44	0.79	679	43	0.96	743	45	1.23	809	48	1.54
3400	559	45	0.81	639	48	0.89	699	47	1.07	761	49	1.35	824	52	1.70
3600	583	48	0.94	659	51	1.01	719	51	1.18	779	53	1.50	839	56	1.88
3800	606	51	1.08	680	54	1.14	738	54	1.30	796	57	1.65	853	59	2.08
4000	630	55	1.24	700	57	1.28	758	58	1.44	814	61	1.83	868	63	2.30
4200	653	58	1.43	720	61	1.44	778	62	1.59	832	65	2.02	883	67	2.54
4400	677	61	1.64	740	64	1.63	798	66	1.76	850	68	2.23	898	70	2.81
4600	701	65	1.89	760	67	1.83	818	70	1.94	868	72	2.47	913	74	2.85
4800	724	68	2.17	780	71	2.07	838	74	2.15	885	74	2.73			
5000	748	71	2.50	800	74	2.33									
CFM	1.2			1.4			1.6			1.8			2.0		
	RPM	DDC %	BHP	RPM	DDC %	BHP	RPM	DDC %	BHP	RPM	DDC %	BHP	RPM	DDC %	BHP
1800	759	20	0.74	837	22	0.87	834	36	1.49	826	42	1.63	857	45	1.80
2000	774	24	0.80	849	26	0.94	850	39	1.58	847	45	1.70	879	48	1.87
2200	788	28	0.87	861	30	1.02	866	42	1.68	868	48	1.77	900	50	1.95
2400	803	32	0.94	873	34	1.11	882	45	1.78	889	50	1.84	922	53	2.03
2600	818	36	1.02	885	38	1.20	898	48	1.89	910	53	1.92	943	55	2.11
2800	832	40	1.11	897	42	1.30	914	51	2.01	931	55	1.99	965	58	2.19
3000	847	44	1.20	909	46	1.41	931	54	2.13	952	58	2.08	987	60	2.28
3200	862	48	1.30	921	51	1.52	947	57	2.26	972	61	2.16	1008	63	2.38
3400	876	52	1.41	933	55	1.65	963	60	2.40	993	63	2.25	1030	65	2.47
3600	891	57	1.52	945	59	1.79	979	63	2.55	1014	66	2.34	1052	68	2.57
3800	905	61	1.65	957	63	1.94	995	66	2.71	1035	68	2.44	1073	70	2.68
4000	920	65	1.79	969	67	2.10	1011	69	2.88	1056	71	2.54	1095	73	2.79
4200	935	69	1.94	981	71	2.27	1027	72	3.06	1077	74	2.64	1116	74	2.90
4400	949	73	2.10	993	74	2.46	1043	74	3.08						
4600															
4800															
5000															

Shaded area indicates air flow below 3000 SCFM (300 SCFM/ton) that is not recommended for High Stage cooling or heating. Valid motor operating range for DDC% setting is 20 - 90.

HORIZONTAL FLOW

CFM	0.2			0.4			0.6			0.8			1.0		
	RPM	DDC %	BHP	RPM	DDC %	BHP	RPM	DDC %	BHP	RPM	DDC %	BHP	RPM	DDC %	BHP
1800	370	17	0.27	490	21	0.35	574	16	0.53	629	18	0.61	707	22	0.75
2000	395	21	0.31	510	25	0.39	592	20	0.59	648	22	0.67	725	26	0.83
2200	420	24	0.35	531	28	0.45	610	24	0.65	667	26	0.75	744	30	0.92
2400	446	28	0.40	552	31	0.50	629	28	0.72	687	30	0.82	762	34	1.01
2600	471	31	0.47	573	35	0.57	647	32	0.79	706	34	0.91	781	38	1.12
2800	496	35	0.54	594	38	0.64	665	35	0.88	725	38	1.01	799	41	1.24
3000	521	38	0.62	615	41	0.72	684	39	0.97	745	42	1.11	818	45	1.37
3200	546	42	0.71	635	45	0.81	702	43	1.07	764	46	1.23	836	49	1.51
3400	571	45	0.81	656	48	0.91	720	47	1.18	783	50	1.36	855	53	1.67
3600	596	49	0.94	677	51	1.03	739	51	1.31	802	54	1.50	873	57	1.85
3800	622	52	1.08	698	55	1.16	757	55	1.44	822	58	1.66	892	61	2.04
4000	647	56	1.24	719	58	1.31	775	59	1.59	841	62	1.83	910	64	2.26
4200	672	59	1.43	740	61	1.48	794	62	1.76	860	66	2.03	929	68	2.49
4400	697	63	1.64	760	65	1.67	812	66	1.95	880	70	2.24	947	72	2.75
4600	722	66	1.89	781	68	1.88	830	70	2.15	899	74	2.47	966	74	3.04
4800	747	70	2.17	802	71	2.12	849	74	2.38						
5000	773	73	2.50	823	74	2.39									
CFM	1.2			1.4			1.6			1.8			2.0		
	RPM	DDC %	BHP	RPM	DDC %	BHP	RPM	DDC %	BHP	RPM	DDC %	BHP	RPM	DDC %	BHP
1800	581	25	0.95	827	29	1.15	806	38	1.57	924	43	1.92	905	44	1.96
2000	613	28	1.03	844	33	1.25	828	41	1.67	940	46	2.03	926	47	2.08
2200	645	32	1.12	860	36	1.35	851	44	1.77	955	48	2.16	948	50	2.21
2400	677	36	1.21	877	40	1.47	873	47	1.88	971	51	2.29	970	52	2.35
2600	709	40	1.31	894	44	1.59	895	50	2.00	987	54	2.44	991	55	2.49
2800	741	44	1.42	910	47	1.72	917	53	2.12	1002	56	2.59	1013	58	2.65
3000	773	47	1.54	927	51	1.86	940	56	2.26	1018	59	2.75	1034	61	2.81
3200	805	51	1.67	944	55	2.02	962	59	2.39	1033	62	2.92	1056	63	2.99
3400	837	55	1.81	960	58	2.19	984	62	2.54	1049	65	3.10	1077	66	3.17
3600	869	59	1.96	977	62	2.37	1006	65	2.70	1065	67	3.29	1099	69	3.37
3800	901	63	2.12	994	66	2.57	1029	68	2.87	1080	70	3.49	1121	72	3.57
4000	933	66	2.30	1011	69	2.78	1051	71	3.04	1096	73	3.71	1142	74	3.80
4200	965	70	2.49	1027	73	3.01	1073	74	3.23	1111	76	3.94	1164	77	4.03
4400	997	74	2.70							1127	78	4.18	1185	80	4.28
4600										1143	81	4.44	1207	82	4.54
4800										1158	84	4.71	1229	85	4.83
5000										1174	86	5.00	1250	88	5.12

Shaded area indicates air flow below 3000 SCFM (300 SCFM/ton) that is not recommended for High Stage cooling or heating. Valid motor operating range for DDC% setting is 20 - 90.

APPENDIX A BLOWER PERFORMANCE DATA

12.5 TON
MODELS : DHC1503D, DHC1504D & DHC1507D WITH DDC CONTROL
STANDARD STATIC TO 3.5HP (0.2 ~ 0.8 ESP)
DOWN FLOW

CFM	0.2			0.4			0.6			0.8			1.0		
	RPM	DDC %	BHP	RPM	DDC %	BHP	RPM	DDC %	BHP	RPM	DDC %	BHP	RPM	DDC %	BHP
2000	417	11	0.27	546	13	0.44	674	20	0.61	785	27	0.85	-	-	-
2200	433	14	0.31	557	17	0.49	682	23	0.66	790	30	0.92	-	-	-
2400	448	18	0.34	569	20	0.54	690	26	0.72	795	33	1.00	-	-	-
2600	463	22	0.39	580	24	0.60	698	30	0.78	800	36	1.08	-	-	-
2800	478	25	0.44	592	28	0.66	706	33	0.84	806	39	1.17	-	-	-
3000	493	29	0.49	603	31	0.73	714	37	0.91	811	42	1.27	-	-	-
3200	508	32	0.56	615	35	0.80	722	40	0.99	816	45	1.38	-	-	-
3400	523	36	0.63	626	38	0.89	730	43	1.07	821	48	1.49	-	-	-
3600	539	39	0.71	638	42	0.98	738	47	1.16	826	51	1.62	-	-	-
3800	554	43	0.80	649	46	1.09	746	50	1.25	832	54	1.75	-	-	-
4000	569	46	0.90	661	49	1.20	754	54	1.36	837	58	1.90	-	-	-
4200	584	50	1.01	672	53	1.33	762	57	1.47	842	61	2.06	-	-	-
4400	599	53	1.14	684	56	1.47	770	60	1.59	847	64	2.23	-	-	-
4600	614	57	1.29	695	60	1.62	778	64	1.73	852	67	2.41	-	-	-
4800	629	60	1.45	706	64	1.79	786	67	1.87	857	70	2.61	-	-	-

Shaded area indicates air flow below 3750 SCFM (300 SCFM/ton) that is not recommended for High Stage cooling or heating. Valid motor operating range for DDC% setting is 20 - 90.

HORIZONTAL FLOW

CFM	0.2			0.4			0.6			0.8			1.0		
	RPM	DDC %	BHP	RPM	DDC %	BHP	RPM	DDC %	BHP	RPM	DDC %	BHP	RPM	DDC %	BHP
2000	440	15	0.29	596	18	0.64	596	18	0.49	711	25	0.79	-	-	-
2200	462	18	0.33	615	22	0.71	615	22	0.54	725	29	0.88	-	-	-
2400	484	22	0.37	634	26	0.78	634	26	0.60	738	32	0.97	-	-	-
2600	507	26	0.41	653	29	0.87	653	29	0.66	752	35	1.07	-	-	-
2800	529	29	0.47	672	33	0.96	672	33	0.73	766	39	1.18	-	-	-
3000	551	33	0.53	691	37	1.06	691	37	0.80	779	42	1.31	-	-	-
3200	573	36	0.59	710	41	1.17	710	41	0.89	793	45	1.45	-	-	-
3400	596	40	0.67	729	44	1.29	729	44	0.98	806	49	1.60	-	-	-
3600	618	44	0.76	748	48	1.43	748	48	1.09	820	52	1.77	-	-	-
3800	640	47	0.85	767	52	1.58	767	52	1.20	833	55	1.95	-	-	-
4000	663	51	0.96	786	56	1.74	786	56	1.33	847	59	2.16	-	-	-
4200	685	54	1.08	806	59	1.93	806	59	1.47	861	62	2.38	-	-	-
4400	707	58	1.22	825	63	2.13	825	63	1.62	874	65	2.63	-	-	-
4600	729	62	1.38	844	67	2.35	844	67	1.79	888	69	2.91	-	-	-
4800	752	65	1.55	863	71	2.60	863	71	1.98	901	72	3.22	-	-	-

Shaded area indicates air flow below 3750 SCFM (300 SCFM/ton) that is not recommended for High Stage cooling or heating.
Valid motor operating range for DDC% setting is 20 - 90.

APPENDIX A BLOWER PERFORMANCE DATA

12.5 TON
MODELS : DHC1503L, DHC1504L & DHC1507L WITH DDC CONTROL
MEDIUM STATIC TO 3.5HP (0.2 ~ 1.4 ESP)
DOWN FLOW

CFM	0.2			0.4			0.6			0.8			1.0		
	RPM	DDC %	BHP	RPM	DDC %	BHP	RPM	DDC %	BHP	RPM	DDC %	BHP	RPM	DDC %	BHP
2200	441	14	0.34	557	8	0.49	677	15	0.72	764	18	0.95	834	27	1.01
2400	456	17	0.38	569	12	0.53	685	19	0.78	772	22	0.93	843	30	1.09
2600	470	21	0.43	580	17	0.57	694	23	0.85	779	26	1.00	851	34	1.19
2800	484	25	0.48	591	21	0.62	702	27	0.92	787	30	1.09	859	38	1.28
3000	499	28	0.54	603	25	0.67	711	31	0.99	795	35	1.18	867	42	1.39
3200	513	32	0.61	614	29	0.73	719	35	1.08	802	39	1.28	876	46	1.51
3400	527	35	0.69	625	34	0.79	727	39	1.17	810	43	1.38	884	49	1.63
3600	541	39	0.78	636	38	0.86	736	43	1.26	818	47	1.50	892	53	1.77
3800	556	43	0.88	648	42	0.93	744	47	1.37	825	51	1.62	900	57	1.92
4000	570	46	0.99	659	47	1.00	753	51	1.48	833	56	1.76	909	61	2.08
4200	584	50	1.11	670	51	1.09	761	56	1.61	841	60	1.90	917	65	2.25
4400	599	53	1.26	682	55	1.18	769	60	1.74	849	64	2.06	925	69	2.44
4600	613	57	1.42	693	59	1.28	778	64	1.88	856	68	2.23	934	72	2.64
4800	627	61	1.60	704	64	1.38	786	68	2.04	864	72	2.42	942	74	2.86
5000	641	64	1.80	716	68	1.50	795	72	2.21	872	74	2.62			
CFM	**1.2**			**1.4**			**1.6**			**1.8**			**2.0**		
	RPM	DDC %	BHP	RPM	DDC %	BHP	RPM	DDC %	BHP	RPM	DDC %	BHP	RPM	DDC %	BHP
2200	880	38	1.50	1173	28	1.77	-	-	-	-	-	-	-	-	-
2400	891	41	1.59	1179	32	1.88	-	-	-	-	-	-	-	-	-
2600	902	44	1.69	1184	35	2.00	-	-	-	-	-	-	-	-	-
2800	913	48	1.79	1189	38	2.12	-	-	-	-	-	-	-	-	-
3000	923	51	1.91	1195	41	2.26	-	-	-	-	-	-	-	-	-
3200	934	54	2.02	1200	44	2.39	-	-	-	-	-	-	-	-	-
3400	945	57	2.15	1206	48	2.54	-	-	-	-	-	-	-	-	-
3600	956	60	2.28	1211	51	2.70	-	-	-	-	-	-	-	-	-
3800	966	63	2.42	1217	54	2.87	-	-	-	-	-	-	-	-	-
4000	977	66	2.57	1222	57	3.04	-	-	-	-	-	-	-	-	-
4200	988	69	2.73	1227	60	3.23	-	-	-	-	-	-	-	-	-
4400	999	72	2.90	1233	63	3.43	-	-	-	-	-	-	-	-	-
4600	1009	74	3.08	1238	67	3.64	-	-	-	-	-	-	-	-	-
4800				1244	70	3.87	-	-	-	-	-	-	-	-	-
5000				1249	73	4.11	-	-	-	-	-	-	-	-	-

Shaded area indicates air flow below 3750 SCFM (300 SCFM/ton) that is not recommended for High Stage cooling or heating. Valid motor operating range for DDC% setting is 20 - 90.

HORIZONTAL FLOW

CFM	0.2			0.4			0.6			0.8			1.0		
	RPM	DDC %	BHP	RPM	DDC %	BHP	RPM	DDC %	BHP	RPM	DDC %	BHP	RPM	DDC %	BHP
2200	472	17	0.40	531	8	0.48	634	13	0.68	690	18	0.84	731	26	0.95
2400	493	21	0.45	553	12	0.53	651	18	0.75	707	22	0.93	749	30	1.05
2600	514	24	0.51	575	17	0.59	669	22	0.83	725	26	1.02	767	34	1.16
2800	536	28	0.58	597	22	0.65	686	27	0.92	742	31	1.13	786	38	1.28
3000	557	32	0.65	619	27	0.72	704	31	1.01	759	35	1.25	804	42	1.42
3200	578	36	0.74	641	32	0.80	721	36	1.12	776	40	1.38	822	45	1.57
3400	599	40	0.83	663	36	0.88	739	41	1.24	793	44	1.53	841	49	1.73
3600	620	44	0.93	685	41	0.97	756	45	1.37	810	48	1.69	859	53	1.91
3800	641	47	1.05	707	46	1.08	774	50	1.51	828	53	1.86	877	57	2.11
4000	662	51	1.19	728	51	1.19	791	54	1.67	845	57	2.06	896	61	2.34
4200	683	55	1.34	750	55	1.31	808	59	1.84	862	62	2.28	914	65	2.58
4400	704	59	1.51	772	60	1.45	826	63	2.04	879	66	2.52	932	69	2.85
4600	725	63	1.70	794	65	1.60	843	68	2.25	896	70	2.78	950	73	3.01
4800	747	66	1.92	816	70	1.77	861	72	2.49	913	74	3.07			
5000	768	70	2.17	838	74	1.96	878	74	2.75						
CFM	**1.2**			**1.4**			**1.6**			**1.8**			**2.0**		
	RPM	DDC %	BHP	RPM	DDC %	BHP	RPM	DDC %	BHP	RPM	DDC %	BHP	RPM	DDC %	BHP
2200	799	29	0.90	867	32	1.10	-	-	-	-	-	-	-	-	-
2400	814	33	0.97	880	36	1.19	-	-	-	-	-	-	-	-	-
2600	829	37	1.05	894	40	1.29	-	-	-	-	-	-	-	-	-
2800	844	40	1.14	907	44	1.40	-	-	-	-	-	-	-	-	-
3000	859	44	1.23	920	47	1.51	-	-	-	-	-	-	-	-	-
3200	874	48	1.34	934	51	1.64	-	-	-	-	-	-	-	-	-
3400	889	52	1.45	947	55	1.78	-	-	-	-	-	-	-	-	-
3600	904	56	1.57	960	58	1.92	-	-	-	-	-	-	-	-	-
3800	919	60	1.70	974	62	2.08	-	-	-	-	-	-	-	-	-
4000	934	63	1.84	987	66	2.26	-	-	-	-	-	-	-	-	-
4200	949	67	1.99	1000	69	2.45	-	-	-	-	-	-	-	-	-
4400	964	71	2.16	1013	73	2.65	-	-	-	-	-	-	-	-	-
4600	979	74	2.90				-	-	-	-	-	-	-	-	-
4800							-	-	-	-	-	-	-	-	-
5000							-	-	-	-	-	-	-	-	-

Shaded area indicates air flow below 3750 SCFM (300 SCFM/ton) that is not recommended for High Stage cooling or heating. Valid motor operating range for DDC% setting is 20 - 90.

APPENDIX A BLOWER PERFORMANCE DATA

12.5 TON
MODELS : DHC1503W, DHC1504W & DHC1507W WITH DDC CONTROL
MEDIUM STATIC TO 5.0 HP (0.2 ~ 2.0 ESP)
DOWN FLOW

CFM	0.2			0.4			0.6			0.8			1.0		
	RPM	DDC %	BHP	RPM	DDC %	BHP	RPM	DDC %	BHP	RPM	DDC %	BHP	RPM	DDC %	BHP
2400															
2600													796	22	0.94
2800										751	20	1.04	819	27	1.04
3000							698	22	0.97	778	25	1.17	841	32	1.15
3200	625	36	0.84	657	23	0.86	726	27	1.09	806	31	1.32	864	37	1.27
3400	654	40	0.96	687	29	0.97	755	33	1.23	833	37	1.49	886	42	1.40
3600	683	44	1.10	717	35	1.09	783	39	1.38	860	42	1.68	908	47	1.55
3800	712	48	1.27	748	41	1.23	811	44	1.56	887	48	1.89	931	52	1.71
4000	741	52	1.46	778	47	1.39	839	50	1.76	914	54	2.13	953	57	1.90
4200	770	57	1.68	809	52	1.56	867	56	1.98	941	59	2.40	976	62	2.09
4400	799	61	1.93	839	58	1.76	895	61	2.24	968	65	2.71	998	67	2.31
4600	828	65	2.22	869	64	1.99	923	67	2.52	996	71	3.06	1021	73	2.56
4800	857	69	2.56	900	70	2.24	952	73	2.84	1023	76	3.45	1043	78	2.83
5000	886	74	2.94	930	75	2.52	980	78	3.21	1050	82	3.89	1066	83	3.12
5200	915	78	3.39	961	81	2.85	1008	84	3.62	1077	88	4.38	1088	88	3.45
5400	944	82	3.90	991	87	3.21	1036	89	4.08	1104	90	4.94	1111	90	3.82
5600	973	86	4.48	1021	90	3.62									

CFM	1.2			1.4			1.6			1.8			2.0		
	RPM	DDC %	BHP	RPM	DDC %	BHP	RPM	DDC %	BHP	RPM	DDC %	BHP	RPM	DDC %	BHP
2400	1010	27	1.13	1011	34	1.59	1060	37	1.82	1107	39	1.82	1127	44	2.11
2600	1027	31	1.22	1021	38	1.72	1069	41	1.97	1116	43	1.93	1138	48	2.29
2800	1044	36	1.33	1031	42	1.86	1079	45	2.13	1126	47	2.05	1149	52	2.48
3000	1061	40	1.44	1041	46	2.02	1088	49	2.31	1136	51	2.18	1161	56	2.69
3200	1077	45	1.56	1052	50	2.19	1098	53	2.50	1146	55	2.31	1172	60	2.91
3400	1094	49	1.69	1062	54	2.37	1107	57	2.71	1155	59	2.45	1184	63	3.15
3600	1111	53	1.83	1072	58	2.57	1117	61	2.94	1165	63	2.61	1195	67	3.41
3800	1128	58	1.98	1082	62	2.78	1126	65	3.18	1175	67	2.77	1206	71	3.70
4000	1145	62	2.14	1092	66	3.01	1136	69	3.45	1184	71	2.94	1218	75	4.01
4200	1161	67	2.32	1102	70	3.26	1145	73	3.73	1194	75	3.12	1229	79	4.34
4400	1178	71	2.51	1112	75	3.53	1155	77	4.05	1204	79	3.31	1241	83	4.70
4600	1195	76	2.72	1122	79	3.83	1164	81	4.38	1213	83	3.52	1252	87	5.09
4800	1212	80	2.95	1132	83	4.15	1173	85	4.75	1223	87	3.74			
5000	1229	85	3.20	1142	87	4.49	1183	89	5.14	1233	90	3.97			
5200	1246	89	3.46	1153	90	4.87	1192	90	5.57						
5400															
5600															

Shaded area indicates air flow below 3750 SCFM (300 SCFM/ton) that is not recommended for High Stage cooling or heating. Valid motor operating range for DDC% setting is 20 - 90.

HORIZONTAL FLOW

CFM	0.2			0.4			0.6			0.8			1.0		
	RPM	DDC %	BHP	RPM	DDC %	BHP	RPM	DDC %	BHP	RPM	DDC %	BHP	RPM	DDC %	BHP
2400															
2600													797	23	1.08
2800										741	21	0.96	813	28	1.19
3000	563	31	0.56	628	21	0.97	686	24	0.88	761	26	1.06	830	33	1.32
3200	588	35	0.63	650	26	1.10	707	30	0.97	780	32	1.17	846	38	1.46
3400	613	39	0.71	673	31	1.24	729	35	1.07	800	37	1.29	862	42	1.61
3600	637	44	0.80	695	37	1.40	750	40	1.19	819	42	1.43	879	47	1.78
3800	662	48	0.90	718	42	1.57	772	45	1.31	839	48	1.58	895	52	1.97
4000	687	52	1.02	740	47	1.77	794	50	1.45	858	53	1.75	911	57	2.17
4200	712	56	1.15	763	52	2.00	815	56	1.60	878	58	1.93	927	61	2.40
4400	736	60	1.30	786	58	2.25	837	61	1.77	897	64	2.13	944	66	2.66
4600	761	64	1.46	808	63	2.54	858	66	1.96	916	69	2.36	960	71	2.93
4800	786	68	1.65	831	68	2.87	880	71	2.16	936	74	2.60	976	76	3.24
5000	811	72	1.86	853	73	3.23	901	77	2.39	955	79	2.88	992	81	3.58
5200	836	76	2.09	876	79	3.64	923	82	2.64	975	85	3.18	1009	85	3.96
5400	860	81	2.36	898	84	4.11	944	87	2.92	994	90	3.51	1025	90	4.38
5600	885	85	2.66	921	89	4.63	966	90	3.22						

CFM	1.2			1.4			1.6			1.8			2.0		
	RPM	DDC %	BHP	RPM	DDC %	BHP	RPM	DDC %	BHP	RPM	DDC %	BHP	RPM	DDC %	BHP
2400	842	21	1.13	909	24	1.31	1012	31	1.45	1082	40	2.03	1118	26	2.21
2600	857	26	1.24	923	29	1.45	1022	36	1.57	1089	43	2.20	1125	29	2.34
2800	872	31	1.37	937	34	1.60	1031	40	1.70	1096	47	2.38	1132	32	2.49
3000	888	36	1.52	951	39	1.77	1041	44	1.85	1103	51	2.58	1140	35	2.64
3200	903	40	1.68	965	43	1.96	1051	49	2.00	1110	55	2.79	1147	38	2.81
3400	918	45	1.86	979	48	2.16	1061	53	2.17	1117	59	3.03	1154	41	2.98
3600	934	50	2.05	993	53	2.39	1071	57	2.35	1124	63	3.28	1162	45	3.17
3800	949	55	2.27	1007	57	2.64	1080	62	2.54	1131	66	3.55	1169	48	3.36
4000	965	59	2.50	1020	62	2.92	1090	66	2.76	1138	70	3.85	1176	51	3.57
4200	980	64	2.77	1034	67	3.23	1100	70	2.98	1145	74	4.17	1184	54	3.79
4400	995	69	3.06	1048	72	3.57	1110	75	3.23	1152	78	4.52	1191	57	4.02
4600	1011	74	3.38	1062	76	3.94	1120	79	3.50	1159	82	4.89	1198	60	4.27
4800	1026	78	3.74	1076	81	4.36	1130	84	3.79						
5000	1041	83	4.13	1090	86	4.82	1139	88	4.11						
5200	1057	88	4.56	1104	90	5.32	1149	90	4.45						
5400	1072	90	5.04												
5600															

Shaded area indicates air flow below 3750 SCFM (300 SCFM/ton) that is not recommended for High Stage cooling or heating.
Valid motor operating range for DDC% setting is 20 - 90.

APPENDIX B ELECTRICAL DATA

Model Number	Electrical Rating	Compressor			Outdoor Fan Motor			Indoor Fan Motor			Optional Electric Heat			Optional Powered Convienience Outlet	Optional Power Exhaust	Power Supply	
		QTY	RLA	LRA	QTY	HP	FLA	QTY	HP	FLA	Part #	KW*	FLA	FLA	FLA	MCA	MOP
DHC0903D	208/230/3/60	2	12.2	120.4	2	0.33	2	1	1.7	5.8	-	-	-	-	-	37.2/37.2	45/45
											-	-	-	9.6/8.7	-	46.8/45.9	50/50
											-	-	-	-	3.3/3.0 (2.4)	40.5/40.2	50/50
											-	-	-	9.6/8.7	3.3/3.0 (2.4)	50.1/48.9	60/60
											EH*D-3M10	7.5/10.0	20.8/24.1	-	-	37.2/37.3	45/45
														9.6/8.7	-	46.8/48.2	50/50
														-	3.3/3.0 (2.4)	40.5/41.1	50/50
														9.6/8.7	3.3/3.0 (2.4)	50.1/51.9	60/60
											EH*D-3M15	11.3/15.0	31.3/36.1	-	-	46.3/52.4	50/60
														9.6/8.7	-	58.3/63.2	60/70
														-	3.3/3.0 (2.4)	50.5/56.1	60/60
														9.6/8.7	3.3/3.0 (2.4)	62.5/67.0	70/70
											EH*D-3M20	15.0/20.0	41.7/48.1	-	-	59.4/67.4	60/70
														9.6/8.7	-	71.4/78.3	80/80
														-	3.3/3.0 (2.4)	63.5/71.1	70/80
														9.6/8.7	3.3/3.0 (2.4)	75.5/82.0	80/90
											EH*D-3M30	21.6/28.8	60.0/69.3	-	-	82.3/93.9	90/100
														9.6/8.7	-	94.3/105	100/110
														-	3.3/3.0 (2.4)	86.5/97.6	90/100
														9.6/8.7	3.3/3.0 (2.4)	98.5/108	100/110
											EH*D-3M45	33.8/45.0	93.8/108	-	-	125/143	125/150
														9.6/8.7	-	137/153	150/175
														-	3.3/3.0 (2.4)	129/146	150/150
														9.6/8.7	3.3/3.0 (2.4)	141/157	150/175

*NOTE: Use higher value for calculation of MCA. Use lower value for calculation of MOP.

APPENDIX B ELECTRICAL DATA

Model Number	Electrical Rating	Compressor			Outdoor Fan Motor			Indoor Fan Motor			Optional Electric Heat			Optional Powered Convienience Outlet	Optional Power Exhaust	Power Supply	
		QTY	RLA	LRA	QTY	HP	FLA	QTY	HP	FLA	Part #	KW*	FLA	FLA	FLA	MCA	MOP
DHC0903L	208/230/3/60	2	12.2	120.4	2	0.33	2.0	1	2.4	8.0	-	-	-	-	-	39.4/39.4	50/50
											-	-	-	9.6/8.7	-	49.0/48.1	60/60
											-	-	-	-	3.3/3.0 (2.4)	42.7/42.4	50/50
											-	-	-	9.6/8.7	3.3/3.0 (2.4)	52.3/51.1	60/60
											EH*D-3M10	7.5/10.0	20.8/24.1	-	-	39.4/40.1	50/50
														9.6/8.7	-	49.0/50.9	60/60
														-	3.3/3.0 (2.4)	42.7/43.8	50/50
														9.6/8.7	3.3/3.0 (2.4)	52.3/54.7	60/60
											EH*D-3M15	11.3/15.0	31.3/36.1	-	-	49.1/55.1	50/60
														9.6/8.7	-	61.1/66.0	70/70
														-	3.3/3.0 (2.4)	53.2/58.9	60/60
														9.6/8.7	3.3/3.0 (2.4)	65.2/69.7	70/70
											EH*D-3M20	15.0/20.0	41.7/48.1	-	-	62.1/70.1	70/80
														9.6/8.7	-	74.1/81.0	80/90
														-	3.3/3.0 (2.4)	66.3/73.9	70/80
														9.6/8.7	3.3/3.0 (2.4)	78.3/84.8	80/90
											EH*D-3M30	21.6/28.8	60.0/69.3	-	-	85.1/96.6	90/100
														9.6/8.7	-	97.1/107	100/110
														-	3.3/3.0 (2.4)	89.2/100	90/110
														9.6/8.7	3.3/3.0 (2.4)	101/111	110/125
											EH*D-3M45	33.8/45.0	93.8/108	-	-	127/145	150/150
														9.6/8.7	-	139/156	150/175
														-	3.3/3.0 (2.4)	131/149	150/150
														9.6/8.7	3.3/3.0 (2.4)	143/160	150/175

*NOTE: Use higher value for calculation of MCA. Use lower value for calculation of MOP.

APPENDIX B ELECTRICAL DATA

Model Number	Electrical Rating	Compressor			Outdoor Fan Motor			Indoor Fan Motor			Optional Electric Heat			Optional Powered Convienience Outlet	Optional Power Exhaust	Power Supply	
		QTY	RLA	LRA	QTY	HP	FLA	QTY	HP	FLA	Part #	KW*	FLA	FLA	FLA	MCA	MOP
DHC0903W	208/230/3/60	2	12.2	120.4	2	0.33	2.0	1	3.5	10.9	-	-	-	-	-	42.3/42.3	50/50
											-	-	-	9.6/8.7	-	51.9/51.0	60/60
											-	-	-	-	3.3/3.0 (2.4)	45.6/45.3	50/50
											-	-	-	9.6/8.7	3.3/3.0 (2.4)	55.2/54.0	60/60
											EH*D-3M10	7.5/10.0	20.8/24.1	-	-	42.3/43.7	50/50
														9.6/8.7	-	51.9/54.6	60/60
														-	3.3/3.0 (2.4)	45.6/47.4	50/50
														9.6/8.7	3.3/3.0 (2.4)	55.8/58.3	60/60
											EH*D-3M15	11.3/15.0	31.3/36.1	-	-	52.7/58.7	60/60
														9.6/8.7	-	64.7/69.6	70/70
														-	3.3/3.0 (2.4)	56.9/62.5	60/70
														9.6/8.7	3.3/3.0 (2.4)	68.9/73.4	70/80
											EH*D-3M20	15.0/20.0	41.7/48.1	-	-	65.7/73.8	70/80
														9.6/8.7	-	77.7/84.6	80/90
														-	3.3/3.0 (2.4)	69.9/77.5	70/80
														9.6/8.7	3.3/3.0 (2.4)	81.9/88.4	90/90
											EH*D-3M30	21.6/28.8	60.0/69.3	-	-	88.7/100	90/110
														9.6/8.7	-	101/111	110/125
														-	3.3/3.0 (2.4)	92.8/104	100/110
														9.6/8.7	3.3/3.0 (2.4)	105/115	110/125
											EH*D-3M45	33.8/45.0	93.8/108	-	-	131/149	150/150
														9.6/8.7	-	143/160	150/175
														-	3.3/3.0 (2.4)	135/153	150/175
														9.6/8.7	3.3/3.0 (2.4)	147/164	150/175
DHC0904D	460/3/60	2	5.8	55.1	2	0.33	0.85	1	1.7	4.0	-	-	-	-	-	18.7	20
											-	-	-	4.3	-	23.0	25
											-	-	-	-	1.2 (1.0)	19.9	25
											-	-	-	4.3	1.2 (1.0)	24.2	25
											EH*D-4M10	10	12	-	-	20.0	25
														4.3	-	25.4	30
														-	1.2 (1.0)	21.5	25
														4.3	1.2 (1.0)	26.9	30
											EH*D-4M15	15	18	-	-	27.6	30
														4.3	-	32.9	35
														-	1.2 (1.0)	29.1	30
														4.3	1.2 (1.0)	34.4	35
											EH*D-4M20	20	24.1	-	-	35.1	40
														4.3	-	40.4	45
														-	1.2 (1.0)	36.6	40
														4.3	1.2 (1.0)	41.9	45
											EH*D-4M30	28.8	34.6	-	-	48.3	50
														4.3	-	53.7	60
														-	1.2 (1.0)	49.8	50
														4.3	1.2 (1.0)	55.2	60
											EH*D-4M45	45	54.1	-	-	72.7	80
														4.3	-	78.0	80
														-	1.2 (1.0)	74.2	80
														4.3	1.2 (1.0)	79.5	80

*NOTE: Use higher value for calculation of MCA. Use lower value for calculation of MOP.

APPENDIX B ELECTRICAL DATA

Model Number	Electrical Rating	Compressor			Outdoor Fan Motor			Indoor Fan Motor			Optional Electric Heat			Optional Powered Convienience Outlet	Optional Power Exhaust	Power Supply	
		QTY	RLA	LRA	QTY	HP	FLA	QTY	HP	FLA	Part #	KW*	FLA	FLA	FLA	MCA	MOP
DHC0904L	460/3/60	2	5.8	55.1	2	0.33	0.85	1	2.4	5.4	-	-	-	-	-	20.1	25
											-	-	-	4.3	-	24.4	30
											-	-	-	-	1.2 (1.0)	21.3	25
											-	-	-	4.3	1.2 (1.0)	25.6	30
											EH*D-4M10	10	12	-	-	21.8	25
														4.3	-	27.2	30
														-	1.2 (1.0)	23.3	25
														4.3	1.2 (1.0)	28.7	30
											EH*D-4M15	15	18	-	-	29.3	30
														4.3	-	34.7	35
														-	1.2 (1.0)	30.8	35
														4.3	1.2 (1.0)	36.2	40
											EH*D-4M20	20	24.1	-	-	36.8	40
														4.3	-	42.2	45
														-	1.2 (1.0)	38.3	40
														4.3	1.2 (1.0)	43.7	45
											EH*D-4M30	28.8	34.6	-	-	50.1	60
														4.3	-	55.4	60
														-	1.2 (1.0)	51.6	60
														4.3	1.2 (1.0)	56.9	60
											EH*D-4M45	45	54.1	-	-	74.4	80
														4.3	-	79.8	80
														-	1.2 (1.0)	75.9	80
														4.3	1.2 (1.0)	81.3	90
DHC0904W	460/3/60	2	5.8	55.1	2	0.33	0.85	1	3.5	7.2	-	-	-	-	-	21.9	25
											-	-	-	4.3	-	26.2	30
											-	-	-	-	1.2 (1.0)	23.1	30
											-	-	-	4.3	1.2 (1.0)	27.4	30
											EH*D-4M10	10	12	-	-	24.0	25
														4.3	-	29.4	30
														-	1.2 (1.0)	25.5	30
														4.3	1.2 (1.0)	30.9	35
											EH*D-4M15	15	18	-	-	31.6	35
														4.3	-	36.9	40
														-	1.2 (1.0)	33.1	35
														4.3	1.2 (1.0)	38.4	40
											EH*D-4M20	20	24.1	-	-	39.1	40
														4.3	-	44.4	45
														-	1.2 (1.0)	40.6	45
														4.3	1.2 (1.0)	45.9	50
											EH*D-4M30	28.8	34.6	-	-	52.3	60
														4.3	-	57.7	60
														-	1.2 (1.0)	53.8	60
														4.3	1.2 (1.0)	59.2	60
											EH*D-4M45	45	54.1	-	-	76.7	80
														4.3	-	82.0	90
														-	1.2 (1.0)	78.2	80
														4.3	1.2 (1.0)	83.5	90

*NOTE: Use higher value for calculation of MCA. Use lower value for calculation of MOP.

APPENDIX B ELECTRICAL DATA

Model Number	Electrical Rating	Compressor			Outdoor Fan Motor			Indoor Fan Motor			Optional Electric Heat			Optional Powered Convienience Outlet	Optional Power Exhaust	Power Supply	
		QTY	RLA	LRA	QTY	HP	FLA	QTY	HP	FLA	Part #	KW*	FLA	FLA	FLA	MCA	MOP
DHC0907D	575/3/60	2	5.8	41.0	2	0.33	0.67	1	1.7	2.9	-	-	-	-	-	17.2	20
											-	-	-	3.5	-	20.7	25
											-	-	-	-	1.3	18.5	20
											-	-	-	3.5	1.3	22.0	25
											EH*D-7M10	10	9.62	-	-	17.2	20
														3.5	-	20.7	25
														-	1.3	18.5	20
														3.5	1.3	22.0	25
											EH*D-7M15	15	14.4	-	-	21.7	25
														3.5	-	26.0	30
														-	1.3	23.3	25
														3.5	1.3	27.7	30
											EH*D-7M20	20	19.2	-	-	27.7	30
														3.5	-	32.1	35
														-	1.3	29.3	30
														3.5	1.3	33.7	35
											EH*D-7M30	28.8	27.7	-	-	38.3	40
														3.5	-	42.6	45
														-	1.3	39.9	40
														3.5	1.3	44.3	45
											EH*D-7M45	45	43.3	-	-	57.8	60
														3.5	-	62.1	70
														-	1.3	59.4	60
														3.5	1.3	63.8	70
DHC0907L	575/3/60	2	5.8	41.0	2	0.33	0.67	1	2.4	4.0	-	-	-	-	-	18.3	20
											-	-	-	3.5	-	21.8	25
											-	-	-	-	1.3	19.6	25
											-	-	-	3.5	1.3	23.1	25
											EH*D-7M10	10	9.62	-	-	18.3	20
														3.5	-	21.8	25
														-	1.3	19.6	25
														3.5	1.3	23.1	25
											EH*D-7M15	15	14.4	-	-	23.0	25
														3.5	-	27.4	30
														-	1.3	24.7	25
														3.5	1.3	29.0	30
											EH*D-7M20	20	19.2	-	-	29.1	30
														3.5	-	33.4	35
														-	1.3	30.7	35
														3.5	1.3	35.1	40
											EH*D-7M30	28.8	27.7	-	-	39.6	40
														3.5	-	44.0	45
														-	1.3	41.3	45
														3.5	1.3	45.6	50
											EH*D-7M45	45	43.3	-	-	59.1	60
														3.5	-	63.5	70
														-	1.3	60.8	70
														3.5	1.3	65.1	70

*NOTE: Use higher value for calculation of MCA. Use lower value for calculation of MOP.

APPENDIX B ELECTRICAL DATA

Model Number	Electrical Rating	Compressor			Outdoor Fan Motor			Indoor Fan Motor			Optional Electric Heat			Optional Powered Convienience Outlet	Optional Power Exhaust	Power Supply	
		QTY	RLA	LRA	QTY	HP	FLA	QTY	HP	FLA	Part #	KW*	FLA	FLA	FLA	MCA	MOP
DHC0907W	575/3/60	2	5.8	41.0	2	0.33	0.67	1	3.5	5.0	-	-	-	-	-	19.3	25
											-	-	-	3.5	-	22.8	25
											-	-	-	-	1.3	20.6	25
											-	-	-	3.5	1.3	24.1	25
											EH*D-7M10	10	9.62	-	-	19.3	25
														3.5	-	22.8	25
														-	1.3	20.6	25
														3.5	1.3	24.3	25
											EH*D-7M15	15	14.4	-	-	24.3	25
														3.5	-	28.7	30
														-	1.3	25.9	30
														3.5	1.3	30.3	35
											EH*D-7M20	20	19.2	-	-	30.3	35
														3.5	-	34.7	35
														-	1.3	31.9	35
														3.5	1.3	36.3	40
											EH*D-7M30	28.8	27.7	-	-	40.9	45
														3.5	-	45.3	50
														-	1.3	42.5	45
														3.5	1.3	46.9	50
											EH*D-7M45	45	43.3	-	-	60.4	70
														3.5	-	64.8	70
														-	1.3	62.0	70
														3.5	1.3	66.4	70
DHC1023D	208/230/3/60	2	14.1	120.4	2	0.33	2	1	2.4	8.0	-	-	-	-	-	43.7/43.7	50/50
											-	-	-	9.6/8.7	-	53.3/52.4	60/60
											-	-	-	-	3.3/3.0 (2.4)	47.0/46.7	60/60
											-	-	-	9.6/8.7	3.3/3.0 (2.4)	56.6/55.4	60/60
											EH*D-3M10	7.5/10.0	20.8/24.1	-	-	43.7/43.7	50/50
														9.6/8.7	-	53.3/52.4	60/60
														-	3.3/3.0 (2.4)	47.0/46.7	60/60
														9.6/8.7	3.3/3.0 (2.4)	56.6/55.4	60/60
											EH*D-3M15	11.3/15.0	31.3/36.1	-	-	49.1/55.1	50/60
														9.6/8.7	-	61.1/66.0	70/70
														-	3.3/3.0 (2.4)	53.2/58.9	60/60
														9.6/8.7	3.3/3.0 (2.4)	65.2/69.7	70/70
											EH*D-3M20	15.0/20.0	41.7/48.1	-	-	62.1/70.1	70/80
														9.6/8.7	-	74.1/81.0	80/90
														-	3.3/3.0 (2.4)	66.3/73.9	70/80
														9.6/8.7	3.3/3.0 (2.4)	78.3/84.8	80/90
											EH*D-3M30	21.6/28.8	60.0/69.3	-	-	85.1/96.6	90/100
														9.6/8.7	-	97.1/107	100/110
														-	3.3/3.0 (2.4)	89.2/100	90/110
														9.6/8.7	3.3/3.0 (2.4)	101/111	110/125
											EH*D-3M45	33.8/45.0	93.8/108	-	-	127/145	150/150
														9.6/8.7	-	139/156	150/175
														-	3.3/3.0 (2.4)	131/149	150/150
														9.6/8.7	3.3/3.0 (2.4)	143/160	150/175

*NOTE: Use higher value for calculation of MCA. Use lower value for calculation of MOP.

APPENDIX B ELECTRICAL DATA

Model Number	Electrical Rating	Compressor			Outdoor Fan Motor			Indoor Fan Motor			Optional Electric Heat			Optional Powered Convienience Outlet	Optional Power Exhaust	Power Supply	
		QTY	RLA	LRA	QTY	HP	FLA	QTY	HP	FLA	Part #	KW*	FLA	FLA	FLA	MCA	MOP
DHC1023L	208/230/3/60	2	14.1	120.4	2	0.33	2	1	2.4	8.0	-	-	-	-	-	43.7/43.7	50/50
											-	-	-	9.6/8.7	-	53.3/52.4	60/60
											-	-	-	-	3.3/3.0 (2.4)	47.0/46.7	60/60
											-	-	-	9.6/8.7	3.3/3.0 (2.4)	56.6/55.4	60/60
											EH*D-3M10	7.5/10.0	20.8/24.1	-	-	43.7/43.7	50/50
														9.6/8.7	-	53.3/52.4	60/60
														-	3.3/3.0 (2.4)	47.0/46.7	60/60
														9.6/8.7	3.3/3.0 (2.4)	56.6/55.4	60/60
											EH*D-3M15	11.3/15.0	31.3/36.1	-	-	49.1/55.1	50/60
														9.6/8.7	-	61.1/66.0	70/70
														-	3.3/3.0 (2.4)	53.2/58.9	60/60
														9.6/8.7	3.3/3.0 (2.4)	65.2/69.7	70/70
											EH*D-3M20	15.0/20.0	41.7/48.1	-	-	62.1/70.1	70/80
														9.6/8.7	-	74.1/81.0	80/90
														-	3.3/3.0 (2.4)	66.3/73.9	70/80
														9.6/8.7	3.3/3.0 (2.4)	78.3/84.8	80/90
											EH*D-3M30	21.6/28.8	60.0/69.3	-	-	85.1/96.6	90/100
														9.6/8.7	-	97.1/107	100/110
														-	3.3/3.0 (2.4)	89.2/100	90/110
														9.6/8.7	3.3/3.0 (2.4)	101/111	110/125
											EH*D-3M45	33.8/45.0	93.8/108	-	-	127/145	150/150
														9.6/8.7	-	139/156	150/175
														-	3.3/3.0 (2.4)	131/149	150/150
														9.6/8.7	3.3/3.0 (2.4)	143/160	150/175

*NOTE: Use higher value for calculation of MCA. Use lower value for calculation of MOP.

APPENDIX B ELECTRICAL DATA

Model Number	Electrical Rating	Compressor			Outdoor Fan Motor			Indoor Fan Motor			Optional Electric Heat			Optional Powered Convienience Outlet	Optional Power Exhaust	Power Supply	
		QTY	RLA	LRA	QTY	HP	FLA	QTY	HP	FLA	Part #	KW*	FLA	FLA	FLA	MCA	MOP
DHC1023W	208/230/3/60	2	14.1	120.4	2	0.33	2.0	1	3.5	10.9	-	-	-	-	-	46.6/46.6	60/60
											-	-	-	9.6/8.7	-	56.2/55.3	70/60
											-	-	-	-	3.3/3.0 (2.4)	49.9/49.6	60/60
											-	-	-	9.6/8.7	3.3/3.0 (2.4)	59.5/58.3	70/70
											EH*D-3M10	7.5/10.0	20.8/24.1	-	-	46.6/46.6	60/60
														9.6/8.7	-	56.2/55.3	70/60
														-	3.3/3.0 (2.4)	49.9/49.6	60/60
														9.6/8.7	3.3/3.0 (2.4)	59.5/58.3	70/70
											EH*D-3M15	11.3/15.0	31.3/36.1	-	-	52.7/58.7	60/60
														9.6/8.7	-	64.7/69.6	70/70
														-	3.3/3.0 (2.4)	56.9/62.5	60/70
														9.6/8.7	3.3/3.0 (2.4)	68.9/73.4	70/80
											EH*D-3M20	15.0/20.0	41.7/48.1	-	-	65.7/73.8	70/80
														9.6/8.7	-	77.7/84.6	80/90
														-	3.3/3.0 (2.4)	69.9/77.5	70/80
														9.6/8.7	3.3/3.0 (2.4)	81.9/88.4	90/90
											EH*D-3M30	21.6/28.8	60.0/69.3	-	-	88.7/100	90/110
														9.6/8.7	-	101/111	110/125
														-	3.3/3.0 (2.4)	92.8/104	100/110
														9.6/8.7	3.3/3.0 (2.4)	105/115	110/125
											EH*D-3M45	33.8/45.0	93.8/108	-	-	131/149	150/150
														9.6/8.7	-	143/160	150/175
														-	3.3/3.0 (2.4)	135/153	150/175
														9.6/8.7	3.3/3.0 (2.4)	147/164	150/175
DHC1024D	460/3/60	2	6.4	55.1	2	0.33	0.85	1	2.4	5.4	-	-	-	-	-	21.5	25
											-	-	-	4.3	-	25.8	30
											-	-	-	-	1.2 (1.0)	22.7	25
											-	-	-	4.3	1.2 (1.0)	27.0	30
											EH*D-4M10	10	12	-	-	21.8	25
														4.3	-	27.2	30
														-	1.2 (1.0)	23.3	25
														4.3	1.2 (1.0)	28.7	30
											EH*D-4M15	15	18	-	-	29.3	30
														4.3	-	34.7	35
														-	1.2 (1.0)	30.8	35
														4.3	1.2 (1.0)	36.2	40
											EH*D-4M20	20	24.1	-	-	36.8	40
														4.3	-	42.2	45
														-	1.2 (1.0)	38.3	40
														4.3	1.2 (1.0)	43.7	45
											EH*D-4M30	28.8	34.6	-	-	50.1	60
														4.3	-	55.4	60
														-	1.2 (1.0)	51.6	60
														4.3	1.2 (1.0)	56.9	60
											EH*D-4M45	45	54.1	-	-	74.4	80
														4.3	-	79.8	80
														-	1.2 (1.0)	75.9	80
														4.3	1.2 (1.0)	81.3	90

*NOTE: Use higher value for calculation of MCA. Use lower value for calculation of MOP.

APPENDIX B ELECTRICAL DATA

Model Number	Electrical Rating	Compressor			Outdoor Fan Motor			Indoor Fan Motor			Optional Electric Heat			Optional Powered Convienience Outlet	Optional Power Exhaust	Power Supply	
		QTY	RLA	LRA	QTY	HP	FLA	QTY	HP	FLA	Part #	KW*	FLA	FLA	FLA	MCA	MOP
DHC1024L	460/3/60	2	6.4	55.1	2	0.33	0.85	1	2.4	5.4	-	-	-	-	-	21.5	25
											-	-	-	4.3	-	25.8	30
											-	-	-	-	1.2 (1.0)	22.7	25
											-	-	-	4.3	1.2 (1.0)	27.0	30
											EH*D-4M10	10	12	-	-	21.8	25
														4.3	-	27.2	30
														-	1.2 (1.0)	23.3	25
														4.3	1.2 (1.0)	28.7	30
											EH*D-4M15	15	18	-	-	29.3	30
														4.3	-	34.7	35
														-	1.2 (1.0)	30.8	35
														4.3	1.2 (1.0)	36.2	40
											EH*D-4M20	20	24.1	-	-	36.8	40
														4.3	-	42.2	45
														-	1.2 (1.0)	38.3	40
														4.3	1.2 (1.0)	43.7	45
											EH*D-4M30	28.8	34.6	-	-	50.1	60
														4.3	-	55.4	60
														-	1.2 (1.0)	51.6	60
														4.3	1.2 (1.0)	56.9	60
											EH*D-4M45	45	54.1	-	-	74.4	80
														4.3	-	79.8	80
														-	1.2 (1.0)	75.9	80
														4.3	1.2 (1.0)	81.3	90
DHC1024W	460/3/60	2	6.4	55.1	2	0.33	0.85	1	3.5	7.2	-	-	-	-	-	23.3	30
											-	-	-	4.3	-	27.6	35
											-	-	-	-	1.2 (1.0)	24.5	30
											-	-	-	4.3	1.2 (1.0)	28.8	35
											EH*D-4M10	10	12	-	-	24.0	30
														4.3	-	29.4	35
														-	1.2 (1.0)	25.5	30
														4.3	1.2 (1.0)	30.9	35
											EH*D-4M15	15	18	-	-	31.6	35
														4.3	-	36.9	40
														-	1.2 (1.0)	33.1	35
														4.3	1.2 (1.0)	38.4	40
											EH*D-4M20	20	24.1	-	-	39.1	40
														4.3	-	44.4	45
														-	1.2 (1.0)	40.6	45
														4.3	1.2 (1.0)	45.9	50
											EH*D-4M30	28.8	34.6	-	-	52.3	60
														4.3	-	57.7	60
														-	1.2 (1.0)	53.8	60
														4.3	1.2 (1.0)	59.2	60
											EH*D-4M45	45	54.1	-	-	76.7	80
														4.3	-	82.0	90
														-	1.2 (1.0)	78.2	80
														4.3	1.2 (1.0)	83.5	90

*NOTE: Use higher value for calculation of MCA. Use lower value for calculation of MOP.

APPENDIX B ELECTRICAL DATA

Model Number	Electrical Rating	Compressor			Outdoor Fan Motor			Indoor Fan Motor			Optional Electric Heat			Optional Powered Convienience Outlet	Optional Power Exhaust	Power Supply	
		QTY	RLA	LRA	QTY	HP	FLA	QTY	HP	FLA	Part #	KW*	FLA	FLA	FLA	MCA	MOP
DHC1027D	575/3/60	2	5.1	41.0	2	0.33	0.67	1	2.4	4.0	-	-	-	-	-	16.9	20
											-	-	-	3.5	-	20.4	25
											-	-	-	-	1.3	18.2	20
											-	-	-	3.5	1.3	21.7	25
											EH*D-7M10	10	9.62	-	-	17.0	20
														3.5	-	21.4	25
														-	1.3	18.7	20
														3.5	1.3	23.0	25
											EH*D-7M15	15	14.4	-	-	23.0	25
														3.5	-	27.4	30
														-	1.3	24.7	25
														3.5	1.3	29.0	30
											EH*D-7M20	20	19.2	-	-	29.1	30
														3.5	-	33.4	35
														-	1.3	30.7	35
														3.5	1.3	35.1	40
											EH*D-7M30	28.8	27.7	-	-	39.6	40
														3.5	-	44.0	45
														-	1.3	41.3	45
														3.5	1.3	45.6	50
											EH*D-7M45	45	43.3	-	-	59.1	60
														3.5	-	63.5	70
														-	1.3	60.8	70
														3.5	1.3	65.1	70
DHC1027L	575/3/60	2	5.1	41.0	2	0.33	0.67	1	2.4	4.0	-	-	-	-	-	16.9	20
											-	-	-	3.5	-	20.4	25
											-	-	-	-	1.3	18.2	20
											-	-	-	3.5	1.3	21.7	25
											EH*D-7M10	10	9.62	-	-	17.0	20
														3.5	-	21.4	25
														-	1.3	18.7	20
														3.5	1.3	23.0	25
											EH*D-7M15	15	14.4	-	-	23.0	25
														3.5	-	27.4	30
														-	1.3	24.7	25
														3.5	1.3	29.0	30
											EH*D-7M20	20	19.2	-	-	29.1	30
														3.5	-	33.4	35
														-	1.3	30.7	35
														3.5	1.3	35.1	40
											EH*D-7M30	28.8	27.7	-	-	39.6	40
														3.5	-	44.0	45
														-	1.3	41.3	45
														3.5	1.3	45.6	50
											EH*D-7M45	45	43.3	-	-	59.1	60
														3.5	-	63.5	70
														-	1.3	60.8	70
														3.5	1.3	65.1	70

*NOTE: Use higher value for calculation of MCA. Use lower value for calculation of MOP.

APPENDIX B ELECTRICAL DATA

Model Number	Electrical Rating	Compressor			Outdoor Fan Motor			Indoor Fan Motor			Optional Electric Heat			Optional Powered Convienience Outlet	Optional Power Exhaust	Power Supply	
		QTY	RLA	LRA	QTY	HP	FLA	QTY	HP	FLA	Part #	KW*	FLA	FLA	FLA	MCA	MOP
DHC1027W	575/3/60	2	5.1	41.0	2	0.33	0.67	1	3.5	5.0	-	-	-	-	-	17.9	20
											-	-	-	3.5	-	21.4	25
											-	-	-	-	1.3	19.2	20
											-	-	-	3.5	1.3	22.7	25
											EH*D-7M10	10	9.62	-	-	18.3	20
														3.5	-	22.7	25
														-	1.3	19.9	20
														3.5	1.3	24.3	25
											EH*D-7M15	15	14.4	-	-	24.3	25
														3.5	-	28.7	30
														-	1.3	25.9	30
														3.5	1.3	30.3	35
											EH*D-7M20	20	19.2	-	-	30.3	35
														3.5	-	34.7	35
														-	1.3	31.9	35
														3.5	1.3	36.3	40
											EH*D-7M30	28.8	27.7	-	-	40.9	45
														3.5	-	45.3	50
														-	1.3	42.5	45
														3.5	1.3	46.9	50
											EH*D-7M45	45	43.3	-	-	60.4	70
														3.5	-	64.8	70
														-	1.3	62.0	70
														3.5	1.3	66.4	70
DHC1203D	208/230/3/60	2	15.4	156.4	2	0.33	2	1	2.4	8.0	-	-	-	-	-	46.6/46.6	60/60
											-	-	-	9.6/8.7	-	56.2/55.3	70/70
											-	-	-	-	3.3/3.0 (2.4)	49.9/49.6	60/60
											-	-	-	9.6/8.7	3.3/3.0 (2.4)	59.5/58.3	70/70
											EH*D-3M10	7.5/10.0	20.8/24.1	-	-	46.6/46.6	60/60
														9.6/8.7	-	56.2/55.3	70/70
														-	3.3/3.0 (2.4)	49.9/49.6	60/60
														9.6/8.7	3.3/3.0 (2.4)	59.5/58.3	70/70
											EH*D-3M15	11.3/15.0	31.3/36.1	-	-	49.1/55.1	60/60
														9.6/8.7	-	61.1/66.0	70/70
														-	3.3/3.0 (2.4)	53.2/58.9	60/60
														9.6/8.7	3.3/3.0 (2.4)	65.2/69.7	70/70
											EH*D-3M20	15.0/20.0	41.7/48.1	-	-	62.1/70.1	70/80
														9.6/8.7	-	74.1/81.0	80/90
														-	3.3/3.0 (2.4)	66.3/73.9	70/80
														9.6/8.7	3.3/3.0 (2.4)	78.3/84.8	80/90
											EH*D-3M30	21.6/28.8	60.0/69.3	-	-	85.1/96.6	90/100
														9.6/8.7	-	97.1/107	100/110
														-	3.3/3.0 (2.4)	89.2/100	90/110
														9.6/8.7	3.3/3.0 (2.4)	101/111	110/125
											EH*D-3M45	33.8/45.0	93.8/108	-	-	127/145	150/150
														9.6/8.7	-	139/156	150/175
														-	3.3/3.0 (2.4)	131/149	150/150
														9.6/8.7	3.3/3.0 (2.4)	143/160	150/175
											EH*D-3M60	43.3/57.6	120/139	-	-	160/149	175/175
														9.6/8.7	-	172/159	175/175
														-	3.3/3.0 (2.4)	164/152	175/175
														9.6/8.7	3.3/3.0 (2.4)	176/163	200/175

*NOTE: Use higher value for calculation of MCA. Use lower value for calculation of MOP.

APPENDIX B ELECTRICAL DATA

Model Number	Electrical Rating	Compressor			Outdoor Fan Motor			Indoor Fan Motor			Optional Electric Heat			Optional Powered Convienience Outlet	Optional Power Exhaust	Power Supply	
		QTY	RLA	LRA	QTY	HP	FLA	QTY	HP	FLA	Part #	KW*	FLA	FLA	FLA	MCA	MOP
DHC1203L	208/230/3/60	2	15.4	156.4	2	0.33	2.0	1	3.5	10.9	-	-	-	-	-	49.5/49.5	60/60
											-	-	-	9.6/8.7	-	59.1/58.2	70/70
											-	-	-	-	3.3/3.0 (2.4)	52.8/52.5	60/60
											-	-	-	9.6/8.7	3.3/3.0 (2.4)	62.4/61.2	70/70
											EH*D-3M10	7.5/10.0	20.8/24.1	-	-	49.5/49.5	60/60
														9.6/8.7	-	59.1/58.2	70/70
														-	3.3/3.0 (2.4)	52.8/52.5	60/60
														9.6/8.7	3.3/3.0 (2.4)	62.4/61.2	70/70
											EH*D-3M15	11.3/15.0	31.3/36.1	-	-	52.7/58.7	60/60
														9.6/8.7	-	64.7/69.6	70/70
														-	3.3/3.0 (2.4)	56.9/62.5	60/70
														9.6/8.7	3.3/3.0 (2.4)	68.9/73.4	70/80
											EH*D-3M20	15.0/20.0	41.7/48.1	-	-	65.7/73.8	70/80
														9.6/8.7	-	77.7/84.6	80/90
														-	3.3/3.0 (2.4)	69.9/77.5	70/80
														9.6/8.7	3.3/3.0 (2.4)	81.9/88.4	90/90
											EH*D-3M30	21.6/28.8	60.0/69.3	-	-	88.7/100	90/110
														9.6/8.7	-	101/111	110/125
														-	3.3/3.0 (2.4)	92.8/104	100/110
														9.6/8.7	3.3/3.0 (2.4)	105/115	110/125
											EH*D-3M45	33.8/45.0	93.8/108	-	-	131/149	150/150
														9.6/8.7	-	143/160	150/175
														-	3.3/3.0 (2.4)	135/153	150/175
														9.6/8.7	3.3/3.0 (2.4)	147/164	150/175
											EH*D-3M60	43.3/57.6	120/139	-	-	164/152	175/175
														9.6/8.7	-	176/163	200/175
														-	3.3/3.0 (2.4)	168/156	175/175
														9.6/8.7	3.3/3.0 (2.4)	180/167	200/175

*NOTE: Use higher value for calculation of MCA. Use lower value for calculation of MOP.

APPENDIX B ELECTRICAL DATA

Model Number	Electrical Rating	Compressor			Outdoor Fan Motor			Indoor Fan Motor			Optional Electric Heat			Optional Powered Convienience Outlet	Optional Power Exhaust	Power Supply	
		QTY	RLA	LRA	QTY	HP	FLA	QTY	HP	FLA	Part #	KW*	FLA	FLA	FLA	MCA	MOP
DHC1203W	208/230/3/60	2	15.4	156.4	2	0.33	2.0	1	3.5	10.9	-	-	-	-	-	49.5/49.5	60/60
											-	-	-	9.6/8.7	-	59.1/58.2	70/70
											-	-	-	-	3.3/3.0 (2.4)	52.8/52.5	60/60
											-	-	-	9.6/8.7	3.3/3.0 (2.4)	62.4/61.2	70/70
											EH*D-3M10	7.5/10.0	20.8/24.1	-	-	49.5/49.5	60/60
														9.6/8.7	-	59.1/58.2	70/70
														-	3.3/3.0 (2.4)	52.8/52.5	60/60
														9.6/8.7	3.3/3.0 (2.4)	62.4/61.2	70/70
											EH*D-3M15	11.3/15.0	31.3/36.1	-	-	52.7/58.7	60/60
														9.6/8.7	-	64.7/69.6	70/70
														-	3.3/3.0 (2.4)	56.9/62.5	60/70
														9.6/8.7	3.3/3.0 (2.4)	68.9/73.4	70/80
											EH*D-3M20	15.0/20.0	41.7/48.1	-	-	65.7/73.8	70/80
														9.6/8.7	-	77.7/84.6	80/90
														-	3.3/3.0 (2.4)	69.9/77.5	70/80
														9.6/8.7	3.3/3.0 (2.4)	81.9/88.4	90/90
											EH*D-3M30	21.6/28.8	60.0/69.3	-	-	88.7/100	90/110
														9.6/8.7	-	101/111	110/125
														-	3.3/3.0 (2.4)	92.8/104	100/110
														9.6/8.7	3.3/3.0 (2.4)	105/115	110/125
											EH*D-3M45	33.8/45.0	93.8/108	-	-	131/149	150/150
														9.6/8.7	-	143/160	150/175
														-	3.3/3.0 (2.4)	135/153	150/175
														9.6/8.7	3.3/3.0 (2.4)	147/164	150/175
											EH*D-3M60	43.3/57.6	120/139	-	-	164/152	175/175
														9.6/8.7	-	176/163	200/175
														-	3.3/3.0 (2.4)	168/156	175/175
														9.6/8.7	3.3/3.0 (2.4)	180/167	200/175

*NOTE: Use higher value for calculation of MCA. Use lower value for calculation of MOP.

APPENDIX B ELECTRICAL DATA

Model Number	Electrical Rating	Compressor			Outdoor Fan Motor			Indoor Fan Motor			Optional Electric Heat			Optional Powered Convienience Outlet	Optional Power Exhaust	Power Supply	
		QTY	RLA	LRA	QTY	HP	FLA	QTY	HP	FLA	Part #	KW*	FLA	FLA	FLA	MCA	MOP
DHC1204D	460/3/60	2	7.7	69	2	0.33	0.85	1	2.4	5.4	-	-	-	-	-	24.4	30
											-	-	-	4.3	-	28.7	35
											-	-	-	-	1.2 (1.0)	25.6	30
											-	-	-	4.3	1.2 (1.0)	29.9	35
											EH*D-4M10	10	12	-	-	24.4	30
														4.3	-	28.7	35
														-	1.2 (1.0)	25.6	30
														4.3	1.2 (1.0)	29.9	35
											EH*D-4M15	15	18	-	-	29.3	30
														4.3	-	34.7	35
														-	1.2 (1.0)	30.8	35
														4.3	1.2 (1.0)	36.2	40
											EH*D-4M20	20	24.1	-	-	36.8	40
														4.3	-	42.2	45
														-	1.2 (1.0)	38.3	40
														4.3	1.2 (1.0)	43.7	45
											EH*D-4M30	28.8	34.6	-	-	50.1	60
														4.3	-	55.4	60
														-	1.2 (1.0)	51.6	60
														4.3	1.2 (1.0)	56.9	60
											EH*D-4M45	45	54.1	-	-	74.4	80
														4.3	-	79.8	80
														-	1.2 (1.0)	75.9	80
														4.3	1.2 (1.0)	81.3	90
											EH*D-4M60	57.6	69.3	-	-	76.0	90
														4.3	-	81.4	90
														-	1.2 (1.0)	77.5	90
														4.3	1.2 (1.0)	82.9	90
DHC1204L	460/3/60	2	7.7	69.0	2	0.33	0.85	1	3.5	7.2	-	-	-	-	-	26.2	30
											-	-	-	4.3	-	30.5	35
											-	-	-	-	1.2 (1.0)	27.4	30
											-	-	-	4.3	1.2 (1.0)	31.7	35
											EH*D-4M10	10	12	-	-	26.2	30
														4.3	-	30.5	35
														-	1.2 (1.0)	27.4	30
														4.3	1.2 (1.0)	31.7	35
											EH*D-4M15	15	18	-	-	31.6	35
														4.3	-	36.9	40
														-	1.2 (1.0)	33.1	35
														4.3	1.2 (1.0)	38.4	40
											EH*D-4M20	20	24.1	-	-	39.1	40
														4.3	-	44.4	45
														-	1.2 (1.0)	40.6	45
														4.3	1.2 (1.0)	45.9	50
											EH*D-4M30	28.8	34.6	-	-	52.3	60
														4.3	-	57.7	60
														-	1.2 (1.0)	53.8	60
														4.3	1.2 (1.0)	59.2	60
											EH*D-4M45	45	54.1	-	-	76.7	80
														4.3	-	82.0	90
														-	1.2 (1.0)	78.2	80
														4.3	1.2 (1.0)	83.5	90
											EH*D-4M60	57.6	69.3	-	-	78.3	90
														4.3	-	83.7	90
														-	1.2 (1.0)	79.8	90
														4.3	1.2 (1.0)	85.2	90

*NOTE: Use higher value for calculation of MCA. Use lower value for calculation of MOP.

APPENDIX B ELECTRICAL DATA

Model Number	Electrical Rating	Compressor			Outdoor Fan Motor			Indoor Fan Motor			Optional Electric Heat			Optional Powered Convienience Outlet	Optional Power Exhaust	Power Supply	
		QTY	RLA	LRA	QTY	HP	FLA	QTY	HP	FLA	Part #	KW*	FLA	FLA	FLA	MCA	MOP
DHC1204W	460/3/60	2	7.7	69.0	2	0.33	0.85	1	3.5	7.2	-	-	-	-	-	26.2	30
											-	-	-	4.3	-	30.5	35
											-	-	-	-	1.2 (1.0)	27.4	30
											-	-	-	4.3	1.2 (1.0)	31.7	35
											EH*D-4M10	10	12	-	-	26.2	30
														4.3	-	30.5	35
														-	1.2 (1.0)	27.4	30
														4.3	1.2 (1.0)	31.7	35
											EH*D-4M15	15	18	-	-	31.6	35
														4.3	-	36.9	40
														-	1.2 (1.0)	33.1	35
														4.3	1.2 (1.0)	38.4	40
											EH*D-4M20	20	24.1	-	-	39.1	40
														4.3	-	44.4	45
														-	1.2 (1.0)	40.6	45
														4.3	1.2 (1.0)	45.9	50
											EH*D-4M30	28.8	34.6	-	-	52.3	60
														4.3	-	57.7	60
														-	1.2 (1.0)	53.8	60
														4.3	1.2 (1.0)	59.2	60
											EH*D-4M45	45	54.1	-	-	76.7	80
														4.3	-	82.0	90
														-	1.2 (1.0)	78.2	80
														4.3	1.2 (1.0)	83.5	90
											EH*D-4M60	57.6	69.3	-	-	78.3	90
														4.3	-	83.7	90
														-	1.2 (1.0)	79.8	90
														4.3	1.2 (1.0)	85.2	90
DHC1207D	575/3/60	2	6.4	47.8	2	0.33	0.67	1	2.4	4.0	-	-	-	-	-	19.7	25
											-	-	-	3.5	-	23.2	25
											-	-	-	-	1.3	21.0	25
											-	-	-	3.5	1.3	24.5	30
											EH*D-7M10	10	9.62	-	-	19.7	25
														3.5	-	23.2	25
														-	1.3	21.0	25
														3.5	1.3	24.5	30
											EH*D-7M15	15	14.4	-	-	23.0	25
														3.5	-	27.4	30
														-	1.3	24.7	25
														3.5	1.3	29.0	30
											EH*D-7M20	20	19.2	-	-	29.1	30
														3.5	-	33.4	35
														-	1.3	30.7	35
														3.5	1.3	35.1	40
											EH*D-7M30	28.8	27.7	-	-	39.6	40
														3.5	-	44.0	45
														-	1.3	41.3	45
														3.5	1.3	45.6	50
											EH*D-7M45	45	43.3	-	-	59.1	60
														3.5	-	63.5	70
														-	1.3	60.8	70
														3.5	1.3	65.1	70
											EH*D-7M60	57.6	55.4	-	-	60.4	70
														3.5	-	64.8	70
														-	1.3	62.1	70
														3.5	1.3	66.4	70

*NOTE: Use higher value for calculation of MCA. Use lower value for calculation of MOP.

APPENDIX B ELECTRICAL DATA

Model Number	Electrical Rating	Compressor			Outdoor Fan Motor			Indoor Fan Motor			Optional Electric Heat			Optional Powered Convienience Outlet	Optional Power Exhaust	Power Supply	
		QTY	RLA	LRA	QTY	HP	FLA	QTY	HP	FLA	Part #	KW*	FLA	FLA	FLA	MCA	MOP
DHC1207L	575/3/60	2	6.4	47.8	2	0.33	0.67	1	3.5	5.0	-	-	-	-	-	20.7	25
											-	-	-	3.5	-	24.2	30
											-	-	-	-	1.3	22.0	25
											-	-	-	3.5	1.3	25.5	30
											EH*D-7M10	10	9.62	-	-	20.7	25
														3.5	-	24.2	30
														-	1.3	22.0	25
														3.5	1.3	25.5	30
											EH*D-7M15	15	14.4	-	-	24.3	25
														3.5	-	28.7	30
														-	1.3	25.9	30
														3.5	1.3	30.3	35
											EH*D-7M20	20	19.2	-	-	30.3	35
														3.5	-	34.7	35
														-	1.3	31.9	35
														3.5	1.3	36.3	40
											EH*D-7M30	28.8	27.7	-	-	40.9	45
														3.5	-	45.3	50
														-	1.3	42.5	45
														3.5	1.3	46.9	50
											EH*D-7M45	45	43.3	-	-	60.4	70
														3.5	-	64.8	70
														-	1.3	62.0	70
														3.5	1.3	66.4	70
											EH*D-7M60	57.6	55.4	-	-	61.7	70
														3.5	-	66.1	70
														-	1.3	63.3	70
														3.5	1.3	67.7	70
DHC1207W	575/3/60	2	6.4	47.8	2	0.33	0.67	1	3.5	5.0	-	-	-	-	-	20.7	25
											-	-	-	3.5	-	24.2	30
											-	-	-	-	1.3	22.0	25
											-	-	-	3.5	1.3	25.5	30
											EH*D-7M10	10	9.62	-	-	20.7	25
														3.5	-	24.2	30
														-	1.3	22.0	25
														3.5	1.3	25.5	30
											EH*D-7M15	15	14.4	-	-	24.3	25
														3.5	-	28.7	30
														-	1.3	25.9	30
														3.5	1.3	30.3	35
											EH*D-7M20	20	19.2	-	-	30.3	35
														3.5	-	34.7	35
														-	1.3	31.9	35
														3.5	1.3	36.3	40
											EH*D-7M30	28.8	27.7	-	-	40.9	45
														3.5	-	45.3	50
														-	1.3	42.5	45
														3.5	1.3	46.9	50
											EH*D-7M45	45	43.3	-	-	60.4	70
														3.5	-	64.8	70
														-	1.3	62.0	70
														3.5	1.3	66.4	70
											EH*D-7M60	57.6	55.4	-	-	61.7	70
														3.5	-	66.1	70
														-	1.3	63.3	70
														3.5	1.3	67.7	70

*NOTE: Use higher value for calculation of MCA. Use lower value for calculation of MOP.

APPENDIX B ELECTRICAL DATA

Model Number	Electrical Rating	Compressor			Outdoor Fan Motor			Indoor Fan Motor			Optional Electric Heat			Optional Powered Convienience Outlet	Optional Power Exhaust	Power Supply	
		QTY	RLA	LRA	QTY	HP	FLA	QTY	HP	FLA	Part #	KW*	FLA	FLA	FLA	MCA	MOP
DHC1503D	208/230/3/60	2	19.2	156.5	2	0.33	3.5	1	3.5	10.9	-	-	-	-	-	61.1/61.1	80/80
											-	-	-	9.6/8.7	-	70.7/69.8	80/80
											-	-	-	-	3.3/3.0 (2.4)	64.4/64.1	80/80
											-	-	-	9.6/8.7	3.3/3.0 (2.4)	74.0/72.8	90/90
											EH*D-3M10	7.5/10.0	20.8/24.1	-	-	61.1/61.1	80/80
														9.6/8.7	-	70.7/69.8	80/80
														-	3.3/3.0 (2.4)	64.4/64.1	80/80
														9.6/8.7	3.3/3.0 (2.4)	74.0/72.8	90/90
											EH*D-3M15	11.3/15.0	31.3/36.1	-	-	61.1/61.1	80/80
														9.6/8.7	-	70.7/69.8	80/80
														-	3.3/3.0 (2.4)	64.4/64.1	80/80
														9.6/8.7	3.3/3.0 (2.4)	74.0/73.4	90/90
											EH*D-3M20	15.0/20.0	41.7/48.1	-	-	65.7/73.8	80/80
														9.6/8.7	-	77.7/84.6	80/90
														-	3.3/3.0 (2.4)	69.9/77.5	80/80
														9.6/8.7	3.3/3.0 (2.4)	81.9/88.4	90/90
											EH*D-3M30	21.6/28.8	60.0/69.3	-	-	88.7/100	90/110
														9.6/8.7	-	101/111	110/125
														-	3.3/3.0 (2.4)	92.8/104	100/110
														9.6/8.7	3.3/3.0 (2.4)	105/115	110/125
											EH*D-3M45	33.8/45.0	93.8/108	-	-	131/149	150/150
														9.6/8.7	-	143/160	150/175
														-	3.3/3.0 (2.4)	135/153	150/175
														9.6/8.7	3.3/3.0 (2.4)	147/164	150/175
											EH*D-3M60	43.3/57.6	120/139	-	-	164/152	175/175
														9.6/8.7	-	176/163	200/175
														-	3.3/3.0 (2.4)	168/156	175/175
														9.6/8.7	3.3/3.0 (2.4)	180/167	200/175

*NOTE: Use higher value for calculation of MCA. Use lower value for calculation of MOP.

APPENDIX B ELECTRICAL DATA

Model Number	Electrical Rating	Compressor			Outdoor Fan Motor			Indoor Fan Motor			Optional Electric Heat			Optional Powered Convienience Outlet	Optional Power Exhaust	Power Supply	
		QTY	RLA	LRA	QTY	HP	FLA	QTY	HP	FLA	Part #	KW*	FLA	FLA	FLA	MCA	MOP
DHC1503L	208/230/3/60	2	19.2	156.5	2	0.33	3.5	1	3.5	10.9	-	-	-	-	-	61.1/61.1	80/80
											-	-	-	9.6/8.7	-	70.7/69.8	80/80
											-	-	-	-	3.3/3.0 (2.4)	64.4/64.1	80/80
											-	-	-	9.6/8.7	3.3/3.0 (2.4)	74.0/72.8	90/90
											EH*D-3M10	7.5/10.0	20.8/24.1	-	-	61.1/61.1	80/80
														9.6/8.7	-	70.7/69.8	80/80
														-	3.3/3.0 (2.4)	64.4/64.1	80/80
														9.6/8.7	3.3/3.0 (2.4)	74.0/72.8	90/90
											EH*D-3M15	11.3/15.0	31.3/36.1	-	-	61.1/61.1	80/80
														9.6/8.7	-	70.7/69.8	80/80
														-	3.3/3.0 (2.4)	64.4/64.1	80/80
														9.6/8.7	3.3/3.0 (2.4)	74.0/73.4	90/90
											EH*D-3M20	15.0/20.0	41.7/48.1	-	-	65.7/73.8	80/80
														9.6/8.7	-	77.7/84.6	80/90
														-	3.3/3.0 (2.4)	69.9/77.5	80/80
														9.6/8.7	3.3/3.0 (2.4)	81.9/88.4	90/90
											EH*D-3M30	21.6/28.8	60.0/69.3	-	-	88.7/100	90/110
														9.6/8.7	-	101/111	110/125
														-	3.3/3.0 (2.4)	92.8/104	100/110
														9.6/8.7	3.3/3.0 (2.4)	105/115	110/125
											EH*D-3M45	33.8/45.0	93.8/108	-	-	131/149	150/150
														9.6/8.7	-	143/160	150/175
														-	3.3/3.0 (2.4)	135/153	150/175
														9.6/8.7	3.3/3.0 (2.4)	147/164	150/175
											EH*D-3M60	43.3/57.6	120/139	-	-	164/152	175/175
														9.6/8.7	-	176/163	200/175
														-	3.3/3.0 (2.4)	168/156	175/175
														9.6/8.7	3.3/3.0 (2.4)	180/167	200/175

*NOTE: Use higher value for calculation of MCA. Use lower value for calculation of MOP.

APPENDIX B ELECTRICAL DATA

Model Number	Electrical Rating	Compressor			Outdoor Fan Motor			Indoor Fan Motor			Optional Electric Heat			Optional Powered Convienience Outlet	Optional Power Exhaust	Power Supply	
		QTY	RLA	LRA	QTY	HP	FLA	QTY	HP	FLA	Part #	KW*	FLA	FLA	FLA	MCA	MOP
DHC1503W	208/230/3/60	2	19.2	156.5	2	0.33	3.5	1	5	14.5	-	-	-	-	-	64.7/64.7	80/80
											-	-	-	9.6/8.7	-	74.3/73.4	90/90
											-	-	-	-	3.3/3.0 (2.4)	68.0/67.7	80/80
											-	-	-	9.6/8.7	3.3/3.0 (2.4)	77.6/76.4	90/90
											EH*D-3M10	7.5/10.0	20.8/24.1	-	-	64.7/64.7	80/80
														9.6/8.7	-	74.3/73.4	90/90
														-	3.3/3.0 (2.4)	68.0/67.7	80/80
														9.6/8.7	3.3/3.0 (2.4)	77.6/76.4	90/90
											EH*D-3M15	11.3/15.0	31.3/36.1	-	-	64.7/64.7	80/80
														9.6/8.7	-	74.3/74.1	90/90
														-	3.3/3.0 (2.4)	68.0/67.7	80/80
														9.6/8.7	3.3/3.0 (2.4)	77.6/77.9	90/90
											EH*D-3M20	15.0/20.0	41.7/48.1	-	-	70.2/78.3	80/80
														9.6/8.7	-	82.2/89.1	90/90
														-	3.3/3.0 (2.4)	74.4/82.0	80/90
														9.6/8.7	3.3/3.0 (2.4)	86.4/92.9	90/100
											EH*D-3M30	21.6/28.8	60.0/69.3	-	-	93.2/105	100/110
														9.6/8.7	-	105/116	110/125
														-	3.3/3.0 (2.4)	97.3/108	100/110
														9.6/8.7	3.3/3.0 (2.4)	109/119	110/125
											EH*D-3M45	33.8/45.0	93.8/108	-	-	135/153	150/175
														9.6/8.7	-	147/164	150/175
														-	3.3/3.0 (2.4)	140/157	150/175
														9.6/8.7	3.3/3.0 (2.4)	152/168	175/175
											EH*D-3M60	43.3/57.6	120/139	-	-	168/157	175/175
														9.6/8.7	-	180/168	200/175
														-	3.3/3.0 (2.4)	172/160	175/175
														9.6/8.7	3.3/3.0 (2.4)	184/171	200/175

*NOTE: Use higher value for calculation of MCA. Use lower value for calculation of MOP.

APPENDIX B ELECTRICAL DATA

Model Number	Electrical Rating	Compressor			Outdoor Fan Motor			Indoor Fan Motor			Optional Electric Heat			Optional Powered Convienience Outlet	Optional Power Exhaust	Power Supply	
		QTY	RLA	LRA	QTY	HP	FLA	QTY	HP	FLA	Part #	KW*	FLA	FLA	FLA	MCA	MOP
DHC1504D	460/3/60	2	9	74.8	2	0.33	1.6	1	3.5	7.2	-	-	-	-	-	30.6	35
											-	-	-	4.3	-	34.9	40
											-	-	-	-	1.2 (1.0)	31.8	40
											-	-	-	4.3	1.2 (1.0)	36.1	40
											EH*D-4M10	10	12	-	-	30.6	35
														4.3	-	34.9	40
														-	1.2 (1.0)	31.8	40
														4.3	1.2 (1.0)	36.1	40
											EH*D-4M15	15	18	-	-	31.6	35
														4.3	-	36.9	40
														-	1.2 (1.0)	33.1	40
														4.3	1.2 (1.0)	38.4	40
											EH*D-4M20	20	24.1	-	-	39.1	40
														4.3	-	44.4	45
														-	1.2 (1.0)	40.6	45
														4.3	1.2 (1.0)	45.9	50
											EH*D-4M30	28.8	34.6	-	-	52.3	60
														4.3	-	57.7	60
														-	1.2 (1.0)	53.8	60
														4.3	1.2 (1.0)	59.2	60
											EH*D-4M45	45	54.1	-	-	76.7	80
														4.3	-	82.0	90
														-	1.2 (1.0)	78.2	80
														4.3	1.2 (1.0)	83.5	90
											EH*D-4M60	57.6	69.3	-	-	78.3	90
														4.3	-	83.7	90
														-	1.2 (1.0)	79.8	90
														4.3	1.2 (1.0)	85.2	90
DHC1504L	460/3/60	2	9	74.8	2	0.33	1.6	1	3.5	7.2	-	-	-	-	-	30.6	35
											-	-	-	4.3	-	34.9	40
											-	-	-	-	1.2 (1.0)	31.8	40
											-	-	-	4.3	1.2 (1.0)	36.1	40
											EH*D-4M10	10	12	-	-	30.6	35
														4.3	-	34.9	40
														-	1.2 (1.0)	31.8	40
														4.3	1.2 (1.0)	36.1	40
											EH*D-4M15	15	18	-	-	31.6	35
														4.3	-	36.9	40
														-	1.2 (1.0)	33.1	40
														4.3	1.2 (1.0)	38.4	40
											EH*D-4M20	20	24.1	-	-	39.1	40
														4.3	-	44.4	45
														-	1.2 (1.0)	40.6	45
														4.3	1.2 (1.0)	45.9	50
											EH*D-4M30	28.8	34.6	-	-	52.3	60
														4.3	-	57.7	60
														-	1.2 (1.0)	53.8	60
														4.3	1.2 (1.0)	59.2	60
											EH*D-4M45	45	54.1	-	-	76.7	80
														4.3	-	82.0	90
														-	1.2 (1.0)	78.2	80
														4.3	1.2 (1.0)	83.5	90
											EH*D-4M60	57.6	69.3	-	-	78.3	90
														4.3	-	83.7	90
														-	1.2 (1.0)	79.8	90
														4.3	1.2 (1.0)	85.2	90

*NOTE: Use higher value for calculation of MCA. Use lower value for calculation of MOP.

APPENDIX B ELECTRICAL DATA

Model Number	Electrical Rating	Compressor			Outdoor Fan Motor			Indoor Fan Motor			Optional Electric Heat			Optional Powered Convienience Outlet	Optional Power Exhaust	Power Supply	
		QTY	RLA	LRA	QTY	HP	FLA	QTY	HP	FLA	Part #	KW*	FLA	FLA	FLA	MCA	MOP
DHC1504W	460/3/60	2	9	74.8	2	0.33	1.6	1	5	10.6	-	-	-	-	-	34.0	40
											-	-	-	4.3	-	38.3	45
											-	-	-	-	1.2 (1.0)	35.2	45
											-	-	-	4.3	1.2 (1.0)	39.5	50
											EH*D-4M10	10	12	-	-	34.0	40
														4.3	-	38.3	45
														-	1.2 (1.0)	35.2	45
														4.3	1.2 (1.0)	39.5	50
											EH*D-4M15	15	18	-	-	35.8	40
														4.3	-	41.2	45
														-	1.2 (1.0)	37.3	45
														4.3	1.2 (1.0)	42.7	50
											EH*D-4M20	20	24.1	-	-	43.3	45
														4.3	-	48.7	50
														-	1.2 (1.0)	44.8	45
														4.3	1.2 (1.0)	50.2	60
											EH*D-4M30	28.8	34.6	-	-	56.6	60
														4.3	-	61.9	70
														-	1.2 (1.0)	58.1	60
														4.3	1.2 (1.0)	63.4	70
											EH*D-4M45	45	54.1	-	-	80.9	90
														4.3	-	86.3	90
														-	1.2 (1.0)	82.4	90
														4.3	1.2 (1.0)	87.8	90
											EH*D-4M60	57.6	69.3	-	-	82.5	90
														4.3	-	87.9	90
														-	1.2 (1.0)	84.0	90
														4.3	1.2 (1.0)	89.4	90
DHC1507D	575/3/60	2	7.0	53.9	2	0.33	1.54	1	3.5	5.0	-	-	-	-	-	23.9	30
											-	-	-	3.5	-	27.4	30
											-	-	-	-	1.3	25.2	30
											-	-	-	3.5	1.3	28.7	35
											EH*D-7M10	10	9.62	-	-	23.9	30
														3.5	-	27.4	30
														-	1.3	25.2	30
														3.5	1.3	28.7	35
											EH*D-7M15	15	14.4	-	-	24.3	30
														3.5	-	28.7	30
														-	1.3	25.9	30
														3.5	1.3	30.3	35
											EH*D-7M20	20	19.2	-	-	30.3	35
														3.5	-	34.7	35
														-	1.3	31.9	35
														3.5	1.3	36.3	40
											EH*D-7M30	28.8	27.7	-	-	40.9	45
														3.5	-	45.3	50
														-	1.3	42.5	45
														3.5	1.3	46.9	50
											EH*D-7M45	45	43.3	-	-	60.4	70
														3.5	-	64.8	70
														-	1.3	62.0	70
														3.5	1.3	66.4	70
											EH*D-7M60	57.6	55.4	-	-	61.7	70
														3.5	-	66.1	70
														-	1.3	63.3	70
														3.5	1.3	67.7	70

*NOTE: Use higher value for calculation of MCA. Use lower value for calculation of MOP.

APPENDIX B ELECTRICAL DATA

Model Number	Electrical Rating	Compressor			Outdoor Fan Motor			Indoor Fan Motor			Optional Electric Heat			Optional Powered Convienience Outlet	Optional Power Exhaust	Power Supply	
		QTY	RLA	LRA	QTY	HP	FLA	QTY	HP	FLA	Part #	KW*	FLA	FLA	FLA	MCA	MOP
DHC1507L	575/3/60	2	7.0	53.9	2	0.33	1.54	1	3.5	5.0	-	-	-	-	-	23.9	30
											-	-	-	3.5	-	27.4	30
											-	-	-	-	1.3	25.2	30
											-	-	-	3.5	1.3	28.7	35
											EH*D-7M10	10	9.62	-	-	23.9	30
														3.5	-	27.4	30
														-	1.3	25.2	30
														3.5	1.3	28.7	35
											EH*D-7M15	15	14.4	-	-	24.3	30
														3.5	-	28.7	30
														-	1.3	25.9	30
														3.5	1.3	30.3	35
											EH*D-7M20	20	19.2	-	-	30.3	35
														3.5	-	34.7	35
														-	1.3	31.9	35
														3.5	1.3	36.3	40
											EH*D-7M30	28.8	27.7	-	-	40.9	45
														3.5	-	45.3	50
														-	1.3	42.5	45
														3.5	1.3	46.9	50
											EH*D-7M45	45	43.3	-	-	60.4	70
														3.5	-	64.8	70
														-	1.3	62.0	70
														3.5	1.3	66.4	70
											EH*D-7M60	57.6	55.4	-	-	61.7	70
														3.5	-	66.1	70
														-	1.3	63.3	70
														3.5	1.3	67.7	70
DHC1507W	575/3/60	2	7.0	53.9	2	0.33	1.54	1	5.0	7.2	-	-	-	-	-	26.1	30
											-	-	-	3.5	-	29.6	35
											-	-	-	-	1.3	27.4	30
											-	-	-	3.5	1.3	30.9	35
											EH*D-7M10	10	9.62	-	-	26.1	30
														3.5	-	29.6	35
														-	1.3	27.4	30
														3.5	1.3	30.9	35
											EH*D-7M15	15	14.4	-	-	27.0	30
														3.5	-	31.4	35
														-	1.3	28.7	30
														3.5	1.3	33.0	35
											EH*D-7M20	20	19.2	-	-	33.1	35
														3.5	-	37.4	40
														-	1.3	34.7	35
														3.5	1.3	39.1	40
											EH*D-7M30	28.8	27.7	-	-	43.6	45
														3.5	-	48.0	50
														-	1.3	45.3	50
														3.5	1.3	49.6	50
											EH*D-7M45	45	43.3	-	-	63.1	70
														3.5	-	67.5	70
														-	1.3	64.8	70
														3.5	1.3	69.1	70
											EH*D-7M60	57.6	55.4	-	-	64.4	70
														3.5	-	68.8	70
														-	1.3	66.1	70
														3.5	1.3	70.4	80

*NOTE: Use higher value for calculation of MCA. Use lower value for calculation of MOP.

APPENDIX C UNIT DIMENSIONS

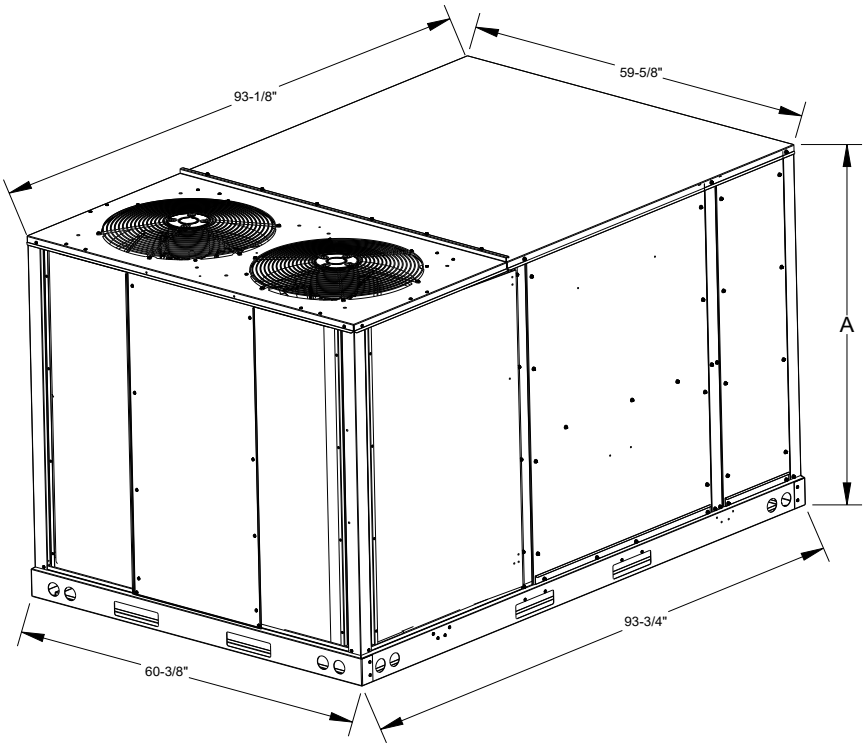

MODEL	DIM "A"
DHC090	54.6"
DHC102	54.6"
DHC120	54.6"
DHC150	58.8"

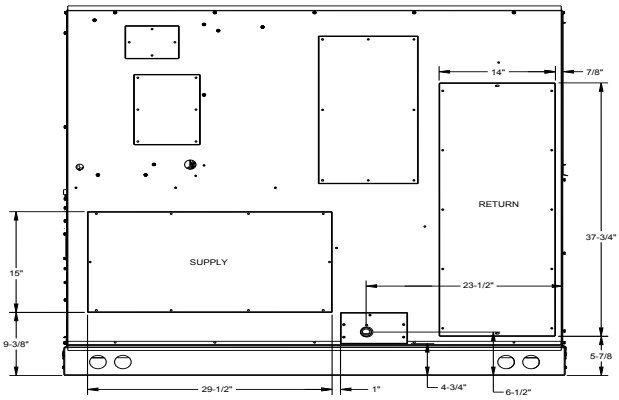

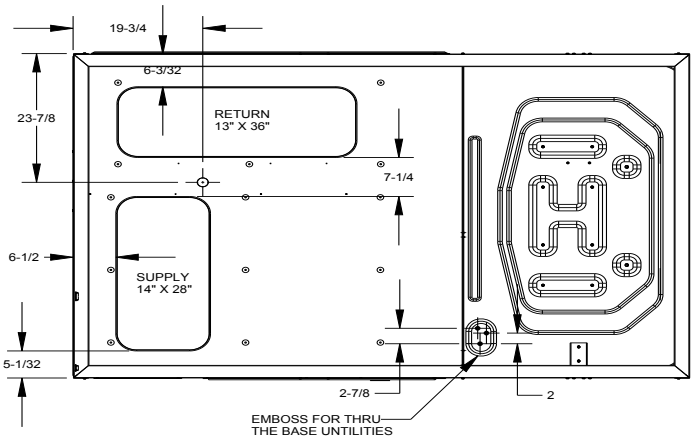

NOTE: Refer to IOD-7082 included in the literature pack for installing horizontal duct covers.

APPENDIX D WIRING DIAGRAMS

WARNING

HIGH VOLTAGE!
DISCONNECT ALL POWER BEFORE SERVICING OR INSTALLING THIS UNIT. MULTIPLE POWER SOURCES MAY BE PRESENT. FAILURE TO DO SO MAY CAUSE PROPERTY DAMAGE, PERSONAL INJURY OR DEATH.

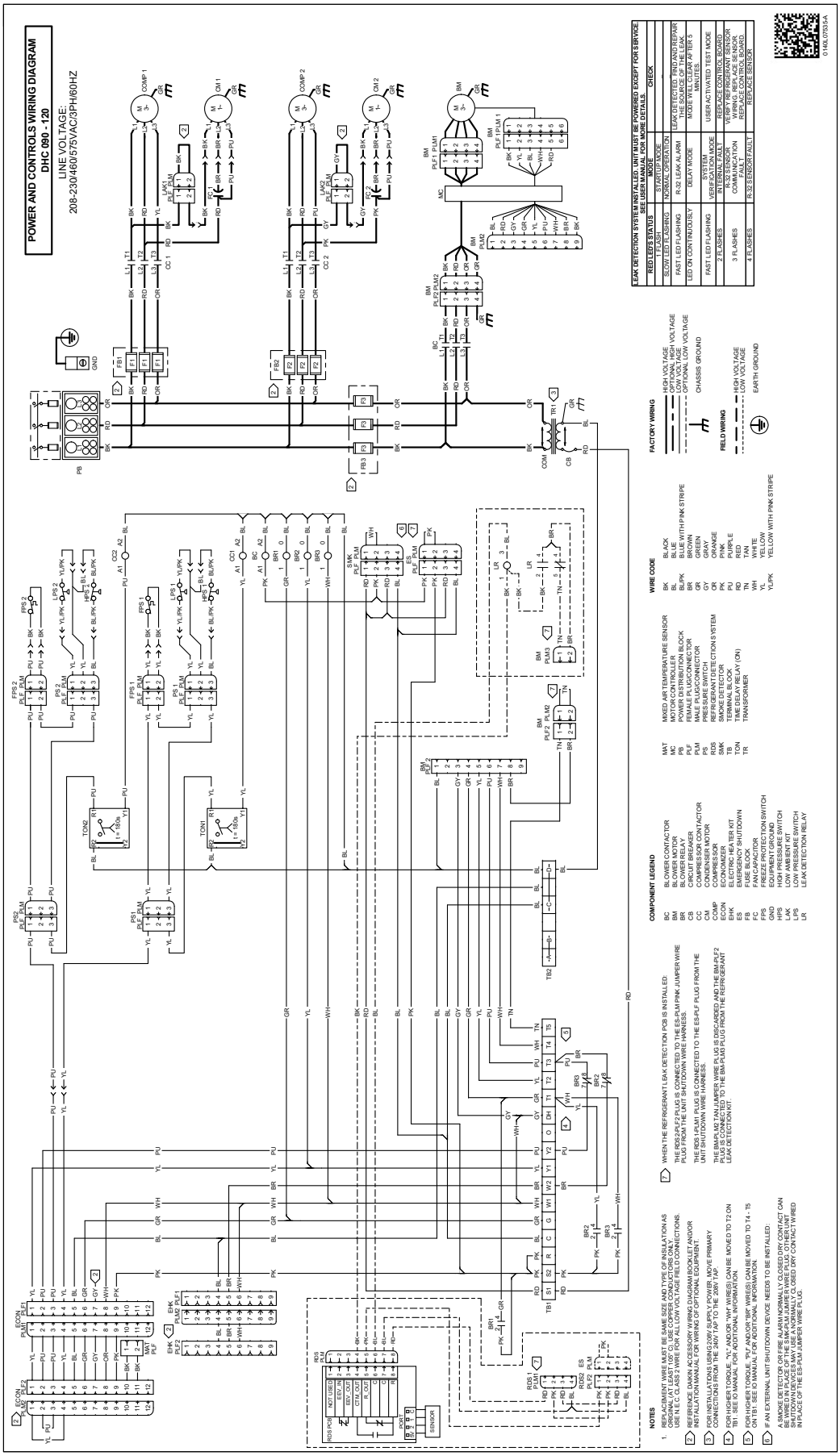

Wiring is subject to change. Always refer to the wiring diagram on the unit for the most up-to-date wiring.

APPENDIX D WIRING DIAGRAMS

WARNING

HIGH VOLTAGE!
DISCONNECT ALL POWER BEFORE SERVICING OR INSTALLING THIS UNIT. MULTIPLE POWER SOURCES MAY BE PRESENT. FAILURE TO DO SO MAY CAUSE PROPERTY DAMAGE, PERSONAL INJURY OR DEATH.

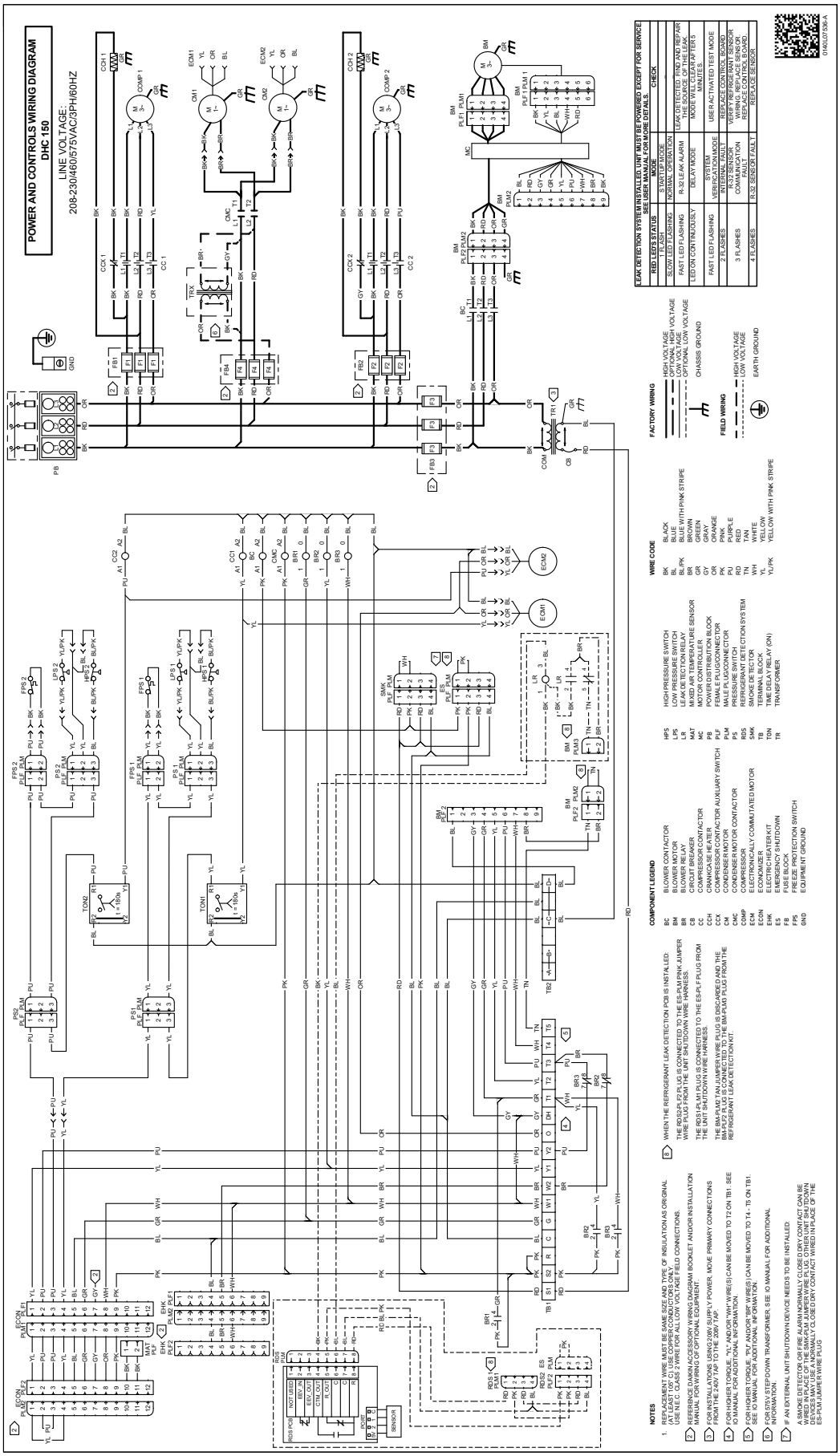

Wiring is subject to change. Always refer to the wiring diagram on the unit for the most up-to-date wiring.

APPENDIX D WIRING DIAGRAMS

WARNING

HIGH VOLTAGE!
DISCONNECT ALL POWER BEFORE SERVICING OR INSTALLING THIS UNIT. MULTIPLE POWER SOURCES MAY BE PRESENT. FAILURE TO DO SO MAY CAUSE PROPERTY DAMAGE, PERSONAL INJURY OR DEATH.

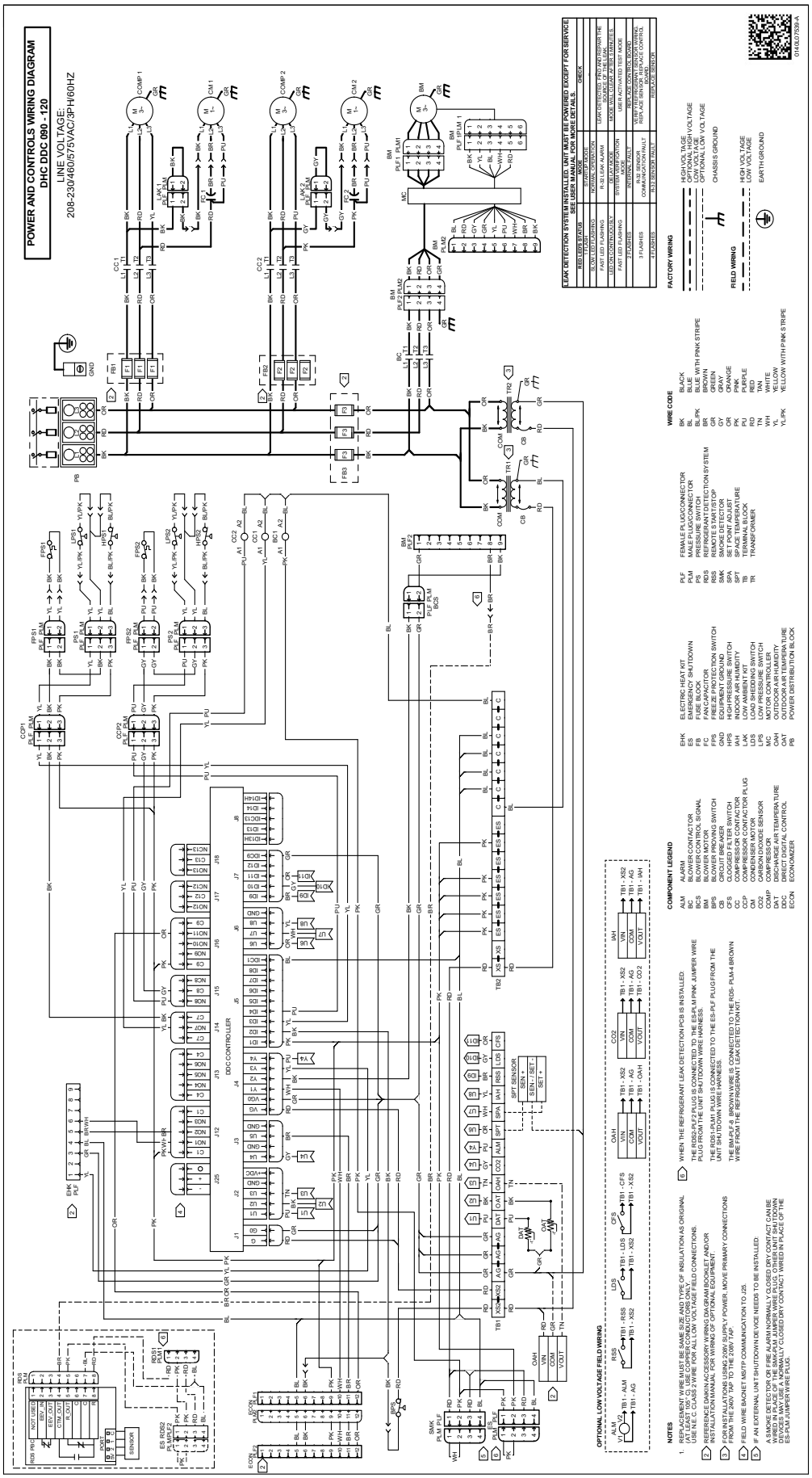

APPENDIX D WIRING DIAGRAMS

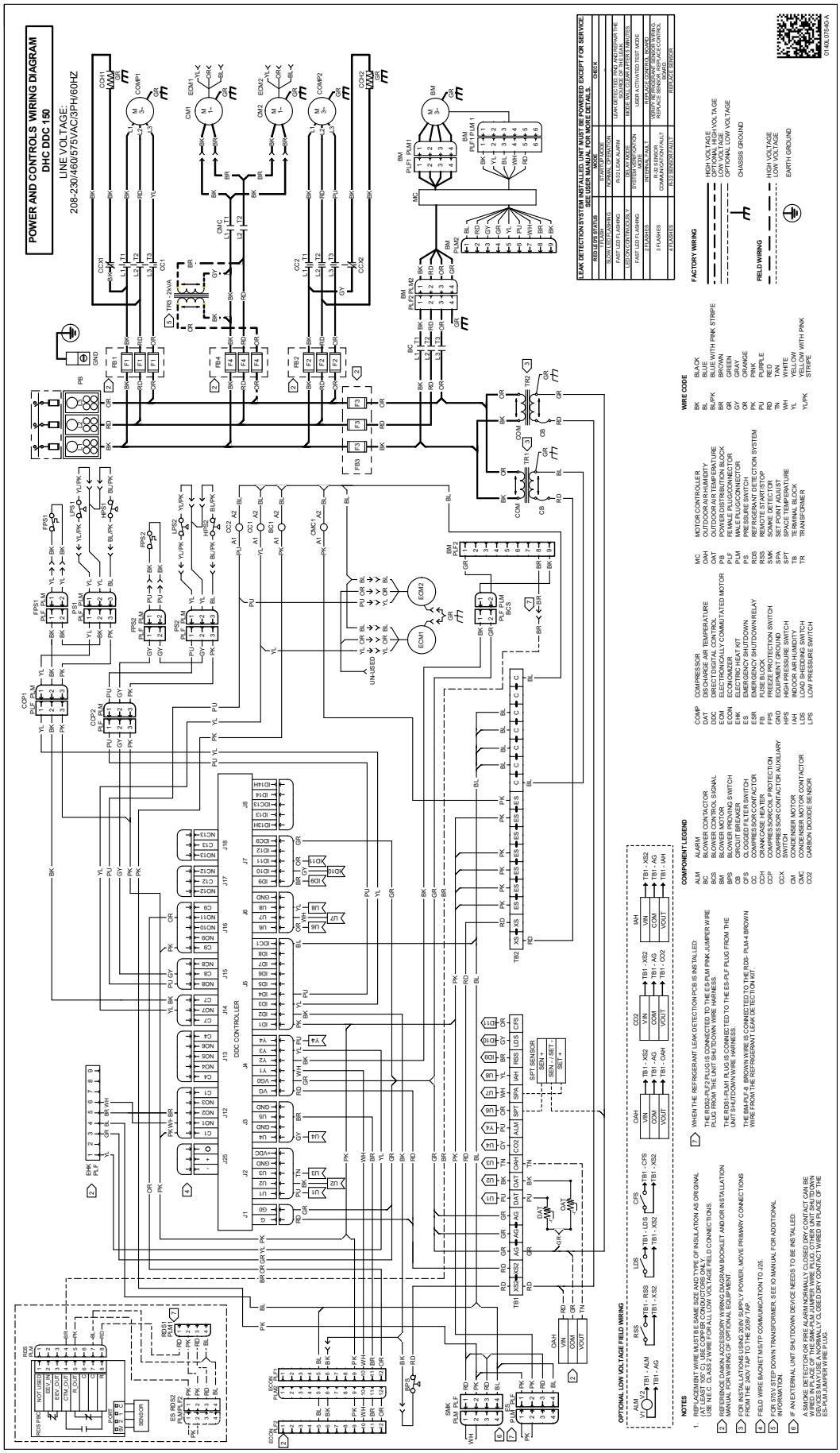

Wiring is subject to change. Always refer to the wiring diagram on the unit for the most up-to-date wiring.

APPENDIX D WIRING DIAGRAMS

WARNING

HIGH VOLTAGE!
DISCONNECT ALL POWER BEFORE SERVICING OR INSTALLING THIS UNIT. MULTIPLE POWER SOURCES MAY BE PRESENT. FAILURE TO DO SO MAY CAUSE PROPERTY DAMAGE, PERSONAL INJURY OR DEATH.

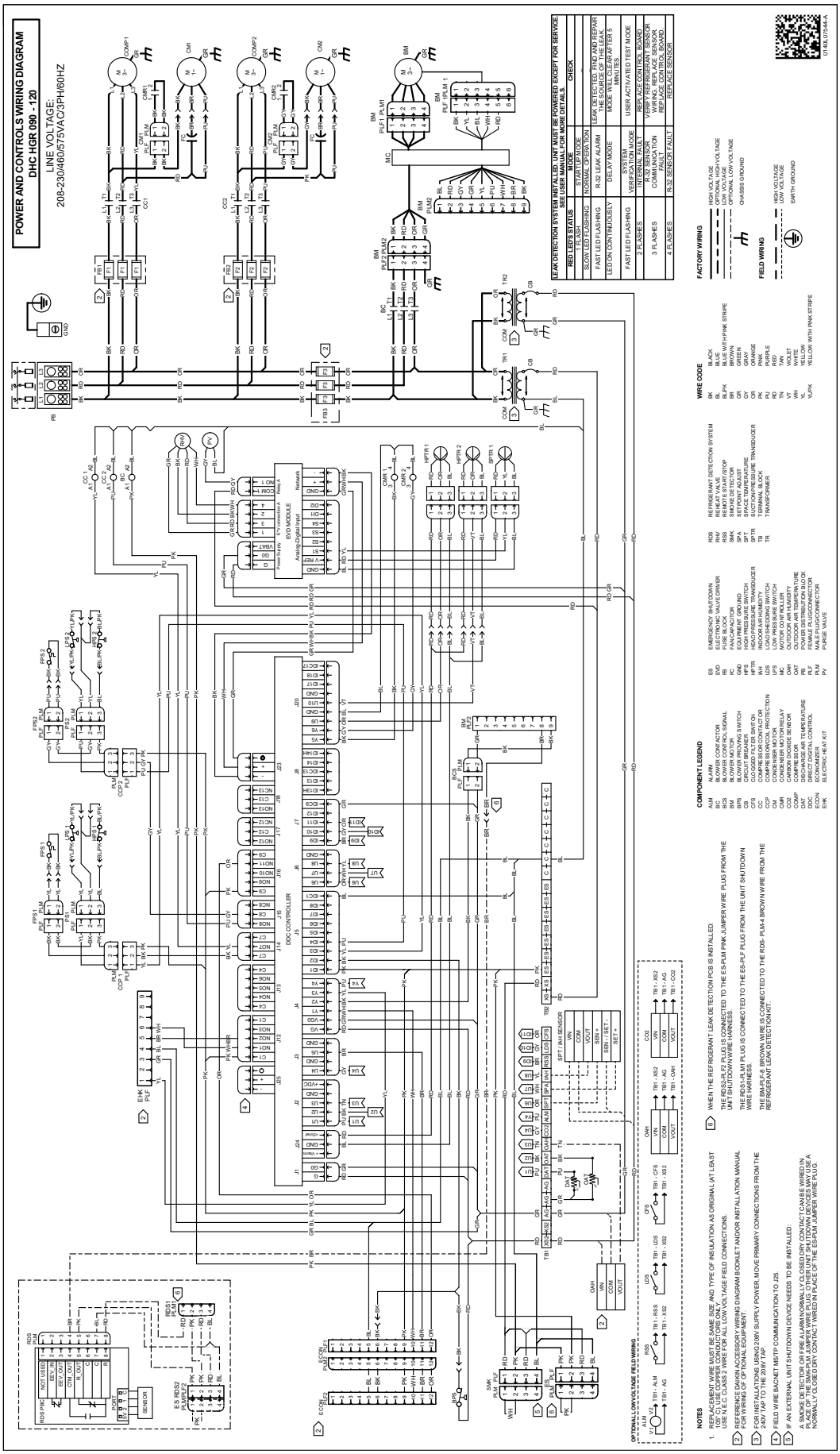

Wiring is subject to change. Always refer to the wiring diagram on the unit for the most up-to-date wiring.

APPENDIX D WIRING DIAGRAMS

WARNING

HIGH VOLTAGE!
DISCONNECT ALL POWER BEFORE SERVICING OR INSTALLING THIS UNIT. MULTIPLE POWER SOURCES MAY BE PRESENT. FAILURE TO DO SO MAY CAUSE PROPERTY DAMAGE, PERSONAL INJURY OR DEATH.

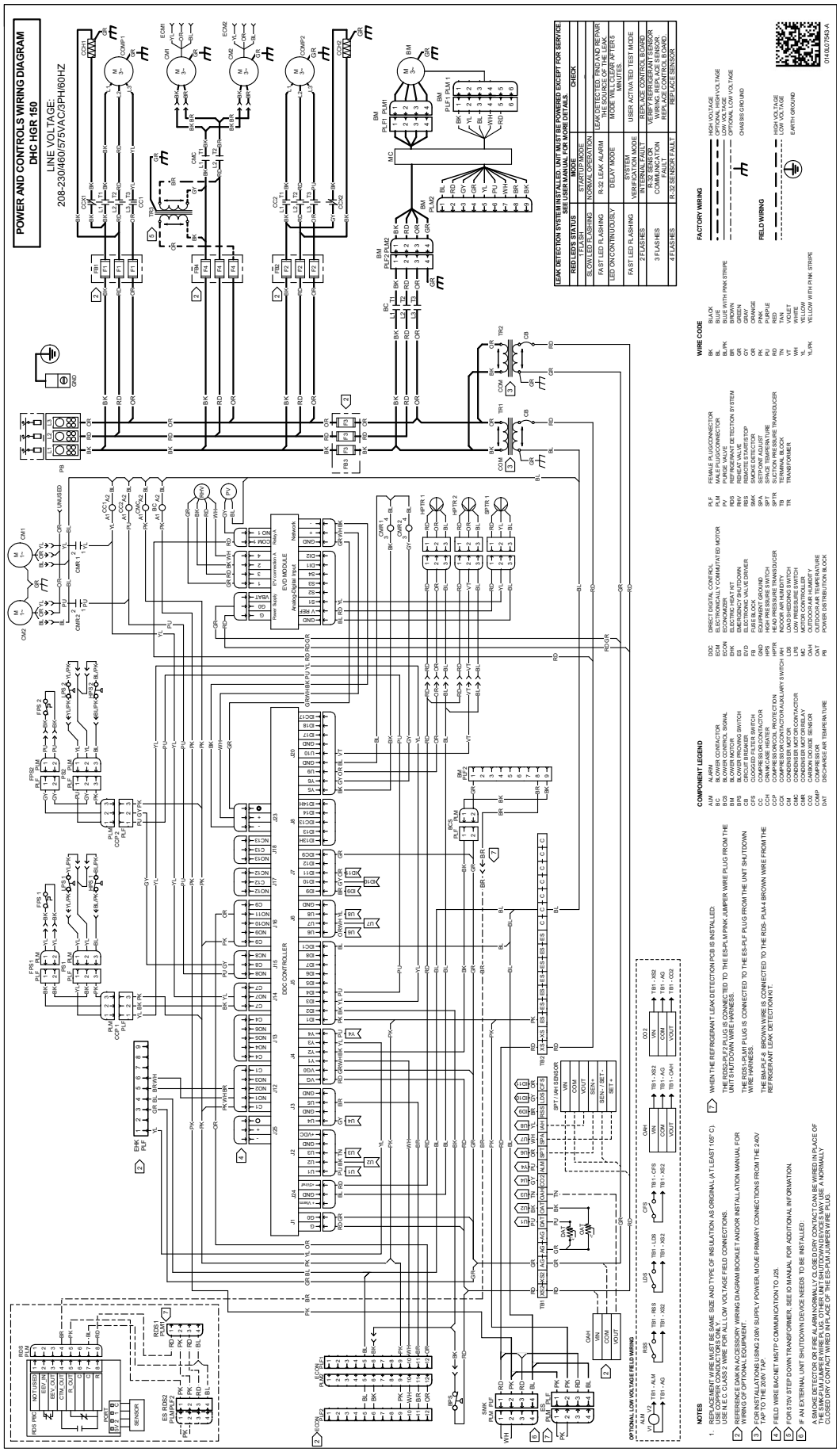

Wiring is subject to change. Always refer to the wiring diagram on the unit for the most up-to-date wiring.

APPENDIX E AIRFLOW FOR ELECTRIC HEAT

UNIT	HEATER KIT MODEL NUMBER	Kw	MINIMUM CFM	MAXIMUM CFM
7.5 Ton	EH*D-*M10	10	2500	3750
	EH*D-*M15	15		
	EH*D-*M20	20		
	EH*D-*M30	30		
	EH*D-*M45	45		
8.5 Ton	EH*D-*M10	10	2850	4250
	EH*D-*M15	15		
	EH*D-*M20	20		
	EH*D-*M30	30		
	EH*D-*M45	45		
10 Ton	EH*D-*M10	10	3150	5000
	EH*D-*M15	15		
	EH*D-*M20	20		
	EH*D-*M30	30		
	EH*D-*M45	45		
	EH*D-*M60	60		
12.5 Ton	EH*D-*M10	10	3750	6250
	EH*D-*M15	15		
	EH*D-*M20	20		
	EH*D-*M30	30		
	EH*D-*M45	45		
	EH*D-*M60	60		

HEATER KIT MODEL NUMBER NOMENCLATURE

EH	X	D	-	3	M	15
1	2	3		4	5	6, 7

Electric

Heater

- **X** Staged
- **S** SCR (modulating)

Drive System

- **B** Belt Drive
- **D** Direct Drive

Voltage

- **1** 208-230/1/60 Single phase 60 Hz
- **3** 208-230/3/60 Three phase 60 Hz
- **4** 460/3/60 Three phase 60 Hz
- **7** 575/3/60 Three phase 60 Hz

Chassis

- **S** Small
- **M** Medium
- **L** Large

Kilowatt

- **10** 10 KW
- **15** 15 KW
- **20** 20 KW
- **30** 30 KW
- **45** 45 KW
- **60** 60 KW

***NOTE: Electric Heat Kit installations where line voltage is greater than 106% of nominal may require additional airflow to avoid nuisance tripping of the primary thermal limits**

Start-up Checklist

**Store in job file*

Date: _____ Location: _____

Model Number: _____ _____

Serial Number: _____ _____

Technician: _____ Unit #: _____

Pre Start-Up

(Check each item as completed)

- ☐ Verify all packaging material has been removed.
- ☐ Remove all shipping brackets per installation instructions.
- ☐ Verify the job site voltage agrees with the unit serial plate.
- ☐ Verify condensate connection is installed per installation instructions.
- ☐ Verify proper clearance around the unit for safety, service, maintenance and proper unit operation.
- ☐ Verify proper weatherproofing of all ductwork, roof curbs and electrical connections.
- ☐ Check that the flue screen is in place.
- ☐ Check gas piping for leaks.
- ☐ Verify gas pressure to the unit is within the range specified on the serial plate.
- ☐ Check to ensure that all fans, pulleys and wheels are secure.
- ☐ Check for proper belt tension and alignment per installation instructions.
- ☐ Check refrigerant piping for rubbing and leaks. *Repair if necessary.*
- ☐ Check unit wiring to ensure it is not in contact with refrigerant piping or sharp metal edges.
- ☐ Check all electrical connections and terminals. *Tighten as needed.*
- ☐ Verify that the crankcase heaters have been energized for 24 hours.
- ☐ Verify the scroll compressor(s) are rotating in the right direction.
- ☐ Verify all accessories are installed and operating correctly.
- ☐ Check filters and replace if necessary.
- ☐ Verify the installation of the thermostat.

9/2014

Start-Up

(Insert the values as each item is completed.)

ELECTRICAL

Supply Voltage	L1 - L2	_____	L2 - L3	_____	L3 - L1	_____
Circuit 1 Compressor Amps	L1	_____	L2	_____	L3	_____
Circuit 2 Compressor Amps	L1	_____	L2	_____	L3	_____
Blower Amps	L1	_____	L2	_____	L3	_____
Condenser Fan Amps	Fan 1	_____	Fan 2	_____	Fan 3	_____

BLOWER EXTERNAL STATIC PRESSURE

Return Air Static Pressure	_____	IN. W.C.
Supply Air Static Pressure	_____	IN. W.C.
Total External Static Pressure	_____	IN. W.C.
Blower Wheel RPM	_____	RPM

TEMPERATURES

Outdoor Air Temperature	_____	DB	_____	WB
Return Air Temperature	_____	DB	_____	WB
Cooling Supply Air Temperature	_____	DB	_____	WB
Heating Supply Air Temperature	_____	DB		

PRESSURES

Gas Inlet Pressure	_____	IN. W.C.		
Gas Manifold Pressure	_____	IN. W.C. (Low Fire)	_____	IN. W.C. (High Fire)
Suction Circuit 1	_____	PSIG	_____	°F
Superheat (Orifice System)			_____	°F
Suction Circuit 2	_____	PSIG	_____	°F
Superheat (Orifice System)			_____	°F
Discharge Circuit 1	_____	PSIG	_____	°F
Subcooling (TXV System)			_____	°F
Discharge Circuit 2	_____	PSIG	_____	°F
Subcooling (TXV System)			_____	°F

(HEAT PUMP ONLY)

Suction Circuit 1	_____	PSIG	_____	°F
Suction Circuit 2	_____	PSIG	_____	°F
Discharge Circuit 1	_____	PSIG	_____	°F
Discharge Circuit 2	_____	PSIG	_____	°F

THIS PAGE INTENTIONALLY LEFT BLANK

CUSTOMER FEEDBACK

Daikin is very interested in all product comments.
Please fill out the feedback form on the following link:
https://daikincomfort.com/contact-us
You can also scan the QR code on the right to be directed to the feedback page.

Our continuing commitment to quality products may mean a change in specifications without notice.
© 2025 Daikin Comfort Technologies Manufacturing, Inc.
19001 Kermier Rd., Waller, TX 77484
www.daikincomfort.com