DSC/DSH Series Light Commercial Packaged Heating and Cooling Unit 7.5T to 12.5T Installation Instructions

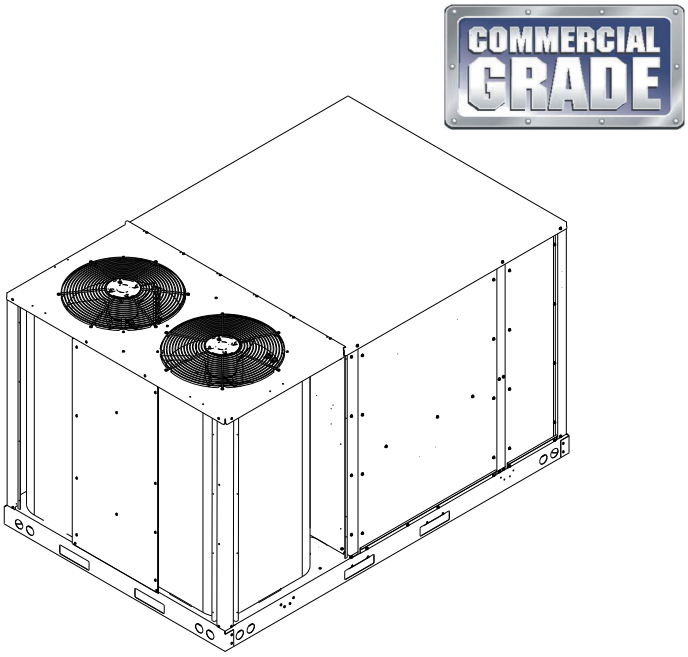

WARNING

ONLY PERSONNEL THAT HAVE BEEN TRAINED TO INSTALL, ADJUST, SERVICE, MAINTENANCE OR REPAIR (HEREINAFTER, "SERVICE") THE EQUIPMENT SPECIFIED IN THIS MANUAL SHOULD SERVICE THE EQUIPMENT.

THIS EQUIPMENT IS NOT INTENDED FOR USE BY PERSONS (INCLUDING CHILDREN) WITH REDUCED PHYSICAL, SENSORY OR MENTAL CAPABILITIES, OR LACK OF EXPERIENCE AND KNOWLEDGE, UNLESS THEY HAVE BEEN GIVEN SUPERVISION OR INSTRUCTION CONCERNING USE OF THE APPLIANCE BY A PERSON RESPONSIBLE FOR THEIR SAFETY.

CHILDREN SHOULD BE SUPERVISED TO ENSURE THAT THEY DO NOT PLAY WITH THE EQUIPMENT.

THE MANUFACTURER WILL NOT BE RESPONSIBLE FOR ANY INJURY OR PROPERTY DAMAGE ARISING FROM IMPROPER SUPERVISION, SERVICE OR SERVICE PROCEDURES. IF YOU SERVICE THIS UNIT, YOU ASSUME RESPONSIBILITY FOR ANY INJURY OR PROPERTY DAMAGE WHICH MAY RESULT. IN ADDITION, IN JURISDICTIONS THAT REQUIRE ONE OR MORE LICENSES TO SERVICE THE EQUIPMENT SPECIFIED IN THIS MANUAL, ONLY LICENSED PERSONNEL SHOULD SERVICE THE EQUIPMENT. IMPROPER SUPERVISION, INSTALLATION, ADJUSTMENT, SERVICING, MAINTENANCE OR REPAIR OF THE EQUIPMENT SPECIFIED IN THIS MANUAL, OR ATTEMPTING TO INSTALL, ADJUST, SERVICE OR REPAIR THE EQUIPMENT SPECIFIED IN THIS MANUAL WITHOUT PROPER SUPERVISION OR TRAINING MAY RESULT IN PRODUCT DAMAGE, PROPERTY DAMAGE, PERSONAL INJURY OR DEATH.

WARNING

DO NOT BYPASS SAFETY DEVICES

Our continuing commitment to quality products may mean a change in specifications without notice.

©2024-2025 DAIKIN COMFORT TECHNOLOGIES MANUFACTURING, L.P.

19001 Kermier Rd., Waller, TX 77484
www.daikincomfort.com

IOD-1071B
01/2025

INDEX

Safety Instructions 2
Replacement Parts 2
General Information 3
Clearances 7
Roof Curb Post-Installation Checks 7
Roof Top Duct Connections 7
Rigging Details 8
Weights And Center Of Gravity 9
Electrical Wiring 10
Circulating Air And Filters 12
Condensate Drain Connection 12
Startup, Adjustments, And Checks 13
Air Flow Adjustments 14
Heat Pump Operation 18
Maintenance 19
Troubleshooting 21
Appendix A Blower Performance Data 24
Appendix B Electrical Data 45
Appendix C Unit Dimensions 56
Appendix D Min-Max Airflow 57
Wiring Diagram 58
Start-Up Checklist 60

SAFETY INSTRUCTIONS

RECOGNIZE THIS SYMBOL AS A SAFETY PRECAUTION.

These installation instructions cover the outdoor installation of single package heating and cooling units. See the Specification Sheet applicable to your model for information regarding accessories.

***NOTE: Please contact your distributor or our website for the applicable Specification Sheet referred to in this manual.**

REPLACEMENT PARTS

Ordering Parts

When reporting shortages or damages report this to https://www.goodmanmfg.com/logistics-feedback. When ordering repair parts give the complete unit model and serial numbers as stamped on the unit's nameplate.

Replacement parts for this appliance are available through your contractor or local distributor. Your nearest distributor can be located online at www.daikinac.com or by contacting:

EQUIPMENT SUPPORT
Daikin Comfort Technologies Manufacturing, L.P.
19001 Kermier Road
Waller, Texas 77484
855-770-5678

To The Installer

Before installing this unit, please read this manual to familiarize yourself on the specific items which must be adhered to, including maximum external static pressure to unit, air temperature rise, minimum or maximum CFM and motor speed connections.

Keep this literature in a safe place for future reference.

WARNING

To prevent the risk of property damage, personal injury, or death, do not store combustible materials or use gasoline or other flammable liquids or vapors in the vicinity of this appliance.

CAUTION

Sheet metal parts, screws, clips and similar items inherently have sharp edges, and it is necessary that the installer and service personnel exercise caution.

WARNING

Do not connect to or use any device that is not certified by the manufacturer for use with this unit. Serious property damage, personal injury, reduced unit performance and/or hazardous conditions may result from the use of such non-approved devices.

WARNING

This unit must not be used as a "construction heater" during the finishing phases of construction on a new structure. This type of use may result in premature failure of the unit due to extremely low return air temperature and exposure to corrosive or very dirty atmospheres.

WARNING

HIGH VOLTAGE!
Disconnect all power before servicing or installing this unit. Multiple power sources may be present. Failure to do so may cause property damage, personal injury or death.

WARNING

Do not use means to accelerate defrosting process or to clean, other than those recommended by the manufacturer.

The appliance shall be stored in a room without continuously operating ignition sources (For example: Open flames, an operating gas appliance or an operating electric heater.

Do not pierce or burn.

Be aware that refrigerants may not contain an odor.

WARNING

Only auxiliary devices approved by the appliance manufacturer or declared suitable with the refrigerant shall be installed in connecting ductwork.

WARNING

Auxiliary devices which may be a POTENTIAL IGNITION SOURCE shall not be installed in the duct work. Examples of such POTENTIAL IGNITION SOURCES are hot surfaces with a temperature exceeding 700°C and electric switching devices.

WARNING

LEAK DETECTION SYSTEM installed. Unit must be powered except for service.

WARNING

This unit is equipped with electrically powered safety measures. To be effective, the unit must be electrically powered at all times after installation, other than when servicing.

WARNING

Do not operate the compressor(s) without the terminal plug fully engaged or the terminal cover properly installed.

WARNING

A tripped circuit breaker or blown fuse may indicate that an electrical problem exists. Do not reset a circuit breaker or replace fuses without first performing thorough electrical troubleshooting and testing procedures.

WARNING

HIGH VOLTAGE!
Prior to servicing the unit or removing the compressor terminal plug or terminal cover, disconnect all electrical power from the unit. Multiple power sources may be present.

WARNING

HERMETIC COMPRESSOR ELECTRICAL TERMINAL VENTING CAN BE DANGEROUS. IN CERTAIN CIRCUMSTANCES, THE TERMINAL MAY BE EXPELLED, VENTING THE REFRIGERANT VAPOR AND COMPRESSOR OIL CONTAINED WITHIN THE COMPRESSOR HOUSING AND SYSTEM. BE ALERT FOR SOUNDS OF ARCING (SIZZLING, SPUTTERING, OR POPPING) INSIDE THE COMPRESSOR. IMMEDIATLY GET AWAY IF YOU HEAR THESE SOUNDS AND DISCONNECT ELECTRICAL POWER FROM THE UNIT.

GENERAL INFORMATION

WARNING

To prevent property damage, personal injury or death, due to fire, explosions, smoke, soot, condensation, electric shock or carbon monoxide, this unit must be properly installed, repaired, operated, and maintained.

This unit is approved for outdoor installation ONLY. Not accessible to the public. Rated performance is achieved after 20 hours of operation. Rated performance is delivered at the specified airflow. See outdoor unit specification sheet for split system models or product specification sheet for packaged and light commercial models. Specification sheets can be found at www.daikinac.com for Daikin brand products. Within the website, please select the residential or commercial products menu and then select the submenu for the type of product to be installed, such as air conditioners or heat pumps, to access a list of product pages that each contain links to that model's specification sheet.

Qualification of workers

Personnel must be certified to service, work, and/or repair units with FLAMMABLE REFRIGERANTS. A certificate should document the competence and qualifications achieved through training that included the substance of the following:

- Information about the explosion potential of FLAMMABLE REFRIGERANTS to show that flammables may be dangerous when handled without care.
- Information about POTENTIAL IGNITION SOURCES, especially those that are not obvious, such as lighters, light switches, vacuum cleaners, electric heaters.
- Information about the different safety concepts, including ventilated and unventilated areas.
- Information about refrigerant detectors, including function, operation, and service measures.
- Information about the concept of sealed components and sealed enclosures according to IEC 60079-15:2010.
- Information about the correct working procedures, including commissioning, maintenance, repair, decommissioning, and disposal procedures.

EPA Regulations

Important: The United States Environmental Protection Agency (EPA) has issued various regulations regarding the introduction and disposal of refrigerants in this unit. Failure to follow these regulations may harm the environment and can lead to the imposition of substantial fines. Because regulations may vary due to passage of new laws, we suggest a certified technician perform any work done on this unit. Should you have any questions please contact the local office of the EPA.

National Codes

This product is designed and manufactured to permit installation in accordance with National Codes. It is the installer's responsibility to install the product in accordance with National Codes and/or prevailing local codes and regulations.

The heating and cooling capacities of the unit should be greater than or equal to the design heating and cooling loads of the area to be conditioned. The loads should be calculated by an approved method or in accordance with ASHRAE Guide or Manual J - Load Calculations published by the Air Conditioning Contractors of America.

Obtain from:
American National Standards Institute
www.ansi.org

System design and installation should also, where applicable, follow information presented in accepted industry guides such as the ASHRAE Handbooks. The manufacturer assumes no responsibility for equipment installed in violation of any code or regulation. The mechanical installation of the packaged roof top units consists of making final connections between the unit and building services; supply and return duct connections; and drain connections (if required). The internal systems of the unit are completely factory-installed and tested prior to shipment.

Units are generally installed on a steel roof mounting curb assembly which has been shipped to the job site for installation on the roof structure prior to the arrival of the unit. The model number shown on the unit's identification plate identifies the various components of the unit such as refrigeration tonnage, heating input and voltage.

Carefully inspect the unit for damage including damage to the cabinetry. Any bolts or screws which may have loosened in transit must be re-tightened.
In the event of damage, the receiver should:

1. Make notation on delivery receipt of any visible damage to shipment or container.
2. Notify the carrier promptly and request an inspection.
3. In case of concealed damage, the carrier should be notified as soon as possible-preferably within 5 days.
4. File the claim with the following supporting documents:
   a. Original Bill of Lading, certified copy, or indemnity bond.
   b. Original paid freight bill or indemnity in lieu thereof.
   c. Original invoice or certified copy thereof, showing trade and other discounts or reductions.
   d. Copy of the inspection report issued by the carrier representative at the time damage is reported to the carrier. The carrier is responsible for making prompt inspection of damage and for a thorough investigation of each claim. The distributor or manufacturer will not accept claims from dealers for transportation damage.

NOTE: When inspecting the unit for transportation damage, remove all packaging materials. Recycle or dispose of the packaging material according to local codes.

Terminal Venting

Never operate the compressor without the terminal cover secured and properly in place or without the electrical plug fully seated and engaged to the terminal posts. If a terminal is damaged, electrically overloaded, or short circuits to ground, there is a remote possibility that the terminal can be suddenly expelled from the terminal housing thereby venting the refrigerant and compressor oil mixture to atmosphere. This discharge can be ignited from electrical arcing, or other open sources of ignition, and can cause potentially severe or fatal injury. This event is known as Terminal Venting. To reduce the possibility of external ignition, all open flames or other heat sources must be extinguished, and all electrical power must be turned off and made to comply with "lockout-

tagout" procedure prior to opening the terminal cover or removing the electrical plug and servicing the system.
Proper sealed system evacuation is required during equipment service to maintain adequate internal system cleanliness while eliminating contaminates. Be alert for sounds of arcing (sizzling, sputtering, or popping) inside the compressor. IMMEDIATELY GET AWAY from the unit if you hear these sounds and disconnect electrical power.

Pre-Installation Checks

Carefully read all instructions for the installation prior to installing unit. Ensure each step or procedure is understood and any special considerations are taken into account before starting installation. Assemble all tools, hardware and supplies needed to complete the installation. Some items may need to be purchased locally.

Wiring

Check that wiring will not be subject to wear, corrosion, excessive pressure, vibration, sharp edges or any other adverse environmental effects. The check shall also take into account the effects of aging or continual vibration from sources such as compressors or fans.

Detection of flammable refrigerants

"Under no circumstances shall potential sources of ignition be used in the searching for or detection of refrigerant leaks. A halide torch (or any other detector using a naked flame) shall not be used.

The following leak detection methods are deemed acceptable for all refrigerant systems.

Electronic leak detectors may be used to detect refrigerant leaks but, in the case of FLAMMABLE REFRIGERANTS, the sensitivity may not be adequate, or may need re-calibration. (Detection equipment shall be calibrated in a refrigerant-free area.)

Ensure that the detector is not a potential source of ignition and is suitable for the refrigerant used. Leak detection equipment shall be set at a percentage of the LFL of the refrigerant and shall be calibrated to the refrigerant employed, and the appropriate percentage of gas (25 % maximum) is confirmed.

Leak detection fluids are also suitable for use with most refrigerants but the use of detergents containing chlorine shall be avoided as the chlorine may react with the refrigerant and corrode the copper pipe-work.

If a leak is suspected, all naked flames shall be removed/extinguished.

If a leakage of refrigerant is found which requires brazing, all of the refrigerant shall be recovered from the system.

WARNING

To prevent possible equipment damage, property damage, personal injury or death, the following bullet points must be observed when installing the unit.

IMPORTANT NOTE: Remove wood shipping rails prior to installation of the unit.

NOTE: Units may be installed in heavy snow climates. Ensure no snow obstructs or covers the unit, as it may affect performance. Regularly check for snow build up.

All Installations:
Important Note: ***Unit should be energized 24 hours prior to compressor start up to ensure crankcase heater has sufficiently warmed the compressors. Compressor damage may occur if this step is not followed.***

NOTE: Verify that the voltage listed on the unit's serial plate matches what is provided by the site.

WARNING

The appliance shall be installed. Operated and stored in a room with a floor area not less than the minimum room area.

$\geq 15.3\ m^2$

$164.7\ ft^2$

IMPORTANT: REFER TO THE ALTITUDE ADJUSTED ROOM AREA CALCULATION REFERENCED LATER IN THIS MANUAL.

Proper installation of the unit ensures trouble-free operation. Improper installation can result in problems ranging from noisy operation to property or equipment damages, dangerous conditions that could result in injury or personal property damage and that are not covered by the warranty. Give this booklet to the user and explain it's provisions. The user should retain these instructions for future reference.

- To avoid possible illness or death of the building occupants, do NOT locate outside air intake device (economizer, manual fresh air intake, motorized fresh air intake) too close to an exhaust outlet, gas vent termination, or plumbing vent outlet. For specific distances required, consult local codes.
- Allow minimum clearances from the enclosure for fire protection, proper operation, and service access (see unit clearances). These clearances must be permanently maintained.
- When the unit is heating, the temperature of the return air entering the unit must be a minimum of 55° F.

Ground Level Installations Only:

- When the unit is installed on the ground adjacent to the building, a level concrete (or equal) base is recommended. Prepare a base that is 3" larger than the package unit footprint and a minimum of 3" thick.
- The base should also be located where no runoff of water from higher ground can collect in the unit.

Roof top Installations Only:

- To avoid possible property damage or personal injury, the roof must have sufficient structural strength to carry the weight of the unit(s) and snow or water loads as required by local codes. Consult a structural engineer to determine the weight capabilities of the roof.
- The unit may be installed directly on wood floors or on Class A, Class B, or Class C roof covering material.
- To avoid possible personal injury, a safe, flat surface for service personnel should be provided.

Unit Precautions

- Do not stand or walk on the unit.
- Do not drill holes anywhere in panels or in the base frame of the unit except where indicated. Unit access panels provide structural support.
- Do not remove any access panels until unit has been installed on roof curb or field supplied structure.
- Do not roll unit across finished roof without prior approval of owner or architect.
- Do not skid or slide on any surface as this may damage unit base. The unit must be stored on a flat, level surface. Protect the condenser coil because it is easily damaged.

Roof Curb Installations Only:

Curb installations must comply with local codes and should be done in accordance with the established guidelines of the National Roofing Contractors Association.

Proper unit installation requires that the roof curb be firmly and permanently attached to the roof structure. Check for adequate fastening method prior to setting the unit on the curb.

Full perimeter roof curbs are available from the factory and are shipped unassembled. Field assembly, squaring, leveling and mounting on the roof structure are the responsibility of the installing contractor. All required hardware necessary for the assembly of the sheet metal curb is included in the curb accessory.

WARNING

To prevent possible equipment damage, property damage, personal injury or death, the following bullet points must be observed when installing the unit.

- Sufficient structural support must be determined prior to locating and mounting the curb and package unit.
- Ductwork must be constructed using industry guidelines. The duct work must be placed into the roof curb before mounting the package unit. Our full perimeter curbs include duct connection frames to be assembled with the curb. Cantilevered type curbs are not available from the factory.
- Curb insulation, cant strips, flashing and general roofing material are furnished by the contractor.
- The curbs must be supported on parallel sides by roof members.
- The roof members must not penetrate supply and return duct opening areas as damage to the unit might occur.

NOTE: The unit and curb accessories are designed to allow vertical duct installation <u>before</u> unit placement. Duct installation <u>after</u> unit placement is not recommended.

CAUTION

All curbs look similar. To avoid incorrect curb positioning, check job plans carefully and verify markings on curb assembly. Instructions may vary in curb styles and supersedes information shown.

See the manual shipped with the roof curb for assembly and installation instructions.

CLEARANCES

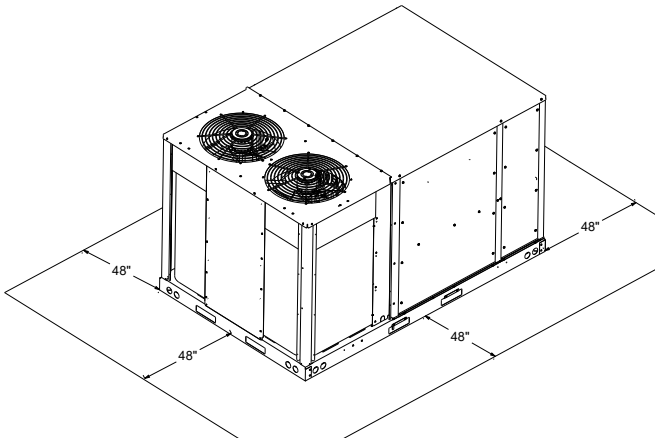

Unit Clearances
Figure 1

**In situations that have multiple units, a 48" minimum clearance is required between the condenser coils.*
Adequate clearance around the unit should be kept for safety, service, maintenance, and proper unit operation. A clearance of 48" is recommended on all sides of the unit to facilitate possible parts replacement, to allow service access and to insure proper ventilation and condenser airflow. The top of the unit should be completely unobstructed. If units are to be located under an overhang, there should be a minimum of 48” clearance and provisions made to deflect the warm discharge air out from the overhang. The unit should be installed remote from all building exhausts to inhibit ingestion of exhaust air into the unit fresh air intake.

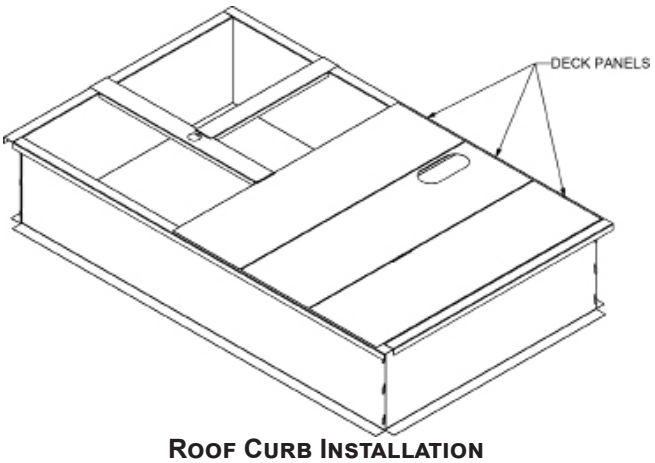

Roof Curb Installation
Figure 2

ROOF CURB POST-INSTALLATION CHECKS

After installation, check the top of the curb, duct connection frame and duct flanges to make sure gasket has been applied properly. Gasket should be firmly applied to the top of the curb perimeter, duct flanges and any exposed duct connection frame. If gasket is loose, re-apply using strong weather resistant adhesive.

Knocked Down Roof Curbs		
UNIT TONNAGE	**DESCRIPTION**	**PART NUMBER**
7.5 to 12.5	Curb 14" Tall	0270L01153
	Curb 24" Tall	0270L01154

Protrusion
Inspect curb to ensure that none of the utility services (electric) routed through the curb protrude above the curb.

NOTE: If fasteners are used to secure the duct to the curb, these should be installed horizontal into the duct curb flange.

CAUTION

If protrusions exist, do not attempt to set unit on curb.

ROOF TOP DUCT CONNECTIONS

Install all duct connections on the unit before placing the unit on rooftop.

Horizontal Discharge
Refer to IOD-7082 included in the literature pack for installing horizontal duct covers.

Flexible duct connectors between the unit and ducts are recommended. Insulate and weatherproof all external ductwork and joints as required and in accordance with local codes.

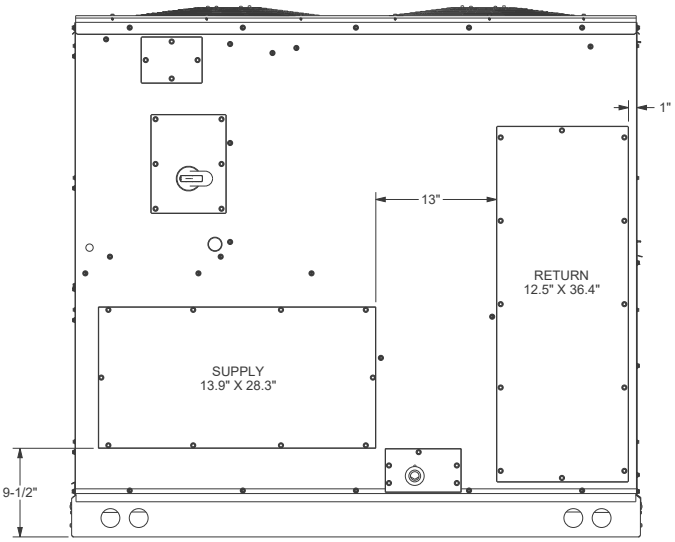

Horizontal Discharge Duct Connections
Figure 3

RIGGING DETAILS

WARNING

To prevent property damage, the unit should remain in an upright position during all rigging and moving operations. To facilitate lifting and moving when a crane is used, place the unit in an adequate cable sling.

CAUTION

Do not lift units two at a time. Provisions for forks have been included in the unit base frame. Minimum fork length is 72" to prevent damage to the unit.

Provisions for forks have been included in the unit base frame. No other fork locations are approved.

WARNING

To prevent possible equipment damage, property damage, personal injury or death, the following bullet points must be observed when installing the unit.

- Unit must be lifted by the four lifting holes located at the base frame corners.
- Lifting cables should be attached to the unit with shackles.
- The distance between the crane hook and the top of the unit must not be less than 60".
- Two spreader bars must span over the unit to prevent damage to the cabinet by the lift cables. Spreader bars must be of sufficient length so that cables do not come in contact with the unit during transport. Remove wood struts mounted beneath unit base frame before setting unit on roof curb. These struts are intended to protect unit base frame from fork lift damage. Removal is accomplished by extracting the sheet metal retainers and pulling the struts through the base of the unit. Refer to rigging label on the unit.
- Your unit may be equipped with a steel shipping brace located underneath the unit (under compressors). If installing on a roof curb, the brace **MUST** be removed. Follow the following instructions for removal.

CAUTION

When unit is suspended, boards and shipping brace will drop when screws are removed. To prevent personal injury, STAND CLEAR. Remove fork hole brackets, boards and shipping brace from bottom of unit before placing unit onto curb.

Before installing this unit on a roof curb:

1. Remove wooden struts per installation instructions. *These are the struts that are located in the fork holes and are used to protect the unit from damage while lifting with forks.*
2. Locate and remove the four (4) screws that attach the shipping brace to the side rails. There will be two (2) screws on each side of the unit. *See Figure 4*

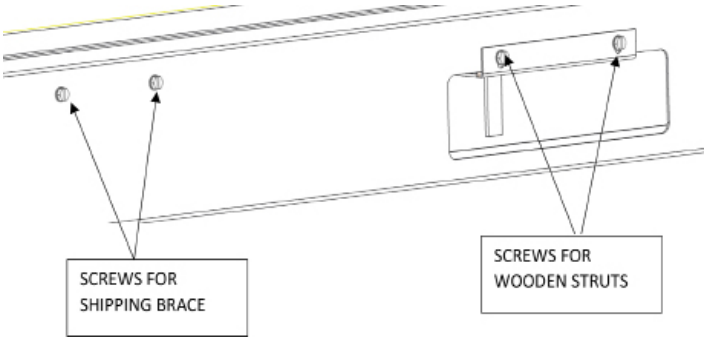

Shipping Brace Screw and Wooden Struts
Figure 4

3. Lift unit per the "Rigging Details" section of the installation instructions, observing all warnings and cautions. Lift the unit high enough off the ground to reach under and grasp the shipping brace.
4. Rotate the brace by tapping the ends until the brace falls free from the unit.
5. Dispose of the brace appropriately.

Important: If using bottom discharge with roof curb, ductwork should be attached to the curb prior to installing the unit. Ductwork dimensions are shown in Roof Curb Installation Instructions.

Refer to the Roof Curb Installation Instructions for proper curb installation. Curbing must be installed in compliance with the National Roofing Contractors Association Manual.

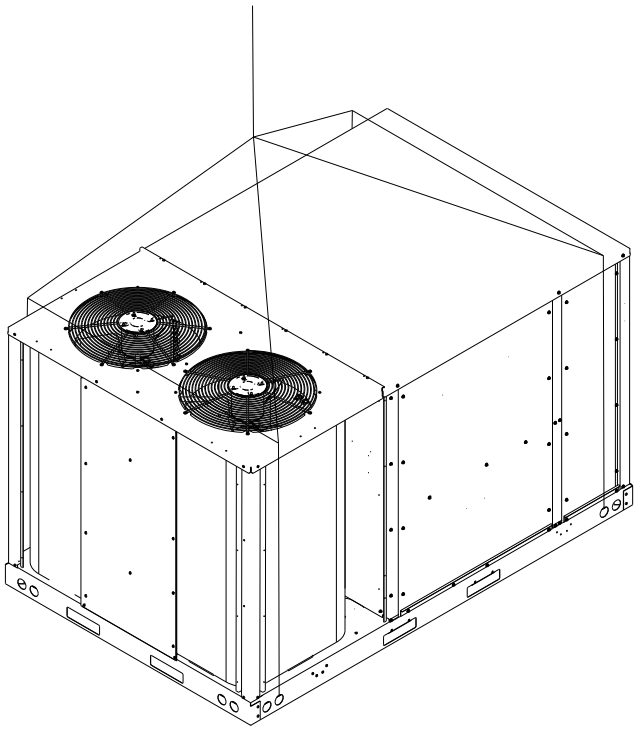

Unit Rigging
Figure 5

To assist in determining rigging requirements, unit weights and center of gravity are shown as follows:

WEIGHTS AND CENTER OF GRAVITY

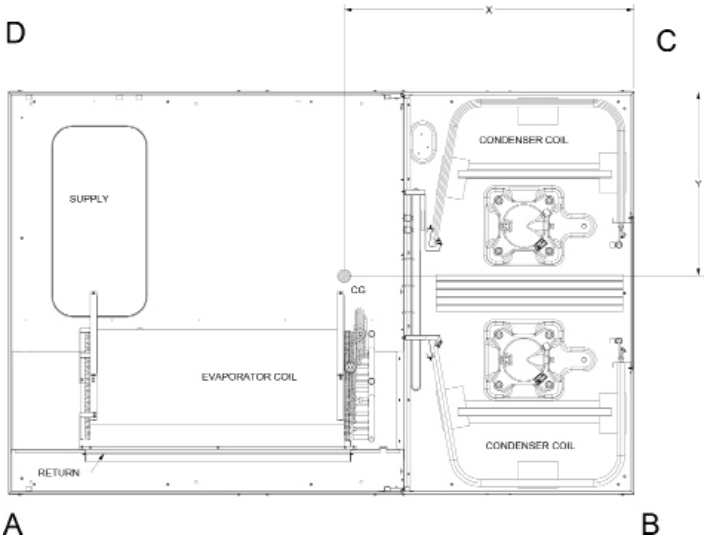

Corner and center of gravity locations
Figure 6

NOTE: Unit should be lifted at a point above center of gravity.

DSC WEIGHTS (lbs)				
Data	7.5T	8.5T	10T	12.5T
Corner weight- A	243.25	363.25	229.25	231.25
Corner weight- B	226.25	142.25	280.25	306.25
Corner weight- C	274.25	202.25	235.25	274.25
Corner weight- D	271.25	319.25	325.25	341.25
Unit operating weight	1015	1027	1070	1153
Unit shipping weight	1087	1099	1142	1225
X Center (inches)	30.6	30.6	30.6	30.6
Y Center (inches)	42.7	42.7	42.7	42.7

DSH WEIGHTS (lbs)			
Data	7.5T	8.5T	10T
Corner weight- A	254	254	257
Corner weight- B	271	271	274
Corner weight- C	349	349	352
Corner weight- D	283	283	286
Unit operating weight	1157	1157	1169
Unit shipping weight	1229	1229	1241
X Center (inches)	27.8	27.8	27.8
Y Center (inches)	41.3	41.3	41.3

The numbers may slightly vary depending on installed options. These weights are without accessories installed.

CAUTION

To prevent severe damage to the bottom of the unit, do not fork lift unit after wood struts have been removed.

Bring condenser end of unit into alignment with the curb first. Lower unit carefully onto roof mounting curb. When a rectangular cantilever curb is used, care should be taken to center the unit. Check for proper alignment and orientation of supply and return openings with duct.

Rigging Removal

CAUTION

To prevent damage to the unit, do not allow crane hooks and spreader bars to rest on the roof of the unit.

Remove spreader bars, lifting cables and other rigging equipment.

ELECTRICAL WIRING

WARNING

HIGH VOLTAGE!
Disconnect all power before servicing or installing this unit. Multiple power sources may be present. Failure to do so may cause property damage, personal injury or death.

WARNING

HIGH VOLTAGE!
To avoid personal injury or death due to electrical shock, do not tamper with factory wiring. The internal power and control wiring of these units are factory-installed and have been thoroughly tested prior to shipment. Contact your local representative if assistance is required.

CAUTION

To prevent damage to the wiring, protect wiring from sharp edges. Follow national electrical code and all local codes and ordinances. Do not route wires through removable access panels.

CAUTION

Conduit and fittings must be weather-tight to prevent water entry into the building.

For unit protection, use a fuse or HACR circuit breaker that is in excess of the circuit ampacity, but less than or equal to the maximum overcurrent protection device. DO NOT EXCEED THE MAXIMUM OVERCURRENT DEVICE SIZE SHOWN ON UNIT DATA PLATE.

All line voltage connections must be made through weatherproof fittings. All exterior power supply and ground wiring must be in approved weatherproof conduit.

The main power supply wiring to the unit and low voltage wiring to accessory controls must be done in accordance with these instructions, the latest edition of the National Electrical Code (ANSI/NFPA 70), and all local codes and ordinances.

The main power supply shall be three-phase, three wire with a proper ground.

The unit is factory wired for the voltage shown on the unit's data plate.

NOTE: If supply voltage is 208V, lead on primary of transformer(s) must be moved from the 240V to the 208V tap. Refer to wiring diagram on unit for details.

Main power wiring should be sized for the minimum circuit ampacity shown on the unit's database. Size wires in accordance with the ampacity tables in Article 310 of the National Electrical Code. If long wires are required, it may be necessary to increase the wire size to prevent excessive voltage drop. Wires should be sized for a maximum of 3% voltage drop.

CAUTION

To avoid risk of property damage, personal injury or fire, use only copper conductors.

CAUTION

To prevent improper and dangerous operation due to wiring errors, label all wires prior to disconnection when servicing controls. Verify proper operation after servicing.

NOTE: A weather-tight disconnect switch, properly sized for the unit total load, must be field or factory installed. An external field supplied disconnect may be mounted on the exterior panel.

Ensure the data plate is not covered by the field-supplied disconnect switch.

- Some disconnect switches are not fused. Protect the power leads at the point of distribution in accordance with the unit data plate.
- The unit must be electrically grounded in accordance with local codes or, in the absence of local codes, with the latest edition of the National Electrical Code ANSI/NFPA 70, and/or the Canadian Electrical Code, CSA C22.1, Part 1. A ground lug is provided for this purpose. Do not use the ground lug for connecting a neutral conductor.
- Connect power wiring to the electrical power block located within the main control box.

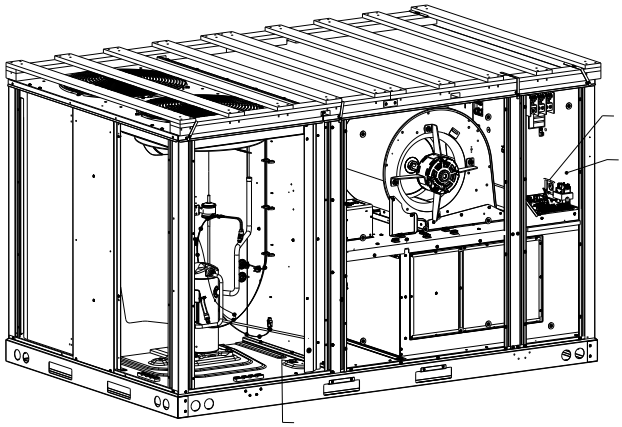

Figure 7A

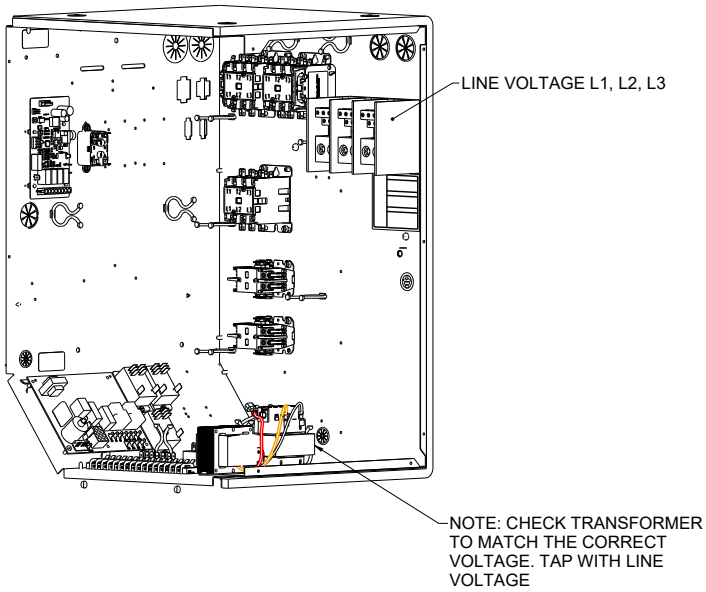

CONTROL BOX
Figure 7B

NOTE: DEPENDING ON THE OPTIONS INSTALLED, THE LOCATION OF THE COMPONENTS MAY VARY IN SOME MODELS.

WARNING

Failure of unit due to operation on improper line voltage or with excessive phase unbalance constitutes product abuse and may cause severe damage to the unit electrical components.

Areas Without Convenience Outlet

It is recommended that an independent 115V power source be brought to the vicinity of the roof top unit for portable lights and tools used by the service mechanic.

NOTE: Refer to local codes for requirements. These outlets can also be factory installed.

Units installed on Roof Tops

Main power and low voltage wiring may enter the unit through the condenser end of unit or through the roof curb. Install conduit connectors through the designated base pan entrance location. External connectors must be weatherproof. All holes in the unit base must be sealed (including those around conduit nuts) to prevent water leakage into building. All required conduit and fittings are to be field supplied.

Supply voltage to roof top unit must not vary by more than 10% of the value indicated on the unit data plate. Phase voltage unbalance must not exceed 2%. Contact your local power company for correction of improper voltage or phase unbalance.

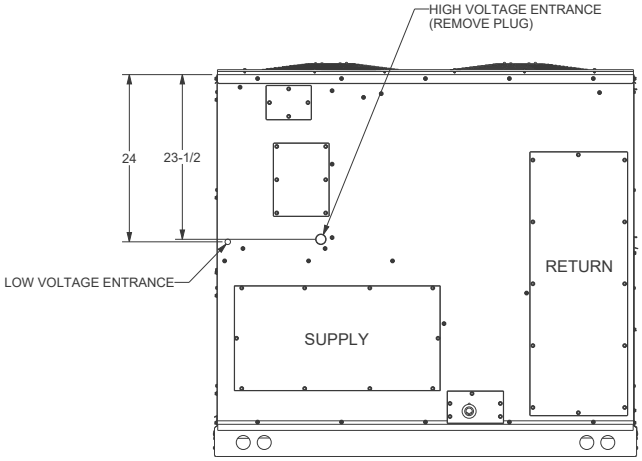

Figure 8A

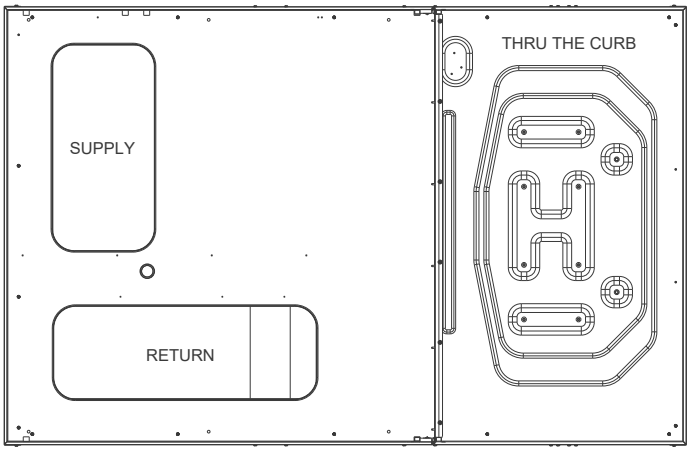

ELECTRICAL ENTRANCE AND THRU CURB
Figure 8B

"Through the Base Pan Kit" Part Numbers
TTBCKHE02
TTBCKHE02FI (Factory Kit)

Low Voltage Control Wiring

1. A 24V thermostat must be installed for unit operation.
2. Locate thermostat or remote sensor in the conditioned space where it will sense average temperature. Do not locate the device where it may be directly exposed to supply air, sunlight or other sources of heat. Follow

installation instructions packaged with the thermostat.

3. Use #18 AWG wire for 24V control wiring runs not exceeding 75 feet. Use #16 AWG wire for 24V control wiring runs not exceeding 125 feet. Use #14 AWG wire for 24V control wiring runs not exceeding 200 feet. Low voltage wiring may be National Electrical Code (NEC) Class 2 where permitted by local codes.
4. Route thermostat wires from sub-base terminals to the unit. Control wiring should enter through the condenser panel opening or through curb indicated in “Electrical Entrance and Thru Curb” Figure 8B. Connect thermostat and any accessory wiring to low voltage terminal block TB1 in the main control box.

NOTE: Field-supplied conduit may need to be installed depending on unit/curb configuration. Use #18 AWG solid conductor wire whenever connecting thermostat wires to terminals on sub-base. DO NOT use larger than #18 AWG wire. A transition to #18 AWG wire may be required before entering thermostat sub-base.

NOTE: Refer to unit wiring diagrams for thermostat or remote sensor connections.

CIRCULATING AIR AND FILTERS

Ductwork

The supply duct from the unit through a wall may be installed without clearance. However, minimum unit clearances must be maintained (see “Clearances" section). The supply duct should be provided with an access panel large enough to inspect the air chamber downstream of the heat exchanger. A cover should be tightly attached to prevent air leaks. False ceilings or drop ceilings may be used as a return air plenum.

NOTE: Adequate return grills have to be supplied for each room for proper return for that space.

Ductwork dimensions are shown in the roof curb installation manual.

If desired, supply and return duct connections to the unit may be made with flexible connections to reduce possible unit operating sound transmission.

CONDENSATE DRAIN CONNECTION

Condensate Drain Connection

A 3/4" female NPT drain connection is supplied on the end of the unit and bottom of the drain pan for condensate piping. An external trap must be installed for proper condensate drainage. Hand tighten drain fitting to the drain connection.

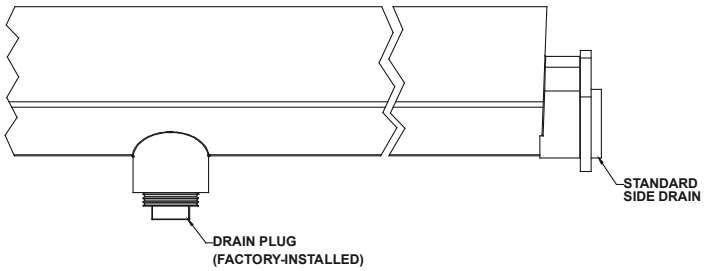

Drain Pan (Side View)
Figure 9

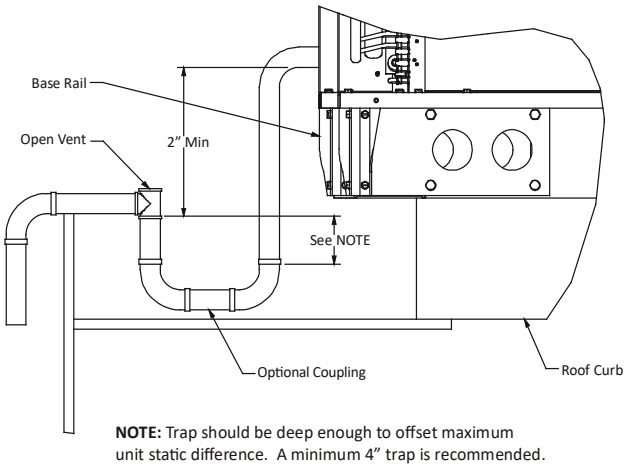

drain connection
Figure 10

Install condensate drain trap as shown. Use 3/4" drain line and fittings or larger. Do not operate without trap.

Horizontal Drain

Drainage of condensate directly onto the roof may be acceptable; refer to local code. It is recommended that a small drip pad of either stone, mortar, wood or metal be provided to prevent any possible damage to the roof.

Vertical Drain

To use the bottom drain connection, remove the drain plug from the bottom connection and install it in the horizontal connection. Refer to local code for proper drain routing.

NOTE: All threaded connections use pipe sealer.

Cleaning

Due to the fact that the drain pans in any air conditioning unit will have some moisture in them, algae and fungus will grow due to airborne bacteria and spores. Periodic cleaning is necessary to prevent the build-up from plugging the drain.

To remove the drain pan for cleaning, remove the drain pan cover first (located on duct panel) then slide out the drain pan.

STARTUP, ADJUSTMENTS, AND CHECKS

Pre-Startup Instructions - General

Prior to the beginning of Startup, Adjustment, and Checks procedures, the following warnings, steps, and checks should be read and completed.

WARNING

HIGH VOLTAGE!
To avoid personal injury or death due to electrical shock, bond the frame of this unit to the building electrical ground by use of the grounding terminal provided or other acceptable means. Disconnect all power before servicing or installing this unit.

CAUTION

To prevent property damage or personal injury, do not start the unit until all necessary pre-checks and tests have been performed.

WARNING

MOVING MACHINERY HAZARD!
To prevent possible personal injury or death, disconnect power to the unit and padlock in the "OFF" position before servicing fans.

On new installations, or if a major component has been replaced, the operation of the unit must be checked.

Check unit operation as outlined in the following instructions. If any sparking, odors, or unusual sounds are encountered, shut off electrical power and recheck for wiring errors, or obstructions in or near the blower motors. **Duct covers must be removed before operating unit in horizontal duct applications. (This only applies to units that have horizontal duct attached.)**

The Startup, Adjustments, and Checks procedure provides a step-by-step sequence which, if followed, will assure the proper startup of the equipment in the minimum amount of time. Air balancing of duct system is not considered part of this procedure. However, it is an important phase of any air conditioning system startup and should be performed upon completion of the Startup, Adjustments, and Checks procedure. The Startup, Adjustments, and Checks procedure at outside ambients below 55°F should be limited to a readiness check of the refrigeration system with the required final check and calibration left to be completed when the outside ambient rises above 55°F.

Temporary Heating Or Cooling

If the unit is to be used for temporary heating or cooling, a "Startup, Adjustments, and Checks" must first be performed in accordance with this manual. Damage or repairs due to failure to comply with these requirements are not covered under the warranty. **After** the machines are used for temporary heating or cooling, inspect the coils, fans, and motors for unacceptable levels of construction dust and dirt and install new filters.

Contractor Responsibility

The installing contractor must be certain that:

- All supply and return air ductwork is in place, properly sealed, and corresponds with installation instructions.
- All thermostats are mounted and wired in accordance with installation instructions.
- All electric power, all gas, and the condensate drain installation have been made to each unit on the job. These main supply lines must be functional and capable of operating all units simultaneously.
- Air filters are in place.

Roof Curb Installation Check

Inspect the roof curb for correct installation. The unit and curb assembly should be level. Inspect the flashing of the roof mounting curb to the roof, especially at the corners, for good workmanship. Also check for leaks around gaskets. Note any deficiencies in a separate report and forward to the contractor.

Obstructions, Fan Clearance and Wiring

Remove any extraneous construction and shipping materials that may be found during this procedure. Rotate all fans manually to check for proper clearances and that they rotate freely. Check for bolts and screws that may have jarred loose during shipment to the job site. Re-tighten if necessary. Re-tighten all electrical connections.

Field Duct Connections

Verify that all duct connections are tight and that there is no air bypass between supply and return.

Filter Section Check

Remove filter section access panels and check that filters are properly installed. Note airflow arrows on filter frames.

Pre-startup Precautions

It is important for your safety that the unit has been properly grounded during installation. Check ground lug connection in main control box for tightness prior to closing circuit breaker or disconnect switch. Verify that supply voltage on line side of disconnect agrees with voltage on unit identification plate and is within the utilization voltage range as indicated in Appendix B Electrical Data.

System Voltage - The nominal voltage value assigned to a circuit or system for the purpose of designating its voltage class.

Nameplate Voltage - The voltage assigned to a piece of equipment for the purpose of designating its voltage class and for the purpose of defining the minimum and maximum voltage at which the equipment will operate.

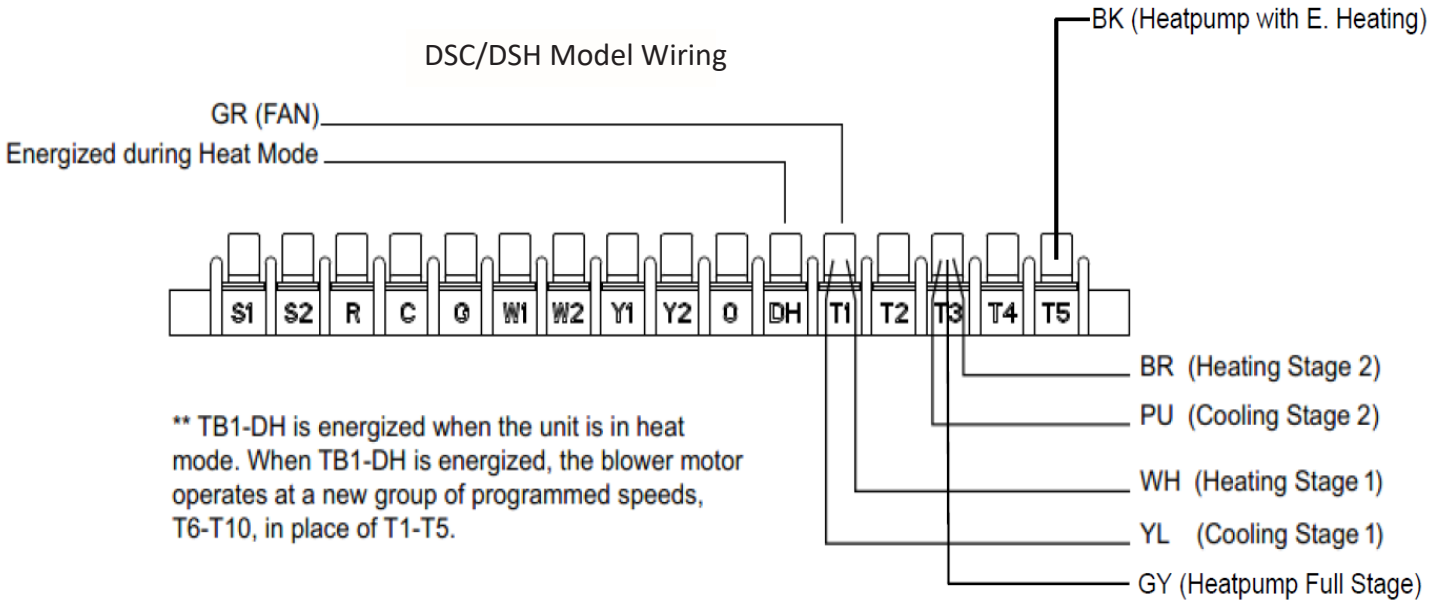

Utilization Voltage - The voltage of the line terminals of the equipment at which the equipment must give fully satisfactory performance. Once it is established that supply voltage will be maintained within the utilization range under all system conditions, check and calculate if an unbalanced condition exists between phases. Calculate percent voltage unbalance as follows.

Three Phase Models Only

$$\text{3) PERCENT VOLTAGE UNBALANCE} = 100 \times \frac{\text{2) MAXIMUM VOLTAGE DEVIATIONS FROM AVERAGE VOLTAGE}}{\text{1) AVERAGE VOLTAGE}}$$

HOW TO USE THE FORMULA:
EXAMPLE: Line to Neutral Voltage of 220, 216, and 213
1) Average Voltage = 220+216+213=649 / 3 = 216
2) Maximum Voltage Deviations from Average Voltage = 220 - 216 = 4

$$\text{3) Percent Voltage Unbalance} = 100 \times \frac{4}{216} = \frac{400}{216} = 1.8\%$$

Percent voltage unbalance MUST NOT exceed 2%.

Control Voltage Check

Close the disconnect switch to energize control transformer. Check primary and secondary (24V) of control transformer.

AIR FLOW ADJUSTMENTS

When the final adjustments are complete, the current draw of the motor should be checked and compared to the full load current rating of the motor. The amperage must not exceed the service factor stamped on the motor nameplate. The total airflow must not be less than that required for operation of the electric heater. Refer to Appendix D.

If an economizer is installed, check the unit operating balance with the economizer at full outside air and at minimum outside air.

NOTE: Never run high stage CFM below 300 CFM per ton, evaporator freezing or poor unit performance is possible.

EEM - Standard Static Drive Motor

Adjust the CFM for the unit by changing the position of the low voltage leads on the terminal block TB1. Refer to Appendix A for blower performance at each speed tap. The table below shows RECOMMENDED SPEED TAPS for heating and cooling. Refer to Appendix D for maximum and minimum allowed airflow for heating and cooling.

BLOWER SPEED SELECTION

The unit has one set of taps for cooling (T1-T5) , taps for heatpump (T3-T5) and a second set of taps for electric heater heating - (E.Heat) (T6-T10). When electric heat is called TB1-W1 will also call TB1-DH activating the second set of taps T6-T10. If ever the cooling and E.heating is called at the same time (defrost) heating taps will take priority and T6-T10 will be chosen by default. Tap T1 and T2 are for low cool operation (cooling stage 1) and Taps T3 to T5 are for high cool operation (cooling stage 2). Similar taps Taps T3 to T5 are for heatpump operation (heatpump full stage). Tap T6 and T7 are for low heat operation (electric heat stage 1) and T8 to T10 are for high heat operation (electric heat stage 2). Tap T8 to T10 are for Defrost operation. Tap 10 for heatpump with electric heat. Taps are selected by changing the position of the low voltage leads on the terminal block TB1. Refer to Appendix A for blower performance at each speed tap.

NOTE: If more than one lead is energized simultaneously, the motor will run at the higher numerical speed value.

Fan speed for G (GR) is fixed at TB1-T1 and cannot be moved.

Low Cool, Yellow (YL) is moveable and set to TB1-T1.

Low Heat, White (WH) is moveable and set to TB1-T6.

High Cool, Purple (PU) is moveable and set to TB1-T3.

High Heat, Brown (BR) is moveable and set to TB1-T8.

High Cool with EHeat, Purple (PU) is moveable and set to TB1-T8.

Heatpump Heat, Gray (GY) is moveable and set to TB1-T3.

Heatpump with EHeat, Black (BK) is moveable and set to TB1-T10. These wires can be moved together or separately and placed on any unoccupied terminal.

NOTE: YL can be moved to tap T3 as long as YL does not share the tap with PU. WH can be moved to tap T7 as long as WH does not share the tap with BR.

If high cool operation is set at Tap T4 or T5, low cool operation must be set at T2.

If high heat operation is set at T9 or T10, low heat operation must be set at T7.

Set Evaporator Fan Rpm

Actual RPM's must be set and verified with a tachometer or strobe light. Refer to Appendix A for basic unit fan RPM. Refer also to "Airflow" section of this manual. With disconnect switch open, disconnect thermostat wires from terminals Y and W. This will prevent heating and mechanical cooling from coming on. Place a jumper wire across terminals R and G at TB1 terminal block. Close disconnect switch; evaporator fan motor will operate so RPM can be checked.

Electrical Input Check

Make preliminary check of evaporator fan ampere draw and verify that motor nameplate amps are not exceeded. A final check of amp draw should be made upon completion of air balancing of the duct system (see Appendix B).

Air Conditioning Start-Up Procedure and Checklist

Begin with power turned off at all disconnects.

1. Turn thermostat system switch to "Cool," and fan switch to "Auto" and turn temperature setting as high as it will go.
2. Inspect all registers and set them to the normal open position.
3. Turn on the electrical supply at the disconnect.
4. Turn the fan switch to the "ON" position. The blower should operate after a 7 second delay.
5. Turn the fan switch to "Auto" position. The blower should stop after a 60 second delay.
6. Slowly lower the cooling temperature until first stage COOL (LOW COOL) starts. The blower, first stage fan, and first stage compressor should now be operating. Allow the unit to run 10 minutes, make sure cool air is being supplied by the unit. Check compressor rotation by verifying pressure difference between suction and discharge
7. Lower the cooling temperature further until second stage COOL (HIGH COOL) starts. The blower, both fans, and both compressors should now be operating. Allow the unit to run 10 minutes, make sure cool air is being supplied by the unit.
8. Check that each compressor is operating correctly. The scroll compressors in these units MUST operate in the proper rotation. To ensure the compressors are operating in the correct direction, check the compressor discharge line pressure or temperature after the compressor is started. The discharge pressure and discharge line temperature should increase. If this does not occur and the compressor is producing an exceptional amount of noise, perform the following checks
   - If a single compressor is operating backwards, check the power wiring for that compressor and correct any leads that have been interchanged at the contactor.
   - If both of the compressors are operating backward, disconnect the unit power supply and lock-out tagout in the OFF position. Switch two leads of the power supply at the unit Single Point Power Block. Reconnect power and check for compressor operation.
9. Turn the temperature setting to the highest position, stopping the unit. The indoor blower will continue to run for 60 seconds.
10. Turn the thermostat system switch to "OFF" and disconnect all power when servicing the unit.

WARNING

HIGH VOLTAGE!
Disconnect all power before servicing or installing this unit. Multiple power sources may be present. Failure to do so may cause property damage, personal injury or death.

Heat Pump Start-Up Procedure

1. Check the cooling mode for the heat pump in the same manner as above. The reversing valve is energized when the thermostat is placed in the cooling position. A clicking sound should be noticeable from the reversing valve. By lowering the temperature setting to call for cooling, the contactor is energized. The compressor, blower and fan should then be running. After the cooling mode is checked out, turn the thermostat system switch to "OFF".

2. Turn the thermostat system switch to “HEAT” and fan switch to “AUTO”.
3. Slowly raise the heating temperature setting. When the heating first stage makes contact, stop raising the temperature setting. The compressor, blower and fan should now be running with the reversing valve in the de-energized (heating) position. After giving the unit time to settle out, make sure the unit is supplying heated air.
4. If the outdoor ambient is above 80°F, the unit may trip on its high pressure cut out when on heating. The compressor should stop. The heating cycle must be thoroughly checked, so postpone the test to another day when conditions are more suitable but DO NOT FAIL TO TEST.
   If the outdoor ambient is low and the unit operates properly on the heating cycle, you may check the pressure cutout operation by blocking off the indoor return air until the unit trips.
5. If unit operates properly in the heating cycle, raise the temperature setting until the heating second stage makes contact. Supplemental resistance heat, if installed should now come on. Make sure it operates properly.
   NOTE: If outdoor thermostats are installed the outdoor ambient must be below the set point of these thermostats for the heaters to operate. It may be necessary to jumper these thermostats to check heater operation if outdoor ambient is mild.
6. For thermostats with emergency heat switch, return to step 11. The emergency heat switch is located at the bottom of the thermostat. Move the switch to emergency heat. The heat pump will stop, the blower will continue to run, all heaters will come on and the thermostat emergency heat light will come on.
7. If checking the unit in the wintertime, when the outdoor coil is cold enough to actuate the defrost control, observe at least one defrost cycle to make sure the unit defrosts completely.

Refrigeration Sequence Check

With the disconnect switch open, remove the field connected thermostat wire from terminal R on TB1 terminal block. Place a jumper across terminals R and G, and across R and Y on TB1 terminal block. Close the disconnect switch. The following operational sequence should be observed:

1. Current through primary winding of transformer TRANS1 energizes the 24-volt control circuit.
2. To simulate a mechanical call for cooling from the wall thermostat, place a jumper across terminals R and Y1 of terminal block TB1.
3. **UNIT WITH ECONOMIZER OPTION:** The compressor circuit is interlocked through terminals 3 and 4 of the economizer module. If the outdoor air enthalpy (temperature and humidity) is not suitable for cooling, the economizer terminals will be closed permitting compressor to be energized.
4. The blower contactor closes its contacts L1, L2 and L3 to T1, T2 and T3 to provide power to the supply fan motor.
5. Supply fan rotation should not be used to identify proper phasing of the unit. For phasing, please refer to step 7 below. If the supply fan is rotating in the wrong direction, please contact your local distributor or tech services for instructions.
6. Compressor contactor closes its contacts L1, L2 and L3 to T1, T2 and T3 to provide power to the compressor motor COMP 1; COMP 2, if conditions are correct. In addition, contactor C1 closes its contact L3 to T3 , energizing the condenser fan motor.

WARNING

BURN HAZARD!
DO NOT TOUCH! DISCHARGE LINE MAY BE HOT!

7. Check that each compressor is operating correctly. The scroll compressors in these units MUST operate in the proper rotation. To ensure the compressors are operating in the correct direction, check the compressor discharge line pressure or temperature after each compressor is started.
   The discharge pressure and discharge line temperature should increase. If this does not occur and the compressor is producing an exceptional amount of noise, perform the following checks.
   - Ensure all compressors and the supply fan motor are operating in the proper direction. If a single motor is operating backwards, check the power wiring for that motor and correct any leads that have been interchanged at the contactor or at the motor.
   - If all of the motors are operating backward, disconnect the unit power supply and lock it in the “OFF” position. Switch two leads of the power supply at the unit Single Point Power Block. Reconnect power and check for compressor and supply fan motor operation.
8. With all safety devices closed, the system will continue cooling operation until the thermostat is satisfied.
9. Disconnecting the jumper wire between R and Y1 and Y2 and between R and G on TB1 terminal block will simulate a satisfied thermostat. The compressors will cycle off and IIC (pin 12) will initiate its time delay cycle. The compressor and the supply fan will cycle off.
10. After a time delay of approximately 3 minutes, the compressor control circuits will be ready to respond to a subsequent call for cooling from the wall thermostat.
11. Open disconnect switch. Reconnect the field thermostat wire at terminal R on terminal block TB1.

NOTE: While in the Cooling Mode, to prevent frost from forming on the evaporator while the unit is operating in outdoor temperatures of 65°F or

lower, it is recommended that a low ambient kit (LAKT-**) is used. This is strongly recommended for 2 Speed models due to the lower airflow while in the first stage cooling. To further protect the compressor from damage during low ambient conditions, a Freezestat Kit (FSK01) can be added that turns the compressor off when the evaporator temperature drops too low.

WARNING

HIGH VOLTAGE!
Disconnect all power before servicing or installing this unit. Multiple power sources may be present. Failure to do so may cause property damage, personal injury or death.

Final System Checks

1. Check to see if all supply and return air grilles are adjusted and the air distribution system is balanced for the best compromise between heating and cooling.
2. Check for air leaks in the ductwork. See Sections on Air Flow Adjustments.
3. Make sure the unit is free of "rattles", and the tubing in the unit is free from excessive vibration. Also make sure tubes or lines are not rubbing against each other or sheet metal surfaces or edges. If so, correct the trouble.
4. Set the thermostat at the appropriate setting for cooling and heating or automatic changeover for normal use.
5. Be sure the Owner is instructed on the unit operation, filter, servicing, correct thermostat operation, etc.

CHECKING SUBCOOLING

NOTE: Units with a TXV should be charged to Subcooling only. Make sure the air flow is correct before making any adjustments.

EXAMPLE:

a. Liquid Line Pressure = 417 PSI
b. Corresponding Temp. = 120°F
c. Thermometer on Liquid line = 109°F.

To obtain the amount of subcooling, subtract 109°F from 120°F. The difference is 11° subcooling.

See the specification sheet or technical information manual for the design subcooling range for your unit.

SUBCOOLING FORMULA = SATURATED LIQUID LINE TEMPERATURE - LIQUID LINE TEMPERATURE

CHECKING SUPERHEAT

EXAMPLE:

a. Suction Pressure = 143 PSI
b. Corresponding Temp. = 50°F
c. Thermometer on Suction Line = 59°F

To obtain the degrees temperature of superheat, subtract 50.0 from 59.0°F. The difference is 9° Superheat. The 9° Superheat would fall in the ± range of allowable superheat.

SUPERHEAT = SUCTION LINE TEMP - SAT. SUCTION TEMP.

Superheat Adjustment

NOTE: Superheat adjustments should not be made until indoor ambient conditions have stabilized and correct airflow has been verified. This could take up to 24 hours depending on indoor temperature and humidity. Before checking superheat, run the unit in cooling for 15-20 minutes or until refrigerant pressures stabilize. Use the following guidelines and methods to check unit operation and ensure that the refrigerant charge is within limits.

For TXV systems, to adjust superheat, unscrew the cover from the expansion valve, locate the adjustment screw, and turn it clockwise (in) to increase superheat or counterclockwise (out) to decrease superheat. It is recommended to make small adjustments at a time, 1/8-1/4 turn increments. Replace adjustment cap. Wait a minimum of 15 minutes between adjustments to allow time for the TXV and pressures to stabilize.

Refrigerant Charge Check

Note: For optimal performance, follow charging instructions below.

(Units with Fixed Orifice Devices)

All package units with fixed orifice devices are charged using the superheat method at the compressor suction line. To increase super heat, remove charge and to decrease super heat, add charge. After superheat is adjusted, it is recommended to check unit subcooling at the condenser coil liquid line. See Design Superheat and Subcooling table for targets on each model.

(Units with Expansion Valve (TXV))

Two Stage Cooling Application : Run unit on HIGH Stage cooling and refer to Design Superheat & Subcooling table

1. Purge gauge lines. Connect service gauge manifold to access fittings. Run system at least 15 minutes to allow pressure to stabilize.
2. Temporarily install thermometer on liquid (small) line near liquid line access fitting with adequate contact and insulate for best possible reading.
3. Check subcooling and superheat. System should have a subcooling and superheat within the range listed on the Design Superheat and Subcooling table.

   a. If subcooling and superheat are low, adjust TXV superheat, then check subcooling.
   NOTE: To adjust superheat, turn the valve stem clockwise to increase and

COUNTERCLOCKWISE TO DECREASE.

b. If subcooling is low and superheat is high, add charge to raise subcooling then check superheat.
c. If subcooling and superheat are high, adjust TXV valve superheat, then check subcooling.
d. If subcooling is high and superheat is low, adjust TXV valve superheat and remove charge to lower the subcooling.

NOTE: Do NOT adjust the charge based on suction pressure unless there is a gross undercharge. If an under charge is suspected recover the charge, re-evacuate the system and recharge per data plate. No adjustments should be made if suspecting a charge issue.

4. Disconnect manifold set, installation is complete.

Design Superheat and Subcooling for AC					
Model	Superheat ±2°F (Circuit 1/2)	Subcooling ±1°F (Circuit 1/2)	Expansion Device	Cooling Stage	Outdoor ambient (°F)
DSC090	17/16	12/14	TXV	High	95
DSC102	16/19	11/12	TXV	High	95
DSC120	18/22	16/15	TXV	High	95
DSC150	17/19	11/12	TXV	High	95

Design Superheat and Subcooling for HP models in Cooling Mode					
Model	Superheat ±2°F (Circuit 1/2)	Subcooling ±1°F (Circuit 1/2)	Expansion Device	Cooling Stage	Outdoor ambient (°F)
DSH090	26/22	12/11	TXV	High	95
DSH102	18/18	10/11	TXV	High	95
DSH120	19/22	8/10	TXV	High	95

HEAT PUMP OPERATION

Cooling Cycle

When the heat pump is in the cooling cycle, it operates exactly as a Summer Air Conditioner unit. In this mode, all the charts and data for service that apply to summer air conditioning apply to the heat pump. Most apply on the heating cycle except that “condenser” becomes “evaporator”, “evaporator” becomes “condenser”, “cooling” becomes “heating”.

Heating Cycle

The heat pump operates in the heating cycle by redirecting refrigerant flow through the refrigerant circuit external to the compressor. This is accomplished with the reversing valve. Hot discharge vapor from the compressor is directed to the indoor coil (evaporator on the cooling cycle) where the heat is removed, and the vapor condenses to liquid. It then goes through the expansion device to the outdoor coil (condenser on the cooling cycle) where the liquid is evaporated, and the vapor goes to the compressor.

When the solenoid valve coil is operated either from heating to cooling or vice versa, the piston in the reversing valve to the low pressure (high pressure) reverse positions in the reversing valve.

Figures 11A and 11B show a schematic of a heat pump on the cooling cycle and the heating cycle. In addition to a reversing valve, a heat pump is equipped with an expansion device and check valve for the indoor coil, and similar equipment for the outdoor coil. It is also provided with a defrost control system.

The expansion devices are flowrator distributors and perform the same function on the heating cycle as on the cooling cycle. The flowrator distributors also act as check valves to allow for the reverse of refrigerant flow.

COOLING

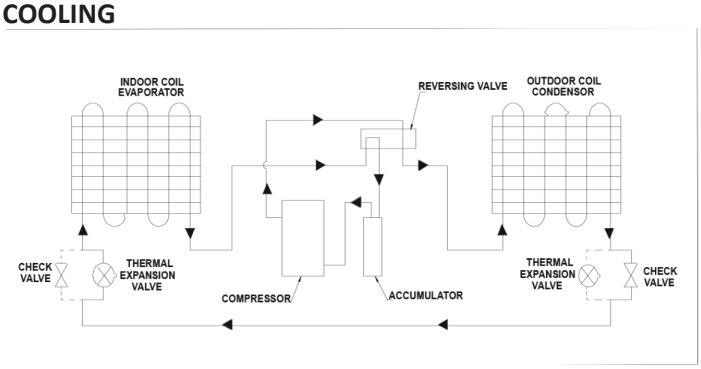

Figure 11A

HEATING

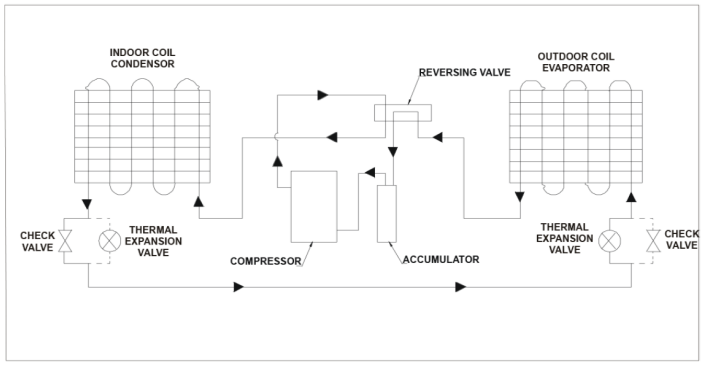

Unit Heating and Cooling Cycles
Figure 11B

When the heat pump is on the heating cycle, the outdoor coil is functioning as an evaporator. The temperature of the refrigerant in the outdoor coil must be below the temperature of the outdoor air in order to extract heat from the air. Thus, the greater the difference in the outdoor temperature and the outdoor coil temperature, the greater the heating capacity of the heat pump. This phenomenon is a characteristic of a heat pump. It is a good practice to provide supplementary heat for all heat pump installations in areas where the temperature drops below 45° F. It is also a good practice to provide sufficient supplementary heat to handle the entire heating requirement should there be a component failure of the heat pump, such as a compressor, or refrigerant leak, etc.

Since the temperature of the refrigerant in the outdoor coil on the heating cycle is generally below freezing point,

frost forms on the surfaces of the outdoor coil under certain weather conditions of temperature and relative humidity. Therefore, it is necessary to reverse the flow of the refrigerant to provide hot gas in the outdoor coil to melt the frost accumulation. This is accomplished by reversing the heat pump to the cooling cycle. At the same time, the outdoor fan stops to hasten the temperature rise of the outdoor coil and lessen the time required for defrosting. The indoor blower continues to run and the supplementary heaters are energized.

Defrost Control

Note: DSH models have one stage of mechanical heating. The defrost accumulation period will start when either first or second stage defrost thermostat closes. Defrost termination occurs when both thermostats open or the 10 minute cycle has completed.

During operation the power to the circuit board is controlled by a temperature sensor, which is clamped to a feeder tube entering the outdoor coil. Defrost timing periods of 30, 60 and 90 minutes may be selected by connecting the circuit board jumper to 30, 60 and 90 respectively. Accumulation of time for the timing period selected starts when the sensor closes (approximately 31° F), and when the wall thermostat calls for heat. At the end of the timing period, the unit's defrost cycle will be initiated provided the sensor remains closed. When the sensor opens (approximately 75° F), the defrost cycle is terminated and the timing period is reset. If the defrost cycle is not terminated due to the sensor temperature, a ten minute override interrupts the unit's defrost period.

RDS Function

The mitigation system is a stationary device that detects the presence of R-32 refrigerant above 25% LFL using refrigerant sensors and then initiates mitigation actions. The mitigation system's primary function is to reduce the concentration of leaked R-32 refrigerant to prevent serious safety hazards. The mitigation actions are accomplished by halting HVAC operation and continuing indoor blower operation to provide airflow. Once refrigerant concentration reaches below a safe threshold, the unit will remain in mitigation mode for five minutes to evacuate any remaining R-32 refrigerant within the unit. Upon completion, the unit will resume its normal operation.

RDS Operation

The mitigation system is controlled by a refrigerant sensor(s), which is secured to a designated location(s) for active monitoring. If a leak is detected, HVAC operation is disabled and the indoor blower fan is activated, providing airflow at or above minimum required airflow to evacuate excess concentration. If a Zone Control system is installed in the ductwork attached to this system, the Zone controller must be powered through a Daikin Zoning/Accessory PCB to ensure that the Zoning Dampers open during mitigation mode to provide ventilation throughout all ducting. If the unit is installed with a communicating thermostat, the thermostat will display relevant alerts/information concerning mitigation mode. Once sensors read concentration levels below a safe threshold, a five-minute timer will initiate. Once the time is over, the unit will resume back to its normal operation. If the sensors detect another concentration excess, the unit will go back into mitigation mode and will repeat the same process.

MAINTENANCE

WARNING

ELECTRICAL SHOCK, FIRE OR EXPLOSION HAZARD

Failure to follow safety warnings exactly could result in dangerous operation, serious injury, death or property damage.

Improper servicing could result in dangerous operation, serious injury, death or property damage.

- **Before servicing, disconnect all electrical power to unit.**
- **When servicing controls, label all wires prior to disconnecting. Reconnect wires correctly.**
- **Verify proper operation after servicing.**

WARNING

HIGH VOLTAGE!

Disconnect all power before servicing or installing this unit. Multiple power sources may be present. Failure to do so may cause property damage, personal injury or death.

WARNING

To prevent personal injury or death due to improper installation, adjustment, alteration, service, repair or maintenance, refer to this manual. For additional assistance or information, consult a qualified installer, servicer agency or the gas supplier.

CAUTION

SHEET METAL PARTS, SCREWS, CLIPS AND SIMILAR ITEMS INHERENTLY HAVE SHARP EDGES, AND IT IS NECESSARY THAT THE INSTALLER AND SERVICE PERSONNEL EXERCISE CAUTION.

Preventive maintenance is the best way to avoid unnecessary expense and inconvenience. Have this system inspected at regular intervals by qualified service personnel, at least twice a year. Routine maintenance should cover the following items:

1. Check and tighten all screws, and wire connections as needed.
2. Clean evaporator and condenser coils mechanically or with cold water, if necessary. Usually any fouling is only matted on the entering air face of the coil and can be removed by brushing.
3. Replace filters as needed (see Filters section).
4. Check for blockage of condensate drain.
5. Check power and control voltages.
6. Check running amperage.
7. Check operating temperatures and pressures.
8. Check and adjust temperature and pressure controls.
9. Check and adjust damper linkages.
10. Check operation of all safety controls.
11. Check condenser fans and tighten set screws.

Filters

CAUTION

TO PREVENT PROPERTY DAMAGE DUE TO FIRE AND LOSS OF EQUIPMENT EFFICIENCY OR EQUIPMENT DAMAGE DUE TO DUST AND LINT BUILD UP ON INTERNAL PARTS, NEVER OPERATE UNIT WITHOUT AN AIR FILTER INSTALLED IN THE RETURN AIR SYSTEM.

Every application may require a different frequency of replacement of dirty filters. Filters must be replaced at least every three (3) months during operating seasons.

Dirty filters are the most common cause of inadequate heating or cooling performance. Filter inspection should be made at least every two months; more often if necessary because of local conditions and usage.
Dirty throwaway filters should be discarded and replaced with a new, clean filter.

Disposable return air filters are supplied with this unit. See the unit Specification Sheet or Technical Manual for the correct size and part number. To remove the filters, remove the filter access panel on return side of the unit.

Cabinet Finish Maintenance

Use a fine grade automotive wax on the cabinet finish to maintain the finish's original high luster. This is especially important in installations with extended periods of direct sunlight.

Clean Outside Coil (Qualified Servicer Only)

The coil with the outside air flowing over it should be inspected annually and cleaned as frequently as necessary to keep the finned areas free of lint, hair and debris. Clean coil from inside out.

Clean Indoor Coil (Qualified Servicer Only)

Before cleaning the indoor coil, A2L sensor must be removed from the unit to avoid damage and contamination. Air filters should also be removed before performing maintenance. The coil with the filtered air flowing over it should be inspected and cleaned as frequently as necessary to keep the finned areas free of debris. Any air blowing or water rinsing should be performed from inside-out (opposite operating airflow direction) to prevent damage to the tube, fin coil and any other components.

Recovery

When removing refrigerant from a system, either for servicing or decommissioning, it is recommended good practice that all refrigerants are removed safely.

When transferring refrigerant into cylinders, ensure that only appropriate refrigerant recovery cylinders are employed. Ensure that the correct number of cylinders for holding the total system charge is available. All cylinders to be used are designated for the recovered refrigerant and labelled for that refrigerant (i.e. special cylinders for the recovery of refrigerant). Cylinders shall be complete with pressure-relief valve and associated shut-off valves in good working order. Empty recovery cylinders are evacuated and, if possible, cooled before recovery occurs.

The recovery equipment shall be in good working order with a set of instructions concerning the equipment that is at hand and shall be suitable for the recovery of the flammable refrigerant. If in doubt, the manufacturer should be consulted. In addition, a set of calibrated weighing scales shall be available and in good working order. Hoses shall be complete with leak-free disconnect couplings and in good condition.

The recovered refrigerant shall be processed according to local legislation in the correct recovery cylinder, and the relevant waste transfer note arranged. Do not mix refrigerants in recovery units and especially not in cylinders.

If compressors or compressor oils are to be removed, ensure that they have been evacuated to an acceptable level to make certain that flammable refrigerant does not remain within the lubricant. The compressor body shall not be heated by an open flame or other ignition sources to accelerate this process. When oil is drained from a system, it shall be carried out safely.

Charging Procedures

In addition to conventional charging procedures, the following requirements shall be followed.

- Ensure that contamination of different refrigerants does not occur when using charging equipment.
- Hoses or lines shall be as short as possible to minimise the amount of refrigerant contained in them.
- Cylinders shall be kept in an appropriate position according to the instructions.
- Ensure that the REFRIGERATING SYSTEM is grounded prior to charging the system with refrigerant.
- Label the system when charging is complete (if not already).
- Extreme care shall be taken not to overfill the REFRIGERATING SYSTEM.

NOTE: Grounding is defined as achieving an earth ground by connecting the equipment supplied grounding lug to the earth. This should be verified by a certified Technician.

Prior to recharging the system, it shall be pressure-tested with the appropriate purging gas. The system shall be leak-tested on completion of charging but prior to commissioning. A follow up leak test shall be carried out prior to leaving the site

IMPORTANT: REFER TO THE STANDING PRESSURE TEST/LEAK DETECTION METHOD REFERENCED LATER IN THIS MANUAL

The coil with the outside air flowing over it should be inspected annually and cleaned as frequently as necessary to keep the finned areas free of lint, hair and debris. Clean coil from inside out.

Lubrication

The fan shaft bearings, the supply fan motors, the condenser fan motors and compressors are permanently lubricated.

Functional Parts

Refer to the unit Parts Catalog for a list of functional parts. Parts are available from your distributor.

TROUBLESHOOTING

THE FOLLOWING INFORMATION IS FOR USE BY QUALIFIED SERVICE AGENCY ONLY: OTHERS SHOULD NOT ATTEMPT TO SERVICE THIS EQUIPMENT.

Common Causes of Unsatisfactory Operation of Heat Pump on the Heating Cycle.

Inadequate Air Volume Through Indoor Coil

When a heat pump is in the heating cycle, the indoor coil is functioning as a condenser. The return air filter must always be clean, and sufficient air volume must pass through the indoor coil to prevent excessive discharge pressure, and high pressure cut out.

Outside Air into Return Duct

Do not introduce cold outside air into the return duct of a heat pump installation. For units with 2-speed motors, do not allow air entering the indoor coil to drop below 65°F. Air below this temperature will cause low discharge pressure, thus low suction pressure, and excessive defrost cycling resulting in low heating output. It may also cause false defrosting.

Undercharge

An undercharged heat pump on the heating cycle will cause low discharge pressure resulting in low suction pressure and frost accumulation on the outdoor coil.

Poor "Terminating" Sensor contact

The unit's defrost terminating sensor must make good thermal contact with the outdoor coil tubing. Poor contact may not terminate the unit's defrost cycle quickly enough to prevent the unit from cutting out on high discharge pressure.

Malfunctioning Reversing Valve - This may be due to:

1. **Solenoid not energized** - In order to determine if the solenoid is energized, touch the nut that holds the solenoid cover in place with a screwdriver. If the nut magnetically holds the screwdriver, the solenoid is energized and the unit is in the cooling cycle.
2. **No voltage at unit's solenoid** - Check unit voltage. If no voltage, check wiring circuit.
3. **Valve will not shift:**
   a. **Undercharged** - check for leaks;
   b. **Valve Body Damaged** - Replace valve;
   c. **Unit Properly Charged** - If it is on the heating cycle, raise the discharge pressure by restricting airflow through the indoor coil. If the valve does not shift, tap it lightly on both ends with a screwdriver handle. DO NOT TAP THE VALVE BODY. If the unit is on the cooling cycle, raise the discharge pressure by restricting airflow through the outdoor coil. If the valve does not shift after the above attempts, cut the unit off and wait until the discharge and suction pressure equalize, and repeat above steps. If the valve does not shift, replace it.

Servicing measures for the REFRIGERANT DETECTION SYSTEM:

Before servicing, identify the mode of operation of the system by reading the LED flashing pattern on the PCB within the control box and matching the LED flashing pattern with mode of operation in the REFRIGERANT DETECTION SYSTEM TROUBLESHOOTING GUIDE on the wiring diagram which is attached on the back side of the control box panel (RDS PCB Fault Code Table). After identifying the mode of operation, take recommended actions as specified in the Recommended Actions for PCB LED Flashing Codes Table.

REFRIGERANT SENSORS FOR REFRIGERANT DETECTION SYSTEMS SHALL ONLY BE REPLACED WITH SENSORS SPECIFIED BY THE MANUFACTURER. IF THE REFRIGERANT SENSOR REQUIRES REPLACEMENT, PLEASE REPLACE WITH SENSATA R32 SENSOR PN#RGD-00ML12 (DAIKIN PN#SER2A08012).

LED STATUS	
MODE	**LED FLASHING PATTERN**
NORMAL OPERATION	SLOW LED FLASHING PATTERN (2 SECONDS ON 2 SECONDS OFF)
R-32 LEAK ALARM	FAST LED FLASHING PATTERN
DELAY MODE	LED WILL BE ON CONTINUOUSLY
SYSTEM VERIFICATION MODE	FAST LED FLASHING PATTERN
CONTROL BOARD INTERNAL FAULT	LED WILL FLASH 2 TIMES AND THEN BE OFF FOR 5 SECONDS
R32 SENSOR COMMUNICATION FAULT	LED WILL FLASH 3 TIMES AND THEN BE OFF FOR 5 SECONDS
R32 SENSOR FAULT	LED WILL FLASH 4 TIMES AND THEN BE OFF FOR 5 SECONDS

RDS PCB FAULT CODE TABLE

THE FOLLOWING INSTRUCTIONS ARE MANDATORY FOR A2LSYSTEMS AND SUPERSEDE OTHER INSTRUCTIONS

WARNING

ONLY BRAZING TECHNIQUES OR APPROVED MECHANICAL JOINTS SHOULD BE USED TO CONNECT REFRIGERANT TUBING CONNECTIONS. NON-APPROVED MECHANICAL CONNECTORS AND OTHER METHODS ARE NOT PERMITTED IN THIS SYSTEM CONTAINING A2L REFRIGERANT. APPROVED MECHANICAL JOINTS WILL BE DETAILED IN THE PRODUCT'S SPECIFICATION SHEETS.

STANDING PRESSURE TEST/LEAK DETECTION METHOD

Using dry nitrogen or dry helium, pressurize the system to 450 PSIG. allow the pressure to stabilize and hold for 15 minutes (minimum). The system is considered leak-free if the pressure does not drop below 450 PSIG. If, after 15 minutes, the pressure drops below 450 PSIG, it implies a leak in the system. Proceed with identifying and sealing the leak and repeating the Standing Pressure Test. Leak test the system using dry nitrogen or dry helium and soapy water to identify leaks. **No refrigerant shall be used for pressure testing to detect leaks**. Proceed to system evacuation using the Deep Vacuum Method.

DEEP VACUUM METHOD

The Deep Vacuum Method requires a vacuum pump rated for 500 microns or less. This method effectively and efficiently ensures the system is free of non-condensable air and moisture. The Triple Evacuation Method is detailed in the Service Manual for this product model as an alternative. To expedite the evacuation procedure, it is recommended that the Schrader Cores be removed from the service valves using a core-removal tool.

1. Connect the vacuum pump, micron gauge, and vacuum-rated hoses to both service valves. Evacuation must use both service valves to eliminate system mechanical seals.
2. Evacuate the system to less than 500 microns.
3. Isolate the pump from the system and hold the vacuum for 10 minutes (minimum). Typically, pressure will rise slowly during this period. If the pressure rises to less than 1000 microns and remains steady, the system is considered leak-free; proceed to system charging and startup.
4. If pressure rises above 1000 microns but holds steady below 2000 microns, non-condensable air or moisture may remain, or a small leak may be present. Return to step 2: If the same result is achieved, check for leaks and repair. Repeat the evacuation procedure.
5. If pressure rises above 2000 microns, a leak is present. Check for leaks and repair them. Then, repeat the evacuation procedure.

ACCESSORY INSTALLATION

WARNING

ALL ACCESSORIES THAT MAY BECOME A POTENTIAL IGNITION SOURCE IF INSTALLED. SUCH AS ELECTRONIC AIR CLEANERS, MUST ONLY BE POWERED THROUGH OUR ACCESSORY CONTROL BOARD KIT. IF AN ELECTRONIC AIR CLEANER IS ALREADY INSTALLED IN THE DUCT WORK AND NOT CONNECTED TO THE ACCESSORY CONTROL BOARD. IT WILL HAVE TO BE DISABLED OR REMOVED. ENSURE THAT ANY ADDITIONAL WIRING FROM THE INDOOR UNIT TO THE ACCESSORY CONTROL BOARD IS ROUTED AND PROTECTED FROM DAMAGE WEAR, AVOIDING THE FLUE PIPE AND ANY JOINTS THAT MAY NEED BRAZED OR DISCONNECTED FOR SERVICE. REFER TO THE PRODUCT SPECIFICATION SHEET FOR THE ACCESSORY CONTROL BOARD KIT PART NUMBER.

ALTITUDE ADJUSTMENT FACTOR TO CALCULATE MINIMUM ROOM AREA

The Indoor equipment mitigation requirements are calculated at sea level. For higher altitudes adjust the minimum room area specified on or near the Serial Plate by the corresponding altitude adjustment factor shown below. This table is provided as a reference.

Adjusted room area ($A_{min\ adj}$) is the product of the minimum room area specified in the serial plate and the adjustment factor AF, as shown in below formula

$A_{min\ adj} = A_{min}$ (serial plate) * AF

Height in meters	Height in feet	Altitude Adjustment Factor (AF)
At sea level	At sea level	1.00
1~200	1~660	1.02
200~400	660~1320	1.03
400~600	1320~1970	1.07
600~800	1970~2630	1.05
800~1000	2630~3290	1.09
1000~1200	3290~3940	1.11
1200~1400	3940~4600	1.13
1400~1600	4600~5250	1.15
1600~1800	5250~5910	1.17
1800~2000	5910~6570	1.19
2000~2200	6570~7220	1.21
2200~2400	7220~7880	1.26
2400~2600	7880~8540	1.24
2600~2800	8540~9190	1.29
2800~3000	9190~9850	1.31
3000~3200	9850~10500	1.34

DSH OPERATIONS								WIRE RANGE									
HEAT PUMP	G	Y1	Y2	W1	W2	O	DH	T1	T2	T3	T4	T5	T6	T7	T8	T9	T10
Fan Only	X							GR									
Cooling Mode LO	X	X				X		●—YL→									
Cooling Mode HI	X	X	X			X				●—	PU→						
Mech. Heating Mode LO	X	X						●—YL→									
Mech. Heating Mode HI	X	X	X							●—	PU→						
Elec. Heating Mode LO	X			X			X						●—WH→				
Elec. Heating Mode HI	X			X	X		X								●—	BR→	
Mech. Plus Elec. Heat W1	X	X	X	X			X								●—	PU→	
Mech. Plus Elec. Heat W2	X	X	X	X	X		X								●—	BR→	
Defrost ("O" from board)	X	X	X	X			X								●—	PU→	

DSC OPERATIONS							WIRE RANGE									
AC	G	Y1	Y2	W1	W2	DH	T1	T2	T3	T4	T5	T6	T7	T8	T9	T10
Fan Only	X						GR									
Cooling Mode LO	X	X					●—YL→									
Cooling Mode HI	X	X	X						●—	PU→						
Heating Mode LO	X			X		X						●—WH→				
Heating Mode HI	X			X	X	X								●—	BR→	

X = 24V signal

●——→ = Range of AVAILABLE TAPS

For wire color information and placement, view DFC/DFH Model Wiring PG 13.

APPENDIX A BLOWER PERFORMANCE DATA
7.5 TON AC

7.5T AC Standard Static

Motor 2.4 HP

Model: DSC090_STD

DOWNSHOT

	TAP SPEED	ESP	SCFM	R.P.M.	WATTS	BHP
PL Rated	TAP 1	0.2	1927.5	436.1	136.1	0.20
		0.4	1749.5	518.0	169.5	0.24
		0.6	1578.5	597.8	197.8	0.28
		0.8				

	TAP SPEED	ESP	SCFM	R.P.M.	WATTS	BHP
PL Max CFM	TAP 2	0.2	2169.7	465.2	192.7	0.28
		0.4	2001.8	541.5	226.1	0.33
		0.6	1841.3	616.2	256.0	0.38
		0.8	1571.8	705.6	296.9	0.43

	TAP SPEED	ESP	SCFM	R.P.M.	WATTS	BHP
Rated	TAP 3	0.2	3114.2	580.0	458.3	0.71
		0.4	2981.4	636.3	493.7	0.78
		0.6	2856.8	692.9	530.1	0.85
		0.8	2705.0	752.3	574.2	0.92

	TAP SPEED	ESP	SCFM	R.P.M.	WATTS	BHP
400 CFM/Ton @ 0.6 ESP	TAP 4	0.2	3244.3	596.0	502.2	0.79
		0.4	3115.7	649.9	538.0	0.86
		0.6	2995.3	704.2	575.4	0.93
		0.8	2856.7	760.1	620.1	1.00

	TAP SPEED	ESP	SCFM	R.P.M.	WATTS	BHP
400 CFM/Ton @ 0.8 ESP	TAP 5	0.2	3370.4	611.6	546.8	0.87
		0.4	3245.7	663.3	583.3	0.94
		0.6	3129.1	715.5	621.5	1.01
		0.8	3002.4	768.1	666.9	1.09

	TAP SPEED	ESP	SCFM	R.P.M.	WATTS	BHP
320 CFM/Ton	TAP 6	0.2	2841.8	546.6	373.0	0.57
		0.4	2699.6	608.3	407.5	0.63
		0.6	2565.7	669.8	441.9	0.69
		0.8	2383.5	737.1	485.0	0.76

	TAP SPEED	ESP	SCFM	R.P.M.	WATTS	BHP
350 CFM/Ton	TAP 7	0.2	3047.6	571.8	436.7	0.59
		0.4	2912.6	629.4	471.8	0.65
		0.6	2785.8	687.2	507.7	0.71
		0.8	2626.9	748.4	551.6	0.78

	TAP SPEED	ESP	SCFM	R.P.M.	WATTS	BHP
370 CFM/Ton	TAP 8	0.2	3179.8	588.0	480.2	0.75
		0.4	3049.1	643.2	515.7	0.82
		0.6	2926.7	698.6	552.6	0.89
		0.8	2781.6	756.2	597.0	0.96

	TAP SPEED	ESP	SCFM	R.P.M.	WATTS	BHP
400 CFM/Ton @ 0.6 ESP	TAP 9	0.2	3244.3	596.0	502.2	0.79
		0.4	3115.7	649.9	538.0	0.86
		0.6	2995.3	704.2	575.4	0.93
		0.8	2856.7	760.1	620.1	1.00

	TAP SPEED	ESP	SCFM	R.P.M.	WATTS	BHP
400 CFM/Ton @ 0.8 ESP	TAP 10	0.2	3370.4	611.6	546.8	0.87
		0.4	3245.7	663.3	583.3	0.94
		0.6	3129.1	715.5	621.5	1.01
		0.8	3002.4	768.1	666.9	1.09

HORIZONTAL

	TAP SPEED	ESP	SCFM	R.P.M.	WATTS	BHP
PL Rated	TAP 1	0.2	1951.6	453.2	143.7	0.21
		0.4	1843.9	526.3	161.4	0.25
		0.6	1670.7	607.2	199.9	0.28
		0.8				

	TAP SPEED	ESP	SCFM	R.P.M.	WATTS	BHP
PL Max CFM	TAP 2	0.2	2182.2	486.4	204.2	0.30
		0.4	2073.8	554.4	224.4	0.34
		0.6	1915.1	628.8	261.1	0.38
		0.8	1621.3	715.7	288.4	0.44

	TAP SPEED	ESP	SCFM	R.P.M.	WATTS	BHP
Rated	TAP 3	0.2	3084.0	616.8	489.3	0.76
		0.4	2977.1	666.9	519.8	0.82
		0.6	2869.1	718.6	552.5	0.88
		0.8	2736.7	773.4	598.8	0.95

	TAP SPEED	ESP	SCFM	R.P.M.	WATTS	BHP
400 CFM/Ton @ 0.6 ESP	TAP 4	0.2	3208.7	634.9	536.5	0.84
		0.4	3102.6	682.8	568.5	0.90
		0.6	3000.7	731.9	601.1	0.97
		0.8	2886.0	783.0	649.4	1.04

	TAP SPEED	ESP	SCFM	R.P.M.	WATTS	BHP
400 CFM/Ton @ 0.8 ESP	TAP 5	0.2	3329.7	652.4	584.6	0.92
		0.4	3224.6	698.4	618.1	0.99
		0.6	3128.3	745.0	650.7	1.06
		0.8	3029.3	792.7	700.8	1.12

	TAP SPEED	ESP	SCFM	R.P.M.	WATTS	BHP
320 CFM/Ton	TAP 6	0.2	2823.4	579.0	397.6	0.60
		0.4	2715.2	633.9	425.0	0.66
		0.6	2593.7	691.6	458.2	0.72
		0.8	2420.3	754.9	499.9	0.78

	TAP SPEED	ESP	SCFM	R.P.M.	WATTS	BHP
350 CFM/Ton	TAP 7	0.2	3020.2	607.5	466.0	0.63
		0.4	2912.9	658.8	495.8	0.68
		0.6	2801.8	711.9	528.5	0.74
		0.8	2659.8	768.7	573.8	0.80

	TAP SPEED	ESP	SCFM	R.P.M.	WATTS	BHP
370 CFM/Ton	TAP 8	0.2	3146.8	625.9	512.8	0.80
		0.4	3040.3	674.9	544.1	0.86
		0.6	2935.4	725.3	576.6	0.92
		0.8	2812.1	778.2	624.0	0.99

	TAP SPEED	ESP	SCFM	R.P.M.	WATTS	BHP
400 CFM/Ton @ 0.6 ESP	TAP 9	0.2	3208.7	634.9	536.5	0.84
		0.4	3102.6	682.8	568.5	0.90
		0.6	3000.7	731.9	601.1	0.97
		0.8	2886.0	783.0	649.4	1.04

	TAP SPEED	ESP	SCFM	R.P.M.	WATTS	BHP
400 CFM/Ton @ 0.8 ESP	TAP 10	0.2	3329.7	652.4	584.6	0.92
		0.4	3224.6	698.4	618.1	0.99
		0.6	3128.3	745.0	650.7	1.06
		0.8	3029.3	792.7	700.8	1.12

APPENDIX A BLOWER PERFORMANCE DATA
7.5 TON AC

7.5T AC Medium Static

Motor 2.4 HP

Model: DSC090_MED

DOWNSHOT

	TAP SPEED	ESP	SCFM	R.P.M.	WATTS	BHP
PL Rated	TAP 1	0.2	2090.0	455.6	173.6	0.26
		0.4	1918.8	533.7	207.0	0.30
		0.6	1754.9	610.1	236.3	0.34
		0.8				
		1				
		1.2				
		1.4				

	TAP SPEED	ESP	SCFM	R.P.M.	WATTS	BHP
PL CFM Max	TAP 2	0.2	2699.6	529.3	331.6	0.50
		0.4	2552.1	593.9	365.7	0.56
		0.6	2413.0	658.1	399.1	0.62
		0.8	2213.7	729.8	441.7	0.69
		1	2022.3	791.8	473.1	0.75
		1.2	1865.2	845.4	505.8	0.80
		1.4	1727.0	879.7	520.3	0.83

	TAP SPEED	ESP	SCFM	R.P.M.	WATTS	BHP
Rated @ 0.8 ESP	TAP 3	0.2	3370.4	611.6	546.8	0.87
		0.4	3245.7	663.3	583.3	0.94
		0.6	3129.1	715.5	621.5	1.01
		0.8	3002.4	768.1	666.9	1.09
		1	2864.0	822.0	711.4	1.16
		1.2	2732.9	872.3	755.4	1.24
		1.4	2612.3	915.1	790.3	1.30

	TAP SPEED	ESP	SCFM	R.P.M.	WATTS	BHP
400 CFM/Ton @ 1.2 ESP	TAP 4	0.2	3551.9	634.1	615.3	0.99
		0.4	3432.6	682.8	652.7	1.06
		0.6	3320.8	732.1	692.4	1.14
		0.8	3209.7	780.5	738.7	1.22
		1	3083.3	832.2	786.0	1.30
		1.2	2958.7	881.4	832.8	1.37
		1.4	2842.8	925.7	872.3	1.44

	TAP SPEED	ESP	SCFM	R.P.M.	WATTS	BHP
400 CFM/Ton	TAP 5	0.2	3667.8	648.7	661.9	1.07
		0.4	3551.7	695.5	700.1	1.15
		0.6	3442.8	743.0	740.7	1.23
		0.8	3340.3	789.0	787.6	1.30
		1	3220.9	839.3	836.5	1.39
		1.2	3100.5	887.8	885.0	1.47
		1.4	2987.3	932.7	927.2	1.54

	TAP SPEED	ESP	SCFM	R.P.M.	WATTS	BHP
320 CFM/Ton	TAP 6	0.2	3212.2	592.0	491.2	0.77
		0.4	3082.5	646.6	526.9	0.84
		0.6	2961.1	701.4	564.0	0.91
		0.8	2819.4	758.2	608.6	0.98
		1	2669.6	813.9	650.4	1.06
		1.2	2532.5	865.1	691.8	1.12
		1.4	2407.9	906.3	722.3	1.18

	TAP SPEED	ESP	SCFM	R.P.M.	WATTS	BHP
350 CFM/Ton	TAP 7	0.2	3370.4	611.6	546.8	0.87
		0.4	3245.7	663.3	583.3	0.94
		0.6	3129.1	715.5	621.5	1.01
		0.8	3002.4	768.1	666.9	1.09
		1	2864.0	822.0	711.4	1.16
		1.2	2732.9	872.3	755.4	1.24
		1.4	2612.3	915.1	790.3	1.30

	TAP SPEED	ESP	SCFM	R.P.M.	WATTS	BHP
370 CFM/Ton	TAP 8	0.2	3492.4	626.7	592.3	0.95
		0.4	3371.4	676.4	629.4	1.02
		0.6	3258.1	726.6	668.6	1.10
		0.8	3142.1	776.3	714.5	1.17
		1	3011.9	828.7	761.0	1.25
		1.2	2885.2	878.4	806.9	1.33
		1.4	2767.8	922.2	844.9	1.39

	TAP SPEED	ESP	SCFM	R.P.M.	WATTS	BHP
400 CFM/Ton @ 1.2 ESP	TAP 9	0.2	3551.9	634.1	615.3	0.99
		0.4	3432.6	682.8	652.7	1.06
		0.6	3320.8	732.1	692.4	1.14
		0.8	3209.7	780.5	738.7	1.22
		1	3083.3	832.2	786.0	1.30
		1.2	2958.7	881.4	832.8	1.37
		1.4	2842.8	925.7	872.3	1.44

	TAP SPEED	ESP	SCFM	R.P.M.	WATTS	BHP
400 CFM/Ton	TAP 10	0.2	3667.8	648.7	661.9	1.07
		0.4	3551.7	695.5	700.1	1.15
		0.6	3442.8	743.0	740.7	1.23
		0.8	3340.3	789.0	787.6	1.30
		1	3220.9	839.3	836.5	1.39
		1.2	3100.5	887.8	885.0	1.47
		1.4	2987.3	932.7	927.2	1.54

HORIZONTAL

	TAP SPEED	ESP	SCFM	R.P.M.	WATTS	BHP
PL Rated	TAP 1	0.2	2106.3	475.5	183.8	0.27
		0.4	1998.1	545.1	203.1	0.31
		0.6	1834.6	621.6	240.4	0.35
		0.8	1525.1	711.6	265.9	0.40
		1				
		1.2				
		1.4				

	TAP SPEED	ESP	SCFM	R.P.M.	WATTS	BHP
PL CFM Max	TAP 2	0.2	2687.4	559.3	353.0	0.53
		0.4	2578.9	616.9	378.9	0.58
		0.6	2450.0	677.9	412.6	0.64
		0.8	2253.2	745.8	451.6	0.70
		1	2090.7	807.3	486.6	0.76
		1.2	1951.3	857.1	511.0	0.81
		1.4	1756.8	915.8	547.0	0.86

	TAP SPEED	ESP	SCFM	R.P.M.	WATTS	BHP
Rated @ 0.8 ESP	TAP 3	0.2	3329.7	652.4	584.6	0.92
		0.4	3224.6	698.4	618.1	0.99
		0.6	3128.3	745.0	650.7	1.06
		0.8	3029.3	792.7	700.8	1.12
		1	2910.5	844.4	742.5	1.20
		1.2	2802.7	890.8	771.6	1.26
		1.4	2620.9	952.2	821.0	1.35

	TAP SPEED	ESP	SCFM	R.P.M.	WATTS	BHP
400 CFM/Ton @ 1.2 ESP	TAP 4	0.2	3504.1	677.8	658.4	1.06
		0.4	3400.9	721.1	694.1	1.12
		0.6	3312.2	764.4	727.1	1.19
		0.8	3233.1	807.6	779.3	1.26
		1	3124.7	856.7	822.3	1.34
		1.2	3023.9	901.9	852.8	1.41
		1.4	2849.3	962.7	905.4	1.50

	TAP SPEED	ESP	SCFM	R.P.M.	WATTS	BHP
400 CFM/Ton	TAP 5	0.2	3615.8	694.1	708.8	1.15
		0.4	3514.0	735.8	745.8	1.22
		0.6	3429.7	777.2	779.3	1.29
		0.8	3361.5	817.8	832.6	1.35
		1	3259.4	865.2	876.3	1.43
		1.2	3162.6	909.6	907.7	1.50
		1.4	2993.7	969.7	962.2	1.60

	TAP SPEED	ESP	SCFM	R.P.M.	WATTS	BHP
320 CFM/Ton	TAP 6	0.2	3177.9	630.4	524.6	0.82
		0.4	3071.6	678.9	556.3	0.88
		0.6	2968.2	728.6	588.8	0.95
		0.8	2849.2	780.6	636.7	1.01
		1	2720.8	834.6	677.1	1.08
		1.2	2606.3	881.9	705.0	1.14
		1.4	2419.7	943.3	751.5	1.22

	TAP SPEED	ESP	SCFM	R.P.M.	WATTS	BHP
350 CFM/Ton	TAP 7	0.2	3329.7	652.4	584.6	0.92
		0.4	3224.6	698.4	618.1	0.99
		0.6	3128.3	745.0	650.7	1.06
		0.8	3029.3	792.7	700.8	1.12
		1	2910.5	844.4	742.5	1.20
		1.2	2802.7	890.8	771.6	1.26
		1.4	2620.9	952.2	821.0	1.35

	TAP SPEED	ESP	SCFM	R.P.M.	WATTS	BHP
370 CFM/Ton	TAP 8	0.2	3446.9	669.5	633.6	1.01
		0.4	3343.0	713.6	668.5	1.08
		0.6	3251.9	758.0	701.4	1.15
		0.8	3166.6	802.6	753.0	1.21
		1	3055.0	852.5	795.6	1.29
		1.2	2951.9	898.1	825.6	1.36
		1.4	2774.8	959.2	877.1	1.45

	TAP SPEED	ESP	SCFM	R.P.M.	WATTS	BHP
400 CFM/Ton @ 1.2 ESP	TAP 9	0.2	3504.1	677.8	658.4	1.06
		0.4	3400.9	721.1	694.1	1.12
		0.6	3312.2	764.4	727.1	1.19
		0.8	3233.1	807.6	779.3	1.26
		1	3124.7	856.7	822.3	1.34
		1.2	3023.9	901.9	852.8	1.41
		1.4	2849.3	962.7	905.4	1.50

	TAP SPEED	ESP	SCFM	R.P.M.	WATTS	BHP
400 CFM/Ton	TAP 10	0.2	3615.8	694.1	708.8	1.15
		0.4	3514.0	735.8	745.8	1.22
		0.6	3429.7	777.2	779.3	1.29
		0.8	3361.5	817.8	832.6	1.35
		1	3259.4	865.2	876.3	1.43
		1.2	3162.6	909.6	907.7	1.50
		1.4	2993.7	969.7	962.2	1.60

APPENDIX A BLOWER PERFORMANCE DATA

7.5 TON AC

7.5T AC High Static | Motor 2.4 HP | Model: DSC090_HIGH

DOWNSHOT

	TAP SPEED	ESP	SCFM	R.P.M.	WATTS	BHP
PL Rated	TAP 1	0.2	2402.9	493.3	251.0	0.37
		0.4	2244.2	564.3	284.6	0.42
		0.6	2093.4	634.4	316.1	0.48
		0.8	1855.9	715.7	357.6	0.54
		1	1637.8	781.2	382.2	0.59
		1.2				
		1.4				
		1.6				
		1.8				

	TAP SPEED	ESP	SCFM	R.P.M.	WATTS	BHP
PL Max CFM	TAP 2	0.2	2553.2	511.5	290.9	0.43
		0.4	2400.3	579.3	324.7	0.49
		0.6	2255.6	646.3	357.2	0.55
		0.8	2037.8	722.7	399.2	0.61
		1	1833.5	786.4	427.3	0.67
		1.2				
		1.4				
		1.6				
		1.8				

	TAP SPEED	ESP	SCFM	R.P.M.	WATTS	BHP
Rated	TAP 3	0.2	3551.9	634.1	615.3	0.99
		0.4	3432.6	682.8	652.7	1.06
		0.6	3320.8	732.1	692.4	1.14
		0.8	3209.7	780.5	738.7	1.22
		1	3083.3	832.2	786.0	1.30
		1.2	2958.7	881.4	832.8	1.37
		1.4	2842.8	925.7	872.3	1.44
		1.6	2620.1	989.9	926.6	1.54
		1.8	2488.5	1038.8	959.4	1.62

	TAP SPEED	ESP	SCFM	R.P.M.	WATTS	BHP
400 CFM/Ton @ 1.6	TAP 4	0.2	3779.7	662.7	709.4	1.16
		0.4	3666.4	708.0	748.3	1.24
		0.6	3560.0	753.8	789.8	1.32
		0.8	3464.9	797.6	837.4	1.39
		1	3351.7	846.6	887.7	1.48
		1.2	3235.1	894.3	937.8	1.56
		1.4	3124.7	939.8	982.3	1.64
		1.6	2913.7	992.3	1029.5	1.74
		1.8	2808.6	1041.8	1070.1	1.82

	TAP SPEED	ESP	SCFM	R.P.M.	WATTS	BHP
400 CFM/Ton	TAP 5	0.2	3861.0	673.0	745.4	1.22
		0.4	3749.6	717.2	785.0	1.31
		0.6	3644.7	761.8	827.2	1.39
		0.8	3554.3	804.2	875.4	1.46
		1	3445.4	852.2	926.5	1.55
		1.2	3331.5	899.3	977.6	1.64
		1.4	3223.0	945.1	1023.7	1.72
		1.6	3017.3	994.0	1069.0	1.81
		1.8	2920.1	1043.4	1112.2	1.90

	TAP SPEED	ESP	SCFM	R.P.M.	WATTS	BHP
320 CFM/Ton	TAP 6	0.2	3431.9	619.2	569.5	0.91
		0.4	3309.1	669.9	606.2	0.98
		0.6	3194.2	721.0	644.9	1.06
		0.8	3073.0	772.2	690.6	1.13
		1	2938.8	825.4	736.1	1.21
		1.2	2809.9	875.3	781.1	1.28
		1.4	2691.0	918.6	817.6	1.35
		1.6	2463.8	989.6	876.3	1.45
		1.8	2316.0	1038.1	904.6	1.52

	TAP SPEED	ESP	SCFM	R.P.M.	WATTS	BHP
350 CFM/Ton	TAP 7	0.2	3581.3	637.8	626.9	1.01
		0.4	3462.7	686.0	664.5	1.09
		0.6	3351.8	734.8	704.4	1.16
		0.8	3242.9	782.6	750.8	1.24
		1	3118.3	833.9	798.6	1.32
		1.2	2994.8	883.0	845.8	1.40
		1.4	2879.6	927.5	886.0	1.47
		1.6	2658.1	990.0	939.3	1.57
		1.8	2530.3	1039.1	973.1	1.64

	TAP SPEED	ESP	SCFM	R.P.M.	WATTS	BHP
370 CFM/Ton	TAP 8	0.2	3724.3	655.7	685.5	1.12
		0.4	3609.6	701.8	724.1	1.19
		0.6	3501.9	748.4	765.1	1.27
		0.8	3403.3	793.3	812.4	1.35
		1	3287.2	842.9	862.0	1.43
		1.2	3168.7	891.0	911.3	1.52
		1.4	3056.9	936.3	954.7	1.59
		1.6	2842.7	991.5	1003.5	1.69
		1.8	2731.7	1040.9	1042.3	1.77

	TAP SPEED	ESP	SCFM	R.P.M.	WATTS	BHP
400 CFM/Ton @ 1.6	TAP 9	0.2	3779.7	662.7	709.4	1.16
		0.4	3666.4	708.0	748.3	1.24
		0.6	3560.0	753.8	789.8	1.32
		0.8	3464.9	797.6	837.4	1.39
		1	3351.7	846.6	887.7	1.48
		1.2	3235.1	894.3	937.8	1.56
		1.4	3124.7	939.8	982.3	1.64
		1.6	2913.7	992.3	1029.5	1.74
		1.8	2808.6	1041.8	1070.1	1.82

	TAP SPEED	ESP	SCFM	R.P.M.	WATTS	BHP
400 CFM/Ton	TAP 10	0.2	3861.0	673.0	745.4	1.22
		0.4	3749.6	717.2	785.0	1.31
		0.6	3644.7	761.8	827.2	1.39
		0.8	3554.3	804.2	875.4	1.46
		1	3445.4	852.2	926.5	1.55
		1.2	3331.5	899.3	977.6	1.64
		1.4	3223.0	945.1	1023.7	1.72
		1.6	3017.3	994.0	1069.0	1.81
		1.8	2920.1	1043.4	1112.2	1.90

HORIZONTAL

	TAP SPEED	ESP	SCFM	R.P.M.	WATTS	BHP
PL Rated	TAP 1	0.2	2404.3	518.5	266.6	0.39
		0.4	2295.7	581.7	289.3	0.44
		0.6	2150.4	650.1	324.5	0.49
		0.8	1901.0	728.4	357.2	0.55
		1	1717.1	794.1	388.6	0.60
		1.2	1561.5	845.1	411.0	0.64
		1.4				
		1.6				
		1.8				

	TAP SPEED	ESP	SCFM	R.P.M.	WATTS	BHP
PL Max CFM	TAP 2	0.2	2547.7	539.2	309.4	0.46
		0.4	2439.1	599.5	333.7	0.51
		0.6	2302.2	664.1	368.1	0.56
		0.8	2080.1	737.0	404.0	0.62
		1	1907.1	800.5	437.3	0.68
		1.2	1759.9	851.0	460.7	0.72
		1.4				
		1.6				
		1.8				

	TAP SPEED	ESP	SCFM	R.P.M.	WATTS	BHP
Rated	TAP 3	0.2	3504.1	677.8	658.4	1.06
		0.4	3400.9	721.1	694.1	1.12
		0.6	3312.2	764.4	727.1	1.19
		0.8	3233.1	807.6	779.3	1.26
		1	3124.7	856.7	822.3	1.34
		1.2	3023.9	901.9	852.8	1.41
		1.4	2849.3	962.7	905.4	1.50
		1.6	2727.6	1009.2	948.7	1.57
		1.8	2574.8	1058.8	993.9	1.65

	TAP SPEED	ESP	SCFM	R.P.M.	WATTS	BHP
400 CFM/Ton @ 1.6	TAP 4	0.2	3723.7	709.9	760.0	1.24
		0.4	3623.4	750.1	798.4	1.31
		0.6	3543.2	789.8	832.4	1.38
		0.8	3484.0	828.2	886.7	1.45
		1	3387.6	873.9	931.0	1.53
		1.2	3294.3	917.4	963.3	1.60
		1.4	3131.8	976.5	1019.4	1.71
		1.6	3015.0	1022.5	1065.8	1.79
		1.8	2893.4	1063.4	1102.6	1.86

	TAP SPEED	ESP	SCFM	R.P.M.	WATTS	BHP
400 CFM/Ton	TAP 5	0.2	3802.1	721.3	799.0	1.31
		0.4	3703.2	760.6	838.5	1.38
		0.6	3625.6	799.2	873.0	1.45
		0.8	3571.9	836.0	927.7	1.52
		1	3479.4	880.6	972.3	1.60
		1.2	3388.4	923.5	1005.3	1.68
		1.4	3231.2	981.6	1062.6	1.79
		1.6	3116.5	1027.3	1110.0	1.87
		1.8	3004.5	1065.6	1144.2	1.94

	TAP SPEED	ESP	SCFM	R.P.M.	WATTS	BHP
320 CFM/Ton	TAP 6	0.2	3388.8	661.0	609.0	0.97
		0.4	3284.3	706.1	643.2	1.03
		0.6	3190.6	751.5	675.9	1.10
		0.8	3098.7	797.6	726.8	1.17
		1	2983.6	848.4	769.0	1.24
		1.2	2878.2	894.4	798.5	1.31
		1.4	2698.6	955.7	849.0	1.40
		1.6	2574.7	1002.2	890.5	1.47
		1.8	2403.4	1057.1	941.0	1.55

	TAP SPEED	ESP	SCFM	R.P.M.	WATTS	BHP
350 CFM/Ton	TAP 7	0.2	3532.4	682.0	670.9	1.08
		0.4	3429.5	724.8	706.9	1.15
		0.6	3341.9	767.6	740.0	1.22
		0.8	3265.7	810.1	792.6	1.28
		1	3159.0	858.8	835.8	1.36
		1.2	3059.2	903.8	866.5	1.43
		1.4	2886.0	964.5	919.5	1.53
		1.6	2764.9	1010.9	963.3	1.60
		1.8	2616.4	1059.3	1007.3	1.68

	TAP SPEED	ESP	SCFM	R.P.M.	WATTS	BHP
370 CFM/Ton	TAP 8	0.2	3670.2	702.1	734.3	1.19
		0.4	3569.2	743.0	772.0	1.26
		0.6	3486.9	783.5	805.7	1.33
		0.8	3423.5	823.0	859.5	1.40
		1	3324.3	869.5	903.6	1.48
		1.2	3229.3	913.5	935.4	1.55
		1.4	3063.6	973.1	990.7	1.66
		1.6	2945.5	1019.3	1036.5	1.73
		1.8	2816.7	1062.1	1075.1	1.81

	TAP SPEED	ESP	SCFM	R.P.M.	WATTS	BHP
400 CFM/Ton @ 1.6	TAP 9	0.2	3723.7	709.9	760.0	1.24
		0.4	3623.4	750.1	798.4	1.31
		0.6	3543.2	789.8	832.4	1.38
		0.8	3484.0	828.2	886.7	1.45
		1	3387.6	873.9	931.0	1.53
		1.2	3294.3	917.4	963.3	1.60
		1.4	3131.8	976.5	1019.4	1.71
		1.6	3015.0	1022.5	1065.8	1.79
		1.8	2893.4	1063.4	1102.6	1.86

	TAP SPEED	ESP	SCFM	R.P.M.	WATTS	BHP
400 CFM/Ton	TAP 10	0.2	3802.1	721.3	799.0	1.31
		0.4	3703.2	760.6	838.5	1.38
		0.6	3625.6	799.2	873.0	1.45
		0.8	3571.9	836.0	927.7	1.52
		1	3479.4	880.6	972.3	1.60
		1.2	3388.4	923.5	1005.3	1.68
		1.4	3231.2	981.6	1062.6	1.79
		1.6	3116.5	1027.3	1110.0	1.87
		1.8	3004.5	1065.6	1144.2	1.94

APPENDIX A BLOWER PERFORMANCE DATA

8.5 TON AC

8.5T AC Standard Static

Motor 2.4 HP

Model: DSC102_STD

DOWNSHOT

	TAP SPEED	ESP	SCFM	R.P.M.	WATTS	BHP
PL Rated	TAP 1	0.2	2090.0	455.6	173.6	0.26
		0.4	1918.8	533.7	207.0	0.30
		0.6	1754.9	610.1	236.3	0.34
		0.8				

	TAP SPEED	ESP	SCFM	R.P.M.	WATTS	BHP
PL Max CFM	TAP 2	0.2	2248.5	474.7	211.9	0.31
		0.4	2083.7	549.1	245.4	0.36
		0.6	1926.5	622.3	275.8	0.41
		0.8				

	TAP SPEED	ESP	SCFM	R.P.M.	WATTS	BHP
Rated	TAP 3	0.2	3295.2	602.3	520.0	0.82
		0.4	3168.3	655.3	556.0	0.89
		0.6	3049.4	708.7	593.7	0.96
		0.8	2915.7	763.3	638.7	1.04

	TAP SPEED	ESP	SCFM	R.P.M.	WATTS	BHP
400 CFM/Ton @ 0.6 ESP	TAP 4	0.2	3627.7	643.6	645.5	1.04
		0.4	3510.5	691.1	683.4	1.12
		0.6	3400.6	739.2	723.7	1.20
		0.8	3295.2	786.0	770.4	1.27

	TAP SPEED	ESP	SCFM	R.P.M.	WATTS	BHP
400 CFM/Ton @ 0.8 ESP	TAP 5	0.2	3724.3	655.7	685.5	1.12
		0.4	3609.6	701.8	724.1	1.19
		0.6	3501.9	748.4	765.1	1.27
		0.8	3403.3	793.3	812.4	1.35

	TAP SPEED	ESP	SCFM	R.P.M.	WATTS	BHP
320 CFM/Ton	TAP 6	0.2	3114.2	580.0	458.3	0.71
		0.4	2981.4	636.3	493.7	0.78
		0.6	2856.8	692.9	530.1	0.85
		0.8	2705.0	752.3	574.2	0.92

	TAP SPEED	ESP	SCFM	R.P.M.	WATTS	BHP
350 CFM/Ton	TAP 7	0.2	3320.5	605.4	528.9	0.74
		0.4	3194.3	658.0	565.1	0.81
		0.6	3076.1	711.0	603.0	0.87
		0.8	2944.9	764.9	648.1	0.94

	TAP SPEED	ESP	SCFM	R.P.M.	WATTS	BHP
370 CFM/Ton	TAP 8	0.2	3462.3	623.0	580.9	0.93
		0.4	3340.4	673.1	617.8	1.00
		0.6	3226.3	723.8	656.7	1.08
		0.8	3107.7	774.3	702.5	1.15

	TAP SPEED	ESP	SCFM	R.P.M.	WATTS	BHP
400 CFM/Ton @ 0.6 ESP	TAP 9	0.2	3627.7	643.6	645.5	1.04
		0.4	3510.5	691.1	683.4	1.12
		0.6	3400.6	739.2	723.7	1.20
		0.8	3295.2	786.0	770.4	1.27

	TAP SPEED	ESP	SCFM	R.P.M.	WATTS	BHP
400 CFM/Ton @ 0.8 ESP	TAP 10	0.2	3724.3	655.7	685.5	1.12
		0.4	3609.6	701.8	724.1	1.19
		0.6	3501.9	748.4	765.1	1.27
		0.8	3403.3	793.3	812.4	1.35

HORIZONTAL

	TAP SPEED	ESP	SCFM	R.P.M.	WATTS	BHP
PL Rated	TAP 1	0.2	2106.3	475.5	183.8	0.27
		0.4	1998.1	545.1	203.1	0.31
		0.6	1834.6	621.6	240.4	0.35
		0.8				

	TAP SPEED	ESP	SCFM	R.P.M.	WATTS	BHP
PL Max CFM	TAP 2	0.2	2257.2	497.2	224.8	0.33
		0.4	2148.7	563.6	245.8	0.37
		0.6	1994.5	635.9	281.9	0.42
		0.8	1716.1	719.9	311.2	0.47

	TAP SPEED	ESP	SCFM	R.P.M.	WATTS	BHP
Rated	TAP 3	0.2	3257.6	642.0	555.7	0.87
		0.4	3151.9	689.1	588.2	0.94
		0.6	3052.3	737.2	620.8	1.00
		0.8	2944.0	786.8	669.9	1.07

	TAP SPEED	ESP	SCFM	R.P.M.	WATTS	BHP
400 CFM/Ton @ 0.6 ESP	TAP 4	0.2	3577.1	688.5	691.0	1.12
		0.4	3474.8	730.7	727.6	1.18
		0.6	3389.0	772.7	760.9	1.25
		0.8	3317.2	814.2	813.9	1.32

	TAP SPEED	ESP	SCFM	R.P.M.	WATTS	BHP
400 CFM/Ton @ 0.8 ESP	TAP 5	0.2	3670.2	702.1	734.3	1.19
		0.4	3569.2	743.0	772.0	1.26
		0.6	3486.9	783.5	805.7	1.33
		0.8	3423.5	823.0	859.5	1.40

	TAP SPEED	ESP	SCFM	R.P.M.	WATTS	BHP
320 CFM/Ton	TAP 6	0.2	3084.0	616.8	489.3	0.76
		0.4	2977.1	666.9	519.8	0.82
		0.6	2869.1	718.6	552.5	0.88
		0.8	2736.7	773.4	598.8	0.95

	TAP SPEED	ESP	SCFM	R.P.M.	WATTS	BHP
350 CFM/Ton	TAP 7	0.2	3281.8	645.5	565.3	0.79
		0.4	3176.3	692.2	598.2	0.85
		0.6	3077.8	739.8	630.7	0.91
		0.8	2972.7	788.8	680.2	0.97

	TAP SPEED	ESP	SCFM	R.P.M.	WATTS	BHP
370 CFM/Ton	TAP 8	0.2	3418.0	665.3	621.3	0.99
		0.4	3313.8	709.9	655.8	1.06
		0.6	3221.4	754.8	688.6	1.12
		0.8	3132.8	800.1	739.9	1.19

	TAP SPEED	ESP	SCFM	R.P.M.	WATTS	BHP
400 CFM/Ton @ 0.6 ESP	TAP 9	0.2	3577.1	688.5	691.0	1.12
		0.4	3474.8	730.7	727.6	1.18
		0.6	3389.0	772.7	760.9	1.25
		0.8	3317.2	814.2	813.9	1.32

	TAP SPEED	ESP	SCFM	R.P.M.	WATTS	BHP
400 CFM/Ton @ 0.8 ESP	TAP 10	0.2	3670.2	702.1	734.3	1.19
		0.4	3569.2	743.0	772.0	1.26
		0.6	3486.9	783.5	805.7	1.33
		0.8	3423.5	823.0	859.5	1.40

APPENDIX A BLOWER PERFORMANCE DATA

8.5 TON AC

8.5T AC Medium Static

Motor 2.4 HP

Model: DSC102_MED

DOWNSHOT

	TAP SPEED	ESP	SCFM	R.P.M.	WATTS	BHP
PL Rated	TAP 1	0.2	2209.2	470.0	202.3	0.30
		0.4	2042.8	545.3	235.7	0.35
		0.6	1884.0	619.3	265.8	0.39
		0.8				
		1				
		1.2				
		1.4				

	TAP SPEED	ESP	SCFM	R.P.M.	WATTS	BHP
PL CFM Max	TAP 2	0.2	2418.1	495.2	254.9	0.38
		0.4	2260.0	565.8	288.6	0.43
		0.6	2109.8	635.6	320.1	0.48
		0.8	1874.4	716.4	361.8	0.55
		1				
		1.2				
		1.4				

	TAP SPEED	ESP	SCFM	R.P.M.	WATTS	BHP
Rated @ 0.8 ESP	TAP 3	0.2	3551.9	634.1	615.3	0.99
		0.4	3432.6	682.8	652.7	1.06
		0.6	3320.8	732.1	692.4	1.14
		0.8	3209.7	780.5	738.7	1.22
		1	3083.3	832.2	786.0	1.30
		1.2	2958.7	881.4	832.8	1.37
		1.4	2842.8	925.7	872.3	1.44

	TAP SPEED	ESP	SCFM	R.P.M.	WATTS	BHP
400 CFM/Ton @ 1.2 ESP	TAP 4	0.2	3913.9	679.7	769.7	1.27
		0.4	3803.7	723.2	809.8	1.35
		0.6	3699.8	767.1	852.4	1.43
		0.8	3612.1	808.6	900.9	1.51
		1	3505.7	856.0	952.5	1.60
		1.2	3393.5	902.8	1004.4	1.69
		1.4	3286.3	948.6	1051.4	1.77

	TAP SPEED	ESP	SCFM	R.P.M.	WATTS	BHP
400 CFM/Ton	TAP 5	0.2	4001.5	690.9	811.5	1.35
		0.4	3893.2	733.3	852.4	1.43
		0.6	3790.6	776.1	895.7	1.51
		0.8	3706.8	816.3	944.9	1.59
		1	3604.2	862.6	997.2	1.68
		1.2	3494.9	908.7	1050.2	1.77
		1.4	3389.7	954.6	1098.6	1.86

	TAP SPEED	ESP	SCFM	R.P.M.	WATTS	BHP
320 CFM/Ton	TAP 6	0.2	3450.2	621.5	576.3	0.92
		0.4	3327.9	671.8	613.1	0.99
		0.6	3213.5	722.7	652.0	1.07
		0.8	3093.9	773.5	697.8	1.14
		1	2960.9	826.4	743.6	1.22
		1.2	2832.7	876.2	788.8	1.30
		1.4	2714.2	919.7	825.8	1.36

	TAP SPEED	ESP	SCFM	R.P.M.	WATTS	BHP
350 CFM/Ton	TAP 7	0.2	3650.7	646.5	654.9	1.06
		0.4	3534.1	693.7	692.9	1.14
		0.6	3424.8	741.4	733.4	1.22
		0.8	3321.1	787.7	780.2	1.29
		1	3200.7	838.2	828.9	1.37
		1.2	3079.6	886.8	877.1	1.45
		1.4	2966.1	931.7	918.9	1.53

	TAP SPEED	ESP	SCFM	R.P.M.	WATTS	BHP
370 CFM/Ton	TAP 8	0.2	3790.7	664.1	714.1	1.17
		0.4	3677.6	709.2	753.2	1.25
		0.6	3571.4	754.9	794.7	1.33
		0.8	3477.0	798.5	842.5	1.40
		1	3364.4	847.3	892.8	1.49
		1.2	3248.2	895.0	943.1	1.57
		1.4	3138.0	940.5	987.8	1.65

	TAP SPEED	ESP	SCFM	R.P.M.	WATTS	BHP
400 CFM/Ton @ 1.2 ESP	TAP 9	0.2	3913.9	679.7	769.7	1.27
		0.4	3803.7	723.2	809.8	1.35
		0.6	3699.8	767.1	852.4	1.43
		0.8	3612.1	808.6	900.9	1.51
		1	3505.7	856.0	952.5	1.60
		1.2	3393.5	902.8	1004.4	1.69
		1.4	3286.3	948.6	1051.4	1.77

	TAP SPEED	ESP	SCFM	R.P.M.	WATTS	BHP
400 CFM/Ton	TAP 10	0.2	4001.5	690.9	811.5	1.35
		0.4	3893.2	733.3	852.4	1.43
		0.6	3790.6	776.1	895.7	1.51
		0.8	3706.8	816.3	944.9	1.59
		1	3604.2	862.6	997.2	1.68
		1.2	3494.9	908.7	1050.2	1.77
		1.4	3389.7	954.6	1098.6	1.86

HORIZONTAL

	TAP SPEED	ESP	SCFM	R.P.M.	WATTS	BHP
PL Rated	TAP 1	0.2	2219.8	491.9	214.4	0.31
		0.4	2111.4	559.0	235.0	0.35
		0.6	1954.9	632.4	271.5	0.40
		0.8				
		1				
		1.2				
		1.4				

	TAP SPEED	ESP	SCFM	R.P.M.	WATTS	BHP
PL CFM Max	TAP 2	0.2	2418.8	520.6	270.9	0.40
		0.4	2310.2	583.5	293.7	0.44
		0.6	2165.7	651.5	328.8	0.50
		0.8	1919.2	729.2	361.8	0.56
		1	1736.4	794.7	393.4	0.61
		1.2				
		1.4				

	TAP SPEED	ESP	SCFM	R.P.M.	WATTS	BHP
Rated @ 0.8 ESP	TAP 3	0.2	3504.1	677.8	658.4	1.06
		0.4	3400.9	721.1	694.1	1.12
		0.6	3312.2	764.4	727.1	1.19
		0.8	3233.1	807.6	779.3	1.26
		1	3124.7	856.7	822.3	1.34
		1.2	3023.9	901.9	852.8	1.41
		1.4	2849.3	962.7	905.4	1.50

	TAP SPEED	ESP	SCFM	R.P.M.	WATTS	BHP
400 CFM/Ton @ 1.2 ESP	TAP 4	0.2	3853.2	728.8	825.2	1.36
		0.4	3755.3	767.4	865.4	1.43
		0.6	3679.4	805.4	900.3	1.50
		0.8	3628.7	841.3	955.3	1.57
		1	3538.6	885.1	1000.1	1.65
		1.2	3449.0	927.6	1033.5	1.73
		1.4	3295.5	985.0	1091.6	1.84

	TAP SPEED	ESP	SCFM	R.P.M.	WATTS	BHP
400 CFM/Ton	TAP 5	0.2	3938.0	741.3	870.4	1.44
		0.4	3841.7	778.9	911.8	1.52
		0.6	3768.3	815.8	947.4	1.59
		0.8	3721.8	850.5	1002.7	1.66
		1	3635.5	892.9	1047.7	1.74
		1.2	3548.0	934.7	1081.9	1.82
		1.4	3401.2	990.7	1141.1	1.93

	TAP SPEED	ESP	SCFM	R.P.M.	WATTS	BHP
320 CFM/Ton	TAP 6	0.2	3406.3	663.6	616.4	0.98
		0.4	3302.0	708.3	650.8	1.05
		0.6	3209.1	753.5	683.5	1.11
		0.8	3119.2	799.1	734.6	1.18
		1	3005.1	849.7	776.9	1.26
		1.2	2900.5	895.5	806.6	1.32
		1.4	2721.6	956.8	857.4	1.41

	TAP SPEED	ESP	SCFM	R.P.M.	WATTS	BHP
350 CFM/Ton	TAP 7	0.2	3599.3	691.7	701.2	1.13
		0.4	3497.2	733.6	738.0	1.20
		0.6	3412.3	775.3	771.4	1.27
		0.8	3342.6	816.3	824.6	1.34
		1	3239.6	863.9	868.2	1.42
		1.2	3142.2	908.4	899.5	1.49
		1.4	2972.5	968.6	953.6	1.59

	TAP SPEED	ESP	SCFM	R.P.M.	WATTS	BHP
370 CFM/Ton	TAP 8	0.2	3734.2	711.4	765.1	1.25
		0.4	3634.2	751.5	803.8	1.32
		0.6	3554.3	791.1	837.8	1.39
		0.8	3495.9	829.2	892.1	1.46
		1	3400.0	874.8	936.5	1.54
		1.2	3307.1	918.2	968.8	1.61
		1.4	3145.3	977.2	1025.2	1.72

	TAP SPEED	ESP	SCFM	R.P.M.	WATTS	BHP
400 CFM/Ton @ 1.2 ESP	TAP 9	0.2	3853.2	728.8	825.2	1.36
		0.4	3755.3	767.4	865.4	1.43
		0.6	3679.4	805.4	900.3	1.50
		0.8	3628.7	841.3	955.3	1.57
		1	3538.6	885.1	1000.1	1.65
		1.2	3449.0	927.6	1033.5	1.73
		1.4	3295.5	985.0	1091.6	1.84

	TAP SPEED	ESP	SCFM	R.P.M.	WATTS	BHP
400 CFM/Ton	TAP 10	0.2	3938.0	741.3	870.4	1.44
		0.4	3841.7	778.9	911.8	1.52
		0.6	3768.3	815.8	947.4	1.59
		0.8	3721.8	850.5	1002.7	1.66
		1	3635.5	892.9	1047.7	1.74
		1.2	3548.0	934.7	1081.9	1.82
		1.4	3401.2	990.7	1141.1	1.93

APPENDIX A BLOWER PERFORMANCE DATA

8.5 TON AC

8.5T AC High Static | Motor 2.4 HP | Model: DSC102_HIGH

DOWNSHOT

	TAP SPEED	ESP	SCFM	R.P.M.	WATTS	BHP
PL Rated	TAP 1	0.2	2349.3	486.8	237.2	0.35
		0.4	2188.5	559.0	270.8	0.40
		0.6	2035.5	630.2	301.9	0.45
		0.8	1790.9	713.3	343.3	0.51
		1				
		1.2				
		1.4				
		1.6				
		1.8				

	TAP SPEED	ESP	SCFM	R.P.M.	WATTS	BHP
PL Max CFM	TAP 2	0.2	2553.2	511.5	290.9	0.43
		0.4	2400.3	579.3	324.7	0.49
		0.6	2255.6	646.3	357.2	0.55
		0.8	2037.8	722.7	399.2	0.61
		1	1833.5	786.4	427.3	0.67
		1.2				
		1.4				
		1.6				
		1.8				

	TAP SPEED	ESP	SCFM	R.P.M.	WATTS	BHP
Rated	TAP 3	0.2	3724.3	655.7	685.5	1.12
		0.4	3609.6	701.8	724.1	1.19
		0.6	3501.9	748.4	765.1	1.27
		0.8	3403.3	793.3	812.4	1.35
		1	3287.2	842.9	862.0	1.43
		1.2	3168.7	891.0	911.3	1.52
		1.4	3056.9	936.3	954.7	1.59
		1.6	2842.7	991.5	1003.5	1.69
		1.8	2731.7	1040.9	1042.3	1.77

	TAP SPEED	ESP	SCFM	R.P.M.	WATTS	BHP
400 CFM/Ton @ 1.4	TAP 4	0.2	4163.3	711.6	894.3	1.50
		0.4	4057.9	752.3	936.8	1.58
		0.6	3957.3	793.3	981.5	1.67
		0.8	3878.3	831.6	1032.0	1.75
		1	3781.5	875.9	1085.1	1.84
		1.2	3677.1	920.7	1140.1	1.94
		1.4	3575.5	966.1	1190.7	2.03
		1.6	3396.2	1004.4	1231.3	2.11
		1.8	3319.7	1052.5	1282.8	2.22

	TAP SPEED	ESP	SCFM	R.P.M.	WATTS	BHP
400 CFM/Ton	TAP 5	0.2	4233.2	720.7	932.6	1.57
		0.4	4128.8	760.7	975.9	1.66
		0.6	4028.7	801.0	1021.2	1.74
		0.8	3950.8	838.7	1072.3	1.82
		1	3855.9	882.2	1125.7	1.92
		1.2	3753.6	926.3	1181.4	2.02
		1.4	3653.5	971.4	1232.7	2.11
		1.6	3482.0	1007.9	1273.0	2.19
		1.8	3408.0	1055.5	1326.1	2.30

	TAP SPEED	ESP	SCFM	R.P.M.	WATTS	BHP
320 CFM/Ton	TAP 6	0.2	3656.4	647.2	657.2	1.06
		0.4	3539.9	694.3	695.3	1.14
		0.6	3430.8	741.9	735.8	1.22
		0.8	3327.5	788.1	782.7	1.30
		1	3207.5	838.5	831.4	1.38
		1.2	3086.6	887.1	879.8	1.46
		1.4	2973.2	932.0	921.7	1.53
		1.6	2755.3	990.6	972.5	1.63
		1.8	2636.6	1039.9	1009.0	1.71

	TAP SPEED	ESP	SCFM	R.P.M.	WATTS	BHP
350 CFM/Ton	TAP 7	0.2	3839.6	670.3	735.8	1.21
		0.4	3727.7	714.7	775.2	1.29
		0.6	3622.4	759.7	817.1	1.37
		0.8	3530.8	802.4	865.2	1.45
		1	3420.8	850.7	916.1	1.53
		1.2	3306.2	898.0	967.0	1.62
		1.4	3197.2	943.7	1012.7	1.70
		1.6	2990.0	993.5	1058.4	1.79
		1.8	2890.8	1043.0	1100.9	1.88

	TAP SPEED	ESP	SCFM	R.P.M.	WATTS	BHP
370 CFM/Ton	TAP 8	0.2	3965.8	686.3	794.3	1.31
		0.4	3856.7	729.1	834.8	1.40
		0.6	3753.6	772.4	877.8	1.48
		0.8	3668.4	813.1	926.7	1.56
		1	3564.2	859.9	978.7	1.65
		1.2	3453.7	906.3	1031.3	1.74
		1.4	3347.7	952.1	1079.2	1.82
		1.6	3149.9	996.8	1122.2	1.91
		1.8	3061.6	1046.0	1168.6	2.00

	TAP SPEED	ESP	SCFM	R.P.M.	WATTS	BHP
400 CFM/Ton @ 1.4	TAP 9	0.2	4163.3	711.6	894.3	1.50
		0.4	4057.9	752.3	936.8	1.58
		0.6	3957.3	793.3	981.5	1.67
		0.8	3878.3	831.6	1032.0	1.75
		1	3781.5	875.9	1085.1	1.84
		1.2	3677.1	920.7	1140.1	1.94
		1.4	3575.5	966.1	1190.7	2.03
		1.6	3396.2	1004.4	1231.3	2.11
		1.8	3319.7	1052.5	1282.8	2.22

	TAP SPEED	ESP	SCFM	R.P.M.	WATTS	BHP
400 CFM/Ton	TAP 10	0.2	4233.2	720.7	932.6	1.57
		0.4	4128.8	760.7	975.9	1.66
		0.6	4028.7	801.0	1021.2	1.74
		0.8	3950.8	838.7	1072.3	1.82
		1	3855.9	882.2	1125.7	1.92
		1.2	3753.6	926.3	1181.4	2.02
		1.4	3653.5	971.4	1232.7	2.11
		1.6	3482.0	1007.9	1273.0	2.19
		1.8	3408.0	1055.5	1326.1	2.30

HORIZONTAL

	TAP SPEED	ESP	SCFM	R.P.M.	WATTS	BHP
PL Rated	TAP 1	0.2	2353.2	511.1	251.9	0.37
		0.4	2244.6	575.4	274.0	0.41
		0.6	2096.3	645.1	309.5	0.46
		0.8	1837.0	725.4	341.0	0.52
		1				
		1.2				
		1.4				
		1.6				
		1.8				

	TAP SPEED	ESP	SCFM	R.P.M.	WATTS	BHP
PL Max CFM	TAP 2	0.2	2547.7	539.2	309.4	0.46
		0.4	2439.1	599.5	333.7	0.51
		0.6	2302.2	664.1	368.1	0.56
		0.8	2080.1	737.0	404.0	0.62
		1	1907.1	800.5	437.3	0.68
		1.2	1759.9	851.0	460.7	0.72
		1.4				
		1.6				
		1.8				

	TAP SPEED	ESP	SCFM	R.P.M.	WATTS	BHP
Rated	TAP 3	0.2	3670.2	702.1	734.3	1.19
		0.4	3569.2	743.0	772.0	1.26
		0.6	3486.9	783.5	805.7	1.33
		0.8	3423.5	823.0	859.5	1.40
		1	3324.3	869.5	903.6	1.48
		1.2	3229.3	913.5	935.4	1.55
		1.4	3063.6	973.1	990.7	1.66
		1.6	2945.5	1019.3	1036.5	1.73
		1.8	2816.7	1062.1	1075.1	1.81

	TAP SPEED	ESP	SCFM	R.P.M.	WATTS	BHP
400 CFM/Ton @ 1.4	TAP 4	0.2	4094.9	764.3	960.0	1.61
		0.4	4002.2	800.5	1003.5	1.68
		0.6	3932.8	835.8	1040.9	1.76
		0.8	3890.3	868.6	1096.2	1.83
		1	3810.1	908.6	1141.4	1.91
		1.2	3725.6	948.9	1177.0	2.00
		1.4	3593.4	1001.6	1238.0	2.11
		1.6	3487.8	1045.3	1288.0	2.20
		1.8	3403.5	1076.6	1315.9	2.27

	TAP SPEED	ESP	SCFM	R.P.M.	WATTS	BHP
400 CFM/Ton	TAP 5	0.2	4162.8	774.3	1001.5	1.68
		0.4	4071.9	809.9	1046.0	1.76
		0.6	4003.9	844.8	1084.3	1.84
		0.8	3961.5	877.0	1139.4	1.91
		1	3883.6	916.0	1184.5	1.99
		1.2	3800.0	955.6	1220.8	2.08
		1.4	3675.0	1006.5	1282.5	2.19
		1.6	3572.0	1049.5	1332.8	2.28
		1.8	3491.9	1080.0	1360.1	2.35

	TAP SPEED	ESP	SCFM	R.P.M.	WATTS	BHP
320 CFM/Ton	TAP 6	0.2	3604.8	692.5	703.7	1.14
		0.4	3502.8	734.3	740.6	1.21
		0.6	3418.1	775.9	774.0	1.28
		0.8	3348.9	816.8	827.3	1.34
		1	3246.2	864.3	870.9	1.42
		1.2	3149.0	908.8	902.2	1.49
		1.4	2979.6	969.0	956.5	1.59
		1.6	2860.0	1015.3	1001.3	1.67
		1.8	2722.2	1060.7	1042.4	1.74

	TAP SPEED	ESP	SCFM	R.P.M.	WATTS	BHP
350 CFM/Ton	TAP 7	0.2	3781.4	718.3	788.5	1.29
		0.4	3682.1	757.8	827.8	1.36
		0.6	3603.9	796.7	862.1	1.43
		0.8	3548.8	833.9	916.7	1.50
		1	3455.3	878.8	961.3	1.58
		1.2	3363.7	921.9	994.1	1.66
		1.4	3205.1	980.3	1051.1	1.77
		1.6	3089.8	1026.1	1098.2	1.85
		1.8	2975.3	1065.0	1133.1	1.92

	TAP SPEED	ESP	SCFM	R.P.M.	WATTS	BHP
370 CFM/Ton	TAP 8	0.2	3903.4	736.2	851.7	1.41
		0.4	3806.5	774.2	892.6	1.48
		0.6	3732.1	811.5	927.9	1.55
		0.8	3684.0	846.7	983.1	1.62
		1	3596.1	889.7	1028.1	1.70
		1.2	3507.8	931.8	1061.9	1.78
		1.4	3358.3	988.4	1120.6	1.89
		1.6	3246.4	1033.5	1169.1	1.98
		1.8	3145.6	1068.9	1200.6	2.05

	TAP SPEED	ESP	SCFM	R.P.M.	WATTS	BHP
400 CFM/Ton @ 1.4	TAP 9	0.2	4094.9	764.3	960.0	1.61
		0.4	4002.2	800.5	1003.5	1.68
		0.6	3932.8	835.8	1040.9	1.76
		0.8	3890.3	868.6	1096.2	1.83
		1	3810.1	908.6	1141.4	1.91
		1.2	3725.6	948.9	1177.0	2.00
		1.4	3593.4	1001.6	1238.0	2.11
		1.6	3487.8	1045.3	1288.0	2.20
		1.8	3403.5	1076.6	1315.9	2.27

	TAP SPEED	ESP	SCFM	R.P.M.	WATTS	BHP
400 CFM/Ton	TAP 10	0.2	4162.8	774.3	1001.5	1.68
		0.4	4071.9	809.9	1046.0	1.76
		0.6	4003.9	844.8	1084.3	1.84
		0.8	3961.5	877.0	1139.4	1.91
		1	3883.6	916.0	1184.5	1.99
		1.2	3800.0	955.6	1220.8	2.08
		1.4	3675.0	1006.5	1282.5	2.19
		1.6	3572.0	1049.5	1332.8	2.28
		1.8	3491.9	1080.0	1360.1	2.35

APPENDIX A BLOWER PERFORMANCE DATA
10 TON AC

10T AC Standard Static | Motor 2.4 HP | Model: DSC120_STD

DOWNSHOT

	TAP SPEED	ESP	SCFM	R.P.M.	WATTS	BHP
PL Rated	TAP 1	0.2	2154.1	434.4	172.3	0.24
		0.4				
		0.6				
		0.8				
PL Max CFM	TAP 2	0.2	2471.3	466.7	232.0	0.34
		0.4	2292.9	546.0	268.3	0.40
		0.6				
		0.8				
Rated	TAP 3	0.2	3557.9	578.9	510.4	0.85
		0.4	3437.1	641.5	562.0	0.94
		0.6	3284.1	701.8	603.1	1.03
		0.8	3163.0	755.0	646.7	1.11
400 CFM/Ton @ 0.6 ESP	TAP 4	0.2	4202.8	647.3	756.6	1.29
		0.4	4100.5	700.7	815.5	1.39
		0.6	4010.1	746.0	863.5	1.48
		0.8	3902.9	796.2	914.4	1.58
400 CFM/Ton @ 0.8 ESP	TAP 5	0.2	4308.3	658.6	805.5	1.37
		0.4	4207.3	710.6	865.6	1.48
		0.6	4121.8	754.6	915.5	1.57
		0.8	4015.0	804.0	967.3	1.67
320 CFM/Ton	TAP 6	0.2	3720.2	595.9	565.0	0.95
		0.4	3605.5	656.2	618.6	1.04
		0.6	3472.7	711.7	660.7	1.13
		0.8	3356.7	764.4	706.4	1.21
350 CFM/Ton	TAP 7	0.2	3992.4	624.7	667.0	0.99
		0.4	3885.8	681.1	723.8	1.08
		0.6	3780.6	730.1	768.7	1.16
		0.8	3670.9	781.6	817.5	1.24
370 CFM/Ton	TAP 8	0.2	4192.1	646.1	751.7	1.28
		0.4	4089.6	699.7	810.6	1.38
		0.6	3998.6	745.1	858.4	1.47
		0.8	3891.3	795.4	909.2	1.57
400 CFM/Ton @ 0.6 ESP	TAP 9	0.2	4202.8	647.3	756.6	1.29
		0.4	4100.5	700.7	815.5	1.39
		0.6	4010.1	746.0	863.5	1.48
		0.8	3902.9	796.2	914.4	1.58
400 CFM/Ton @ 0.8 ESP	TAP 10	0.2	4308.3	658.6	805.5	1.37
		0.4	4207.3	710.6	865.6	1.48
		0.6	4121.8	754.6	915.5	1.57
		0.8	4015.0	804.0	967.3	1.67

HORIZONTAL

	TAP SPEED	ESP	SCFM	R.P.M.	WATTS	BHP
PL Rated	TAP 1	0.2	2099.0	439.9	228.0	0.24
		0.4				
		0.6				
		0.8				
PL Max CFM	TAP 2	0.2	2397.2	474.9	269.3	0.35
		0.4	2148.1	577.7	327.3	0.42
		0.6				
		0.8				
Rated	TAP 3	0.2	3418.9	596.4	508.0	0.87
		0.4	3305.7	652.1	553.4	0.95
		0.6	3142.7	716.8	606.8	1.05
		0.8	3019.6	766.3	643.2	1.12
400 CFM/Ton @ 0.6 ESP	TAP 4	0.2	4025.7	670.5	848.0	1.33
		0.4	3949.9	710.2	893.7	1.41
		0.6	3822.5	763.8	951.3	1.52
		0.8	3712.7	808.9	1014.7	1.61
400 CFM/Ton @ 0.8 ESP	TAP 5	0.2	4125.1	682.8	807.7	1.42
		0.4	4050.7	721.2	852.8	1.50
		0.6	3927.4	772.8	910.2	1.61
		0.8	3818.0	817.1	972.8	1.70
320 CFM/Ton	TAP 6	0.2	3571.6	614.9	560.7	0.98
		0.4	3471.7	665.5	605.3	1.06
		0.6	3319.1	727.5	660.0	1.15
		0.8	3200.8	776.1	704.4	1.23
350 CFM/Ton	TAP 7	0.2	3827.7	646.1	662.9	1.03
		0.4	3744.5	689.7	706.9	1.09
		0.6	3607.4	747.0	763.3	1.19
		0.8	3495.1	793.8	818.5	1.26
370 CFM/Ton	TAP 8	0.2	4015.6	669.3	750.6	1.32
		0.4	3939.5	709.1	795.1	1.40
		0.6	3811.7	762.9	852.3	1.51
		0.8	3701.9	808.1	912.9	1.60
400 CFM/Ton @ 0.6 ESP	TAP 9	0.2	4025.7	670.5	848.0	1.33
		0.4	3949.9	710.2	893.7	1.41
		0.6	3822.5	763.8	951.3	1.52
		0.8	3712.7	808.9	1014.7	1.61
400 CFM/Ton @ 0.8 ESP	TAP 10	0.2	4125.1	682.8	807.7	1.42
		0.4	4050.7	721.2	852.8	1.50
		0.6	3927.4	772.8	910.2	1.61
		0.8	3818.0	817.1	972.8	1.70

APPENDIX A BLOWER PERFORMANCE DATA
10 TON AC

10T AC Medium Static

Motor 3.5 HP

Model: DSC120_MED

DOWNSHOT

	TAP SPEED	ESP	SCFM	R.P.M.	WATTS	BHP
PL Rated	TAP 1	0.2	2471.3	466.7	232.0	0.34
		0.4	2292.9	546.0	268.3	0.40
		0.6				
		0.8				
		1				
		1.2				
		1.4				

	TAP SPEED	ESP	SCFM	R.P.M.	WATTS	BHP
PL CFM Max	TAP 2	0.2	2788.9	499.2	300.2	0.46
		0.4	2629.9	573.5	341.3	0.53
		0.6	2351.0	662.9	382.1	0.61
		0.8	2195.2	716.7	414.4	0.66
		1				
		1.2				
		1.4				

	TAP SPEED	ESP	SCFM	R.P.M.	WATTS	BHP
Rated @ 0.8 ESP	TAP 3	0.2	3864.6	611.2	617.4	1.02
		0.4	3754.6	669.4	672.7	1.12
		0.6	3637.5	721.2	716.1	1.20
		0.8	3525.2	773.3	763.5	1.29
		1	3321.7	842.5	820.3	1.41
		1.2	3193.2	892.9	870.6	1.49
		1.4	2945.2	965.4	934.3	1.61

	TAP SPEED	ESP	SCFM	R.P.M.	WATTS	BHP
400 CFM/Ton @ 1.2 ESP	TAP 4	0.2	4556.3	685.7	933.7	1.56
		0.4	4455.8	734.4	996.0	1.67
		0.6	4373.8	777.2	1051.7	1.77
		0.8	4265.0	824.2	1105.1	1.87
		1	4121.0	879.2	1165.1	2.00
		1.2	4013.2	925.5	1221.8	2.10
		1.4	3807.0	986.7	1292.2	2.24

	TAP SPEED	ESP	SCFM	R.P.M.	WATTS	BHP
400 CFM/Ton	TAP 5	0.2	4738.4	705.9	1042.2	1.74
		0.4	4635.5	752.3	1105.7	1.85
		0.6	4547.3	796.0	1167.0	1.96
		0.8	4434.0	840.8	1221.3	2.07
		1	4311.1	889.3	1280.9	2.19
		1.2	4201.5	933.7	1337.7	2.30
		1.4	4019.9	986.6	1406.3	2.43

	TAP SPEED	ESP	SCFM	R.P.M.	WATTS	BHP
320 CFM/Ton	TAP 6	0.2	4202.8	647.3	756.6	1.26
		0.4	4100.5	700.7	815.5	1.37
		0.6	4010.1	746.0	863.5	1.45
		0.8	3902.9	796.2	914.4	1.55
		1	3725.1	860.2	973.5	1.68
		1.2	3611.2	909.1	1027.9	1.77
		1.4	3375.2	979.4	1097.0	1.91

	TAP SPEED	ESP	SCFM	R.P.M.	WATTS	BHP
350 CFM/Ton	TAP 7	0.2	4359.7	664.2	830.5	1.39
		0.4	4259.1	715.5	891.1	1.49
		0.6	4175.3	759.1	942.0	1.59
		0.8	4068.4	808.0	994.2	1.69
		1	3904.7	868.6	1053.9	1.81
		1.2	3794.8	916.5	1109.6	1.91
		1.4	3569.4	983.7	1180.0	2.05

	TAP SPEED	ESP	SCFM	R.P.M.	WATTS	BHP
370 CFM/Ton	TAP 8	0.2	4459.8	675.1	881.5	1.47
		0.4	4359.6	725.1	942.9	1.58
		0.6	4277.7	768.0	996.1	1.68
		0.8	4170.2	816.0	1049.0	1.78
		1	4016.1	873.9	1109.0	1.91
		1.2	3907.8	921.1	1165.2	2.01
		1.4	3691.3	985.6	1235.9	2.15

	TAP SPEED	ESP	SCFM	R.P.M.	WATTS	BHP
400 CFM/Ton @ 1.2 ESP	TAP 9	0.2	4556.3	685.7	933.7	1.56
		0.4	4455.8	734.4	996.0	1.67
		0.6	4373.8	777.2	1051.7	1.77
		0.8	4265.0	824.2	1105.1	1.87
		1	4121.0	879.2	1165.1	2.00
		1.2	4013.2	925.5	1221.8	2.10
		1.4	3807.0	986.7	1292.2	2.24

	TAP SPEED	ESP	SCFM	R.P.M.	WATTS	BHP
400 CFM/Ton	TAP 10	0.2	4738.4	705.9	1042.2	1.74
		0.4	4635.5	752.3	1105.7	1.85
		0.6	4547.3	796.0	1167.0	1.96
		0.8	4434.0	840.8	1221.3	2.07
		1	4311.1	889.3	1280.9	2.19
		1.2	4201.5	933.7	1337.7	2.30
		1.4	4019.9	986.6	1406.3	2.43

HORIZONTAL

	TAP SPEED	ESP	SCFM	R.P.M.	WATTS	BHP
PL Rated	TAP 1	0.2	2397.2	474.9	269.3	0.34
		0.4	2148.1	577.7	327.3	0.42
		0.6				
		0.8				
		1				
		1.2				
		1.4				

	TAP SPEED	ESP	SCFM	R.P.M.	WATTS	BHP
PL CFM Max	TAP 2	0.2	2695.8	510.1	321.9	0.47
		0.4	2493.4	597.2	375.2	0.55
		0.6	2271.6	673.8	420.7	0.62
		0.8	2115.6	726.4	406.9	0.67
		1				
		1.2				
		1.4				

	TAP SPEED	ESP	SCFM	R.P.M.	WATTS	BHP
Rated @ 0.8 ESP	TAP 3	0.2	3707.4	631.4	612.6	1.05
		0.4	3617.4	678.0	656.8	1.13
		0.6	3473.3	737.6	712.4	1.23
		0.8	3358.6	785.2	763.0	1.31
		1	3124.7	863.8	836.7	1.44
		1.2	2912.5	925.2	895.9	1.55
		1.4	2749.8	974.5	947.6	1.63

	TAP SPEED	ESP	SCFM	R.P.M.	WATTS	BHP
400 CFM/Ton @ 1.2 ESP	TAP 4	0.2	4358.6	712.1	946.8	1.62
		0.4	4280.6	749.3	994.4	1.70
		0.6	4164.4	796.1	1051.9	1.81
		0.8	4053.3	837.9	1115.4	1.91
		1	3889.4	899.8	1189.0	2.05
		1.2	3711.4	954.9	1257.6	2.17
		1.4	3593.0	1003.1	1317.2	2.28

	TAP SPEED	ESP	SCFM	R.P.M.	WATTS	BHP
400 CFM/Ton	TAP 5	0.2	4530.1	734.0	1067.8	1.81
		0.4	4441.9	772.4	1118.3	1.90
		0.6	4328.1	815.4	1175.3	2.01
		0.8	4212.9	855.0	1235.8	2.10
		1	4077.6	908.2	1305.2	2.23
		1.2	3913.8	961.0	1375.1	2.36
		1.4	3807.5	1007.4	1434.7	2.48

	TAP SPEED	ESP	SCFM	R.P.M.	WATTS	BHP
320 CFM/Ton	TAP 6	0.2	4025.7	670.5	755.7	1.31
		0.4	3949.9	710.2	800.3	1.38
		0.6	3822.5	763.8	857.5	1.49
		0.8	3712.7	808.9	918.3	1.58
		1	3506.7	882.1	994.5	1.72
		1.2	3308.0	940.8	1059.0	1.83
		1.4	3166.7	990.5	1115.9	1.93

	TAP SPEED	ESP	SCFM	R.P.M.	WATTS	BHP
350 CFM/Ton	TAP 7	0.2	4173.5	688.9	834.4	1.44
		0.4	4099.2	726.7	879.9	1.52
		0.6	3977.7	777.4	937.5	1.62
		0.8	3868.3	821.2	1000.7	1.72
		1	3679.0	890.2	1076.5	1.86
		1.2	3488.6	947.3	1143.1	1.98
		1.4	3357.3	996.7	1201.5	2.08

	TAP SPEED	ESP	SCFM	R.P.M.	WATTS	BHP
370 CFM/Ton	TAP 8	0.2	4267.7	700.7	889.6	1.53
		0.4	4192.4	737.9	936.0	1.61
		0.6	4073.9	786.7	993.6	1.72
		0.8	3964.0	829.5	1057.3	1.81
		1	3787.0	895.2	1132.3	1.95
		1.2	3602.5	951.3	1200.0	2.08
		1.4	3477.8	1000.2	1259.1	2.18

	TAP SPEED	ESP	SCFM	R.P.M.	WATTS	BHP
400 CFM/Ton @ 1.2 ESP	TAP 9	0.2	4358.6	712.1	946.8	1.62
		0.4	4280.6	749.3	994.4	1.70
		0.6	4164.4	796.1	1051.9	1.81
		0.8	4053.3	837.9	1115.4	1.91
		1	3889.4	899.8	1189.0	2.05
		1.2	3711.4	954.9	1257.6	2.17
		1.4	3593.0	1003.1	1317.2	2.28

	TAP SPEED	ESP	SCFM	R.P.M.	WATTS	BHP
400 CFM/Ton	TAP 10	0.2	4530.1	734.0	1067.8	1.81
		0.4	4441.9	772.4	1118.3	1.90
		0.6	4328.1	815.4	1175.3	2.01
		0.8	4212.9	855.0	1235.8	2.10
		1	4077.6	908.2	1305.2	2.23
		1.2	3913.8	961.0	1375.1	2.36
		1.4	3807.5	1007.4	1434.7	2.48

APPENDIX A BLOWER PERFORMANCE DATA
10 TON AC

10T AC High Static

Motor 3.5 HP

Model: DSC120_HIGH

DOWNSHOT

	TAP SPEED	ESP	SCFM	R.P.M.	WATTS	BHP
PL Rated	TAP 1	0.2	2586.6	478.5	255.7	0.38
		0.4	2415.4	556.0	293.8	0.44
		0.6	2096.8	654.4	335.5	0.52
		0.8				
		1				
		1.2				
		1.4				
		1.6				
		1.8				

	TAP SPEED	ESP	SCFM	R.P.M.	WATTS	BHP
PL Max CFM	TAP 2	0.2	2876.7	508.2	320.8	0.50
		0.4	2722.8	581.2	363.1	0.57
		0.6	2460.3	666.8	403.7	0.65
		0.8	2309.3	720.6	437.3	0.70
		1	2054.2	792.6	481.6	0.77
		1.2				
		1.4				
		1.6				
		1.8				

	TAP SPEED	ESP	SCFM	R.P.M.	WATTS	BHP
Rated	TAP 3	0.2	3998.1	625.3	669.3	1.11
		0.4	3891.7	681.6	726.2	1.21
		0.6	3786.9	730.5	771.1	1.30
		0.8	3677.3	781.9	820.0	1.39
		1	3483.3	849.4	877.8	1.51
		1.2	3361.5	899.3	929.9	1.60
		1.4	3116.6	971.6	996.2	1.73
		1.6	2988.6	1013.8	1039.7	1.80
		1.8	2684.1	1082.5	1114.9	1.92

	TAP SPEED	ESP	SCFM	R.P.M.	WATTS	BHP
400 CFM/Ton @ 1.6	TAP 4	0.2	4824.0	715.5	1098.3	1.83
		0.4	4719.0	760.8	1162.4	1.94
		0.6	4624.7	805.8	1226.8	2.06
		0.8	4508.1	849.3	1281.3	2.17
		1	4396.2	894.1	1340.4	2.28
		1.2	4284.3	937.4	1397.0	2.39
		1.4	4117.2	985.4	1464.1	2.52
		1.6	4007.9	1028.0	1519.5	2.62
		1.8	3799.2	1085.2	1593.2	2.77

	TAP SPEED	ESP	SCFM	R.P.M.	WATTS	BHP
400 CFM/Ton	TAP 5	0.2	4949.6	729.8	1188.0	1.97
		0.4	4840.1	773.6	1252.7	2.09
		0.6	4732.3	821.3	1322.3	2.21
		0.8	4609.4	862.7	1376.9	2.33
		1	4515.2	901.3	1435.0	2.43
		1.2	4397.8	942.8	1490.8	2.54
		1.4	4255.9	981.8	1554.6	2.65
		1.6	4147.2	1024.7	1611.9	2.76
		1.8	4001.3	1074.6	1678.2	2.90

	TAP SPEED	ESP	SCFM	R.P.M.	WATTS	BHP
320 CFM/Ton	TAP 6	0.2	3876.4	612.4	621.8	1.03
		0.4	3766.7	670.4	677.3	1.13
		0.6	3650.8	722.0	720.8	1.21
		0.8	3538.8	774.0	768.4	1.30
		1	3336.1	843.1	825.2	1.42
		1.2	3208.3	893.5	875.8	1.50
		1.4	2960.5	966.0	939.6	1.62
		1.6	2828.3	1008.2	981.6	1.69
		1.8	2540.8	1075.0	1052.3	1.81

	TAP SPEED	ESP	SCFM	R.P.M.	WATTS	BHP
350 CFM/Ton	TAP 7	0.2	4093.7	635.5	708.9	1.18
		0.4	3989.4	690.5	766.7	1.28
		0.6	3892.1	737.5	813.0	1.37
		0.8	3783.9	788.4	862.8	1.46
		1	3597.2	854.4	921.3	1.59
		1.2	3479.4	903.9	974.5	1.68
		1.4	3238.0	975.5	1042.3	1.81
		1.6	3113.1	1017.7	1087.2	1.89
		1.8	2799.7	1087.4	1165.1	2.02

	TAP SPEED	ESP	SCFM	R.P.M.	WATTS	BHP
370 CFM/Ton	TAP 8	0.2	4277.1	655.3	790.7	1.32
		0.4	4175.7	707.7	850.4	1.43
		0.6	4088.9	752.0	899.8	1.51
		0.8	3982.1	801.7	951.3	1.61
		1	3810.8	864.1	1010.7	1.74
		1.2	3699.0	912.6	1065.8	1.84
		1.4	3467.5	981.6	1135.6	1.98
		1.6	3348.0	1023.8	1183.0	2.06
		1.8	3029.4	1094.0	1264.6	2.20

	TAP SPEED	ESP	SCFM	R.P.M.	WATTS	BHP
400 CFM/Ton @ 1.6	TAP 9	0.2	4824.0	715.5	1098.3	1.83
		0.4	4719.0	760.8	1162.4	1.94
		0.6	4624.7	805.8	1226.8	2.06
		0.8	4508.1	849.3	1281.3	2.17
		1	4396.2	894.1	1340.4	2.28
		1.2	4284.3	937.4	1397.0	2.39
		1.4	4117.2	985.4	1464.1	2.52
		1.6	4007.9	1028.0	1519.5	2.62
		1.8	3799.2	1085.2	1593.2	2.77

	TAP SPEED	ESP	SCFM	R.P.M.	WATTS	BHP
400 CFM/Ton	TAP 10	0.2	4949.6	729.8	1188.0	1.97
		0.4	4840.1	773.6	1252.7	2.09
		0.6	4732.3	821.3	1322.3	2.21
		0.8	4609.4	862.7	1376.9	2.33
		1	4515.2	901.3	1435.0	2.43
		1.2	4397.8	942.8	1490.8	2.54
		1.4	4255.9	981.8	1554.6	2.65
		1.6	4147.2	1024.7	1611.9	2.76
		1.8	4001.3	1074.6	1678.2	2.90

HORIZONTAL

	TAP SPEED	ESP	SCFM	R.P.M.	WATTS	BHP
PL Rated	TAP 1	0.2	2505.5	487.7	287.0	0.39
		0.4	2273.9	584.6	343.2	0.46
		0.6	2034.5	664.1	386.2	0.53
		0.8				
		1				
		1.2				
		1.4				
		1.6				
		1.8				

	TAP SPEED	ESP	SCFM	R.P.M.	WATTS	BHP
PL Max CFM	TAP 2	0.2	2778.3	519.9	338.7	0.51
		0.4	2587.9	602.9	390.7	0.59
		0.6	2373.5	678.2	437.3	0.66
		0.8	2222.0	730.5	430.1	0.71
		1				
		1.2				
		1.4				
		1.6				
		1.8				

	TAP SPEED	ESP	SCFM	R.P.M.	WATTS	BHP
Rated	TAP 3	0.2	3833.1	646.8	665.2	1.15
		0.4	3750.2	690.2	709.3	1.23
		0.6	3613.3	747.5	765.7	1.33
		0.8	3501.1	794.2	821.0	1.41
		1	3277.0	871.2	896.2	1.55
		1.2	3069.5	931.6	957.6	1.66
		1.4	2915.2	981.2	1011.7	1.74
		1.6	2633.4	1045.9	1079.2	1.86
		1.8	2422.4	1091.6	1116.0	1.94

	TAP SPEED	ESP	SCFM	R.P.M.	WATTS	BHP
400 CFM/Ton @ 1.6	TAP 4	0.2	4610.8	744.4	1131.4	1.90
		0.4	4515.0	784.1	1183.7	2.00
		0.6	4401.3	825.3	1240.3	2.11
		0.8	4283.1	863.8	1298.1	2.20
		1	4163.4	911.9	1364.6	2.33
		1.2	4007.3	963.5	1434.9	2.46
		1.4	3906.8	1008.7	1494.0	2.57
		1.6	3680.0	1059.2	1550.7	2.70
		1.8	3495.2	1113.5	1624.4	2.84

	TAP SPEED	ESP	SCFM	R.P.M.	WATTS	BHP
400 CFM/Ton	TAP 5	0.2	4729.2	759.8	1234.3	2.05
		0.4	4618.3	802.6	1289.9	2.16
		0.6	4503.4	840.9	1345.4	2.27
		0.8	4379.3	877.6	1397.5	2.37
		1	4285.5	917.0	1458.6	2.47
		1.2	4142.1	966.6	1529.1	2.61
		1.4	4050.2	1009.8	1587.0	2.72
		1.6	3853.7	1053.0	1635.7	2.84
		1.8	3678.5	1109.1	1718.3	2.99

	TAP SPEED	ESP	SCFM	R.P.M.	WATTS	BHP
320 CFM/Ton	TAP 6	0.2	3718.5	632.8	617.1	1.06
		0.4	3629.2	679.0	661.2	1.14
		0.6	3485.8	738.4	716.9	1.24
		0.8	3371.3	786.0	768.0	1.32
		1	3138.3	864.5	841.8	1.45
		1.2	2926.4	925.8	901.2	1.56
		1.4	2764.4	975.1	953.2	1.64
		1.6	2488.6	1038.7	1018.3	1.75
		1.8	2277.3	1083.5	1051.8	1.82

	TAP SPEED	ESP	SCFM	R.P.M.	WATTS	BHP
350 CFM/Ton	TAP 7	0.2	3923.0	657.8	705.9	1.22
		0.4	3844.1	699.3	750.1	1.30
		0.6	3711.9	754.9	806.9	1.40
		0.8	3601.1	800.9	865.1	1.49
		1	3384.9	876.3	941.0	1.63
		1.2	3181.3	935.9	1003.9	1.74
		1.4	3033.0	985.7	1059.4	1.83
		1.6	2748.5	1050.9	1128.3	1.95
		1.8	2538.1	1097.4	1168.0	2.04

	TAP SPEED	ESP	SCFM	R.P.M.	WATTS	BHP
370 CFM/Ton	TAP 8	0.2	4095.6	679.2	791.9	1.37
		0.4	4021.0	717.9	836.8	1.45
		0.6	3896.5	770.1	894.2	1.55
		0.8	3787.1	814.6	956.3	1.64
		1	3588.7	886.0	1032.5	1.78
		1.2	3393.7	943.9	1098.0	1.90
		1.4	3257.2	993.5	1155.7	2.00
		1.6	2972.9	1058.3	1225.7	2.13
		1.8	2765.2	1106.4	1271.7	2.23

	TAP SPEED	ESP	SCFM	R.P.M.	WATTS	BHP
400 CFM/Ton @ 1.6	TAP 9	0.2	4610.8	744.4	1131.4	1.90
		0.4	4515.0	784.1	1183.7	2.00
		0.6	4401.3	825.3	1240.3	2.11
		0.8	4283.1	863.8	1298.1	2.20
		1	4163.4	911.9	1364.6	2.33
		1.2	4007.3	963.5	1434.9	2.46
		1.4	3906.8	1008.7	1494.0	2.57
		1.6	3680.0	1059.2	1550.7	2.70
		1.8	3495.2	1113.5	1624.4	2.84

	TAP SPEED	ESP	SCFM	R.P.M.	WATTS	BHP
400 CFM/Ton	TAP 10	0.2	4729.2	759.8	1234.3	2.05
		0.4	4618.3	802.6	1289.9	2.16
		0.6	4503.4	840.9	1345.4	2.27
		0.8	4379.3	877.6	1397.5	2.37
		1	4285.5	917.0	1458.6	2.47
		1.2	4142.1	966.6	1529.1	2.61
		1.4	4050.2	1009.8	1587.0	2.72
		1.6	3853.7	1053.0	1635.7	2.84
		1.8	3678.5	1109.1	1718.3	2.99

APPENDIX A BLOWER PERFORMANCE DATA

12.5 TON AC

12.5T AC Standard Static

Motor 3.5 HP

Model: DSC150_STD

DOWNSHOT

	TAP SPEED	ESP	SCFM	R.P.M.	WATTS	BHP
PL Rated @ 0.15	TAP 1	0.2	2158.1	453.9	184.5	0.25
		0.4	1860.0	565.3	228.4	0.31
		0.6	1532.3	656.6	263.5	0.37
		0.8	1322.6	710.0	289.8	0.40
PL Rated (Max CFM) @ 0.35 ESP	TAP 2	0.2	2501.2	490.9	256.6	0.37
		0.4	2252.9	585.8	299.1	0.44
		0.6	1977.1	669.2	338.7	0.51
		0.8	1761.5	728.6	372.8	0.55
Rated @ .35 ESP	TAP 3	0.2	4373.2	699.8	914.2	1.49
		0.4	4291.5	740.1	970.7	1.58
		0.6	4199.5	786.7	1024.0	1.68
		0.8	4047.1	845.2	1087.3	1.80
370 CFM/Ton @.6	TAP 4	0.2	4882.7	761.2	1258.8	2.05
		0.4	4780.7	808.8	1332.8	2.18
		0.6	4676.2	849.3	1383.0	2.29
		0.8	4601.1	886.1	1446.1	2.39
370 CFM/Ton @ .8	TAP 5	0.2	4953.8	770.2	1320.7	2.14
		0.4	4843.5	820.6	1398.2	2.29
		0.6	4732.0	860.6	1447.5	2.40
		0.8	4672.8	892.6	1509.8	2.49
320 CFM/Ton	TAP 6	0.2	4373.2	699.8	914.2	1.49
		0.4	4291.5	740.1	970.7	1.58
		0.6	4199.5	786.7	1024.0	1.68
		0.8	4047.1	845.2	1087.3	1.80
340 CFM/Ton	TAP 7	0.2	4602.8	727.0	1052.3	1.55
		0.4	4518.7	768.3	1115.2	1.64
		0.6	4427.6	811.7	1167.8	1.73
		0.8	4303.8	862.6	1231.9	1.84
350 CFM/Ton	TAP 8	0.2	4728.6	742.2	1138.9	1.86
		0.4	4639.0	785.5	1206.3	1.97
		0.6	4544.2	827.5	1258.1	2.07
		0.8	4440.1	872.9	1322.0	2.19
370 CFM/Ton @.6	TAP 9	0.2	4882.7	761.2	1258.8	2.05
		0.4	4780.7	808.8	1332.8	2.18
		0.6	4676.2	849.3	1383.0	2.29
		0.8	4601.1	886.1	1446.1	2.39
370 CFM/Ton a@ .8	TAP 10	0.2	4953.8	770.2	1320.7	2.14
		0.4	4843.5	820.6	1398.2	2.29
		0.6	4732.0	860.6	1447.5	2.40
		0.8	4672.8	892.6	1509.8	2.49

HORIZONTAL

	TAP SPEED	ESP	SCFM	R.P.M.	WATTS	BHP
PL Rated @ 0.15	TAP 1	0.2	2123.9	462.4	190.2	0.26
		0.4	1926.4	534.1	216.4	0.30
		0.6	1608.9	624.8	251.6	0.35
		0.8	1383.2	692.3	281.2	0.39
PL Rated (Max CFM) @ 0.35 ESP	TAP 2	0.2	2446.6	503.3	273.1	0.38
		0.4	2274.7	569.7	300.9	0.43
		0.6	2009.7	649.6	335.1	0.49
		0.8	1810.1	712.6	367.4	0.54
Rated @ .35 ESP	TAP 3	0.2	4258.3	735.7	964.3	1.57
		0.4	4177.4	777.0	1005.3	1.66
		0.6	4102.9	816.0	1051.6	1.74
		0.8	4012.5	858.1	1103.0	1.83
370 CFM/Ton @.6	TAP 4	0.2	4783.8	804.8	1302.3	2.17
		0.4	4696.8	841.6	1349.7	2.27
		0.6	4614.0	881.1	1410.1	2.37
		0.8	4532.3	919.6	1469.6	2.48
370 CFM/Ton @ .8	TAP 5	0.2	4859.8	815.0	1361.9	2.27
		0.4	4769.4	851.3	1410.4	2.37
		0.6	4680.5	891.8	1473.7	2.48
		0.8	4598.2	930.0	1534.6	2.59
320 CFM/Ton	TAP 6	0.2	4258.3	735.7	964.3	1.57
		0.4	4177.4	777.0	1005.3	1.66
		0.6	4102.9	816.0	1051.6	1.74
		0.8	4012.5	858.1	1103.0	1.83
340 CFM/Ton	TAP 7	0.2	4491.7	766.3	1101.0	1.64
		0.4	4411.2	805.2	1144.6	1.72
		0.6	4339.3	843.3	1196.1	1.80
		0.8	4254.9	883.5	1250.9	1.89
350 CFM/Ton	TAP 8	0.2	4621.8	783.4	1185.9	1.96
		0.4	4539.6	821.3	1231.1	2.06
		0.6	4465.1	859.5	1286.2	2.15
		0.8	4382.7	898.9	1343.0	2.25
350 CFM/Ton	TAP 9	0.2	4783.8	804.8	1302.3	2.17
		0.4	4696.8	841.6	1349.7	2.27
		0.6	4614.0	881.1	1410.1	2.37
		0.8	4532.3	919.6	1469.6	2.48
370 CFM/Ton	TAP 10	0.2	4859.8	815.0	1361.9	2.27
		0.4	4769.4	851.3	1410.4	2.37
		0.6	4680.5	891.8	1473.7	2.48
		0.8	4598.2	930.0	1534.6	2.59

APPENDIX A BLOWER PERFORMANCE DATA

12.5 TON AC

12.5T AC Medium Static

Motor 5 HP

Model: DSC150_MED

DOWNSHOT

	TAP SPEED	ESP	SCFM	R.P.M.	WATTS	BHP
PL Rated	TAP 1	0.2	2542.9	482.5	250.6	0.39
		0.4	2344.0	560.9	287.8	0.45
		0.6	2081.8	652.9	336.5	0.53
		0.8	1821.6	727.4	380.9	0.59
		1	1632.0	773.1	404.4	0.63
		1.2	1380.0	832.3	441.0	0.67
		1.4				

	TAP SPEED	ESP	SCFM	R.P.M.	WATTS	BHP
PL CFM Max	TAP 2	0.2	2845.3	516.5	341.6	0.50
		0.4	2659.0	589.2	381.8	0.57
		0.6	2424.9	673.0	431.9	0.65
		0.8	2185.1	743.4	477.3	0.72
		1	2004.3	789.7	507.5	0.77
		1.2	1757.7	849.4	548.8	0.83
		1.4	1538.7	892.5	582.3	0.87

	TAP SPEED	ESP	SCFM	R.P.M.	WATTS	BHP
Rated @ 0.8 ESP	TAP 3	0.2	4522.1	708.7	1010.1	1.46
		0.4	4399.5	753.7	1068.1	1.55
		0.6	4294.7	798.8	1127.0	1.64
		0.8	4157.5	847.9	1183.8	1.74
		1	4026.5	894.8	1247.0	1.84
		1.2	3825.7	951.8	1307.7	1.96
		1.4	3670.5	996.0	1370.1	2.05

	TAP SPEED	ESP	SCFM	R.P.M.	WATTS	BHP
400 CFM/Ton@1.2	TAP 4	0.2	5513.2	828.3	1670.3	2.46
		0.4	5417.8	863.2	1741.4	2.57
		0.6	5346.3	896.4	1806.7	2.66
		0.8	5252.9	935.2	1879.4	2.78
		1	5152.9	977.6	1955.0	2.90
		1.2	5004.6	1024.5	2017.7	3.04
		1.4	4882.6	1065.8	2088.5	3.17

	TAP SPEED	ESP	SCFM	R.P.M.	WATTS	BHP
400 CFM/Ton@1.4	TAP 5	0.2	5616.0	841.3	1765.3	2.60
		0.4	5522.3	875.8	1838.0	2.71
		0.6	5450.0	908.8	1904.1	2.81
		0.8	5359.4	946.8	1979.4	2.93
		1	5262.9	988.2	2055.6	3.06
		1.2	5122.5	1033.3	2117.4	3.20
		1.4	5003.5	1073.9	2188.3	3.32

	TAP SPEED	ESP	SCFM	R.P.M.	WATTS	BHP
320 CFM/Ton	TAP 6	0.2	4880.6	751.1	1211.1	1.76
		0.4	4769.4	791.5	1273.4	1.86
		0.6	4682.8	830.8	1334.5	1.95
		0.8	4563.9	875.9	1395.7	2.06
		1	4443.8	921.8	1464.4	2.16
		1.2	4258.5	976.4	1527.2	2.29
		1.4	4115.9	1020.0	1593.9	2.39

	TAP SPEED	ESP	SCFM	R.P.M.	WATTS	BHP
350 CFM/Ton	TAP 7	0.2	5214.7	791.4	1431.9	2.10
		0.4	5112.7	828.4	1498.7	2.20
		0.6	5037.6	863.5	1561.9	2.29
		0.8	4933.5	905.1	1628.5	2.40
		1	4824.0	949.5	1701.4	2.52
		1.2	4656.1	1000.8	1764.9	2.66
		1.4	4524.8	1043.5	1834.4	2.77

	TAP SPEED	ESP	SCFM	R.P.M.	WATTS	BHP
370 CFM/Ton	TAP 8	0.2	5412.7	815.8	1584.5	2.33
		0.4	5315.3	851.2	1654.1	2.43
		0.6	5243.5	884.8	1718.7	2.53
		0.8	5146.9	924.5	1789.1	2.64
		1	5043.6	967.7	1864.0	2.77
		1.2	4888.2	1016.3	1927.1	2.91
		1.4	4763.2	1058.1	1997.7	3.03

	TAP SPEED	ESP	SCFM	R.P.M.	WATTS	BHP
400 CFM/Ton@1.2	TAP 9	0.2	5513.2	828.3	1670.3	2.46
		0.4	5417.8	863.2	1741.4	2.57
		0.6	5346.3	896.4	1806.7	2.66
		0.8	5252.9	935.2	1879.4	2.78
		1	5152.9	977.6	1955.0	2.90
		1.2	5004.6	1024.5	2017.7	3.04
		1.4	4882.6	1065.8	2088.5	3.17

	TAP SPEED	ESP	SCFM	R.P.M.	WATTS	BHP
400 CFM/Ton@1.4	TAP 10	0.2	5616.0	841.3	1765.3	2.60
		0.4	5522.3	875.8	1838.0	2.71
		0.6	5450.0	908.8	1904.1	2.81
		0.8	5359.4	946.8	1979.4	2.93
		1	5262.9	988.2	2055.6	3.06
		1.2	5122.5	1033.3	2117.4	3.20
		1.4	5003.5	1073.9	2188.3	3.32

HORIZONTAL

	TAP SPEED	ESP	SCFM	R.P.M.	WATTS	BHP
PL Rated	TAP 1	0.2	2459.6	510.2	266.8	0.41
		0.4	2227.6	602.4	321.2	0.49
		0.6	1971.8	686.7	368.4	0.56
		0.8	1804.1	742.3	401.1	0.60
		1	1609.6	796.5	435.1	0.64
		1.2	1394.9	851.7	463.8	0.69
		1.4	1312.7	904.0	476.9	0.73

	TAP SPEED	ESP	SCFM	R.P.M.	WATTS	BHP
PL CFM Max	TAP 2	0.2	2748.2	548.2	365.6	0.53
		0.4	2542.5	631.3	414.5	0.61
		0.6	2310.9	708.7	461.5	0.69
		0.8	2154.8	762.3	497.0	0.74
		1	1962.9	817.1	536.3	0.79
		1.2	1763.2	870.8	569.1	0.85
		1.4	1659.0	924.1	592.8	0.90

	TAP SPEED	ESP	SCFM	R.P.M.	WATTS	BHP
Rated @ 0.8 ESP	TAP 3	0.2	4351.0	763.5	1080.4	1.57
		0.4	4265.6	803.6	1118.9	1.65
		0.6	4152.3	847.3	1168.4	1.74
		0.8	4052.9	889.4	1218.8	1.83
		1	3893.2	941.8	1283.4	1.93
		1.2	3771.8	985.9	1337.6	2.03
		1.4	3590.7	1039.2	1410.8	2.13

	TAP SPEED	ESP	SCFM	R.P.M.	WATTS	BHP
390 CFM/Ton@1.2	TAP 4	0.2	5301.9	897.5	1773.6	2.67
		0.4	5245.6	924.2	1837.8	2.75
		0.6	5177.1	956.0	1895.4	2.84
		0.8	5098.9	990.5	1953.2	2.94
		1	4987.0	1032.7	2026.1	3.07
		1.2	4903.8	1068.6	2090.6	3.18
		1.4	4750.2	1112.7	2178.5	3.31

	TAP SPEED	ESP	SCFM	R.P.M.	WATTS	BHP
390 CFM/Ton@1.4	TAP 5	0.2	5400.9	912.0	1872.6	2.82
		0.4	5343.4	938.6	1942.6	2.90
		0.6	5277.0	970.0	2001.7	3.00
		0.8	5199.8	1003.6	2060.2	3.11
		1	5095.7	1043.9	2133.3	3.23
		1.2	5015.7	1078.6	2198.6	3.34
		1.4	4872.3	1120.8	2286.6	3.47

	TAP SPEED	ESP	SCFM	R.P.M.	WATTS	BHP
320 CFM/Ton	TAP 6	0.2	4694.5	811.0	1292.5	1.90
		0.4	4625.6	844.5	1335.7	1.98
		0.6	4532.2	882.8	1387.2	2.07
		0.8	4442.2	922.2	1440.5	2.16
		1	4295.6	972.2	1509.1	2.28
		1.2	4189.2	1013.7	1567.3	2.38
		1.4	4007.6	1065.0	1647.9	2.50

	TAP SPEED	ESP	SCFM	R.P.M.	WATTS	BHP
350 CFM/Ton	TAP 7	0.2	5015.0	856.1	1524.5	2.27
		0.4	4956.2	885.1	1576.2	2.35
		0.6	4878.0	919.3	1630.4	2.44
		0.8	4795.2	956.2	1686.2	2.54
		1	4664.6	1002.8	1757.6	2.66
		1.2	4571.1	1041.5	1819.3	2.76
		1.4	4398.4	1089.8	1904.9	2.89

	TAP SPEED	ESP	SCFM	R.P.M.	WATTS	BHP
370 CFM/Ton	TAP 8	0.2	5205.3	883.4	1684.1	2.53
		0.4	5149.0	910.6	1743.4	2.60
		0.6	5077.8	943.1	1799.7	2.70
		0.8	4998.3	978.4	1856.9	2.80
		1	4879.4	1022.3	1929.4	2.92
		1.2	4793.0	1059.2	1993.0	3.03
		1.4	4631.4	1104.8	2080.5	3.16

	TAP SPEED	ESP	SCFM	R.P.M.	WATTS	BHP
400 CFM/Ton@1.2	TAP 9	0.2	5301.9	897.5	1773.6	2.67
		0.4	5245.6	924.2	1837.8	2.75
		0.6	5177.1	956.0	1895.4	2.84
		0.8	5098.9	990.5	1953.2	2.94
		1	4987.0	1032.7	2026.1	3.07
		1.2	4903.8	1068.6	2090.6	3.18
		1.4	4750.2	1112.7	2178.5	3.31

	TAP SPEED	ESP	SCFM	R.P.M.	WATTS	BHP
400 CFM/Ton@1.4	TAP 10	0.2	5400.9	912.0	1872.6	2.82
		0.4	5343.4	938.6	1942.6	2.90
		0.6	5277.0	970.0	2001.7	3.00
		0.8	5199.8	1003.6	2060.2	3.11
		1	5095.7	1043.9	2133.3	3.23
		1.2	5015.7	1078.6	2198.6	3.34
		1.4	4872.3	1120.8	2286.6	3.47

APPENDIX A BLOWER PERFORMANCE DATA

12.5 TON AC

12.5T AC High Static | Motor 5 HP | Model: DSC150_HIGH

DOWNSHOT

	TAP SPEED	ESP	SCFM	R.P.M.	WATTS	BHP
PL Rated	TAP 1	0.2	2752.1	506.0	312.9	0.47
		0.4	2562.0	580.5	352.1	0.53
		0.6				
		0.8				
		1				
		1.2				
		1.4				
		1.6				
		1.8				

	TAP SPEED	ESP	SCFM	R.P.M.	WATTS	BHP
PL Max CFM	TAP 2	0.2	2982.6	532.0	385.2	0.56
		0.4	2802.1	602.2	426.7	0.63
		0.6	2580.4	682.3	477.5	0.72
		0.8				
		1				
		1.2				
		1.4				
		1.6				
		1.8				

	TAP SPEED	ESP	SCFM	R.P.M.	WATTS	BHP
Rated @ 1.2 ESP	TAP 3	0.2	4898.4	753.3	1221.9	1.78
		0.4	4787.7	793.4	1284.5	1.87
		0.6	4701.9	832.5	1345.6	1.97
		0.8	4583.8	877.3	1407.1	2.07
		1	4464.3	923.2	1476.0	2.18
		1.2	4279.7	977.6	1539.0	2.31
		1.4	4137.8	1021.3	1605.8	2.41
		1.6	3911.9	1078.4	1687.3	2.55
		1.8	3739.4	1115.3	1759.9	2.63

	TAP SPEED	ESP	SCFM	R.P.M.	WATTS	BHP
400 CFM/Ton@1.6	TAP 4	0.2	5749.4	858.5	1902.5	2.81
		0.4	5657.5	892.8	1977.4	2.92
		0.6	5581.8	926.1	2044.7	3.03
		0.8	5494.1	963.1	2123.7	3.15
		1	5401.9	1003.1	2200.3	3.28
		1.2	5273.2	1045.3	2260.7	3.42
		1.4	5157.9	1084.9	2331.1	3.55
		1.6	5003.0	1130.1	2422.1	3.69
		1.8	4866.1	1160.0	2499.5	3.79

	TAP SPEED	ESP	SCFM	R.P.M.	WATTS	BHP
400 CFM/Ton@1.8	TAP 5	0.2	5848.6	871.6	2017.8	2.97
		0.4	5757.4	906.0	2094.6	3.09
		0.6	5677.1	940.2	2162.7	3.21
		0.8	5590.5	976.6	2245.0	3.33
		1	5501.8	1015.2	2321.5	3.46
		1.2	5383.0	1054.8	2380.3	3.60
		1.4	5270.3	1093.4	2449.9	3.73
		1.6	5132.2	1135.5	2540.9	3.87
		1.8	5003.0	1166.7	2617.8	3.98

	TAP SPEED	ESP	SCFM	R.P.M.	WATTS	BHP
320 CFM/Ton	TAP 6	0.2	5162.1	785.0	1394.5	2.04
		0.4	5058.8	822.4	1460.5	2.14
		0.6	4982.3	858.2	1523.4	2.23
		0.8	4876.1	900.2	1589.0	2.34
		1	4764.8	945.0	1661.3	2.46
		1.2	4593.9	996.8	1724.8	2.59
		1.4	4460.9	1039.7	1794.0	2.71
		1.6	4247.8	1095.2	1879.7	2.85
		1.8	4082.6	1127.6	1954.8	2.93

	TAP SPEED	ESP	SCFM	R.P.M.	WATTS	BHP
350 CFM/Ton	TAP 7	0.2	5459.1	821.6	1623.3	2.39
		0.4	5362.7	856.7	1693.6	2.49
		0.6	5291.2	890.1	1758.6	2.59
		0.8	5196.1	929.4	1830.0	2.70
		1	5094.3	972.2	1905.2	2.83
		1.2	4942.1	1020.1	1968.2	2.97
		1.4	4818.5	1061.6	2038.9	3.09
		1.6	4628.2	1113.4	2128.1	3.24
		1.8	4474.5	1142.9	2205.2	3.33

	TAP SPEED	ESP	SCFM	R.P.M.	WATTS	BHP
370 CFM/Ton	TAP 8	0.2	5652.7	846.0	1801.3	2.66
		0.4	5559.6	880.4	1874.6	2.77
		0.6	5486.7	913.4	1941.1	2.87
		0.8	5396.9	951.1	2017.3	2.99
		1	5301.6	992.2	2093.6	3.12
		1.2	5164.2	1036.5	2155.1	3.26
		1.4	5046.3	1076.9	2225.9	3.38
		1.6	4877.6	1124.7	2316.6	3.53
		1.8	4734.4	1154.0	2394.1	3.62

	TAP SPEED	ESP	SCFM	R.P.M.	WATTS	BHP
400 CFM/Ton@1.6	TAP 9	0.2	5749.4	858.5	1902.5	2.81
		0.4	5657.5	892.8	1977.4	2.92
		0.6	5581.8	926.1	2044.7	3.03
		0.8	5494.1	963.1	2123.7	3.15
		1	5401.9	1003.1	2200.3	3.28
		1.2	5273.2	1045.3	2260.7	3.42
		1.4	5157.9	1084.9	2331.1	3.55
		1.6	5003.0	1130.1	2422.1	3.69
		1.8	4866.1	1160.0	2499.5	3.79

	TAP SPEED	ESP	SCFM	R.P.M.	WATTS	BHP
400 CFM/Ton@1.8	TAP 10	0.2	5848.6	871.6	2017.8	2.97
		0.4	5757.4	906.0	2094.6	3.09
		0.6	5677.1	940.2	2162.7	3.21
		0.8	5590.5	976.6	2245.0	3.33
		1	5501.8	1015.2	2321.5	3.46
		1.2	5383.0	1054.8	2380.3	3.60
		1.4	5270.3	1093.4	2449.9	3.73
		1.6	5132.2	1135.5	2540.9	3.87
		1.8	5003.0	1166.7	2617.8	3.98

HORIZONTAL

	TAP SPEED	ESP	SCFM	R.P.M.	WATTS	BHP
PL Rated	TAP 1	0.2	2659.3	536.5	334.4	0.49
		0.4				
		0.6				
		0.8				
		1				
		1.2				
		1.4				
		1.6				
		1.8				

	TAP SPEED	ESP	SCFM	R.P.M.	WATTS	BHP
PL Max CFM	TAP 2	0.2	2879.4	565.6	412.7	0.59
		0.4	2685.3	644.6	459.5	0.68
		0.6				
		0.8				
		1				
		1.2				
		1.4				
		1.6				
		1.8				

	TAP SPEED	ESP	SCFM	R.P.M.	WATTS	BHP
Rated @ 1.2 ESP	TAP 3	0.2	4711.5	813.4	1303.9	1.92
		0.4	4643.3	846.6	1347.4	2.00
		0.6	4550.8	884.6	1399.1	2.09
		0.8	4461.2	924.0	1452.5	2.18
		1	4315.4	973.8	1521.2	2.30
		1.2	4209.7	1015.2	1579.7	2.40
		1.4	4028.4	1066.3	1660.6	2.52
		1.6	3884.1	1109.0	1726.6	2.62
		1.8	3674.9	1165.8	1810.6	2.75

	TAP SPEED	ESP	SCFM	R.P.M.	WATTS	BHP
390 CFM/Ton@1.6	TAP 4	0.2	5529.6	931.3	2015.3	3.04
		0.4	5468.3	958.3	2094.6	3.13
		0.6	5403.4	989.5	2156.0	3.23
		0.8	5326.8	1022.0	2215.2	3.34
		1	5234.3	1059.3	2288.2	3.46
		1.2	5158.0	1092.4	2354.4	3.57
		1.4	5031.6	1131.7	2441.8	3.70
		1.6	4929.5	1166.2	2510.2	3.81
		1.8	4763.9	1211.7	2594.1	3.96

	TAP SPEED	ESP	SCFM	R.P.M.	WATTS	BHP
390 CFM/Ton@1.8	TAP 5	0.2	5625.4	945.9	2135.0	3.23
		0.4	5559.2	973.9	2222.8	3.32
		0.6	5494.1	1005.4	2286.2	3.43
		0.8	5417.3	1036.9	2345.9	3.54
		1	5335.0	1071.6	2418.4	3.66
		1.2	5261.0	1103.4	2485.3	3.77
		1.4	5150.9	1140.0	2571.4	3.89
		1.6	5054.8	1173.3	2639.0	4.00
		1.8	4907.3	1215.9	2718.5	4.15

	TAP SPEED	ESP	SCFM	R.P.M.	WATTS	BHP
320 CFM/Ton	TAP 6	0.2	4964.5	849.0	1485.2	2.21
		0.4	4904.6	878.5	1535.2	2.29
		0.6	4824.2	913.2	1588.9	2.38
		0.8	4740.4	950.6	1644.3	2.47
		1	4607.0	997.8	1715.4	2.60
		1.2	4511.6	1037.0	1776.6	2.70
		1.4	4336.7	1085.8	1861.5	2.83
		1.6	4204.3	1126.2	1929.5	2.93
		1.8	3994.8	1181.3	2018.2	3.07

	TAP SPEED	ESP	SCFM	R.P.M.	WATTS	BHP
350 CFM/Ton	TAP 7	0.2	5249.9	889.9	1724.6	2.59
		0.4	5193.7	916.8	1786.1	2.67
		0.6	5123.9	949.0	1843.0	2.76
		0.8	5045.0	983.9	1900.5	2.86
		1	4929.2	1027.1	1973.2	2.99
		1.2	4844.3	1063.5	2037.2	3.09
		1.4	4686.3	1108.4	2124.9	3.23
		1.6	4568.3	1146.0	2193.9	3.34
		1.8	4370.9	1197.6	2283.7	3.49

	TAP SPEED	ESP	SCFM	R.P.M.	WATTS	BHP
370 CFM/Ton	TAP 8	0.2	5436.3	917.3	1910.1	2.88
		0.4	5378.0	943.9	1982.5	2.96
		0.6	5312.2	975.2	2042.2	3.06
		0.8	5235.2	1008.5	2100.8	3.17
		1	5134.1	1048.0	2173.9	3.29
		1.2	5055.2	1082.3	2239.5	3.40
		1.4	4916.0	1123.8	2327.4	3.53
		1.6	4808.3	1159.3	2396.3	3.64
		1.8	4629.2	1207.3	2483.2	3.79

	TAP SPEED	ESP	SCFM	R.P.M.	WATTS	BHP
390 CFM/Ton@1.6	TAP 9	0.2	5529.6	931.3	2015.3	3.04
		0.4	5468.3	958.3	2094.6	3.13
		0.6	5403.4	989.5	2156.0	3.23
		0.8	5326.8	1022.0	2215.2	3.34
		1	5234.3	1059.3	2288.2	3.46
		1.2	5158.0	1092.4	2354.4	3.57
		1.4	5031.6	1131.7	2441.8	3.70
		1.6	4929.5	1166.2	2510.2	3.81
		1.8	4763.9	1211.7	2594.1	3.96

	TAP SPEED	ESP	SCFM	R.P.M.	WATTS	BHP
390 CFM/Ton@1.8	TAP 10	0.2	5625.4	945.9	2135.0	3.23
		0.4	5559.2	973.9	2222.8	3.32
		0.6	5494.1	1005.4	2286.2	3.43
		0.8	5417.3	1036.9	2345.9	3.54
		1	5335.0	1071.6	2418.4	3.66
		1.2	5261.0	1103.4	2485.3	3.77
		1.4	5150.9	1140.0	2571.4	3.89
		1.6	5054.8	1173.3	2639.0	4.00
		1.8	4907.3	1215.9	2718.5	4.15

APPENDIX A BLOWER PERFORMANCE DATA
7.5 TON HP

7.5T Heat Pump Standard Static
Models: DSH0903D, DSH0904D, DSH0907D

TAP SPEED	ESP	SCFM	R.P.M.	WATTS	BHP
SPEED 1 (Rated PL 2000 SCFM @ Rated 0.11 esp)	0.2	1974.0	437.7	196.2	0.23
	0.4	1789.0	522.9	223.4	0.27
	0.6				
	0.8				

TAP SPEED	ESP	SCFM	R.P.M.	WATTS	BHP
Speed 2 2000 PL SCFM @ 0.35 esp	0.2	2131.0	458.2	308.0	0.28
	0.4	1969.0	531.2	340.4	0.32
	0.6	1782.0	615.5	386.4	0.38
	0.8				

TAP SPEED	ESP	SCFM	R.P.M.	WATTS	BHP
Speed 3 3000 FL SCFM @ 0.25 esp	0.2	3072.0	567.1	485.8	0.69
	0.4	2947.0	627.9	528.3	0.76
	0.6	2837.0	684.3	571.0	0.83
	0.8	2695.0	737.0	607.0	0.89

TAP SPEED	ESP	SCFM	R.P.M.	WATTS	BHP
SPEED 4 3000 SCFM @ 0.6 esp	0.2	3307.1	839.6	764.0	1.17
	0.4	3215.9	896.8	811.0	1.25
	0.6	3118.9	951.2	865.0	1.33
	0.8	3014.0	1005.4	919.6	1.40

TAP SPEED	ESP	SCFM	R.P.M.	WATTS	BHP
SPEED 5 (3000 SCFM @ 0.8 esp)	0.2	3370.3	796.1	929.1	1.17
	0.4	3289.3	851.5	997.5	1.25
	0.6	3201.5	905.3	1054.0	1.33
	0.8	3070.0	958.0	1112.0	1.40

TAP SPEED	ESP	SCFM	R.P.M.	WATTS	BHP
SPEED 6 (2400 SCFM @ 0.2 esp)	0.2	2411.0	487.6	286.0	0.37
	0.4				
	0.6				
	0.8				

TAP SPEED	ESP	SCFM	R.P.M.	WATTS	BHP
SPEED 7 (2400 SCFM @ 0.6 esp)	0.2	2666.0	518.4	348.4	0.48
	0.4	2531.0	582.8	385.1	0.54
	0.6	2393.0	646.9	423.0	0.59
	0.8	2231.0	711.9	459.9	0.65

TAP SPEED	ESP	SCFM	R.P.M.	WATTS	BHP
SPEED 8 (2400 SCFM @ 0.8 esp)	0.2	2798.0	532.6	383.6	0.53
	0.4	2658.0	596.0	420.4	0.60
	0.6	2530.0	654.0	446.5	0.66
	0.8	2377.0	716.9	498.0	0.72

TAP SPEED	ESP	SCFM	R.P.M.	WATTS	BHP
SPEED 9 3000 SCFM @ 0.6 esp	0.2	3307.1	839.6	764.0	1.35
	0.4	3215.9	896.8	811.0	1.44
	0.6	3118.9	951.2	865.0	1.53
	0.8	3014.0	1005.4	919.6	1.61

TAP SPEED	ESP	SCFM	R.P.M.	WATTS	BHP
SPEED 10 (3000 SCFM @ 0.8 esp)	0.2	3370.3	796.1	929.1	1.34
	0.4	3289.3	851.5	997.5	1.43
	0.6	3201.5	905.3	1054.0	1.52
	0.8	3070.0	958.0	1112.0	1.61

7.5T Heat Pump Standard Static Horizontal
Models: DSH0903D, DSH0904D, DSH0907D

TAP SPEED	ESP	SCFM	R.P.M.	WATTS	BHP
SPEED 1 (Rated PL 2000 SCFM @ Rated 0.11 esp)	0.2	1928.0	448.7	158.1	0.24
	0.4	1774.0	534.6	196.1	0.28
	0.6				
	0.8				

TAP SPEED	ESP	SCFM	R.P.M.	WATTS	BHP
Speed 2 2000 PL SCFM @ 0.35 esp	0.2	2140.7	486.4	308.3	0.30
	0.4	1978.4	555.8	386.8	0.34
	0.6	1789.8	638.6	433.8	0.39
	0.8				

TAP SPEED	ESP	SCFM	R.P.M.	WATTS	BHP
Speed 3 3000 FL SCFM @ 0.25 esp	0.2	3031.0	594.0	431.6	0.72
	0.4	2909.0	649.0	474.6	0.79
	0.6	2799.0	699.1	512.1	0.85
	0.8	2682.0	748.7	539.7	0.91

TAP SPEED	ESP	SCFM	R.P.M.	WATTS	BHP
SPEED 4 3000 SCFM @ 0.6 esp	0.2	3251.0	849.4	775.2	1.18
	0.4	3141.0	905.9	869.4	1.26
	0.6	3035.0	960.9	882.9	1.34
	0.8	2930.0	1016.9	934.7	1.42

TAP SPEED	ESP	SCFM	R.P.M.	WATTS	BHP
SPEED 5 (3000 SCFM @ 0.8 esp)	0.2	3335.2	807.2	921.7	1.18
	0.4	3228.6	861.0	934.2	1.26
	0.6	3124.6	914.4	1042.2	1.34
	0.8	3022.3	967.8	1102.1	1.42

TAP SPEED	ESP	SCFM	R.P.M.	WATTS	BHP
SPEED 6 (2400 SCFM @ 0.2 esp)	0.2	2375.0	500.4	254.3	0.38
	0.4				
	0.6				
	0.8				

TAP SPEED	ESP	SCFM	R.P.M.	WATTS	BHP
SPEED 7 (2400 SCFM @ 0.6 esp)	0.2	2636.0	533.9	327.7	0.49
	0.4	2506.0	593.8	351.9	0.55
	0.6	2379.0	652.1	379.0	0.60
	0.8				

TAP SPEED	ESP	SCFM	R.P.M.	WATTS	BHP
SPEED 8 (2400 SCFM @ 0.8 esp)	0.2	2757.0	548.9	336.4	0.55
	0.4	2637.0	606.5	372.5	0.61
	0.6	2509.0	659.9	401.9	0.66
	0.8	2377.0	722.6	435.8	0.73

TAP SPEED	ESP	SCFM	R.P.M.	WATTS	BHP
SPEED 9 3000 SCFM @ 0.6 esp	0.2	3251.0	849.4	775.2	1.18
	0.4	3141.0	905.9	869.4	1.26
	0.6	3035.0	960.9	882.9	1.34
	0.8	2930.0	1016.9	934.7	1.42

TAP SPEED	ESP	SCFM	R.P.M.	WATTS	BHP
SPEED 10 (3000 SCFM @ 0.8 esp)	0.2	3335.2	807.2	921.7	1.18
	0.4	3228.6	861.0	934.2	1.26
	0.6	3124.6	914.4	1042.2	1.34
	0.8	3022.3	967.8	1102.1	1.42

APPENDIX A BLOWER PERFORMANCE DATA
7.5 TON HP

7.5T Heat Pump Medium Static Downshot
Models: DSH0903L, DSH0904L, DSH0907L

TAP SPEED	ESP	SCFM	R.P.M.	WATTS	BHP
SPEED 1 Rated PL (2000cfm @ 0.48 esp)	0.2	2298.0	473.0	255.6	0.33
	0.4	2147.0	548.8	284.0	0.39
	0.6	1967.0	619.3	322.2	0.44
	0.8	1637.0	732.4	375.8	0.52
	1				
	1.2				
	1.4				

TAP SPEED	ESP	SCFM	R.P.M.	WATTS	BHP
SPEED 2 Rated PL (2000 cfm @ 0.62 esp)	0.2	2345.0	476.2	273.1	0.34
	0.4	2187.0	548.6	300.3	0.39
	0.6	2019.0	620.9	322.6	0.45
	0.8	1686.0	730.8	378.8	0.53
	1	1496.0	789.7	404.8	0.57
	1.2				
	1.4				

TAP SPEED	ESP	SCFM	R.P.M.	WATTS	BHP
SPEED 3 Rated FL (3000 cfm @ 1.1 esp)	0.2	3538.0	619.4	634.4	0.97
	0.4	3413.0	671.7	698.6	1.06
	0.6	3301.0	723.3	739.6	1.14
	0.8	3201.0	769.8	785.9	1.21
	1	3070.0	818.6	808.9	1.29
	1.2	2960.0	870.0	858.4	1.37
	1.4	2839.0	922.4	928.8	1.45

TAP SPEED	ESP	SCFM	R.P.M.	WATTS	BHP
SPEED 4 Rated FL (400 cfm/ton @ 1.2 esp)	0.2	3883.7	709.7	706.7	1.16
	0.4	3720.6	765.0	770.5	1.25
	0.6	3582.4	816.0	825.5	1.33
	0.8	3459.8	864.8	872.0	1.41
	1	3334.0	918.2	928.1	1.50
	1.2	3070.0	984.4	967.9	1.60
	1.4	3053.4	1052.7	1012.0	1.72

TAP SPEED	ESP	SCFM	R.P.M.	WATTS	BHP
SPEED 5 (400 cfm/ton @ 1.4 esp)	0.2	3711.0	638.4	706.7	1.11
	0.4	3592.0	690.8	770.5	1.20
	0.6	3489.0	740.4	825.5	1.28
	0.8	3391.0	786.4	872.0	1.36
	1	3295.0	835.3	928.1	1.45
	1.2	3178.0	881.6	967.9	1.53
	1.4	2990.0	928.7	1012.0	1.61

TAP SPEED	ESP	SCFM	R.P.M.	WATTS	BHP
SPEED 6 (2400 SCFM @ 1.1 esp)	0.2	3027.0	554.4	534.4	0.64
	0.4	2895.0	613.6	586.5	0.71
	0.6	2786.0	670.2	638.9	0.77
	0.8	2657.0	725.3	681.9	0.84
	1	2500.0	784.0	723.1	0.91
	1.2				
	1.4				

TAP SPEED	ESP	SCFM	R.P.M.	WATTS	BHP
SPEED 7 (2400 SCFM @ 1.4 esp)	0.2	3307.0	587.3	441.3	0.81
	0.4	3170.0	643.9	499.0	0.88
	0.6	3063.0	697.5	536.3	0.96
	0.8	2946.0	747.3	579.3	1.03
	1	2816.0	801.2	622.0	1.10
	1.2	2678.0	855.6	688.1	1.18
	1.4	2403.0	940.6	721.4	1.29

TAP SPEED	ESP	SCFM	R.P.M.	WATTS	BHP
SPEED 8 Rated FL (3000 cfm @ 1.1 esp)	0.2	3538.0	619.4	706.7	0.97
	0.4	3413.0	671.7	770.5	1.06
	0.6	3301.0	723.3	825.5	1.14
	0.8	3201.0	769.8	872.0	1.21
	1	3070.0	818.6	928.1	1.29
	1.2	2960.0	870.0	967.9	1.37
	1.4	2839.0	922.4	1012.0	1.45

TAP SPEED	ESP	SCFM	R.P.M.	WATTS	BHP
SPEED 9 Rated FL (400 cfm/ton @ 1.2 esp)	0.2	3883.7	709.7	706.7	1.16
	0.4	3720.6	765.0	770.5	1.25
	0.6	3582.4	816.0	825.5	1.33
	0.8	3459.8	864.8	872.0	1.41
	1	3334.0	918.2	928.1	1.50
	1.2	3188.9	984.4	967.9	1.60
	1.4	3051.0	1052.7	1012.0	1.72

TAP SPEED	ESP	SCFM	R.P.M.	WATTS	BHP
SPEED 10 (400 cfm/ton @ 1.4 esp)	0.2	3711.0	638.4	706.7	1.26
	0.4	3592.0	690.8	770.5	1.36
	0.6	3489.0	740.4	825.5	1.46
	0.8	3391.0	786.4	872.0	1.55
	1	3295.0	835.3	928.1	1.65
	1.2	3178.0	881.6	967.9	1.74
	1.4	3051.0	928.7	1012.0	1.83

7.5T Heat Pump Medium Static Horizontal
Models: DSH0903L, DSH0904L, DSH0907L

TAP SPEED	ESP	SCFM	R.P.M.	WATTS	BHP
SPEED 1 Rated PL (2000cfm @ 0.48 esp)	0.2	2284.0	494.2	239.7	0.35
	0.4	2135.0	561.5	262.8	0.40
	0.6	1976.0	632.2	287.3	0.45
	0.8	1626.0	742.9	340.9	0.52
	1				
	1.2				
	1.4				

TAP SPEED	ESP	SCFM	R.P.M.	WATTS	BHP
SPEED 2 Rated PL (2000 cfm @ 0.62 esp)	0.2	2304.0	496.8	242.1	0.36
	0.4	2152.0	562.2	266.0	0.40
	0.6	1998.0	633.8	303.5	0.46
	0.8	1646.0	746.2	350.1	0.54
	1				
	1.2				
	1.4				

TAP SPEED	ESP	SCFM	R.P.M.	WATTS	BHP
SPEED 3 Rated FL (3000 cfm @ 1.1 esp)	0.2	3466.0	652.4	616.3	1.03
	0.4	3361.0	700.7	669.9	1.10
	0.6	3261.0	744.3	712.3	1.17
	0.8	3176.0	789.9	745.2	1.24
	1	3058.0	836.8	774.6	1.32
	1.2	2952.0	884.9	828.0	1.39
	1.4	2816.0	943.0	880.9	1.48

TAP SPEED	ESP	SCFM	R.P.M.	WATTS	BHP
SPEED 4 Rated FL (400 cfm/ton @ 1.2 esp)	0.2	3601.0	676.9	696.5	1.10
	0.4	3478.0	736.3	736.3	1.20
	0.6	3370.0	789.7	774.8	1.29
	0.8	3271.0	839.6	811.2	1.37
	1	3166.0	893.2	846.9	1.46
	1.2	3010.0	958.2	888.2	1.56
	1.4	2917.0	1023.5	946.8	1.67

TAP SPEED	ESP	SCFM	R.P.M.	WATTS	BHP
SPEED 5 (400 cfm/ton @ 1.4 esp)	0.2	3622.0	675.9	696.5	1.17
	0.4	3530.0	722.6	736.3	1.25
	0.6	3432.0	766.2	774.8	1.33
	0.8	3341.0	809.8	811.2	1.40
	1	3251.0	851.6	846.9	1.48
	1.2	3144.0	897.7	888.2	1.56
	1.4	3006.0	946.9	946.8	1.64

TAP SPEED	ESP	SCFM	R.P.M.	WATTS	BHP
SPEED 6 (2400 SCFM @ 1.1 esp)	0.2	2983.0	581.7	425.6	0.67
	0.4	2864.0	635.0	451.5	0.73
	0.6	2749.0	687.0	494.1	0.79
	0.8	2630.0	739.6	521.6	0.85
	1	2492.0	800.6	559.4	0.93
	1.2				
	1.4				

TAP SPEED	ESP	SCFM	R.P.M.	WATTS	BHP
SPEED 7 (2400 SCFM @ 1.4 esp)	0.2	3230.0	616.6	522.7	0.83
	0.4	3112.0	666.5	599.4	0.90
	0.6	3005.0	715.7	682.9	0.97
	0.8	2905.0	761.2	630.9	1.03
	1	2801.0	817.1	682.9	1.10
	1.2	2673.0	871.8	727.6	1.18
	1.4	2325.0	978.2	786.1	1.32

TAP SPEED	ESP	SCFM	R.P.M.	WATTS	BHP
SPEED 8 Rated FL (3000 cfm @ 1.1 esp)	0.2	3466.0	652.4	616.3	1.03
	0.4	3361.0	700.7	669.9	1.10
	0.6	3261.0	744.3	712.3	1.17
	0.8	3176.0	789.9	745.2	1.24
	1	3058.0	836.8	774.6	1.32
	1.2	2952.0	884.9	828.0	1.39
	1.4	2816.0	943.0	880.9	1.48

TAP SPEED	ESP	SCFM	R.P.M.	WATTS	BHP
SPEED 9 Rated FL (400 cfm/ton @ 1.2 esp)	0.2	3601.0	676.9	696.5	1.10
	0.4	3478.0	736.3	736.3	1.20
	0.6	3370.0	789.7	774.8	1.29
	0.8	3271.0	839.6	811.2	1.37
	1	3166.0	893.2	846.9	1.46
	1.2	3040.0	958.2	888.2	1.56
	1.4	3917.0	1023.5	946.8	1.67

TAP SPEED	ESP	SCFM	R.P.M.	WATTS	BHP
SPEED 10 (400 cfm/ton @ 1.4 esp)	0.2	3622.0	675.9	696.5	1.17
	0.4	3530.0	722.6	736.3	1.25
	0.6	3432.0	766.2	774.8	1.33
	0.8	3341.0	809.8	811.2	1.40
	1	3251.0	851.6	846.9	1.48
	1.2	3144.0	897.7	888.2	1.56
	1.4	3006.0	946.9	946.8	1.64

APPENDIX A BLOWER PERFORMANCE DATA
7.5 TON HP

7.5T Heat Pump High Static Downshot
Models: DSH0903W, DSH0904W, DSH0907W

Tap Speed	ESP	SCFM	R.P.M.	WATTS	BHP
SPEED 1 (2000 SCFM PL @ 0.71 esp)	0.2	2465.0	489.8	281.4	0.36
	0.4	2293.0	560.6	315.7	0.42
	0.6	2148.0	625.7	346.3	0.46
	0.8	1911.0	714.6	394.2	0.53
	1	1614.0	796.5	432.8	0.59
	1.2				
	1.4				
	1.6				
	1.8				

TAP SPEED	ESP	SCFM	R.P.M.	WATTS	BHP
SPEED 2 (2000 scfm pl @ 0.8 esp)	0.2	2465.0	499.1	290.0	0.38
	0.4	2325.0	567.1	229.6	0.44
	0.6	2182.0	632.1	229.6	0.49
	0.8	1993.0	704.9	389.7	0.54
	1	1659.0	803.8	449.3	0.62
	1.2	1498.0	852.6	475.1	0.66
	1.4				
	1.6				
	1.8				

TAP SPEED	ESP	SCFM	R.P.M.	WATTS	BHP
SPEED 3 (FL 3000 scfm @ 1.4 esp)	0.2	3657.1	555.9	766.4	0.93
	0.4	3558.5	615.9	826.8	1.03
	0.6	3466.8	668.7	882.3	1.12
	0.8	3391.2	709.5	934.6	1.19
	1	3289.9	761.3	981.7	1.27
	1.2	3175.7	816.1	1015.0	1.36
	1.4	3058.5	867.8	1069.0	1.45
	1.6	2887.6	936.7	1115.0	1.57
	1.8	2784.5	974.6	1178.0	1.63

TAP SPEED	ESP	SCFM	R.P.M.	WATTS	BHP
SPEED 4 (FL 3000 scfm @ 1.6 esp)	0.2	3748.4	664.2	842.1	1.16
	0.4	3637.4	711.4	887.8	1.24
	0.6	3538.8	756.4	948.5	1.32
	0.8	3448.4	803.0	994.7	1.40
	1	3339.0	846.7	1044.0	1.48
	1.2	3225.7	893.1	1084.0	1.56
	1.4	3108.4	946.7	1117.0	1.65
	1.6	3001.0	999.3	1162.0	1.74
	1.8	2840.3	1041.1	1217.0	1.82

TAP SPEED	ESP	SCFM	R.P.M.	WATTS	BHP
SPEED 5 (FL 3000 scfm @ 1.8 esp)	0.2	3849.9	674.4	1268.0	1.25
	0.4	3745.3	723.3	1341.0	1.34
	0.6	3654.6	770.1	1390.0	1.43
	0.8	3545.5	815.4	1458.0	1.51
	1	3445.4	858.4	1516.0	1.59
	1.2	3359.0	901.8	1561.0	1.67
	1.4	3241.8	945.0	1589.0	1.75
	1.6	3120.1	991.3	1659.0	1.84
	1.8	3001.0	1041.6	1692.0	1.93

TAP SPEED	ESP	SCFM	R.P.M.	WATTS	BHP
SPEED 6 (FL 2400 scfm @ 1.6 esp)	0.2	3502.0	617.5	628.4	0.90
	0.4	3381.0	669.0	677.7	0.97
	0.6	3533.0	721.1	720.7	1.05
	0.8	3145.0	767.0	770.5	1.12
	1	3047.0	816.6	811.2	1.19
	1.2	2908.0	866.1	866.1	1.26
	1.4	2766.0	917.5	891.3	1.34
	1.6	2491.0	1010.0	977.9	1.47
	1.8				

TAP SPEED	ESP	SCFM	R.P.M.	WATTS	BHP
SPEED 7 (FL 2400 scfm @ 1.8 esp)	0.2	3670.0	637.4	709.0	1.02
	0.4	3542.0	685.9	742.2	1.10
	0.6	3430.0	737.0	794.7	1.18
	0.8	3312.0	785.0	785.0	1.25
	1	3207.0	832.4	881.4	1.33
	1.2	3098.0	877.9	924.1	1.40
	1.4	2965.0	928.2	976.7	1.48
	1.6	2829.0	982.3	1005.0	1.57
	1.8	2544.0	1070.0	1096.0	1.71

TAP SPEED	ESP	SCFM	R.P.M.	WATTS	BHP
SPEED 8 (FL 3000 scfm @ 1.4 esp)	0.2	3657.1	555.9	842.1	0.93
	0.4	3558.5	615.9	887.8	1.03
	0.6	3466.8	668.7	948.5	1.12
	0.8	3391.2	709.5	994.7	1.19
	1	3289.9	761.3	1044.0	1.27
	1.2	3175.7	816.1	1084.0	1.36
	1.4	3058.5	867.8	1117.0	1.45
	1.6	2887.6	936.7	1162.0	1.57
	1.8	2784.5	974.6	1217.0	1.63

TAP SPEED	ESP	SCFM	R.P.M.	WATTS	BHP
SPEED 9 (FL 3000 scfm @ 1.6 esp)	0.2	3748.4	664.2	1007.0	1.42
	0.4	3637.4	711.4	1057.0	1.52
	0.6	3538.8	756.4	1125.0	1.62
	0.8	3448.4	803.0	1181.0	1.72
	1	3339.0	846.7	1250.0	1.81
	1.2	3225.7	893.1	1301.0	1.91
	1.4	3108.4	946.7	1350.0	2.03
	1.6	3001.0	999.3	1390.0	2.14
	1.8	2840.3	1041.1	1437.0	2.23

TAP SPEED	ESP	SCFM	R.P.M.	WATTS	BHP
SPEED 10 (FL 3000 scfm @ 1.8 esp)	0.2	3849.9	674.4	1268.0	1.98
	0.4	3745.3	723.3	1341.0	2.12
	0.6	3654.6	770.1	1390.0	2.26
	0.8	3545.5	815.4	1458.0	2.39
	1	3445.4	858.4	1516.0	2.52
	1.2	3359.0	901.8	1561.0	2.65
	1.4	3241.8	945.0	1589.0	2.77
	1.6	3120.1	991.3	1659.0	2.91
	1.8	3001.0	1041.6	1692.0	3.06

7.5T Heat Pump High Static Horizontal
Models: DSH0903W, DSH0904W, DSH0907W

TAP SPEED	ESP	SCFM	R.P.M.	WATTS	BHP
SPEED 1 (2000 SCFM PL @ 0.71 esp)	0.2	2368.0	509.9	258.7	0.38
	0.4	2247.0	571.5	296.8	0.42
	0.6	2113.0	631.5	310.5	0.47
	0.8	1961.0	704.4	352.4	0.52
	1	1600.0	801.9	397.2	0.60
	1.2				
	1.4				
	1.6				
	1.8				

TAP SPEED	ESP	SCFM	R.P.M.	WATTS	BHP
SPEED 2 (2000 scfm pl @ 0.8 esp)	0.2	2449.0	504.1	256.9	0.39
	0.4	2330.0	570.5	294.8	0.44
	0.6	2181.0	638.0	323.6	0.49
	0.8	1991.0	58.9	358.2	0.05
	1	1645.0	34.8	405.8	0.03
	1.2				
	1.4				
	1.6				
	1.8				

TAP SPEED	ESP	SCFM	R.P.M.	WATTS	BHP
SPEED 3 (FL 3000 scfm @ 1.4 esp)	0.2	3638.0	587.3	717.4	0.98
	0.4	3533.0	642.1	754.9	1.07
	0.6	3437.0	690.7	805.1	1.15
	0.8	3359.0	728.5	846.4	1.22
	1	3256.0	776.6	888.1	1.30
	1.2	3142.0	827.8	914.2	1.38
	1.4	3027.0	876.3	965.5	1.46
	1.6	2863.0	941.4	1023.0	1.57
	1.8	2766.0	977.4	1075.0	1.63

TAP SPEED	ESP	SCFM	R.P.M.	WATTS	BHP
SPEED 4 (FL 3000 scfm @ 1.6 esp)	0.2	3711.0	686.6	717.4	1.20
	0.4	3608.0	730.2	754.9	1.27
	0.6	3517.0	772.0	805.1	1.35
	0.8	3434.0	815.5	846.4	1.42
	1	3334.0	856.4	888.1	1.49
	1.2	3231.0	900.1	914.2	1.57
	1.4	3125.0	950.9	965.5	1.66
	1.6	2986.0	1001.0	1023.0	1.75
	1.8	2885.0	1041.0	1075.0	1.82

TAP SPEED	ESP	SCFM	R.P.M.	WATTS	BHP
SPEED 5 (FL 3000 scfm @ 1.8 esp)	0.2	3805.7	696.0	723.3	1.29
	0.4	3708.1	741.2	764.2	1.38
	0.6	3623.9	784.7	804.4	1.46
	0.8	3523.2	827.0	844.1	1.54
	1	3431.2	867.4	882.8	1.61
	1.2	3352.2	908.3	922.6	1.69
	1.4	3245.6	949.3	963.1	1.76
	1.6	3135.6	993.3	1007.4	1.84
	1.8	2989.4	1041.5	1056.7	1.93

TAP SPEED	ESP	SCFM	R.P.M.	WATTS	BHP
SPEED 6 (FL 2400 scfm @ 1.6 esp)	0.2	3383.0	644.4	590.6	0.94
	0.4	3283.0	692.1	632.8	1.01
	0.6	3167.0	738.4	669.5	1.08
	0.8	3076.0	784.6	702.7	1.14
	1	2977.0	826.9	733.0	1.21
	1.2	2849.0	882.6	775.4	1.29
	1.4	2670.0	950.1	875.7	1.38
	1.6	2404.0	1034.0	929.6	1.51
	1.8				

TAP SPEED	ESP	SCFM	R.P.M.	WATTS	BHP
SPEED 7 (FL 2400 scfm @ 1.8 esp)	0.2	3521.0	665.0	668.2	1.06
	0.4	3422.0	712.9	695.6	1.14
	0.6	3325.0	755.9	740.2	1.21
	0.8	3217.0	801.5	768.8	1.28
	1	3122.0	846.2	825.7	1.35
	1.2	3027.0	870.9	870.9	1.39
	1.4	2893.0	947.5	907.7	1.51
	1.6	2762.0	998.8	953.2	1.59
	1.8	2390.0	1100.0	1056.0	1.76

TAP SPEED	ESP	SCFM	R.P.M.	WATTS	BHP
SPEED 8 (FL 3000 scfm @ 1.4 esp)	0.2	3711.0	686.6	717.4	1.15
	0.4	3608.0	730.2	754.9	1.22
	0.6	3517.0	772.0	805.1	1.29
	0.8	3434.0	815.5	846.4	1.36
	1	3334.0	856.4	888.1	1.43
	1.2	3231.0	900.1	914.2	1.50
	1.4	3125.0	950.9	965.5	1.59
	1.6	2986.0	1001.0	1023.0	1.67
	1.8	2885.0	1041.0	1075.0	1.74

TAP SPEED	ESP	SCFM	R.P.M.	WATTS	BHP
SPEED 9 (FL 3000 scfm @ 1.6 esp)	0.2	3711.0	686.6	717.4	1.20
	0.4	3608.0	730.2	754.9	1.27
	0.6	3517.0	772.0	805.1	1.35
	0.8	3434.0	815.5	846.4	1.42
	1	3334.0	856.4	888.1	1.49
	1.2	3231.0	900.1	914.2	1.57
	1.4	3125.0	950.9	965.5	1.66
	1.6	2986.0	1001.0	1023.0	1.75
	1.8	2885.0	1041.0	1075.0	1.82

TAP SPEED	ESP	SCFM	R.P.M.	WATTS	BHP
SPEED 10 (FL 3000 scfm @ 1.8 esp)	0.2	3805.7	696.0	723.3	1.29
	0.4	3708.1	741.2	764.2	1.38
	0.6	3623.9	784.7	804.4	1.46
	0.8	3523.2	827.0	844.1	1.54
	1	3431.2	867.4	882.8	1.61
	1.2	3352.2	908.3	922.6	1.69
	1.4	3245.6	949.3	963.1	1.76
	1.6	3135.6	993.3	1007.4	1.84
	1.8	2989.4	1041.5	1056.7	1.93

APPENDIX A BLOWER PERFORMANCE DATA
8.5 TON HP

8.5T Heat Pump Standard Static Downshot
Models: DSH1023D, DSH1024D, DSH1027D

TAP SPEED	ESP	SCFM	R.P.M.	WATTS	BHP
SPEED 1 (Rated PL 2000 SCFM @ Rated 0.11 esp)	0.2	1974.0	437.7	196.2	0.23
	0.4	1789.0	522.9	223.4	0.27
	0.6				
	0.8				

TAP SPEED	ESP	SCFM	R.P.M.	WATTS	BHP
Speed 2 2000 PL SCFM @ 0.35 esp	0.2	2131.0	458.2	308.0	0.28
	0.4	1969.0	531.2	340.4	0.32
	0.6	1782.0	615.5	386.4	0.38
	0.8				

TAP SPEED	ESP	SCFM	R.P.M.	WATTS	BHP
SPEED 3 (Rated FL 3000 CFM @ Rated esp 0.25)	0.2	3072.0	567.1	485.8	0.69
	0.4	2947.0	627.9	528.3	0.76
	0.6	2837.0	684.3	571.0	0.83
	0.8	2695.0	737.0	607.0	0.89

TAP SPEED	ESP	SCFM	R.P.M.	WATTS	BHP
SPEED 4 (400 cfm/ton @ 0.6 esp)	0.2	3711.0	638.4	929.1	1.09
	0.4	3592.0	690.8	997.5	1.18
	0.6	3430.0	740.4	1054.0	1.26
	0.8	3391.0	786.4	1112.0	1.34

TAP SPEED	ESP	SCFM	R.P.M.	WATTS	BHP
SPEED 5 (400 cfm/ton @ 0.8 esp)	0.2	3737.0	650.7	929.1	1.16
	0.4	3623.0	703.1	997.5	1.25
	0.6	3513.0	751.2	1054.0	1.34
	0.8	3410.0	798.5	1112.0	1.42

TAP SPEED	ESP	SCFM	R.P.M.	WATTS	BHP
SPEED 6 (2700 SCFM @ 0.2 esp)	0.2	2708.0	521.1	353.1	0.49
	0.4				
	0.6				
	0.8				

TAP SPEED	ESP	SCFM	R.P.M.	WATTS	BHP
SPEED 7 (2700 SCFM @ 0.6 esp)	0.2	2955.0	550.5	432.2	0.62
	0.4	2819.0	611.6	464.0	0.68
	0.6	2715.0	668.0	512.8	0.75
	0.8				

TAP SPEED	ESP	SCFM	R.P.M.	WATTS	BHP
SPEED 8 (2700 SCFM @ 0.8 esp)	0.2	3072.0	567.1	432.2	0.69
	0.4	2947.0	627.9	464.0	0.76
	0.6	2837.0	684.3	512.8	0.83
	0.8	2695.0	737.0	554.3	0.89

TAP SPEED	ESP	SCFM	R.P.M.	WATTS	BHP
SPEED 9 (400 cfm/ton @ 0.6 esp)	0.2	3711.0	638.4	929.1	1.09
	0.4	3592.0	690.8	997.5	1.18
	0.6	3430.0	740.4	1054.0	1.26
	0.8	3391.0	786.4	1112.0	1.34

TAP SPEED	ESP	SCFM	R.P.M.	WATTS	BHP
SPEED 10 (400 cfm/ton @ 0.8 esp)	0.2	3737.0	650.7	929.1	1.16
	0.4	3623.0	703.1	997.5	1.25
	0.6	3513.0	751.2	1054.0	1.34
	0.8	3410.0	798.5	1112.0	1.42

8.5T Heat Pump Standard Static Horizontal
Models: DSH1023D, DSH1024D, DSH1027D

TAP SPEED	ESP	SCFM	R.P.M.	WATTS	BHP
SPEED 1 (Rated PL 2000 SCFM @ Rated 0.11 esp)	0.2	1928.0	448.7	158.1	0.24
	0.4	1774.0	534.6	196.1	0.28
	0.6				
	0.8				

TAP SPEED	ESP	SCFM	R.P.M.	WATTS	BHP
Speed 2 2000 PL SCFM @ 0.35 esp	0.2	2140.7	486.4	308.3	0.30
	0.4	1978.4	555.8	386.8	0.34
	0.6	1789.8	638.6	433.8	0.39
	0.8				

TAP SPEED	ESP	SCFM	R.P.M.	WATTS	BHP
SPEED 3 (Rated FL 3000 CFM @ Rated esp 0.25)	0.2	3031.0	594.0	431.6	0.72
	0.4	2909.0	649.0	474.6	0.79
	0.6	2799.0	699.1	512.1	0.85
	0.8	2682.0	748.7	539.7	0.91

TAP SPEED	ESP	SCFM	R.P.M.	WATTS	BHP
SPEED 4 (400 cfm/ton @ 0.6 esp)	0.2	3600.5	677.1	886.9	1.15
	0.4	3503.5	724.1	964.7	1.23
	0.6	3404.7	772.6	998.6	1.31
	0.8	3310.9	819.3	1029.6	1.39

TAP SPEED	ESP	SCFM	R.P.M.	WATTS	BHP
SPEED 5 (400 cfm/ton @ 0.8 esp)	0.2	3686.0	687.4	961.0	1.22
	0.4	3591.0	731.5	1035.4	1.30
	0.6	3494.0	775.2	1093.5	1.38
	0.8	3402.0	819.3	1186.2	1.46

TAP SPEED	ESP	SCFM	R.P.M.	WATTS	BHP
SPEED 6 (2700 SCFM @ 0.2 esp)	0.2	2675.0	542.5	318.0	0.51
	0.4				
	0.6				
	0.8				

TAP SPEED	ESP	SCFM	R.P.M.	WATTS	BHP
SPEED 7 (2700 SCFM @ 0.6 esp)	0.2	2914.0	571.7	404.0	0.64
	0.4	2797.0	630.4	434.5	0.70
	0.6	2680.0	681.3	482.1	0.76
	0.8				

TAP SPEED	ESP	SCFM	R.P.M.	WATTS	BHP
SPEED 8 (2700 SCFM @ 0.8 esp)	0.2	3062.0	590.2	488.4	0.72
	0.4	2944.0	643.9	519.0	0.78
	0.6	2838.0	692.5	565.5	0.84
	0.8	2713.0	742.2	610.9	0.90

TAP SPEED	ESP	SCFM	R.P.M.	WATTS	BHP
SPEED 9 (400 cfm/ton @ 0.6 esp)	0.2	3600.5	677.1	886.9	1.15
	0.4	3503.5	724.1	964.7	1.23
	0.6	3404.7	772.6	998.6	1.31
	0.8	3310.9	819.3	1029.6	1.39

TAP SPEED	ESP	SCFM	R.P.M.	WATTS	BHP
SPEED 10 (400 cfm/ton @ 0.8 esp)	0.2	3686.0	687.4	961.0	1.22
	0.4	3591.0	731.5	1035.4	1.30
	0.6	3494.0	775.2	1093.5	1.38
	0.8	3402.0	819.3	1186.2	1.46

APPENDIX A BLOWER PERFORMANCE DATA
8.5 TON HP

8.5T Heat Pump Medium Static Downshot
Models: DSH1023L, DSH1024L, DSH1027L

TAP SPEED	ESP	SCFM	R.P.M.	WATTS	BHP
SPEED 1 Rated PL (2000cfm @ 0.48 esp)	0.2	2298.0	473.0	255.6	0.33
	0.4	2147.0	548.8	284.0	0.39
	0.6	1967.0	619.3	322.2	0.44
	0.8				
	1				
	1.2				
	1.4				

TAP SPEED	ESP	SCFM	R.P.M.	WATTS	BHP
SPEED 2 Rated PL (2000 cfm @ 0.62 esp)	0.2	2345.0	476.2	273.1	0.34
	0.4	2187.0	548.6	300.3	0.39
	0.6	2019.0	620.9	322.6	0.45
	0.8	1686.0	730.8	378.8	0.53
	1				
	1.2				
	1.4				

TAP SPEED	ESP	SCFM	R.P.M.	WATTS	BHP
SPEED 3 (3000 cfm @ 1.1 esp) Rated FL	0.2	3538.0	619.4	634.4	0.97
	0.4	3413.0	671.7	698.6	1.06
	0.6	3301.0	723.3	739.6	1.14
	0.8	3201.0	769.8	785.9	1.21
	1	3040.0	818.6	808.9	1.29
	1.2	2960.0	870.0	858.4	1.37
	1.4	2839.0	922.4	928.8	1.45

TAP SPEED	ESP	SCFM	R.P.M.	WATTS	BHP
SPEED 4 (3400 cfm @ 1.2 esp) Rated FL	0.2	#REF!	250.4	706.7	1.27
	0.4	1613.3	250.4	770.5	1.35
	0.6	1613.2	250.4	825.5	1.42
	0.8	1613.2	250.4	872.0	1.50
	1	1613.2	250.4	928.1	1.58
	1.2	3450.0	250.4	967.9	1.67
	1.4	1613.2	250.4	1012.0	1.78

TAP SPEED	ESP	SCFM	R.P.M.	WATTS	BHP
SPEED 5 (3400 CFM @ 1.4 esp)	0.2	4156.0	691.7	1066.0	1.50
	0.4	4050.0	740.6	1098.0	1.61
	0.6	3948.0	785.3	1173.0	1.71
	0.8	3843.0	832.4	1222.0	1.81
	1	3750.0	872.5	1266.0	1.90
	1.2	3658.0	914.6	1333.0	1.99
	1.4	3450.0	959.3	1386.0	2.09

TAP SPEED	ESP	SCFM	R.P.M.	WATTS	BHP
SPEED 6 (2700 SCFM @ 1.1 esp) EH Min	0.2	3255.0	582.2	534.4	0.78
	0.4	3118.0	640.4	586.5	0.86
	0.6	3005.0	692.7	638.9	0.93
	0.8	2895.0	743.1	681.9	0.99
	1	2755.0	799.0	723.1	1.07
	1.2	2755.0	799.0	753.2	1.07
	1.4				

TAP SPEED	ESP	SCFM	R.P.M.	WATTS	BHP
SPEED 7 (2700 SCFM @ 1.4 esp) EH Min	0.2	3454.0	604.8	441.3	0.91
	0.4	3339.0	660.8	499.0	0.99
	0.6	3217.0	713.8	536.3	1.07
	0.8	3103.0	762.8	579.3	1.14
	1	2983.0	814.7	622.0	1.22
	1.2	2858.0	867.0	688.1	1.30
	1.4	2705.0	923.4	721.4	1.38

TAP SPEED	ESP	SCFM	R.P.M.	WATTS	BHP
SPEED 8 Rated FL (3000 cfm @ 1.4 esp)	0.2	3711.0	638.4	706.7	1.11
	0.4	3592.0	690.8	770.5	1.20
	0.6	3489.0	740.4	825.5	1.28
	0.8	3391.0	786.4	872.0	1.36
	1	3295.0	835.3	928.1	1.45
	1.2	3178.0	881.6	967.9	1.53
	1.4	3051.0	928.7	1012.0	1.61

TAP SPEED	ESP	SCFM	R.P.M.	WATTS	BHP
SPEED 9 (3400 cfm @ 1.2 esp)	0.2	4210.7	670.8	946.9	1.27
	0.4	4097.9	712.1	999.2	1.35
	0.6	3966.9	750.6	1053.0	1.42
	0.8	3835.4	792.0	1109.0	1.50
	1	3753.3	835.9	1150.0	1.58
	1.2	3450.0	882.4	1217.0	1.67
	1.4	3448.8	940.3	1255.0	1.78

TAP SPEED	ESP	SCFM	R.P.M.	WATTS	BHP
SPEED 10 (3400 SCFM @ 1.4 esp)	0.2	4156.0	691.7	1066.0	1.50
	0.4	4050.0	740.6	1098.0	1.61
	0.6	3948.0	785.3	1173.0	1.71
	0.8	3843.0	832.4	1222.0	1.81
	1	3750.0	872.5	1266.0	1.90
	1.2	3658.0	914.6	1333.0	1.99
	1.4	3450.0	959.3	1386.0	2.09

8.5T Heat Pump Medium Static Horizontal
Models: DSH1023L, DSH1024L, DSH1027L

TAP SPEED	ESP	SCFM	R.P.M.	WATTS	BHP
SPEED 1 Rated PL (2000cfm @ 0.48 esp)	0.2	2284.0	494.2	239.7	0.35
	0.4	2135.0	561.5	262.8	0.40
	0.6	1976.0	632.2	287.3	0.45
	0.8				
	1				
	1.2				
	1.4				

TAP SPEED	ESP	SCFM	R.P.M.	WATTS	BHP
SPEED 2 Rated PL (2000 cfm @ 0.62 esp)	0.2	2304.0	496.8	242.1	0.36
	0.4	2152.0	562.2	266.0	0.40
	0.6	1998.0	633.8	303.5	0.46
	0.8				
	1				
	1.2				
	1.4				

TAP SPEED	ESP	SCFM	R.P.M.	WATTS	BHP
SPEED 3 (3000 cfm @ 1.1 esp) Rated FL	0.2	3466.0	652.4	616.3	1.03
	0.4	3361.0	700.7	669.9	1.10
	0.6	3261.0	744.3	712.3	1.17
	0.8	3176.0	789.9	745.2	1.24
	1	3058.0	836.8	774.6	1.32
	1.2	2952.0	884.9	828.0	1.39
	1.4	2816.0	943.0	880.9	1.48

TAP SPEED	ESP	SCFM	R.P.M.	WATTS	BHP
SPEED 4 (3400 cfm @ 1.2 esp) Rated FL	0.2	3835.0	567.0	696.5	1.07
	0.4	3756.0	603.0	736.3	1.14
	0.6	3662.0	648.0	774.8	1.23
	0.8	3565.0	694.0	811.2	1.31
	1	3503.0	724.0	846.9	1.37
	1.2	3397.0	776.0	888.2	1.47
	1.4	3262.0	844.0	946.8	1.60

TAP SPEED	ESP	SCFM	R.P.M.	WATTS	BHP
SPEED 5 (3400 CFM @ 1.4 esp)	0.2	3971.0	505.0	1038.0	1.10
	0.4	3897.0	539.0	1096.0	1.17
	0.6	3806.0	580.0	1144.0	1.26
	0.8	3707.0	627.0	1187.0	1.36
	1	3653.0	652.0	1240.0	1.42
	1.2	3551.0	701.0	1273.0	1.53
	1.4	3422.0	764.0	1317.0	1.66

TAP SPEED	ESP	SCFM	R.P.M.	WATTS	BHP
SPEED 6 (2700 SCFM @ 1.1 esp) EH Min	0.2	3205.0	611.0	502.2	0.82
	0.4	3089.0	662.9	543.8	0.89
	0.6	2982.0	710.2	572.4	0.95
	0.8	2877.0	757.1	619.4	1.01
	1	2732.0	812.6	654.5	1.09
	1.2				
	1.4				

TAP SPEED	ESP	SCFM	R.P.M.	WATTS	BHP
SPEED 7 (2700 SCFM @ 1.4 esp) EH Min	0.2	3376.0	639.7	584.4	0.96
	0.4	3279.0	689.0	621.5	1.03
	0.6	3172.0	735.7	666.9	1.10
	0.8	3070.0	780.9	705.4	1.17
	1	2959.0	830.7	738.2	1.24
	1.2	2836.0	881.1	771.1	1.32
	1.4	2650.0	954.5	834.6	1.43

TAP SPEED	ESP	SCFM	R.P.M.	WATTS	BHP
SPEED 8 Rated FL (3000 cfm @ 1.4 esp)	0.2	3622.0	675.9	696.5	1.17
	0.4	3530.0	722.6	736.3	1.25
	0.6	3432.0	766.2	774.8	1.33
	0.8	3341.0	809.8	811.2	1.40
	1	3251.0	851.6	846.9	1.48
	1.2	3144.0	897.7	888.2	1.56
	1.4	3006.0	946.9	946.8	1.64

TAP SPEED	ESP	SCFM	R.P.M.	WATTS	BHP
SPEED 9 (3400 cfm @ 1.2 esp)	0.2	3835.0	567.0	930.3	1.07
	0.4	3756.0	603.0	981.4	1.14
	0.6	3662.0	648.0	1020.0	1.23
	0.8	3565.0	694.0	1066.0	1.31
	1	3503.0	724.0	1117.0	1.37
	1.2	3397.0	776.0	1166.0	1.47
	1.4	3262.0	844.0	1189.0	1.60

TAP SPEED	ESP	SCFM	R.P.M.	WATTS	BHP
SPEED 10 (3400 SCFM @ 1.4 esp)	0.2	3971.0	505.0	1038.0	1.10
	0.4	3897.0	539.0	1096.0	1.17
	0.6	3806.0	580.0	1144.0	1.26
	0.8	3707.0	627.0	1187.0	1.36
	1	3653.0	652.0	1240.0	1.42
	1.2	3551.0	701.0	1273.0	1.53
	1.4	3422.0	764.0	1317.0	1.66

APPENDIX A BLOWER PERFORMANCE DATA
8.5 TON HP

8.5T Heat Pump High Static Downshot
Models: DSH1023W, DSH1024W, DSH1027W

Tap Speed	ESP	SCFM	R.P.M.	WATTS	BHP
SPEED 1 (2000 SCFM PL @ 0.71 esp)	0.2	2465.0	489.8	281.4	0.36
	0.4	2293.0	560.6	315.7	0.42
	0.6	2148.0	625.7	346.3	0.46
	0.8	1911.0	714.6	394.2	0.53
	1				
	1.2				
	1.4				
	1.6				
	1.8				

TAP SPEED	ESP	SCFM	R.P.M.	WATTS	BHP
SPEED 2 (2000 scfm pl @ 0.8 esp)	0.2	2465.0	499.1	290.0	0.38
	0.4	2325.0	567.1	229.6	0.44
	0.6	2182.0	632.1	229.6	0.49
	0.8	1993.0	704.9	389.7	0.54
	1				
	1.2				
	1.4				
	1.6				
	1.8				

TAP SPEED	ESP	SCFM	R.P.M.	WATTS	BHP
SPEED 3 (FL 3000 scfm @ 1.6 esp)	0.2	3794.0	662.7	766.4	1.16
	0.4	3688.0	711.0	826.8	1.24
	0.6	3572.0	758.4	882.3	1.32
	0.8	3468.0	807.1	934.6	1.41
	1	3370.0	851.6	981.7	1.49
	1.2	3259.0	894.8	1015.0	1.56
	1.4	3144.0	942.2	1069.0	1.64
	1.6	3011.0	989.9	1115.0	1.73
	1.8	2843.0	1052.0	1178.0	1.84

TAP SPEED	ESP	SCFM	R.P.M.	WATTS	BHP
SPEED 4 (FL 3400 scfm @ 1.6 esp)	0.2	4121.4	698.9	842.1	1.43
	0.4	4018.5	745.3	887.8	1.52
	0.6	3933.8	789.9	948.5	1.61
	0.8	3830.3	832.9	994.7	1.70
	1	3697.4	875.5	1044.0	1.79
	1.2	3617.0	917.9	1084.0	1.87
	1.4	3527.1	958.7	1117.0	1.96
	1.6	3408.0	1002.2	1162.0	2.05
	1.8	3262.0	1047.8	1217.0	2.14

TAP SPEED	ESP	SCFM	R.P.M.	WATTS	BHP
SPEED 5 (3400 scfm @ 1.8 esp)	0.2	4262.0	717.6	1007.0	1.56
	0.4	4164.0	761.3	1057.0	1.66
	0.6	4060.0	804.9	1125.0	1.75
	0.8	3966.0	850.9	1181.0	1.85
	1	3864.0	890.7	1250.0	1.94
	1.2	3773.0	931.5	1301.0	2.03
	1.4	3687.0	972.7	1350.0	2.12
	1.6	3576.0	1012.0	1390.0	2.20
	1.8	3463.0	1055.0	1437.0	2.30

TAP SPEED	ESP	SCFM	R.P.M.	WATTS	BHP
SPEED 6 (FL 2700 scfm @ 1.6 esp)	0.2	3600.0	627.5	656.7	0.96
	0.4	3479.0	679.0	698.3	1.04
	0.6	3363.0	727.8	747.3	1.12
	0.8	3256.0	775.1	808.1	1.19
	1	3144.0	823.4	855.4	1.26
	1.2	3034.0	870.2	893.8	1.34
	1.4	2910.0	921.1	939.6	1.41
	1.6	2726.0	986.6	993.0	1.52
	1.8				

TAP SPEED	ESP	SCFM	R.P.M.	WATTS	BHP
SPEED 7 (FL 2700 scfm @ 1.8 esp)	0.2	3785.0	651.8	758.1	1.11
	0.4	3679.0	700.9	800.1	1.19
	0.6	3556.0	747.7	840.1	1.27
	0.8	3451.0	796.1	887.5	1.36
	1	3359.0	841.1	935.7	1.43
	1.2	3249.0	886.3	976.3	1.51
	1.4	3103.0	933.0	1028.0	1.59
	1.6	2981.0	982.9	1077.0	1.67
	1.8	2754.0	1056.0	1150.0	1.80

TAP SPEED	ESP	SCFM	R.P.M.	WATTS	BHP
SPEED 8 (FL 3000 scfm @ 1.6 esp)	0.2	3794.0	662.7	766.4	1.16
	0.4	3688.0	711.0	826.8	1.24
	0.6	3572.0	758.4	882.3	1.32
	0.8	3468.0	807.1	934.6	1.41
	1	3370.0	851.6	981.7	1.49
	1.2	3259.0	894.8	1015.0	1.56
	1.4	3144.0	942.2	1069.0	1.64
	1.6	3011.0	989.9	1115.0	1.73
	1.8	2843.0	1052.0	1178.0	1.84

TAP SPEED	ESP	SCFM	R.P.M.	WATTS	BHP
SPEED 9 (FL 3400 scfm @ 1.8 esp)	0.2	4121.4	698.9	842.1	1.43
	0.4	4018.5	745.3	887.8	1.52
	0.6	3933.8	789.9	948.5	1.61
	0.8	3830.3	832.9	994.7	1.70
	1	3697.4	875.5	1044.0	1.79
	1.2	3617.0	917.9	1084.0	1.87
	1.4	3527.1	958.7	1117.0	1.96
	1.6	3408.0	1002.2	1162.0	2.05
	1.8	3262.0	1047.8	1217.0	2.14

TAP SPEED	ESP	SCFM	R.P.M.	WATTS	BHP
SPEED 10 (3400 scfm @ 1.8 esp)	0.2	4262.0	717.6	1007.0	1.56
	0.4	4164.0	761.3	1057.0	1.66
	0.6	4060.0	804.9	1125.0	1.75
	0.8	3966.0	850.9	1181.0	1.85
	1	3864.0	890.7	1250.0	1.94
	1.2	3773.0	931.5	1301.0	2.03
	1.4	3687.0	972.7	1350.0	2.12
	1.6	3576.0	1012.0	1390.0	2.20
	1.8	3463.0	1055.0	1437.0	2.30

8.5T Heat Pump High Static Static Horizontal
Models: DSH1023W, DSH1024W, DSH1027W

TAP SPEED	ESP	SCFM	R.P.M.	WATTS	BHP
SPEED 1 (2000 SCFM PL @ 0.71 esp)	0.2	2368.0	509.9	258.7	0.38
	0.4	2247.0	571.5	296.8	0.42
	0.6	2113.0	631.5	310.5	0.47
	0.8	1961.0	704.4	352.4	0.52
	1				
	1.2				
	1.4				
	1.6				
	1.8				

TAP SPEED	ESP	SCFM	R.P.M.	WATTS	BHP
SPEED 2 (2000 scfm pl @ 0.8 esp)	0.2	2449.0	504.1	256.9	0.39
	0.4	2330.0	570.5	294.8	0.44
	0.6	2181.0	638.0	323.6	0.49
	0.8	1991.0	58.9	358.2	0.05
	1				
	1.2				
	1.4				
	1.6				
	1.8				

TAP SPEED	ESP	SCFM	R.P.M.	WATTS	BHP
SPEED 3 (FL 3000 scfm @ 1.6 esp)	0.2	3711.0	686.6	717.4	1.20
	0.4	3608.0	730.2	754.9	1.27
	0.6	3517.0	772.0	805.1	1.35
	0.8	3434.0	815.5	846.4	1.42
	1	3334.0	856.4	888.1	1.49
	1.2	3231.0	900.1	914.2	1.57
	1.4	3125.0	950.9	965.5	1.66
	1.6	2986.0	1001.0	1023.0	1.75
	1.8	2885.0	1041.0	1075.0	1.82

TAP SPEED	ESP	SCFM	R.P.M.	WATTS	BHP
SPEED 4 (FL 3400 scfm @ 1.6 esp)	0.2	3989.3	717.6	892.0	1.47
	0.4	3894.3	760.9	940.8	1.55
	0.6	3816.5	802.6	1004.5	1.64
	0.8	3722.0	842.7	1046.7	1.72
	1	3601.7	882.6	1089.8	1.80
	1.2	3529.4	922.3	1109.0	1.88
	1.4	3449.1	960.5	11882.2	1.96
	1.6	3343.4	1001.3	1238.5	2.04
	1.8	3215.0	1044.1	1291.0	2.13

TAP SPEED	ESP	SCFM	R.P.M.	WATTS	BHP
SPEED 5 (3400 scfm @ 1.8 esp)	0.2	4123.0	749.7	984.4	1.63
	0.4	4032.0	790.0	1028.0	1.72
	0.6	3944.0	830.7	1072.0	1.81
	0.8	3866.0	867.8	1129.0	1.89
	1	3774.0	904.8	1168.0	1.97
	1.2	3690.0	943.2	1214.0	2.05
	1.4	3612.0	979.9	1276.0	2.13
	1.6	3506.0	943.2	1214.0	2.05
	1.8	3401.0	1068.0	1357.0	2.32

TAP SPEED	ESP	SCFM	R.P.M.	WATTS	BHP
SPEED 6 (FL 2700 scfm @ 1.6 esp)	0.2	3460.0	658.6	618.8	1.01
	0.4	3343.0	704.6	649.8	1.08
	0.6	3244.0	751.5	692.7	1.15
	0.8	3154.0	59.9	738.4	0.09
	1	3043.0	839.0	774.1	1.29
	1.2	2940.0	890.2	834.0	1.37
	1.4	2812.0	947.1	868.2	1.45
	1.6	2695.0	989.3	920.5	1.52
	1.8				

TAP SPEED	ESP	SCFM	R.P.M.	WATTS	BHP
SPEED 7 (FL 2700 scfm @ 1.8 esp)	0.2	3626.0	682.8	715.0	1.16
	0.4	3532.0	727.9	763.3	1.24
	0.6	3431.0	771.4	802.0	1.31
	0.8	3344.0	815.2	848.0	1.39
	1	3245.0	858.0	888.0	1.46
	1.2	3125.0	904.6	944.6	1.54
	1.4	3029.0	955.3	985.2	1.63
	1.6	2887.0	1011.0	1040.0	1.72
	1.8	2690.0	1075.0	1097.0	1.83

TAP SPEED	ESP	SCFM	R.P.M.	WATTS	BHP
SPEED 8 (FL 3000 scfm @ 1.6 esp)	0.2	3711.0	686.6	717.4	1.20
	0.4	3608.0	730.2	754.9	1.27
	0.6	3517.0	772.0	805.1	1.35
	0.8	3434.0	815.5	846.4	1.42
	1	3334.0	856.4	888.1	1.49
	1.2	3231.0	900.1	914.2	1.57
	1.4	3125.0	950.9	965.5	1.66
	1.6	2986.0	1001.0	1023.0	1.75
	1.8	2885.0	1041.0	1075.0	1.82

TAP SPEED	ESP	SCFM	R.P.M.	WATTS	BHP
SPEED 9 (FL 3400 scfm @ 1.8 esp)	0.2	3989.3	717.6	892.0	1.47
	0.4	3894.3	760.9	940.8	1.55
	0.6	3816.5	802.6	1004.5	1.64
	0.8	3722.0	842.7	1046.7	1.72
	1	3601.7	882.6	1089.8	1.80
	1.2	3529.4	922.3	1109.0	1.88
	1.4	3449.1	960.5	11882.2	1.96
	1.6	3343.4	1001.3	1238.5	2.04
	1.8	3215.0	1044.1	1291.0	2.13

TAP SPEED	ESP	SCFM	R.P.M.	WATTS	BHP
SPEED 10 (3400 scfm @ 1.8 esp)	0.2	4123.0	749.7	984.4	1.63
	0.4	4032.0	790.0	1028.0	1.72
	0.6	3944.0	830.7	1072.0	1.81
	0.8	3866.0	867.8	1129.0	1.89
	1	3774.0	904.8	1168.0	1.97
	1.2	3690.0	943.2	1214.0	2.05
	1.4	3612.0	979.9	1276.0	2.13
	1.6	3506.0	943.2	1214.0	2.05
	1.8	3401.0	1068.0	1357.0	2.32

APPENDIX A BLOWER PERFORMANCE DATA
10 TON HP

10T Heat Pump Standard Static Downshot
Models: DSH1203D, DSH1204D, DSH1207D

TAP SPEED	ESP	SCFM	R.P.M.	WATTS	BHP
Tap 1 PL Cooling /(fan only)	0.2	2356.0	465.7	211.5	0.30
	0.4	2189.0	548.9	252.5	0.36
	0.6				
	0.8				

TAP SPEED	ESP	SCFM	R.P.M.	WATTS	BHP
TAP 2 PL Cooling	0.2	3026.0	542.9	378.2	0.56
	0.4	2875.0	608.0	416.2	0.63
	0.6	2733.0	669.7	455.0	0.70
	0.8	2346.0	778.1	520.3	0.81

TAP SPEED	ESP	SCFM	R.P.M.	WATTS	BHP
TAP 3 FL Cooling/Heating Rated	0.2	4008.0	649.2	716.7	1.16
	0.4	3879.0	704.0	773.3	1.26
	0.6	3759.0	758.0	831.1	1.35
	0.8	3664.0	807.4	879.6	1.44

TAP SPEED	ESP	SCFM	R.P.M.	WATTS	BHP
TAP 4 400 CFM/ Ton Cooling @ 0.6 esp	0.2	4152.2	692.8	923.4	1.33
	0.4	4055.6	746.3	973.2	1.44
	0.6	3940.2	793.4	1028.0	1.53
	0.8	3821.4	846.1	1083.0	1.63

TAP SPEED	ESP	SCFM	R.P.M.	WATTS	BHP
TAP 5 400 CFM/ Ton Cooling @0.8 esp	0.2	4430.0	697.1	923.4	1.49
	0.4	4314.0	745.6	973.2	1.60
	0.6	4171.0	794.4	1028.0	1.70
	0.8	4054.0	841.7	1083.0	1.80

TAP SPEED	ESP	SCFM	R.P.M.	WATTS	BHP
TAP 6 EH Min @ 0.2 (low heat)	0.2	3203.0	554.5	404.2	0.64
	0.4				
	0.6				
	0.8				

TAP SPEED	ESP	SCFM	R.P.M.	WATTS	BHP
TAP 7 EH Min @ 0.6 (low heat high speed)	0.2	3490.0	587.5	493.0	0.79
	0.4	3331.0	645.0	526.6	0.87
	0.6	3211.0	703.7	576.2	0.95
	0.8				

TAP SPEED	ESP	SCFM	R.P.M.	WATTS	BHP
Tap 8 EH min @ 0.8 (high heat)	0.2	3656.0	605.5	547.7	0.88
	0.4	3519.0	663.7	594.4	0.96
	0.6	3388.0	720.9	643.3	1.04
	0.8	3200.0	773.4	687.1	1.12

TAP SPEED	ESP	SCFM	R.P.M.	WATTS	BHP
TAP 9 400 CFM/ Ton Cooling @ 0.6 esp	0.2	4152.2	692.8	923.4	1.33
	0.4	4055.6	746.3	973.2	1.44
	0.6	3940.2	793.4	1028.0	1.53
	0.8	3821.4	846.1	1083.0	1.63

TAP SPEED	ESP	SCFM	R.P.M.	WATTS	BHP
TAP 10 400 CFM/ Ton Cooling @0.8 esp	0.2	4430.0	697.1	923.4	1.49
	0.4	4314.0	745.6	973.2	1.60
	0.6	4171.0	794.4	1028.0	1.70
	0.8	4054.0	841.7	1083.0	1.80

10T Heat Pump Standard Static Downshot
Models: DSH1203D, DSH1204D, DSH1207D

TAP SPEED	ESP	SCFM	R.P.M.	WATTS	BHP
Tap 1 PL Cooling /(fan only)	0.2	2308.0	468.9	231.9	0.30
	0.4	1969.0	585.9	251.1	0.38
	0.6				
	0.8				

TAP SPEED	ESP	SCFM	R.P.M.	WATTS	BHP
TAP 2 PL Cooling	0.2	2962.0	549.0	355.6	0.57
	0.4	2819.0	612.1	386.9	0.64
	0.6	2673.0	670.9	429.6	0.70
	0.8	2301.0	771.7	489.2	0.80

TAP SPEED	ESP	SCFM	R.P.M.	WATTS	BHP
TAP 3 FL Cooling/Heating Rated	0.2	3897.0	668.8	714.0	1.20
	0.4	3800.0	718.0	761.6	1.28
	0.6	3694.0	765.3	811.1	1.37
	0.8	3588.0	814.0	863.3	1.45

TAP SPEED	ESP	SCFM	R.P.M.	WATTS	BHP
TAP 4 400 CFM/ Ton Cooling @ 0.6 esp	0.2	4102.0	684.3	569.5	1.32
	0.4	4015.0	734.5	597.7	1.41
	0.6	3911.0	777.7	647.9	1.50
	0.8	3804.0	826.1	696.9	1.59

TAP SPEED	ESP	SCFM	R.P.M.	WATTS	BHP
TAP 5 400 CFM/ Ton Cooling @0.8 esp	0.2	4287.0	716.2	926.0	1.54
	0.4	4193.0	760.2	973.3	1.63
	0.6	4097.0	807.7	1037.0	1.73
	0.8	3995.0	848.7	1071.0	1.82

TAP SPEED	ESP	SCFM	R.P.M.	WATTS	BHP
TAP 6 EH Min @ 0.2 (low heat)	0.2	3154.0	572.0	428.5	0.66
	0.4				
	0.6				
	0.8				

TAP SPEED	ESP	SCFM	R.P.M.	WATTS	BHP
TAP 7 EH Min @ 0.6 (low heat high speed)	0.2	3405.0	604.3	513.2	0.81
	0.4	3281.0	660.4	555.7	0.89
	0.6	3150.0	720.3	609.9	0.97
	0.8				

TAP SPEED	ESP	SCFM	R.P.M.	WATTS	BHP
Tap 8 EH min @ 0.8 (high heat)	0.2	3535.0	620.6	569.5	0.90
	0.4	3417.0	675.8	597.7	0.98
	0.6	3299.0	729.7	647.9	1.06
	0.8	3161.0	790.6	696.9	1.14

TAP SPEED	ESP	SCFM	R.P.M.	WATTS	BHP
TAP 9 400 CFM/ Ton Cooling @ 0.6 esp	0.2	4102.0	684.3	569.5	1.32
	0.4	4015.0	734.5	597.7	1.41
	0.6	3911.0	777.7	647.9	1.50
	0.8	3804.0	826.1	696.9	1.59

TAP SPEED	ESP	SCFM	R.P.M.	WATTS	BHP
TAP 10 400 CFM/ Ton Cooling @0.8 esp	0.2	4287.0	716.2	926.0	1.54
	0.4	4193.0	760.2	973.3	1.63
	0.6	4097.0	807.7	1037.0	1.73
	0.8	3995.0	848.7	1071.0	1.82

APPENDIX A BLOWER PERFORMANCE DATA
10 TON HP

10T Heat Pump Medium Static Downshot
Models: DSH1203L, DSH1204L, DSH1207L

TAP SPEED	ESP	SCFM	R.P.M.	WATTS	BHP
T1 PL (2300 SCFM @ 0.4 esp)	0.2	2452.0	481.1	242.1	0.35
	0.4	2285.0	561.4	275.5	0.40
	0.6				
	0.8				
	1				
	1.2				
	1.4				

Speed Tap	ESP	SCFM	R.P.M.	WATTS	BHP
T2 PL (2300 SCFM @ 0.51 esp)	0.2	2620.0	496.3	277.4	0.39
	0.4	2455.0	571.4	317.9	0.45
	0.6	2061.0	684.5	371.8	0.54
	0.8				
	1				
	1.2				
	1.4				

Speed Tap	ESP	SCFM	R.P.M.	WATTS	BHP
T3 (3800 SCFM @1.1 esp)	0.2	4315.0	689.0	890.7	1.41
	0.4	4156.0	735.9	940.3	1.51
	0.6	4047.0	787.1	1001.0	1.61
	0.8	3941.0	837.6	1063.0	1.72
	1	3828.0	880.9	1113.0	1.81
	1.2	3710.0	928.7	1171.0	1.91
	1.4	3369.0	1029.0	1282.0	2.11

Speed Tap	ESP	SCFM	R.P.M.	WATTS	BHP
T4 (3800SCFM @ 1.4 esp)	0.2	4501.0	713.8	1001.0	1.61
	0.4	4393.0	758.9	1062.0	1.71
	0.6	4279.0	808.7	1121.0	1.82
	0.8	4142.0	856.8	1178.0	1.93
	1	4037.0	900.1	1232.0	2.03
	1.2	3930.0	944.5	1289.0	2.13
	1.4	3786.0	995.1	1349.0	2.24

Speed Tap	ESP	SCFM	R.P.M.	WATTS	BHP
T5 (4000 SCFM @ 1.4 esp)	0.2	4687.0	731.7	1100.0	1.78
	0.4	4584.0	776.9	1160.0	1.89
	0.6	4466.0	824.9	1216.0	2.00
	0.8	4361.0	871.5	1289.0	2.12
	1	4246.0	916.1	1356.0	2.22
	1.2	4120.0	956.9	1406.0	2.32
	1.4	3996.0	1000.0	1454.0	2.43

Speed Tap	ESP	SCFM	R.P.M.	WATTS	BHP
T6 EH Min (3150 SCFM @ 1.1 esp)	0.2	3842.0	642.7	683.8	1.08
	0.4	3712.0	697.1	734.2	1.17
	0.6	3600.0	751.0	795.7	1.26
	0.8	3477.0	800.1	835.1	1.34
	1	3353.0	855.1	901.5	1.44
	1.2				
	1.4				

Speed Tap	ESP	SCFM	R.P.M.	WATTS	BHP
T7 (3150 SCFM @ 1.4 esp) EH Min	0.2	4125.0	675.1	826.8	1.30
	0.4	4012.0	724.9	874.1	1.40
	0.6	3896.0	775.5	924.9	1.49
	0.8	3789.0	826.4	981.6	1.59
	1	3679.0	873.1	1033.0	1.68
	1.2	3519.0	927.9	1089.0	1.79
	1.4	3146.0	1027.0	1197.0	1.98

Speed Tap	ESP	SCFM	R.P.M.	WATTS	BHP
T8 (3800 SCFM @1.1 esp) EH	0.2	4315.0	689.0	890.7	1.41
	0.4	4156.0	735.9	940.3	1.51
	0.6	4047.0	787.1	1001.0	1.61
	0.8	3941.0	837.6	1063.0	1.72
	1	3828.0	880.9	1113.0	1.81
	1.2	3710.0	928.7	1171.0	1.91
	1.4	3369.0	1029.0	1282.0	2.11

Speed Tap	ESP	SCFM	R.P.M.	WATTS	BHP
T9 (3800SCFM @ 1.4 esp) EH	0.2	4501.0	713.8	1001.0	1.61
	0.4	4393.0	758.9	1062.0	1.71
	0.6	4279.0	808.7	1121.0	1.82
	0.8	4142.0	856.8	1178.0	1.93
	1	4037.0	900.1	1232.0	2.03
	1.2	3930.0	944.5	1289.0	2.13
	1.4	3786.0	995.1	1349.0	2.24

Speed Tap	ESP	SCFM	R.P.M.	WATTS	BHP
T10 (4000 SCFM @ 1.4 esp)	0.2	4687.0	731.7	1100.0	1.78
	0.4	4584.0	776.9	1160.0	1.89
	0.6	4466.0	824.9	1216.0	2.00
	0.8	4361.0	871.5	1289.0	2.12
	1	4246.0	916.1	1356.0	2.22
	1.2	4120.0	956.9	1406.0	2.32
	1.4	3996.0	1000.0	1454.0	2.43

10T Heat Pump Medium Static Horizontal
Models: DSH1203L, DSH1204L, DSH1207L

Speed Tap	ESP	STD	R.P.M.	WATTS	BHP
T1 PL (2300 SCFM @ 0.4 esp)	0.20	2457.0	493.1	247.7	0.35
	0.40	2301.0	570.9	284.6	0.41
	0.60				
	0.80				
	1.00				
	1.20				
	1.40				

Speed Tap	ESP	SCFM	R.P.M.	WATTS	BHP
T2 PL (2300 SCFM @ 0.51 esp)	0.20	2577.0	597.4	273.6	0.47
	0.40	2435.0	649.7	309.0	0.51
	0.60	2053.0	734.7	367.1	0.58
	0.80				
	1.00				
	1.20				
	1.40				

Speed Tap	ESP	SCFM	R.P.M.	WATTS	BHP
T3 (3800 SCFM @1.1 esp)	0.20	4277.0	696.2	834.2	1.43
	0.40	4174.0	738.5	873.0	1.51
	0.60	4076.0	785.4	938.1	1.61
	0.80	3970.0	831.3	992.3	1.71
	1.00	3822.0	888.1	1064.0	1.82
	1.20	3702.0	938.2	1119.0	1.92
	1.40	3427.0	1019.0	1228.0	2.09

Speed Tap	ESP	SCFM	R.P.M.	WATTS	BHP
T4 (3800SCFM @ 1.4 esp)	0.20	4477.0	718.5	950.6	1.62
	0.40	4373.0	763.0	1005.0	1.72
	0.60	4276.0	808.1	1063.0	1.82
	0.80	4180.0	853.1	1139.0	1.92
	1.00	4049.0	900.6	1192.0	2.03
	1.20	3933.0	950.4	1254.0	2.14
	1.40	3791.0	1001.0	1308.0	2.25

Speed Tap	ESP	STD	R.P.M.	WATTS	BHP
T5 (4000 SCFM @ 1.4 esp)	0.20	4669.0	748.8	1119.0	1.82
	0.40	4559.0	793.8	1169.0	1.93
	0.60	4466.0	835.5	1228.0	2.03
	0.80	4372.0	876.3	1276.0	2.13
	1.00	4226.0	923.7	1353.0	2.24
	1.20	4126.0	969.9	1409.0	2.35
	1.40	4002.0	1010.0	1460.0	2.45

Speed Tap	ESP	STD	R.P.M.	WATTS	BHP
T6 EH Min (3150 SCFM @ 1.1 esp)	0.20	3831.0	654.3	676.9	1.10
	0.40	3730.0	703.1	711.1	1.18
	0.60	3626.0	750.5	757.1	1.26
	0.80	3503.0	803.2	797.5	1.35
	1.00	3377.0	859.4	865.5	1.44
	1.20				
	1.40				

Speed Tap	ESP	STD	R.P.M.	WATTS	BHP
T7 (3150 SCFM @ 1.4 esp) EH Min	0.20	4102.0	684.3	801.9	1.32
	0.40	4015.0	734.5	853.7	1.41
	0.60	3911.0	777.7	894.4	1.50
	0.80	3804.0	826.1	946.2	1.59
	1.00	3700.0	874.5	1017.0	1.68
	1.20	3540.0	933.4	1065.0	1.80
	1.40	3162.0	1028.0	1163.0	1.98

Speed Tap	ESP	SCFM	R.P.M.	WATTS	BHP
T8 (3800 SCFM @1.1 esp) EH	0.20	4277.0	696.2	834.2	1.43
	0.40	4174.0	738.5	873.0	1.51
	0.60	4076.0	785.4	938.1	1.61
	0.80	3970.0	831.3	992.3	1.71
	1.00	3822.0	888.1	1064.0	1.82
	1.20	3702.0	938.2	1119.0	1.92
	1.40	3427.0	1019.0	1228.0	2.09

Speed Tap	ESP	SCFM	R.P.M.	WATTS	BHP
T9 (3800SCFM @ 1.4 esp) EH	0.20	4477.0	718.5	950.6	1.62
	0.40	4373.0	763.0	1005.0	1.72
	0.60	4276.0	808.1	1063.0	1.82
	0.80	4180.0	853.1	1139.0	1.92
	1.00	4049.0	900.6	1192.0	2.03
	1.20	3933.0	950.4	1254.0	2.14
	1.40	3791.0	1001.0	1308.0	2.25

Speed Tap	ESP	STD	R.P.M.	WATTS	BHP
T10 (4000 SCFM @ 1.4 esp)	0.20	4669.0	748.8	1119.0	1.82
	0.40	4559.0	793.8	1169.0	1.93
	0.60	4466.0	835.5	1228.0	2.03
	0.80	4372.0	876.3	1276.0	2.13
	1.00	4226.0	923.7	1353.0	2.24
	1.20	4126.0	969.9	1409.0	2.35
	1.40	4002.0	1010.0	1460.0	2.45

APPENDIX A BLOWER PERFORMANCE DATA
10 TON HP

10T Heat Pump High Static Downshot
Models: DSH1203W, DSH1204W, DSH1207W

TAP SPEED	ESP	SCFM	R.P.M.	WATTS	BHP
T1 PL (2300 SCFM @ 0.58 esp)	0.2	2682.0	503.6	266.6	0.45
	0.4	2553.0	576.7	315.3	0.51
	0.6	2181.0	691.0	373.0	0.61
	0.8				
	1				
	1.2				
	1.4				
	1.6				
	1.8				

TAP SPEED	ESP	SCFM	R.P.M.	WATTS	BHP
T2 PL (2300 SCFM @ 0.62 esp)	0.2	2778.0	514.4	281.8	0.47
	0.4	2633.0	582.5	322.8	0.53
	0.6	2246.0	697.7	388.5	0.64
	0.8	2046.0	751.0	420.4	0.68
	1				
	1.2				
	1.4				
	1.6				
	1.8				

TAP SPEED	ESP	SCFM	R.P.M.	WATTS	BHP
T3 PL (3800 SCFM @ 1.6 esp)	0.2	4809.0	751.1	1086.0	1.68
	0.4	4693.0	796.6	1150.0	1.78
	0.6	4579.0	840.3	1250.0	1.88
	0.8	4480.0	882.8	1271.0	1.97
	1	4374.0	919.9	1328.0	2.05
	1.2	4234.0	962.2	1383.0	2.15
	1.4	4107.0	1004.0	1457.0	2.24
	1.6	3846.0	1086.0	1564.0	2.43
	1.8	3558.0	1151.0	1659.0	2.57

TAP SPEED	ESP	SCFM	R.P.M.	WATTS	BHP
T4 (FL 4000 scfm @ 1.8 esp)	0.2	4992.0	772.4	1233.0	1.85
	0.4	4885.0	818.4	1306.0	1.96
	0.6	4765.0	856.5	1358.0	2.05
	0.8	4663.0	899.8	1423.0	2.16
	1	4556.0	937.2	1468.0	2.25
	1.2	4463.0	977.3	1550.0	2.34
	1.4	4340.0	1016.0	1605.0	2.44
	1.6	4146.0	1076.0	1707.0	2.58
	1.8	3833.0	1159.0	1837.0	2.78

TAP SPEED	ESP	SCFM	R.P.M.	WATTS	BHP
T5 4000 SCFM @ 1.8	0.2	5193.6	643.4	1570.0	1.64
	0.4	5093.4	675.8	1644.0	1.72
	0.6	4987.6	709.9	1712.0	1.81
	0.8	4867.3	748.8	1777.0	1.91
	1	4768.7	780.7	1845.0	1.99
	1.2	4659.1	816.1	1902.0	2.08
	1.4	4543.1	853.6	1961.0	2.18
	1.6	4476.7	875.0	2025.0	2.23
	1.8	4050.0	996.8	2107.0	2.54

TAP SPEED	ESP	SCFM	R.P.M.	WATTS	BHP
T6 EH1 (3150 scfm @ 1.6 esp)	0.2	4525.0	713.7	936.6	1.41
	0.4	4413.0	760.3	1001.0	1.50
	0.6	4282.0	807.1	1049.0	1.60
	0.8	4143.0	852.6	1107.0	1.69
	1	4039.0	893.9	1163.0	1.77
	1.2	3913.0	936.4	1211.0	1.85
	1.4	3688.0	1013.0	1299.0	2.00
	1.6	3352.0	1089.0	1381.0	2.15
	1.8	3210.0	1126.0	1435.0	2.23

TAP SPEED	ESP	SCFM	R.P.M.	WATTS	BHP
T7 EH2(3150 scfm @ 1.8 esp	0.2	4654.0	732.2	1010.0	1.53
	0.4	4529.0	776.6	1055.0	1.62
	0.6	4414.0	822.6	1116.0	1.72
	0.8	4299.0	864.4	1159.0	1.81
	1	4170.0	906.5	1218.0	1.89
	1.2	4063.0	949.3	1277.0	1.98
	1.4	3869.0	1012.0	1342.0	2.12
	1.6	3543.0	1093.0	1441.0	2.28
	1.8	3369.0	1139.0	1515.0	2.38

TAP SPEED	ESP	SCFM	R.P.M.	WATTS	BHP
T8 EH+HP (FL 3800 scfm @ 1.6 esp)	0.2	4809.0	751.1	1086.0	1.68
	0.4	4693.0	796.6	1150.0	1.78
	0.6	4579.0	840.3	1250.0	1.88
	0.8	4480.0	882.8	1271.0	1.97
	1	4374.0	919.9	1328.0	2.05
	1.2	4234.0	962.2	1383.0	2.15
	1.4	4107.0	1004.0	1457.0	2.24
	1.6	3846.0	1086.0	1564.0	2.43
	1.8	3558.0	1151.0	1659.0	2.57

TAP SPEED	ESP	SCFM	R.P.M.	WATTS	BHP
T9 EH+HP (FL 3800 scfm @ 1.8 esp)	0.2	4992.0	772.4	1233.0	1.85
	0.4	4885.0	818.4	1306.0	1.96
	0.6	4765.0	856.5	1358.0	2.05
	0.8	4663.0	899.8	1423.0	2.16
	1	4556.0	937.2	1468.0	2.25
	1.2	4463.0	977.3	1550.0	2.34
	1.4	4340.0	1016.0	1605.0	2.44
	1.6	4146.0	1076.0	1707.0	2.58
	1.8	3833.0	1159.0	1837.0	2.78

TAP SPEED	ESP	SCFM	R.P.M.	WATTS	BHP
T10 4000 SCFM @ 1.8	0.2	5193.6	643.4	1570.0	1.64
	0.4	5093.4	675.8	1644.0	1.72
	0.6	4987.6	709.9	1712.0	1.81
	0.8	4867.3	748.8	1777.0	1.91
	1	4768.7	780.7	1845.0	1.99
	1.2	4659.1	816.1	1902.0	2.08
	1.4	4543.1	853.6	1961.0	2.18
	1.6	4476.7	875.0	2025.0	2.23
	1.8	4050.0	996.8	2107.0	2.54

10T Heat Pump High Static Horizontal
Models: DSH1203W, DSH1204W, DSH1207W

TAP SPEED	ESP	SCFM	R.P.M.	WATTS	BHP
T1 PL (2300 SCFM @ 0.58 esp)	0.2	2701.0	549.9	316.1	0.49
	0.4	2631.0	586.4	330.9	0.52
	0.6	2304.0	701.3	398.4	0.62
	0.8	2163.0	750.2	437.9	0.66
	1.0				
	1.2				
	1.4				
	1.6				
	1.8				

TAP SPEED	ESP	SCFM	R.P.M.	WATTS	BHP
T2 PL (2300 SCFM @ 0.62 esp)	0.2	2827.0	532.2	323.8	0.48
	0.4	2693.0	593.9	363.5	0.54
	0.6	2355.0	704.8	432.6	0.64
	0.8	2193.0	758.6	467.6	0.69
	1.0	2068.0	806.3	489.2	0.73
	1.2				
	1.4				
	1.6				
	1.8				

TAP SPEED	ESP	SCFM	R.P.M.	WATTS	BHP
T3 PL (3800 SCFM @ 1.6 esp)	0.2	4683.0	789.0	1158.0	1.76
	0.4	4593.0	813.9	1221.0	1.82
	0.6	4497.0	855.1	1281.0	1.91
	0.8	4388.0	893.5	1331.0	2.00
	1.0	4297.0	932.1	1390.0	2.08
	1.2	4167.0	972.1	1448.0	2.17
	1.4	4085.0	1004.0	1497.0	2.24
	1.6	3836.0	1089.0	1608.0	2.43
	1.8	3553.0	1153.0	1689.0	2.58

TAP SPEED	ESP	SCFM	R.P.M.	WATTS	BHP
T4 (FL 4000 scfm @ 1.8 esp)	0.2	4878.0	797.6	1300.0	1.91
	0.4	4779.0	837.4	1365.0	2.01
	0.6	4692.0	874.3	1421.0	2.10
	0.8	4580.0	911.7	1483.0	2.19
	1.0	4491.0	950.6	1539.0	2.28
	1.2	4379.0	987.9	1582.0	2.37
	1.4	4280.0	11.0	1656.0	0.03
	1.6	4170.0	1057.0	1702.0	2.53
	1.8	3800.0	1163.0	1855.0	2.79

TAP SPEED	ESP	SCFM	R.P.M.	WATTS	BHP
T5 4000 SCFM @ 1.8	0.2	5040.2	675.6	1614.0	1.72
	0.4	4949.9	705.7	1633.0	1.80
	0.6	4854.6	737.5	1741.0	1.88
	0.8	4746.3	773.6	1801.0	1.97
	1.0	4657.4	803.3	1858.0	2.05
	1.2	4558.7	836.2	1923.0	2.13
	1.4	4454.1	871.1	1964.0	2.22
	1.6	4394.3	891.1	2025.0	2.27
	1.8	4054.8	1004.3	2104.0	2.56

TAP SPEED	ESP	SCFM	R.P.M.	WATTS	BHP
T6 EH1 (3150 scfm @ 1.6 esp)	0.2	4277.0	728.6	953.4	1.44
	0.4	4146.0	775.3	1006.0	1.53
	0.6	4035.0	821.6	1057.0	1.62
	0.8	3923.0	864.8	1116.0	1.71
	1	3810.0	912.6	1179.0	1.80
	1.2	3657.0	965.4	1234.0	1.91
	1.4	3353.0	1048.0	1310.0	2.07
	1.6	3157.0	1098.0	1372.0	2.17
	1.8	3024.0	1130.0	1416.0	2.23

TAP SPEED	ESP	SCFM	R.P.M.	WATTS	BHP
T7 EH2(3150 scfm @ 1.8 esp	0.2	4391.0	745.8	1009.0	1.56
	0.4	4255.0	790.9	1063.0	1.65
	0.6	4158.0	836.3	1121.0	1.75
	0.8	4045.0	879.3	1171.0	1.84
	1	3927.0	923.3	1226.0	1.93
	1.2	3797.0	975.5	1294.0	2.04
	1.4	3597.0	1035.0	1393.0	2.16
	1.6	3287.0	1110.0	1467.0	2.32
	1.8	3155.0	1146.0	1515.0	2.40

TAP SPEED	ESP	SCFM	R.P.M.	WATTS	BHP
T8 EH+HP (FL 3800 scfm @ 1.6 esp)	0.2	4683.0	789.0	1158.0	1.76
	0.4	4593.0	813.9	1221.0	1.82
	0.6	4497.0	855.1	1281.0	1.91
	0.8	4388.0	893.5	1331.0	2.00
	1.0	4297.0	932.1	1390.0	2.08
	1.2	4167.0	972.1	1448.0	2.17
	1.4	4085.0	1004.0	1497.0	2.24
	1.6	3836.0	1089.0	1608.0	2.43
	1.8	3553.0	1153.0	1689.0	2.58

TAP SPEED	ESP	SCFM	R.P.M.	WATTS	BHP
T9 EH+HP (FL 3800 scfm @ 1.8 esp)	0.2	4878.0	797.6	1300.0	1.91
	0.4	4779.0	837.4	1365.0	2.01
	0.6	4692.0	874.3	1421.0	2.10
	0.8	4580.0	911.7	1483.0	2.19
	1.0	4491.0	950.6	1539.0	2.28
	1.2	43.8	987.9	1582.0	2.37
	1.4	4280.0	11.0	1656.0	0.03
	1.6	4170.0	1057.0	1702.0	2.53
	1.8	3800.0	1163.0	1855.0	2.79

TAP SPEED	ESP	SCFM	R.P.M.	WATTS	BHP
T10 4000 SCFM @ 1.8	0.2	5040.2	675.6	1614.0	1.72
	0.4	4949.9	705.7	1633.0	1.80
	0.6	4854.6	737.5	1741.0	1.88
	0.8	4746.3	773.6	1801.0	1.97
	1.0	4657.4	803.3	1858.0	2.05
	1.2	4558.7	836.2	1923.0	2.13
	1.4	4454.1	871.1	1964.0	2.22
	1.6	4394.3	891.1	2025.0	2.27
	1.8	4054.8	1004.3	2104.0	2.56

APPENDIX B ELECTRICAL DATA

Electrical Data

Model Number	Electrical Rating	Compressor			Outdoor Fan Motor			Indoor Fan Motor			Optional Electric Heat			Optional Powered Convienience Outlet	Optional Power Exhaust*	Power Supply	
		QTY	RLA	LRA	QTY	HP	FLA	QTY	HP	FLA	Part #	KW*	FLA	FLA	FLA	MCA	MOP
DSC0903D	208/230/3/60	2	12.2	120	2	0.33	2.0	1	2.4	8.0	-	-	-	-	-	39.4/39.4	50/50
											-	-	-	9.6/8.7	-	49.0/48.1	60/60
											-	-	-	-	3.3/3.0 (2.4)	42.7/42.4	50/50
											-	-	-	9.6/8.7	3.3/3.0 (2.4)	52.3/51.1	60/60
											EH*D-3M15	11.3/15.0	31.3/36.1	-	-	49.1/55.1	50/60
														9.6/8.7	-	61.1/66.0	70/70
														-	3.3/3.0 (2.4)	53.2/58.9	60/60
														9.6/8.7	3.3/3.0 (2.4)	65.2/69.7	70/70
											EH*D-3M30	22.5/30.0	62.5/72.2	-	-	88.2/100	90/110
														9.6/8.7	-	100/111	110/125
														-	3.3/3.0 (2.4)	92.3/104	100/110
														9.6/8.7	3.3/3.0 (2.4)	104/115	110/125
											EH*D-3M45	33.8/45.0	93.8/108	-	-	127/145	150/150
														9.6/8.7	-	139/156	150/175
														-	3.3/3.0 (2.4)	131/149	150/150
														9.6/8.7	3.3/3.0 (2.4)	143/160	150/175
DSC0903L	208/230/3/60	2	12.2	120	2	0.33	2.0	1	2.4	8.0	-	-	-	-	-	39.4/39.4	50/50
											-	-	-	9.6/8.7	-	49.0/48.1	60/60
											-	-	-	-	3.3/3.0 (2.4)	42.7/42.4	50/50
											-	-	-	9.6/8.7	3.3/3.0 (2.4)	52.3/51.1	60/60
											EH*D-3M15	11.3/15.0	31.3/36.1	-	-	49.1/55.1	50/60
														9.6/8.7	-	61.1/66.0	70/70
														-	3.3/3.0 (2.4)	53.2/58.9	60/60
														9.6/8.7	3.3/3.0 (2.4)	65.2/69.7	70/70
											EH*D-3M30	22.5/30.0	62.5/72.2	-	-	88.2/100	90/110
														9.6/8.7	-	100/111	110/125
														-	3.3/3.0 (2.4)	92.3/104	100/110
														9.6/8.7	3.3/3.0 (2.4)	104/115	110/125
											EH*D-3M45	33.8/45.0	93.8/108	-	-	127/145	150/150
														9.6/8.7	-	139/156	150/175
														-	3.3/3.0 (2.4)	131/149	150/150
														9.6/8.7	3.3/3.0 (2.4)	143/160	150/175
DSC0903W	208/230/3/60	2	12.2	120	2	0.33	2.0	1	2.4	8.0	-	-	-	-	-	39.4/39.4	50/50
											-	-	-	9.6/8.7	-	49.0/48.1	60/60
											-	-	-	-	3.3/3.0 (2.4)	42.7/42.4	50/50
											-	-	-	9.6/8.7	3.3/3.0 (2.4)	52.3/51.1	60/60
											EH*D-3M15	11.3/15.0	31.3/36.1	-	-	49.1/55.1	50/60
														9.6/8.7	-	61.1/66.0	70/70
														-	3.3/3.0 (2.4)	53.2/58.9	60/60
														9.6/8.7	3.3/3.0 (2.4)	65.2/69.7	70/70
											EH*D-3M30	22.5/30.0	62.5/72.2	-	-	88.2/100	90/110
														9.6/8.7	-	100/111	110/125
														-	3.3/3.0 (2.4)	92.3/104	100/110
														9.6/8.7	3.3/3.0 (2.4)	104/115	110/125
											EH*D-3M45	33.8/45.0	93.8/108	-	-	127/145	150/150
														9.6/8.7	-	139/156	150/175
														-	3.3/3.0 (2.4)	131/149	150/150
														9.6/8.7	3.3/3.0 (2.4)	143/160	150/175
DSC0904D	460/3/60	2	5.8	55.1	2	0.33	0.85	1	2.4	5.4	-	-	-	-	-	20.1	25
											-	-	-	4.3	-	24.4	30
											-	-	-	-	1.2 (1.0)	21.3	25
											-	-	-	4.3	1.2 (1.0)	25.6	30
											EH*D-4M15	15.0	18.0	-	-	29.3	30
														4.3	-	34.7	35
														-	1.2 (1.0)	30.8	35
														4.3	1.2 (1.0)	36.2	40
											EH*D-4M30	30.0	36.1	-	-	51.9	60
														4.3	-	57.2	60
														-	1.2 (1.0)	53.4	60
														4.3	1.2 (1.0)	58.7	60
											EH*D-4M45	45.0	54.1	-	-	74.4	80
														4.3	-	79.8	80
														-	1.2 (1.0)	75.9	80
														4.3	1.2 (1.0)	81.3	90
DSC0904L	460/3/60	2	5.8	55.1	2	0.33	0.85	1	2.4	5.4	-	-	-	-	-	20.1	25
											-	-	-	4.3	-	24.4	30
											-	-	-	-	1.2 (1.0)	21.3	25
											-	-	-	4.3	1.2 (1.0)	25.6	30
											EH*D-4M15	15.0	18.0	-	-	29.3	30
														4.3	-	34.7	35
														-	1.2 (1.0)	30.8	35
														4.3	1.2 (1.0)	36.2	40
											EH*D-4M30	30.0	36.1	-	-	51.9	60
														4.3	-	57.2	60
														-	1.2 (1.0)	53.4	60
														4.3	1.2 (1.0)	58.7	60
											EH*D-4M45	45.0	54.1	-	-	74.4	80
														4.3	-	79.8	80
														-	1.2 (1.0)	75.9	80
														4.3	1.2 (1.0)	81.3	90
DSC0904W	460/3/60	2	5.8	55.1	2	0.33	0.85	1	2.4	5.4	-	-	-	-	-	20.1	25
											-	-	-	4.3	-	24.4	30
											-	-	-	-	1.2 (1.0)	21.3	25
											-	-	-	4.3	1.2 (1.0)	25.6	30
											EH*D-4M15	15.0	18.0	-	-	29.3	30
														4.3	-	34.7	35
														-	1.2 (1.0)	30.8	35
														4.3	1.2 (1.0)	36.2	40
											EH*D-4M30	30.0	36.1	-	-	51.9	60
														4.3	-	57.2	60
														-	1.2 (1.0)	53.4	60
														4.3	1.2 (1.0)	58.7	60
											EH*D-4M45	45.0	54.1	-	-	74.4	80
														4.3	-	79.8	80
														-	1.2 (1.0)	75.9	80
														4.3	1.2 (1.0)	81.3	90

***NOTE:** Use higher value for calculation of MCA. Use lower value for calculation of MOP.

APPENDIX B ELECTRICAL DATA

Electrical Data

Model Number	Electrical Rating	Compressor			Outdoor Fan Motor			Indoor Fan Motor			Optional Electric Heat			Optional Powered Convienience Outlet	Optional Power Exhaust*	Power Supply	
		QTY	RLA	LRA	QTY	HP	FLA	QTY	HP	FLA	Part #	KW*	FLA	FLA	FLA	MCA	MOP
DSC0907D	575/3/60	2	5.8	41.0	2	0.33	0.67	1	2.4	4.0	-	-	-	-	-	18.3	20
											-	-	-	3.5	-	21.8	25
											-	-	-	-	1.3	19.6	25
											-	-	-	3.5	1.3	23.1	25
											EH*D-7M15	15.0	14.4	-	-	23.0	25
														3.5	-	27.4	30
														-	1.3	24.7	25
														3.5	1.3	29.0	30
											EH*D-7M30	30.0	28.9	-	-	41.1	45
														3.5	-	45.5	50
														-	1.3	42.7	45
														3.5	1.3	47.1	50
											EH*D-7M45	45.0	43.3	-	-	59.1	60
														3.5	-	63.5	70
														-	1.3	60.8	70
														3.5	1.3	65.1	70
DSC0907L	575/3/60	2	5.8	41.0	2	0.33	0.67	1	2.4	4.0	-	-	-	-	-	18.3	20
											-	-	-	3.5	-	21.8	25
											-	-	-	-	1.3	19.6	25
											-	-	-	3.5	1.3	23.1	25
											EH*D-7M15	15.0	14.4	-	-	23.0	25
														3.5	-	27.4	30
														-	1.3	24.7	25
														3.5	1.3	29.0	30
											EH*D-7M30	30.0	28.9	-	-	41.1	45
														3.5	-	45.5	50
														-	1.3	42.7	45
														3.5	1.3	47.1	50
											EH*D-7M45	45.0	43.3	-	-	59.1	60
														3.5	-	63.5	70
														-	1.3	60.8	70
														3.5	1.3	65.1	70
DSC0907W	575/3/60	2	5.8	41.0	2	0.33	0.67	1	2.4	4.0	-	-	-	-	-	18.3	20
											-	-	-	3.5	-	21.8	25
											-	-	-	-	1.3	19.6	25
											-	-	-	3.5	1.3	23.1	25
											EH*D-7M15	15.0	14.4	-	-	23.0	25
														3.5	-	27.4	30
														-	1.3	24.7	25
														3.5	1.3	29.0	30
											EH*D-7M30	30.0	28.9	-	-	41.1	45
														3.5	-	45.5	50
														-	1.3	42.7	45
														3.5	1.3	47.1	50
											EH*D-7M45	45.0	43.3	-	-	59.1	60
														3.5	-	63.5	70
														-	1.3	60.8	70
														3.5	1.3	65.1	70
DSC1023D	208/230/3/60	2	14.1	120	2	0.33	2.0	1	2.4	8.0	-	-	-	-	-	43.7/43.7	50/50
											-	-	-	9.6/8.7	-	53.3/52.4	60/60
											-	-	-	-	3.3/3.0 (2.4)	47.0/46.7	60/60
											-	-	-	9.6/8.7	3.3/3.0 (2.4)	56.6/55.4	60/60
											EH*D-3M15	11.3/15.0	31.3/36.1	-	-	49.1/55.1	50/60
														9.6/8.7	-	61.1/66.0	70/70
														-	3.3/3.0 (2.4)	53.2/58.9	60/60
														9.6/8.7	3.3/3.0 (2.4)	65.2/69.7	70/70
											EH*D-3M30	22.5/30.0	62.5/72.2	-	-	88.2/100	90/110
														9.6/8.7	-	100/111	110/125
														-	3.3/3.0 (2.4)	92.3/104	100/110
														9.6/8.7	3.3/3.0 (2.4)	104/115	110/125
											EH*D-3M45	33.8/45.0	93.8/108	-	-	127/145	150/150
														9.6/8.7	-	139/156	150/175
														-	3.3/3.0 (2.4)	131/149	150/150
														9.6/8.7	3.3/3.0 (2.4)	143/160	150/175
DSC1023L	208/230/3/60	2	14.1	120	2	0.33	2.0	1	2.4	8.0	-	-	-	-	-	43.7/43.7	50/50
											-	-	-	9.6/8.7	-	53.3/52.4	60/60
											-	-	-	-	3.3/3.0 (2.4)	47.0/46.7	60/60
											-	-	-	9.6/8.7	3.3/3.0 (2.4)	56.6/55.4	60/60
											EH*D-3M15	11.3/15.0	31.3/36.1	-	-	49.1/55.1	50/60
														9.6/8.7	-	61.1/66.0	70/70
														-	3.3/3.0 (2.4)	53.2/58.9	60/60
														9.6/8.7	3.3/3.0 (2.4)	65.2/69.7	70/70
											EH*D-3M30	22.5/30.0	62.5/72.2	-	-	88.2/100	90/110
														9.6/8.7	-	100/111	110/125
														-	3.3/3.0 (2.4)	92.3/104	100/110
														9.6/8.7	3.3/3.0 (2.4)	104/115	110/125
											EH*D-3M45	33.8/45.0	93.8/108	-	-	127/145	150/150
														9.6/8.7	-	139/156	150/175
														-	3.3/3.0 (2.4)	131/149	150/150
														9.6/8.7	3.3/3.0 (2.4)	143/160	150/175
DSC1023W	208/230/3/60	2	14.1	120	2	0.33	2.0	1	2.4	8.0	-	-	-	-	-	43.7/43.7	50/50
											-	-	-	9.6/8.7	-	53.3/52.4	60/60
											-	-	-	-	3.3/3.0 (2.4)	47.0/46.7	60/60
											-	-	-	9.6/8.7	3.3/3.0 (2.4)	56.6/55.4	60/60
											EH*D-3M15	11.3/15.0	31.3/36.1	-	-	49.1/55.1	50/60
														9.6/8.7	-	61.1/66.0	70/70
														-	3.3/3.0 (2.4)	53.2/58.9	60/60
														9.6/8.7	3.3/3.0 (2.4)	65.2/69.7	70/70
											EH*D-3M30	22.5/30.0	62.5/72.2	-	-	88.2/100	90/110
														9.6/8.7	-	100/111	110/125
														-	3.3/3.0 (2.4)	92.3/104	100/110
														9.6/8.7	3.3/3.0 (2.4)	104/115	110/125
											EH*D-3M45	33.8/45.0	93.8/108	-	-	127/145	150/150
														9.6/8.7	-	139/156	150/175
														-	3.3/3.0 (2.4)	131/149	150/150
														9.6/8.7	3.3/3.0 (2.4)	143/160	150/175

***NOTE:** Use higher value for calculation of MCA. Use lower value for calculation of MOP.

APPENDIX B ELECTRICAL DATA

Electrical Data

Model Number	Electrical Rating	Compressor			Outdoor Fan Motor			Indoor Fan Motor			Optional Electric Heat			Optional Powered Convienience Outlet	Optional Power Exhaust*	Power Supply	
		QTY	RLA	LRA	QTY	HP	FLA	QTY	HP	FLA	Part #	KW*	FLA	FLA	FLA	MCA	MOP
DSC1024D	460/3/60	2	6.4	55.1	2	0.33	0.85	1	2.4	5.4	-	-	-	-	-	21.5	25
											-	-	-	4.3	-	25.8	30
											-	-	-	-	1.2 (1.0)	22.7	25
											-	-	-	4.3	1.2 (1.0)	27.0	30
											EH*D-4M15	15.0	18.0	-	-	29.3	30
														4.3	-	34.7	35
														-	1.2 (1.0)	30.8	35
														4.3	1.2 (1.0)	36.2	40
											EH*D-4M30	30.0	36.1	-	-	51.9	60
														4.3	-	57.2	60
														-	1.2 (1.0)	53.4	60
														4.3	1.2 (1.0)	58.7	60
											EH*D-4M45	45.0	54.1	-	-	74.4	80
														4.3	-	79.8	80
														-	1.2 (1.0)	75.9	80
														4.3	1.2 (1.0)	81.3	90
DSC1024L	460/3/60	2	6.4	55.1	2	0.33	0.85	1	2.4	5.4	-	-	-	-	-	21.5	25
											-	-	-	4.3	-	25.8	30
											-	-	-	-	1.2 (1.0)	22.7	25
											-	-	-	4.3	1.2 (1.0)	27.0	30
											EH*D-4M15	15.0	18.0	-	-	29.3	30
														4.3	-	34.7	35
														-	1.2 (1.0)	30.8	35
														4.3	1.2 (1.0)	36.2	40
											EH*D-4M30	30.0	36.1	-	-	51.9	60
														4.3	-	57.2	60
														-	1.2 (1.0)	53.4	60
														4.3	1.2 (1.0)	58.7	60
											EH*D-4M45	45.0	54.1	-	-	74.4	80
														4.3	-	79.8	80
														-	1.2 (1.0)	75.9	80
														4.3	1.2 (1.0)	81.3	90
DSC1024W	460/3/60	2	6.4	55.1	2	0.33	0.85	1	2.4	5.4	-	-	-	-	-	21.5	25
											-	-	-	4.3	-	25.8	30
											-	-	-	-	1.2 (1.0)	22.7	25
											-	-	-	4.3	1.2 (1.0)	27.0	30
											EH*D-4M15	15.0	18.0	-	-	29.3	30
														4.3	-	34.7	35
														-	1.2 (1.0)	30.8	35
														4.3	1.2 (1.0)	36.2	40
											EH*D-4M30	30.0	36.1	-	-	51.9	60
														4.3	-	57.2	60
														-	1.2 (1.0)	53.4	60
														4.3	1.2 (1.0)	58.7	60
											EH*D-4M45	45.0	54.1	-	-	74.4	80
														4.3	-	79.8	80
														-	1.2 (1.0)	75.9	80
														4.3	1.2 (1.0)	81.3	90
DSC1027D	575/3/60	2	5.1	41.0	2	0.33	0.67	1	2.4	4.0	-	-	-	-	-	16.9	20
											-	-	-	3.5	-	20.4	25
											-	-	-	-	1.3	18.2	20
											-	-	-	3.5	1.3	21.7	25
											EH*D-7M15	15.0	14.4	-	-	23.0	25
														3.5	-	27.4	30
														-	1.3	24.7	25
														3.5	1.3	29.0	30
											EH*D-7M30	30.0	28.9	-	-	41.1	45
														3.5	-	45.5	50
														-	1.3	42.7	45
														3.5	1.3	47.1	50
											EH*D-7M45	45.0	43.3	-	-	59.1	60
														3.5	-	63.5	70
														-	1.3	60.8	70
														3.5	1.3	65.1	70
DSC1027L	575/3/60	2	5.1	41.0	2	0.33	0.67	1	2.4	4.0	-	-	-	-	-	16.9	20
											-	-	-	3.5	-	20.4	25
											-	-	-	-	1.3	18.2	20
											-	-	-	3.5	1.3	21.7	25
											EH*D-7M15	15.0	14.4	-	-	23.0	25
														3.5	-	27.4	30
														-	1.3	24.7	25
														3.5	1.3	29.0	30
											EH*D-7M30	30.0	28.9	-	-	41.1	45
														3.5	-	45.5	50
														-	1.3	42.7	45
														3.5	1.3	47.1	50
											EH*D-7M45	45.0	43.3	-	-	59.1	60
														3.5	-	63.5	70
														-	1.3	60.8	70
														3.5	1.3	65.1	70
DSC1027W	575/3/60	2	5.1	41.0	2	0.33	0.67	1	2.4	4.0	-	-	-	-	-	16.9	20
											-	-	-	3.5	-	20.4	25
											-	-	-	-	1.3	18.2	20
											-	-	-	3.5	1.3	21.7	25
											EH*D-7M15	15.0	14.4	-	-	23.0	25
														3.5	-	27.4	30
														-	1.3	24.7	25
														3.5	1.3	29.0	30
											EH*D-7M30	30.0	28.9	-	-	41.1	45
														3.5	-	45.5	50
														-	1.3	42.7	45
														3.5	1.3	47.1	50
											EH*D-7M45	45.0	43.3	-	-	59.1	60
														3.5	-	63.5	70
														-	1.3	60.8	70
														3.5	1.3	65.1	70

***NOTE:** Use higher value for calculation of MCA. Use lower value for calculation of MOP.

APPENDIX B ELECTRICAL DATA

Electrical Data

Model Number	Electrical Rating	Compressor			Outdoor Fan Motor			Indoor Fan Motor			Optional Electric Heat			Optional Powered Convienience Outlet	Optional Power Exhaust*	Power Supply	
		QTY	RLA	LRA	QTY	HP	FLA	QTY	HP	FLA	Part #	KW*	FLA	FLA	FLA	MCA	MOP
DSC1203D	208/230/3/60	2	17.3	155	2	0.33	2.0	1	2.4	8.0	-	-	-	-	-	50.9/50.9	60/60
											-	-	-	9.6/8.7	-	60.5/59.6	70/70
											-	-	-	-	3.3/3.0 (2.4)	54.2/53.9	70/70
											-	-	-	9.6/8.7	3.3/3.0 (2.4)	63.8/62.6	80/70
											EH*D-3M15	11.3/15.0	31.3/36.1	-	-	50.9/55.1	60/60
														9.6/8.7	-	61.1/66.0	70/70
														-	3.3/3.0 (2.4)	54.2/58.9	70/70
														9.6/8.7	3.3/3.0 (2.4)	65.2/69.7	80/70
											EH*D-3M30	22.5/30.0	62.5/72.2	-	-	88.2/100	90/110
														9.6/8.7	-	100/111	110/125
														-	3.3/3.0 (2.4)	92.3/104	100/110
														9.6/8.7	3.3/3.0 (2.4)	104/115	110/125
											EH*D-3M45	33.8/45.0	93.8/108	-	-	127/145	150/150
														9.6/8.7	-	139/156	150/175
														-	3.3/3.0 (2.4)	131/149	150/150
														9.6/8.7	3.3/3.0 (2.4)	143/160	150/175
DSC1203L	208/230/3/60	2	17.3	155	2	0.33	2.0	1	3.5	10.9	-	-	-	-	-	53.8/53.8	70/70
											-	-	-	9.6/8.7	-	63.4/62.5	80/70
											-	-	-	-	3.3/3.0 (2.4)	57.1/56.8	70/70
											-	-	-	9.6/8.7	3.3/3.0 (2.4)	66.7/65.5	80/80
											EH*D-3M15	11.3/15.0	31.3/36.1	-	-	53.8/58.7	70/70
														9.6/8.7	-	64.7/69.6	80/70
														-	3.3/3.0 (2.4)	57.1/62.5	70/70
														9.6/8.7	3.3/3.0 (2.4)	68.9/73.4	80/80
											EH*D-3M30	22.5/30.0	62.5/72.2	-	-	91.8/104	100/110
														9.6/8.7	-	104/115	110/125
														-	3.3/3.0 (2.4)	96.0/108	100/110
														9.6/8.7	3.3/3.0 (2.4)	108/118	110/125
											EH*D-3M45	33.8/45.0	93.8/108	-	-	131/149	150/150
														9.6/8.7	-	143/160	150/175
														-	3.3/3.0 (2.4)	135/153	150/175
														9.6/8.7	3.3/3.0 (2.4)	147/164	150/175
DSC1203W	208/230/3/60	2	17.3	155	2	0.33	2.0	1	3.5	10.9	-	-	-	-	-	53.8/53.8	70/70
											-	-	-	9.6/8.7	-	63.4/62.5	80/70
											-	-	-	-	3.3/3.0 (2.4)	57.1/56.8	70/70
											-	-	-	9.6/8.7	3.3/3.0 (2.4)	66.7/65.5	80/80
											EH*D-3M15	11.3/15.0	31.3/36.1	-	-	53.8/58.7	70/70
														9.6/8.7	-	64.7/69.6	80/70
														-	3.3/3.0 (2.4)	57.1/62.5	70/70
														9.6/8.7	3.3/3.0 (2.4)	68.9/73.4	80/80
											EH*D-3M30	22.5/30.0	62.5/72.2	-	-	91.8/104	100/110
														9.6/8.7	-	104/115	110/125
														-	3.3/3.0 (2.4)	96.0/108	100/110
														9.6/8.7	3.3/3.0 (2.4)	108/118	110/125
											EH*D-3M45	33.8/45.0	93.8/108	-	-	131/149	150/150
														9.6/8.7	-	143/160	150/175
														-	3.3/3.0 (2.4)	135/153	150/175
														9.6/8.7	3.3/3.0 (2.4)	147/164	150/175
DSC1204D	460/3/60	2	7.7	58.1	2	0.33	0.85	1	2.4	5.4	-	-	-	-	-	24.4	30
											-	-	-	4.3	-	28.7	35
											-	-	-	-	1.2 (1.0)	25.6	30
											-	-	-	4.3	1.2 (1.0)	29.9	35
											EH*D-4M15	15.0	18.0	-	-	29.3	30
														4.3	-	34.7	35
														-	1.2 (1.0)	30.8	35
														4.3	1.2 (1.0)	36.2	40
											EH*D-4M30	30.0	36.1	-	-	51.9	60
														4.3	-	57.2	60
														-	1.2 (1.0)	53.4	60
														4.3	1.2 (1.0)	58.7	60
											EH*D-4M45	45.0	54.1	-	-	74.4	80
														4.3	-	79.8	80
														-	1.2 (1.0)	75.9	80
														4.3	1.2 (1.0)	81.3	90
DSC1204L	460/3/60	2	7.7	58.1	2	0.33	0.85	1	3.5	7.2	-	-	-	-	-	26.2	30
											-	-	-	4.3	-	30.5	35
											-	-	-	-	1.2 (1.0)	27.4	30
											-	-	-	4.3	1.2 (1.0)	31.7	35
											EH*D-4M15	15.0	18.0	-	-	31.6	35
														4.3	-	36.9	40
														-	1.2 (1.0)	33.1	35
														4.3	1.2 (1.0)	38.4	40
											EH*D-4M30	30.0	36.1	-	-	54.1	60
														4.3	-	59.5	60
														-	1.2 (1.0)	55.6	60
														4.3	1.2 (1.0)	61.0	70
											EH*D-4M45	45.0	54.1	-	-	76.7	80
														4.3	-	82.0	90
														-	1.2 (1.0)	78.2	80
														4.3	1.2 (1.0)	83.5	90
DSC1204W	460/3/60	2	7.7	58.1	2	0.33	0.85	1	3.5	7.2	-	-	-	-	-	26.2	30
											-	-	-	4.3	-	30.5	35
											-	-	-	-	1.2 (1.0)	27.4	30
											-	-	-	4.3	1.2 (1.0)	31.7	35
											EH*D-4M15	15.0	18.0	-	-	31.6	35
														4.3	-	36.9	40
														-	1.2 (1.0)	33.1	35
														4.3	1.2 (1.0)	38.4	40
											EH*D-4M30	30.0	36.1	-	-	54.1	60
														4.3	-	59.5	60
														-	1.2 (1.0)	55.6	60
														4.3	1.2 (1.0)	61.0	70
											EH*D-4M45	45.0	54.1	-	-	76.7	80
														4.3	-	82.0	90
														-	1.2 (1.0)	78.2	80
														4.3	1.2 (1.0)	83.5	90

***NOTE:** Use higher value for calculation of MCA. Use lower value for calculation of MOP.

APPENDIX B ELECTRICAL DATA

Electrical Data

Model Number	Electrical Rating	Compressor			Outdoor Fan Motor			Indoor Fan Motor			Optional Electric Heat			Optional Powered Convienience Outlet	Optional Power Exhaust*	Power Supply	
		QTY	RLA	LRA	QTY	HP	FLA	QTY	HP	FLA	Part #	KW*	FLA	FLA	FLA	MCA	MOP
DSC1207D	575/3/60	2	7.0	47.8	2	0.33	0.67	1	2.4	4.0	-	-	-	-	-	21.2	25
											-	-	-	3.5	-	24.7	30
											-	-	-	-	1.3	22.5	25
											-	-	-	3.5	1.3	26.0	30
											EH*D-7M15	15.0	14.4	-	-	23.0	25
														3.5	-	27.4	30
														-	1.3	24.7	25
														3.5	1.3	29.0	30
											EH*D-7M30	30.0	28.9	-	-	41.1	45
														3.5	-	45.5	50
														-	1.3	42.7	45
														3.5	1.3	47.1	50
											EH*D-7M45	45.0	43.3	-	-	59.1	60
														3.5	-	63.5	70
														-	1.3	60.8	70
														3.5	1.3	65.1	70
DSC1207L	575/3/60	2	7.0	47.8	2	0.33	0.67	1	3.5	5.0	-	-	-	-	-	22.2	25
											-	-	-	3.5	-	25.7	30
											-	-	-	-	1.3	23.5	30
											-	-	-	3.5	1.3	27.0	30
											EH*D-7M15	15.0	14.4	-	-	24.3	25
														3.5	-	28.7	30
														-	1.3	25.9	30
														3.5	1.3	30.3	35
											EH*D-7M30	30.0	28.9	-	-	42.3	45
														3.5	-	46.7	50
														-	1.3	44.0	45
														3.5	1.3	48.3	50
											EH*D-7M45	45.0	43.3	-	-	60.4	70
														3.5	-	64.8	70
														-	1.3	62.0	70
														3.5	1.3	66.4	70
DSC1207W	575/3/60	2	7.0	47.8	2	0.33	0.67	1	3.5	5.0	-	-	-	-	-	22.2	25
											-	-	-	3.5	-	25.7	30
											-	-	-	-	1.3	23.5	30
											-	-	-	3.5	1.3	27.0	30
											EH*D-7M15	15.0	14.4	-	-	24.3	25
														3.5	-	28.7	30
														-	1.3	25.9	30
														3.5	1.3	30.3	35
											EH*D-7M30	30.0	28.9	-	-	42.3	45
														3.5	-	46.7	50
														-	1.3	44.0	45
														3.5	1.3	48.3	50
											EH*D-7M45	45.0	43.3	-	-	60.4	70
														3.5	-	64.8	70
														-	1.3	62.0	70
														3.5	1.3	66.4	70
DSC1503D	208/230/3/60	2	19.2	157	2	0.5	2.7	1	3.5	10.9	-	-	-	-	-	59.5/59.5	70/70
											-	-	-	9.6/8.7	-	69.1/68.2	80/80
											-	-	-	-	3.3/3.0 (2.4)	62.8/62.5	80/80
											-	-	-	9.6/8.7	3.3/3.0 (2.4)	72.4/71.2	90/80
											EH*D-3M15	11.3/15.0	31.3/36.1	-	-	59.5/59.5	70/70
														9.6/8.7	-	69.1/69.6	80/80
														-	3.3/3.0 (2.4)	62.8/62.5	80/80
														9.6/8.7	3.3/3.0 (2.4)	72.4/73.4	90/80
											EH*D-3M30	22.5/30.0	62.5/72.2	-	-	91.8/104	100/110
														9.6/8.7	-	104/115	110/125
														-	3.3/3.0 (2.4)	96.0/108	100/110
														9.6/8.7	3.3/3.0 (2.4)	108/118	110/125
											EH*D-3M45	33.8/45.0	93.8/108	-	-	131/149	150/150
														9.6/8.7	-	143/160	150/175
														-	3.3/3.0 (2.4)	135/153	150/175
														9.6/8.7	3.3/3.0 (2.4)	147/164	150/175
DSC1503L	208/230/3/60	2	19.2	157	2	0.5	2.7	1	5.0	14.5	-	-	-	-	-	63.1/63.1	80/80
											-	-	-	9.6/8.7	-	72.7/71.8	90/90
											-	-	-	-	3.3/3.0 (2.4)	66.4/66.1	80/80
											-	-	-	9.6/8.7	3.3/3.0 (2.4)	76.0/74.8	90/90
											EH*D-3M15	11.3/15.0	31.3/36.1	-	-	63.1/63.2	80/80
														9.6/8.7	-	72.7/74.1	90/90
														-	3.3/3.0 (2.4)	66.4/67.0	80/80
														9.6/8.7	3.3/3.0 (2.4)	76.0/77.9	90/90
											EH*D-3M30	22.5/30.0	62.5/72.2	-	-	96.3/108	100/110
														9.6/8.7	-	108/119	110/125
														-	3.3/3.0 (2.4)	100/112	110/125
														9.6/8.7	3.3/3.0 (2.4)	112/123	125/125
											EH*D-3M45	33.8/45.0	93.8/108	-	-	135/153	150/175
														9.6/8.7	-	147/164	150/175
														-	3.3/3.0 (2.4)	140/157	150/175
														9.6/8.7	3.3/3.0 (2.4)	152/168	175/175
DSC1503W	208/230/3/60	2	19.2	157	2	0.5	2.7	1	5.0	14.5	-	-	-	-	-	63.1/63.1	80/80
											-	-	-	9.6/8.7	-	72.7/71.8	90/90
											-	-	-	-	3.3/3.0 (2.4)	66.4/66.1	80/80
											-	-	-	9.6/8.7	3.3/3.0 (2.4)	76.0/74.8	90/90
											EH*D-3M15	11.3/15.0	31.3/36.1	-	-	63.1/63.2	80/80
														9.6/8.7	-	72.7/74.1	90/90
														-	3.3/3.0 (2.4)	66.4/67.0	80/80
														9.6/8.7	3.3/3.0 (2.4)	76.0/77.9	90/90
											EH*D-3M30	22.5/30.0	62.5/72.2	-	-	96.3/108	100/110
														9.6/8.7	-	108/119	110/125
														-	3.3/3.0 (2.4)	100/112	110/125
														9.6/8.7	3.3/3.0 (2.4)	112/123	125/125
											EH*D-3M45	33.8/45.0	93.8/108	-	-	135/153	150/175
														9.6/8.7	-	147/164	150/175
														-	3.3/3.0 (2.4)	140/157	150/175
														9.6/8.7	3.3/3.0 (2.4)	152/168	175/175

***NOTE:** Use higher value for calculation of MCA. Use lower value for calculation of MOP.

APPENDIX B ELECTRICAL DATA

Electrical Data

Model Number	Electrical Rating	Compressor			Outdoor Fan Motor			Indoor Fan Motor			Optional Electric Heat			Optional Powered Convienience Outlet	Optional Power Exhaust*	Power Supply	
		QTY	RLA	LRA	QTY	HP	FLA	QTY	HP	FLA	Part #	KW*	FLA	FLA	FLA	MCA	MOP
DSC1504D	460/3/60	2	9.0	74.8	2	0.5	1.4	1	3.5	7.2	-	-	-	-	-	30.2	35
											-	-	-	4.3	-	34.5	40
											-	-	-	-	1.2 (1.0)	31.4	40
											-	-	-	4.3	1.2 (1.0)	35.7	40
											EH*D-4M15	15.0	18.0	-	-	31.6	35
														4.3	-	36.9	40
														-	1.2 (1.0)	33.1	40
														4.3	1.2 (1.0)	38.4	40
											EH*D-4M30	30.0	36.1	-	-	54.1	60
														4.3	-	59.5	60
														-	1.2 (1.0)	55.6	60
														4.3	1.2 (1.0)	61.0	70
											EH*D-4M45	45.0	54.1	-	-	76.7	80
														4.3	-	82.0	90
														-	1.2 (1.0)	78.2	80
														4.3	1.2 (1.0)	83.5	90
DSC1504L	460/3/60	2	9.0	74.8	2	0.5	1.4	1	5.0	10.6	-	-	-	-	-	33.6	40
											-	-	-	4.3	-	37.9	45
											-	-	-	-	1.2 (1.0)	34.8	45
											-	-	-	4.3	1.2 (1.0)	39.1	45
											EH*D-4M15	15.0	18.0	-	-	35.8	40
														4.3	-	41.2	45
														-	1.2 (1.0)	37.3	45
														4.3	1.2 (1.0)	42.7	45
											EH*D-4M30	30.0	36.1	-	-	58.4	60
														4.3	-	63.7	70
														-	1.2 (1.0)	59.9	60
														4.3	1.2 (1.0)	65.2	70
											EH*D-4M45	45.0	54.1	-	-	80.9	90
														4.3	-	86.3	90
														-	1.2 (1.0)	82.4	90
														4.3	1.2 (1.0)	87.8	90
DSC1504W	460/3/60	2	9.0	74.8	2	0.5	1.4	1	5.0	10.6	-	-	-	-	-	33.6	40
											-	-	-	4.3	-	37.9	45
											-	-	-	-	1.2 (1.0)	34.8	45
											-	-	-	4.3	1.2 (1.0)	39.1	45
											EH*D-4M15	15.0	18.0	-	-	35.8	40
														4.3	-	41.2	45
														-	1.2 (1.0)	37.3	45
														4.3	1.2 (1.0)	42.7	45
											EH*D-4M30	30.0	36.1	-	-	58.4	60
														4.3	-	63.7	70
														-	1.2 (1.0)	59.9	60
														4.3	1.2 (1.0)	65.2	70
											EH*D-4M45	45.0	54.1	-	-	80.9	90
														4.3	-	86.3	90
														-	1.2 (1.0)	82.4	90
														4.3	1.2 (1.0)	87.8	90
DSC1507D	575/3/60	2	7.0	53.9	2	0.5	1.0	1	3.5	5.0	-	-	-	-	-	22.8	25
											-	-	-	3.5	-	26.3	30
											-	-	-	-	1.3	24.1	30
											-	-	-	3.5	1.3	27.6	30
											EH*D-7M15	15.0	14.4	-	-	24.3	25
														3.5	-	28.7	30
														-	1.3	25.9	30
														3.5	1.3	30.3	35
											EH*D-7M30	30.0	28.9	-	-	42.3	45
														3.5	-	46.7	50
														-	1.3	44.0	45
														3.5	1.3	48.3	50
											EH*D-7M45	45.0	43.3	-	-	60.4	70
														3.5	-	64.8	70
														-	1.3	62.0	70
														3.5	1.3	66.4	70
DSC1507L	575/3/60	2	7.0	53.9	2	0.5	1.0	1	5.0	7.2	-	-	-	-	-	25.0	30
											-	-	-	3.5	-	28.5	35
											-	-	-	-	1.3	26.3	30
											-	-	-	3.5	1.3	29.8	35
											EH*D-7M15	15.0	14.4	-	-	27.0	30
														3.5	-	31.4	35
														-	1.3	28.7	30
														3.5	1.3	33.0	35
											EH*D-7M30	30.0	28.9	-	-	45.1	50
														3.5	-	49.5	50
														-	1.3	46.7	50
														3.5	1.3	51.1	60
											EH*D-7M45	45.0	43.3	-	-	63.1	70
														3.5	-	67.5	70
														-	1.3	64.8	70
														3.5	1.3	69.1	70
DSC1507W	575/3/60	2	7.0	53.9	2	0.5	1.0	1	5.0	7.2	-	-	-	-	-	25.0	30
											-	-	-	3.5	-	28.5	35
											-	-	-	-	1.3	26.3	30
											-	-	-	3.5	1.3	29.8	35
											EH*D-7M15	15.0	14.4	-	-	27.0	30
														3.5	-	31.4	35
														-	1.3	28.7	30
														3.5	1.3	33.0	35
											EH*D-7M30	30.0	28.9	-	-	45.1	50
														3.5	-	49.5	50
														-	1.3	46.7	50
														3.5	1.3	51.1	60
											EH*D-7M45	45.0	43.3	-	-	63.1	70
														3.5	-	67.5	70
														-	1.3	64.8	70
														3.5	1.3	69.1	70

***NOTE:** Use higher value for calculation of MCA. Use lower value for calculation of MOP.

APPENDIX B ELECTRICAL DATA

Model Number	Electrical Rating	Compressor			Outdoor Fan Motor			Indoor Fan Motor			Optional Electric Heat			Optional Powered Convienience Outlet	Optional Power Exhaust*	Power Supply	
		QTY	RLA	LRA	QTY	HP	FLA	QTY	HP	FLA	Part #	KW*	FLA	FLA	FLA	MCA	MOP
DSH0903D	208/230/3/60	2	12.2	120	2	0.33	2.0	1	2.4	8.0	-	-	-	-	-	39.4/39.4	50/50
											-	-	-	9.6/8.7	-	49.0/48.1	60/60
											-	-	-	-	3.3/3.0 (2.4)	42.7/42.4	50/50
											-	-	-	9.6/8.7	3.3/3.0 (2.4)	52.3/51.1	60/60
											EH*D-3M15	11.3/15.0	31.3/36.1	-	-	78.5/84.5	80/90
														9.6/8.7	-	88.1/93.2	90/100
														-	3.3/3.0 (2.4)	81.8/87.5	90/90
														9.6/8.7	3.3/3.0 (2.4)	91.4/96.2	100/100
											EH*D-3M30	22.5/30.0	62.5/72.2	-	-	118/130	125/150
														9.6/8.7	-	127/138	150/150
														-	3.3/3.0 (2.4)	121/133	125/150
														9.6/8.7	3.3/3.0 (2.4)	130/141	150/150
											EH*D-3M45	33.8/45.0	93.8/108	-	-	157/175	175/175
														9.6/8.7	-	166/183	175/200
														-	3.3/3.0 (2.4)	160/178	175/200
														9.6/8.7	3.3/3.0 (2.4)	170/186	175/200
DSH0903L	208/230/3/60	2	12.2	120	2	0.33	2.0	1	2.4	8.0	-	-	-	-	-	39.4/39.4	50/50
											-	-	-	9.6/8.7	-	49.0/48.1	60/60
											-	-	-	-	3.3/3.0 (2.4)	42.7/42.4	50/50
											-	-	-	9.6/8.7	3.3/3.0 (2.4)	52.3/51.1	60/60
											EH*D-3M15	11.3/15.0	31.3/36.1	-	-	78.5/84.5	80/90
														9.6/8.7	-	88.1/93.2	90/100
														-	3.3/3.0 (2.4)	81.8/87.5	90/90
														9.6/8.7	3.3/3.0 (2.4)	91.4/96.2	100/100
											EH*D-3M30	22.5/30.0	62.5/72.2	-	-	118/130	125/150
														9.6/8.7	-	127/138	150/150
														-	3.3/3.0 (2.4)	121/133	125/150
														9.6/8.7	3.3/3.0 (2.4)	130/141	150/150
											EH*D-3M45	33.8/45.0	93.8/108	-	-	157/175	175/175
														9.6/8.7	-	166/183	175/200
														-	3.3/3.0 (2.4)	160/178	175/200
														9.6/8.7	3.3/3.0 (2.4)	170/186	175/200
DSH0903W	208/230/3/60	2	12.2	120	2	0.33	2.0	1	3.5	10.9	-	-	-	-	-	42.3/42.3	50/50
											-	-	-	9.6/8.7	-	51.9/51.0	60/60
											-	-	-	-	3.3/3.0 (2.4)	45.6/45.3	50/50
											-	-	-	9.6/8.7	3.3/3.0 (2.4)	55.2/54.0	60/60
											EH*D-3M15	11.3/15.0	31.3/36.1	-	-	81.4/87.4	90/90
														9.6/8.7	-	91.0/96.1	100/100
														-	3.3/3.0 (2.4)	84.7/90.4	90/100
														9.6/8.7	3.3/3.0 (2.4)	94.3/99.1	100/100
											EH*D-3M30	22.5/30.0	62.5/72.2	-	-	120/132	125/150
														9.6/8.7	-	130/141	150/150
														-	3.3/3.0 (2.4)	124/135	125/150
														9.6/8.7	3.3/3.0 (2.4)	133/144	150/150
											EH*D-3M45	33.8/45.0	93.8/108	-	-	160/178	175/200
														9.6/8.7	-	169/186	175/200
														-	3.3/3.0 (2.4)	163/181	175/200
														9.6/8.7	3.3/3.0 (2.4)	172/189	175/200
DSH0904D	460/3/60	2	5.8	55.1	2	0.33	0.85	1	2.4	5.4	-	-	-	-	-	20.1	25
											-	-	-	4.3	-	24.4	30
											-	-	-	-	1.2 (1.0)	21.3	25
											-	-	-	4.3	1.2 (1.0)	25.6	30
											EH*D-4M15	15.0	18.0	-	-	42.6	45
														4.3	-	46.9	50
														-	1.2 (1.0)	43.8	45
														4.3	1.2 (1.0)	48.1	50
											EH*D-4M30	30.0	36.1	-	-	65.2	70
														4.3	-	69.5	70
														-	1.2 (1.0)	66.4	70
														4.3	1.2 (1.0)	70.7	80
											EH*D-4M45	45.0	54.1	-	-	87.7	90
														4.3	-	92.0	100
														-	1.2 (1.0)	88.9	90
														4.3	1.2 (1.0)	93.2	100
DSH0904L	460/3/60	2	5.8	55.1	2	0.33	0.85	1	2.4	5.4	-	-	-	-	-	20.1	25
											-	-	-	4.3	-	24.4	30
											-	-	-	-	1.2 (1.0)	21.3	25
											-	-	-	4.3	1.2 (1.0)	25.6	30
											EH*D-4M15	15.0	18.0	-	-	42.6	45
														4.3	-	46.9	50
														-	1.2 (1.0)	43.8	45
														4.3	1.2 (1.0)	48.1	50
											EH*D-4M30	30.0	36.1	-	-	65.2	70
														4.3	-	69.5	70
														-	1.2 (1.0)	66.4	70
														4.3	1.2 (1.0)	70.7	80
											EH*D-4M45	45.0	54.1	-	-	87.7	90
														4.3	-	92.0	100
														-	1.2 (1.0)	88.9	90
														4.3	1.2 (1.0)	93.2	100
DSH0904W	460/3/60	2	5.8	55.1	2	0.33	0.85	1	3.5	7.2	-	-	-	-	-	21.9	25
											-	-	-	4.3	-	26.2	30
											-	-	-	-	1.2 (1.0)	23.1	30
											-	-	-	4.3	1.2 (1.0)	27.4	30
											EH*D-4M15	15.0	18.0	-	-	44.4	45
														4.3	-	48.7	50
														-	1.2 (1.0)	45.6	50
														4.3	1.2 (1.0)	49.9	50
											EH*D-4M30	30.0	36.1	-	-	67.0	70
														4.3	-	71.3	80
														-	1.2 (1.0)	68.2	70
														4.3	1.2 (1.0)	72.5	80
											EH*D-4M45	45.0	54.1	-	-	89.5	90
														4.3	-	93.8	100
														-	1.2 (1.0)	90.7	100
														4.3	1.2 (1.0)	95.0	100

***NOTE:** Use higher value for calculation of MCA. Use lower value for calculation of MOP.

APPENDIX B ELECTRICAL DATA

Model Number	Electrical Rating	Compressor			Outdoor Fan Motor			Indoor Fan Motor			Optional Electric Heat			Optional Powered Convienience Outlet	Optional Power Exhaust*	Power Supply	
		QTY	RLA	LRA	QTY	HP	FLA	QTY	HP	FLA	Part #	KW*	FLA	FLA	FLA	MCA	MOP
DSH0907D	575/3/60	2	5.8	41.0	2	0.33	0.67	1	2.4	4.0	-	-	-	-	-	18.3	20
											-	-	-	3.5	-	21.8	25
											-	-	-	-	1.3	19.6	25
											-	-	-	3.5	1.3	23.1	25
											EH*D-7M15	15.0	14.4	-	-	36.3	40
														3.5	-	39.8	40
														-	1.3	37.6	40
														3.5	1.3	41.1	45
											EH*D-7M30	30.0	28.9	-	-	54.4	60
														3.5	-	57.9	60
														-	1.3	55.7	60
														3.5	1.3	59.2	60
											EH*D-7M45	45.0	43.3	-	-	72.4	80
														3.5	-	75.9	80
														-	1.3	73.7	80
														3.5	1.3	77.2	80
DSH0907L	575/3/60	2	5.8	41.0	2	0.33	0.67	1	2.4	4.0	-	-	-	-	-	18.3	20
											-	-	-	3.5	-	21.8	25
											-	-	-	-	1.3	19.6	25
											-	-	-	3.5	1.3	23.1	25
											EH*D-7M15	15.0	14.4	-	-	36.3	40
														3.5	-	39.8	40
														-	1.3	37.6	40
														3.5	1.3	41.1	45
											EH*D-7M30	30.0	28.9	-	-	54.4	60
														3.5	-	57.9	60
														-	1.3	55.7	60
														3.5	1.3	59.2	60
											EH*D-7M45	45.0	43.3	-	-	72.4	80
														3.5	-	75.9	80
														-	1.3	73.7	80
														3.5	1.3	77.2	80
DSH0907W	575/3/60	2	5.8	41.0	2	0.33	0.67	1	3.5	5.0	-	-	-	-	-	19.3	25
											-	-	-	3.5	-	22.8	25
											-	-	-	-	1.3	20.6	25
											-	-	-	3.5	1.3	24.1	25
											EH*D-7M15	15.0	14.4	-	-	37.3	40
														3.5	-	40.8	45
														-	1.3	38.6	40
														3.5	1.3	42.1	45
											EH*D-7M30	30.0	28.9	-	-	55.4	60
														3.5	-	58.9	60
														-	1.3	56.7	60
														3.5	1.3	60.2	70
											EH*D-7M45	45.0	43.3	-	-	73.4	80
														3.5	-	76.9	80
														-	1.3	74.7	80
														3.5	1.3	78.2	80
DSH1023D	208/230/3/60	2	14.1	120	2	0.33	2.0	1	2.4	8.0	-	-	-	-	-	43.7/43.7	50/50
											-	-	-	9.6/8.7	-	53.3/52.4	60/60
											-	-	-	-	3.3/3.0 (2.4)	47.0/46.7	60/60
											-	-	-	9.6/8.7	3.3/3.0 (2.4)	56.6/55.4	60/60
											EH*D-3M15	11.3/15.0	31.3/36.1	-	-	82.8/88.8	90/90
														9.6/8.7	-	92.4/97.5	100/100
														-	3.3/3.0 (2.4)	86.1/91.8	90/100
														9.6/8.7	3.3/3.0 (2.4)	95.7/100	100/110
											EH*D-3M30	22.5/30.0	62.5/72.2	-	-	122/134	125/150
														9.6/8.7	-	131/143	150/150
														-	3.3/3.0 (2.4)	125/137	150/150
														9.6/8.7	3.3/3.0 (2.4)	135/146	150/150
											EH*D-3M45	33.8/45.0	93.8/108	-	-	161/179	175/200
														9.6/8.7	-	171/188	175/200
														-	3.3/3.0 (2.4)	164/182	175/200
														9.6/8.7	3.3/3.0 (2.4)	174/191	175/200
DSH1023L	208/230/3/60	2	14.1	120	2	0.33	2.0	1	2.4	8.0	-	-	-	-	-	43.7/43.7	50/50
											-	-	-	9.6/8.7	-	53.3/52.4	60/60
											-	-	-	-	3.3/3.0 (2.4)	47.0/46.7	60/60
											-	-	-	9.6/8.7	3.3/3.0 (2.4)	56.6/55.4	60/60
											EH*D-3M15	11.3/15.0	31.3/36.1	-	-	82.8/88.8	90/90
														9.6/8.7	-	92.4/97.5	100/100
														-	3.3/3.0 (2.4)	86.1/91.8	90/100
														9.6/8.7	3.3/3.0 (2.4)	95.7/100	100/110
											EH*D-3M30	22.5/30.0	62.5/72.2	-	-	122/134	125/150
														9.6/8.7	-	131/143	150/150
														-	3.3/3.0 (2.4)	125/137	150/150
														9.6/8.7	3.3/3.0 (2.4)	135/146	150/150
											EH*D-3M45	33.8/45.0	93.8/108	-	-	161/179	175/200
														9.6/8.7	-	171/188	175/200
														-	3.3/3.0 (2.4)	164/182	175/200
														9.6/8.7	3.3/3.0 (2.4)	174/191	175/200
DSH1023W	208/230/3/60	2	14.1	120	2	0.33	2.0	1	3.5	10.9	-	-	-	-	-	46.6/46.6	60/60
											-	-	-	9.6/8.7	-	56.2/55.3	70/60
											-	-	-	-	3.3/3.0 (2.4)	49.9/49.6	60/60
											-	-	-	9.6/8.7	3.3/3.0 (2.4)	59.5/58.3	70/70
											EH*D-3M15	11.3/15.0	31.3/36.1	-	-	85.7/91.7	90/100
														9.6/8.7	-	95.3/100	100/110
														-	3.3/3.0 (2.4)	89.0/94.7	90/100
														9.6/8.7	3.3/3.0 (2.4)	98.6/103	100/110
											EH*D-3M30	22.5/30.0	62.5/72.2	-	-	125/137	125/150
														9.6/8.7	-	134/145	150/150
														-	3.3/3.0 (2.4)	128/140	150/150
														9.6/8.7	3.3/3.0 (2.4)	138/148	150/150
											EH*D-3M45	33.8/45.0	93.8/108	-	-	164/182	175/200
														9.6/8.7	-	173/191	175/200
														-	3.3/3.0 (2.4)	167/185	175/200
														9.6/8.7	3.3/3.0 (2.4)	177/194	200/200

***NOTE:** Use higher value for calculation of MCA. Use lower value for calculation of MOP.

APPENDIX B ELECTRICAL DATA

Model Number	Electrical Rating	Compressor			Outdoor Fan Motor			Indoor Fan Motor			Optional Electric Heat			Optional Powered Convienience Outlet	Optional Power Exhaust*	Power Supply	
		QTY	RLA	LRA	QTY	HP	FLA	QTY	HP	FLA	Part #	KW*	FLA	FLA	FLA	MCA	MOP
DSH1024D	460/3/60	2	6.4	55.1	2	0.33	0.85	1	2.4	5.4	-	-	-	-	-	21.5	25
											-	-	-	4.3	-	25.8	30
											-	-	-	-	1.2 (1.0)	22.7	25
											-	-	-	4.3	1.2 (1.0)	27.0	30
											EH*D-4M15	15.0	18.0	-	-	44.1	45
														4.3	-	48.4	50
														-	1.2 (1.0)	45.3	50
														4.3	1.2 (1.0)	49.6	50
											EH*D-4M30	30.0	36.1	-	-	66.6	70
														4.3	-	70.9	80
														-	1.2 (1.0)	67.8	70
														4.3	1.2 (1.0)	72.1	80
											EH*D-4M45	45.0	54.1	-	-	89.2	90
														4.3	-	93.5	100
														-	1.2 (1.0)	90.4	100
														4.3	1.2 (1.0)	94.7	100
DSH1024L	460/3/60	2	6.4	55.1	2	0.33	0.85	1	2.4	5.4	-	-	-	-	-	21.5	25
											-	-	-	4.3	-	25.8	30
											-	-	-	-	1.2 (1.0)	22.7	25
											-	-	-	4.3	1.2 (1.0)	27.0	30
											EH*D-4M15	15.0	18.0	-	-	44.1	45
														4.3	-	48.4	50
														-	1.2 (1.0)	45.3	50
														4.3	1.2 (1.0)	49.6	50
											EH*D-4M30	30.0	36.1	-	-	66.6	70
														4.3	-	70.9	80
														-	1.2 (1.0)	67.8	70
														4.3	1.2 (1.0)	72.1	80
											EH*D-4M45	45.0	54.1	-	-	89.2	90
														4.3	-	93.5	100
														-	1.2 (1.0)	90.4	100
														4.3	1.2 (1.0)	94.7	100
DSH1024W	460/3/60	2	6.4	55.1	2	0.33	0.85	1	3.5	7.2	-	-	-	-	-	23.3	30
											-	-	-	4.3	-	27.6	35
											-	-	-	-	1.2 (1.0)	24.5	30
											-	-	-	4.3	1.2 (1.0)	28.8	35
											EH*D-4M15	15.0	18.0	-	-	45.9	50
														4.3	-	50.2	60
														-	1.2 (1.0)	47.1	50
														4.3	1.2 (1.0)	51.4	60
											EH*D-4M30	30.0	36.1	-	-	68.4	70
														4.3	-	72.7	80
														-	1.2 (1.0)	69.6	70
														4.3	1.2 (1.0)	73.9	80
											EH*D-4M45	45.0	54.1	-	-	91.0	100
														4.3	-	95.3	100
														-	1.2 (1.0)	92.2	100
														4.3	1.2 (1.0)	96.5	100
DSH1027D	575/3/60	2	5.1	41.0	2	0.33	0.67	1	2.4	4.0	-	-	-	-	-	16.9	20
											-	-	-	3.5	-	20.4	25
											-	-	-	-	1.3	18.2	20
											-	-	-	3.5	1.3	21.7	25
											EH*D-7M15	15.0	14.4	-	-	34.9	35
														3.5	-	38.4	40
														-	1.3	36.2	40
														3.5	1.3	39.7	40
											EH*D-7M30	30.0	28.9	-	-	52.9	60
														3.5	-	56.4	60
														-	1.3	54.2	60
														3.5	1.3	57.7	60
											EH*D-7M45	45.0	43.3	-	-	71.0	80
														3.5	-	74.5	80
														-	1.3	72.3	80
														3.5	1.3	75.8	80
DSH1027L	575/3/60	2	5.1	41.0	2	0.33	0.67	1	2.4	4.0	-	-	-	-	-	16.9	20
											-	-	-	3.5	-	20.4	25
											-	-	-	-	1.3	18.2	20
											-	-	-	3.5	1.3	21.7	25
											EH*D-7M15	15.0	14.4	-	-	34.9	35
														3.5	-	38.4	40
														-	1.3	36.2	40
														3.5	1.3	39.7	40
											EH*D-7M30	30.0	28.9	-	-	52.9	60
														3.5	-	56.4	60
														-	1.3	54.2	60
														3.5	1.3	57.7	60
											EH*D-7M45	45.0	43.3	-	-	71.0	80
														3.5	-	74.5	80
														-	1.3	72.3	80
														3.5	1.3	75.8	80
DSH1027W	575/3/60	2	5.1	41.0	2	0.33	0.67	1	3.5	5.0	-	-	-	-	-	17.9	20
											-	-	-	3.5	-	21.4	25
											-	-	-	-	1.3	19.2	20
											-	-	-	3.5	1.3	22.7	25
											EH*D-7M15	15.0	14.4	-	-	35.9	40
														3.5	-	39.4	40
														-	1.3	37.2	40
														3.5	1.3	40.7	45
											EH*D-7M30	30.0	28.9	-	-	53.9	60
														3.5	-	57.4	60
														-	1.3	55.2	60
														3.5	1.3	58.7	60
											EH*D-7M45	45.0	43.3	-	-	72.0	80
														3.5	-	75.5	80
														-	1.3	73.3	80
														3.5	1.3	76.8	80

***NOTE:** Use higher value for calculation of MCA. Use lower value for calculation of MOP.

APPENDIX B ELECTRICAL DATA

Model Number	Electrical Rating	Compressor			Outdoor Fan Motor			Indoor Fan Motor			Optional Electric Heat			Optional Powered Convienience Outlet	Optional Power Exhaust*	Power Supply	
		QTY	RLA	LRA	QTY	HP	FLA	QTY	HP	FLA	Part #	KW*	FLA	FLA	FLA	MCA	MOP
DSH1203D	208/230/3/60	2	17.3	155	2	0.5	2.7	1	3.5	10.9	-	-	-	-	-	55.2/55.2	70/70
											-	-	-	9.6/8.7	-	64.8/63.9	80/80
											-	-	-	-	3.3/3.0 (2.4)	58.5/58.2	70/70
											-	-	-	9.6/8.7	3.3/3.0 (2.4)	68.1/66.9	80/80
											EH*D-3M15	11.3/15.0	31.3/36.1	-	-	94.3/100	100/110
														9.6/8.7	-	104/109	110/110
														-	3.3/3.0 (2.4)	97.6/103	100/110
														9.6/8.7	3.3/3.0 (2.4)	107/112	110/125
											EH*D-3M30	22.5/30.0	62.5/72.2	-	-	133/145	150/150
														9.6/8.7	-	143/154	150/175
														-	3.3/3.0 (2.4)	137/148	150/150
														9.6/8.7	3.3/3.0 (2.4)	146/157	150/175
											EH*D-3M45	33.8/45.0	93.8/108	-	-	172/190	175/200
														9.6/8.7	-	182/199	200/200
														-	3.3/3.0 (2.4)	176/193	200/200
														9.6/8.7	3.3/3.0 (2.4)	185/202	200/225
DSH1203L	208/230/3/60	2	17.3	155	2	0.5	2.7	1	3.5	10.9	-	-	-	-	-	55.2/55.2	70/70
											-	-	-	9.6/8.7	-	64.8/63.9	80/80
											-	-	-	-	3.3/3.0 (2.4)	58.5/58.2	70/70
											-	-	-	9.6/8.7	3.3/3.0 (2.4)	68.1/66.9	80/80
											EH*D-3M15	11.3/15.0	31.3/36.1	-	-	94.3/100	100/110
														9.6/8.7	-	104/109	110/110
														-	3.3/3.0 (2.4)	97.6/103	100/110
														9.6/8.7	3.3/3.0 (2.4)	107/112	110/125
											EH*D-3M30	22.5/30.0	62.5/72.2	-	-	133/145	150/150
														9.6/8.7	-	143/154	150/175
														-	3.3/3.0 (2.4)	137/148	150/150
														9.6/8.7	3.3/3.0 (2.4)	146/157	150/175
											EH*D-3M45	33.8/45.0	93.8/108	-	-	172/190	175/200
														9.6/8.7	-	182/199	200/200
														-	3.3/3.0 (2.4)	176/193	200/200
														9.6/8.7	3.3/3.0 (2.4)	185/202	200/225
DSH1203W	208/230/3/60	2	17.3	155	2	0.5	2.7	1	5.0	14.5	-	-	-	-	-	58.8/58.8	70/70
											-	-	-	9.6/8.7	-	68.4/67.5	80/80
											-	-	-	-	3.3/3.0 (2.4)	62.1/61.8	70/70
											-	-	-	9.6/8.7	3.3/3.0 (2.4)	71.7/70.5	80/80
											EH*D-3M15	11.3/15.0	31.3/36.1	-	-	97.9/104	100/110
														9.6/8.7	-	107/113	110/125
														-	3.3/3.0 (2.4)	101/107	110/110
														9.6/8.7	3.3/3.0 (2.4)	111/116	125/125
											EH*D-3M30	22.5/30.0	62.5/72.2	-	-	137/149	150/150
														9.6/8.7	-	147/158	150/175
														-	3.3/3.0 (2.4)	140/152	150/175
														9.6/8.7	3.3/3.0 (2.4)	150/161	150/175
											EH*D-3M45	33.8/45.0	93.8/108	-	-	176/194	200/200
														9.6/8.7	-	186/203	200/225
														-	3.3/3.0 (2.4)	179/197	200/200
														9.6/8.7	3.3/3.0 (2.4)	189/206	200/225
DSH1204D	460/3/60	2	7.7	58.1	2	0.5	1.4	1	3.5	7.2	-	-	-	-	-	27.3	30
											-	-	-	4.3	-	31.6	35
											-	-	-	-	1.2 (1.0)	28.5	35
											-	-	-	4.3	1.2 (1.0)	32.8	40
											EH*D-4M15	15.0	18.0	-	-	49.8	50
														4.3	-	54.1	60
														-	1.2 (1.0)	51.0	60
														4.3	1.2 (1.0)	55.3	60
											EH*D-4M30	30.0	36.1	-	-	72.4	80
														4.3	-	76.7	80
														-	1.2 (1.0)	73.6	80
														4.3	1.2 (1.0)	77.9	80
											EH*D-4M45	45.0	54.1	-	-	94.9	100
														4.3	-	99.2	100
														-	1.2 (1.0)	96.1	100
														4.3	1.2 (1.0)	100	110
DSH1204L	460/3/60	2	7.7	58.1	2	0.5	1.4	1	3.5	7.2	-	-	-	-	-	27.3	30
											-	-	-	4.3	-	31.6	35
											-	-	-	-	1.2 (1.0)	28.5	35
											-	-	-	4.3	1.2 (1.0)	32.8	40
											EH*D-4M15	15.0	18.0	-	-	49.8	50
														4.3	-	54.1	60
														-	1.2 (1.0)	51.0	60
														4.3	1.2 (1.0)	55.3	60
											EH*D-4M30	30.0	36.1	-	-	72.4	80
														4.3	-	76.7	80
														-	1.2 (1.0)	73.6	80
														4.3	1.2 (1.0)	77.9	80
											EH*D-4M45	45.0	54.1	-	-	94.9	100
														4.3	-	99.2	100
														-	1.2 (1.0)	96.1	100
														4.3	1.2 (1.0)	100	110
DSH1204W	460/3/60	2	7.7	58.1	2	0.5	1.4	1	5.0	10.6	-	-	-	-	-	30.7	40
											-	-	-	4.3	-	35.0	45
											-	-	-	-	1.2 (1.0)	31.9	40
											-	-	-	4.3	1.2 (1.0)	36.2	45
											EH*D-4M15	15.0	18.0	-	-	53.2	60
														4.3	-	57.5	60
														-	1.2 (1.0)	54.4	60
														4.3	1.2 (1.0)	58.7	60
											EH*D-4M30	30.0	36.1	-	-	75.8	80
														4.3	-	80.1	90
														-	1.2 (1.0)	77.0	80
														4.3	1.2 (1.0)	81.3	90
											EH*D-4M45	45.0	54.1	-	-	98.3	100
														4.3	-	103	110
														-	1.2 (1.0)	99.5	100
														4.3	1.2 (1.0)	104	110

***NOTE:** Use higher value for calculation of MCA. Use lower value for calculation of MOP.

APPENDIX B ELECTRICAL DATA

Model Number	Electrical Rating	Compressor			Outdoor Fan Motor			Indoor Fan Motor			Optional Electric Heat			Optional Powered Convienience Outlet	Optional Power Exhaust*	Power Supply	
		QTY	RLA	LRA	QTY	HP	FLA	QTY	HP	FLA	Part #	KW*	FLA	FLA	FLA	MCA	MOP
DSH1207D	575/3/60	2	7.0	47.8	2	0.5	1.0	1	3.5	5.0	-	-	-	-	-	22.8	25
											-	-	-	3.5	-	26.3	30
											-	-	-	-	1.3	24.1	30
											-	-	-	3.5	1.3	27.6	30
											EH*D-7M15	15.0	14.4	-	-	40.9	45
														3.5	-	44.4	45
														-	1.3	42.2	45
														3.5	1.3	45.7	50
											EH*D-7M30	30.0	28.9	-	-	58.9	60
														3.5	-	62.4	70
														-	1.3	60.2	70
														3.5	1.3	63.7	70
											EH*D-7M45	45.0	43.3	-	-	77.0	80
														3.5	-	80.5	90
														-	1.3	78.3	80
														3.5	1.3	81.8	90
DSH1207L	575/3/60	2	7.0	47.8	2	0.5	1.0	1	3.5	5.0	-	-	-	-	-	22.8	25
											-	-	-	3.5	-	26.3	30
											-	-	-	-	1.3	24.1	30
											-	-	-	3.5	1.3	27.6	30
											EH*D-7M15	15.0	14.4	-	-	40.9	45
														3.5	-	44.4	45
														-	1.3	42.2	45
														3.5	1.3	45.7	50
											EH*D-7M30	30.0	28.9	-	-	58.9	60
														3.5	-	62.4	70
														-	1.3	60.2	70
														3.5	1.3	63.7	70
											EH*D-7M45	45.0	43.3	-	-	77.0	80
														3.5	-	80.5	90
														-	1.3	78.3	80
														3.5	1.3	81.8	90
DSH1207W	575/3/60	2	7.0	47.8	2	0.5	1.0	1	5.0	7.2	-	-	-	-	-	25.0	30
											-	-	-	3.5	-	28.5	35
											-	-	-	-	1.3	26.3	30
											-	-	-	3.5	1.3	29.8	35
											EH*D-7M15	15.0	14.4	-	-	43.1	45
														3.5	-	46.6	50
														-	1.3	44.4	45
														3.5	1.3	47.9	50
											EH*D-7M30	30.0	28.9	-	-	61.1	70
														3.5	-	64.6	70
														-	1.3	62.4	70
														3.5	1.3	65.9	70
											EH*D-7M45	45.0	43.3	-	-	79.2	80
														3.5	-	82.7	90
														-	1.3	80.5	90
														3.5	1.3	84.0	90

***NOTE:** Use higher value for calculation of MCA. Use lower value for calculation of MOP.

APPENDIX C UNIT DIMENSIONS

Models	Dimension "A" in.
DSC090-150	54-5/8
DSH090-120	54-5/8

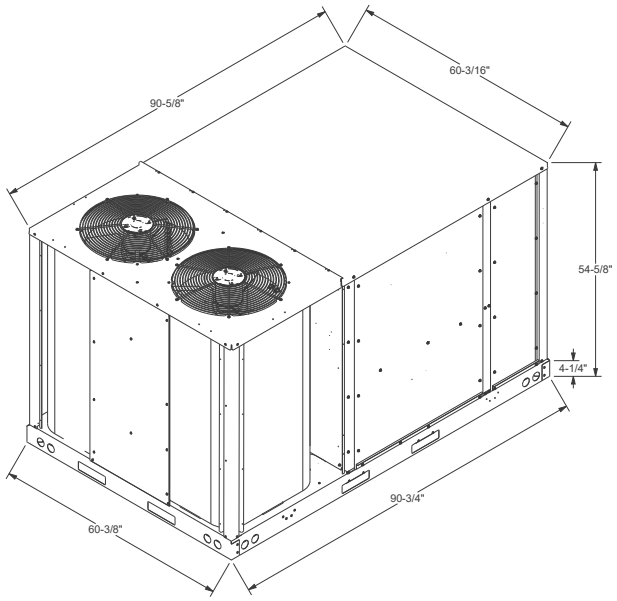

Figure 14

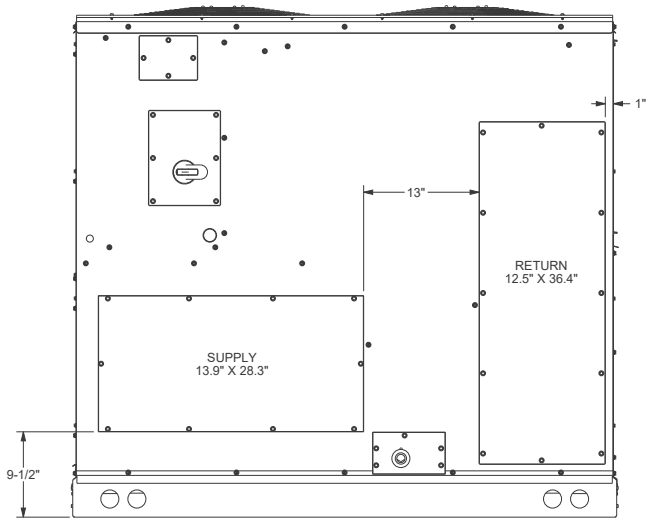

Horizontal Discharge
Figure 13

NOTE

For horizontal discharge, remove supply and return duct cover panels from the end of the unit. Save all washered screws. According to the model size, remove (6 or 8) factory supplied panel clips that are secured to the base pan, behind the filter access panel. With the insulated side of the panel facing up, attach the clips. Place the provided gasket material completely around the perimeter of the clip side on both panels. Place the assembled panels over the supply and return duct openings in the base pan and push down to snap panels into place. Ensure the panel is evenly seated on the flanges around the duct openings and the gasket is creating a good seal.

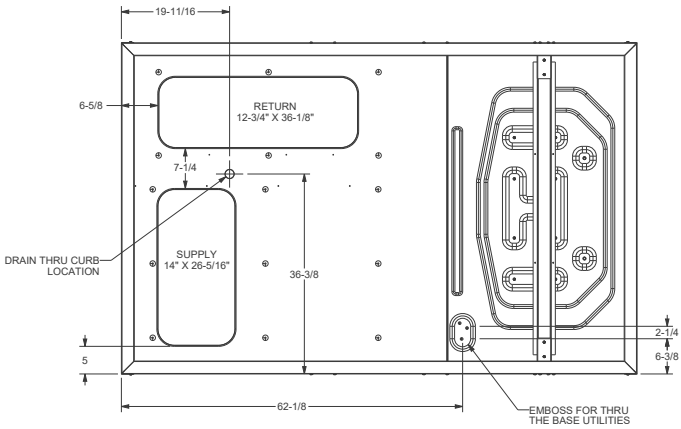

Vertical Discharge (Bottom of Unit)
Figure 15

NOTE: Refer to IOD-7082 included in the literature pack for installing horizontal duct covers.

APPENDIX D MIN-MAX AIRFLOW

AIR FLOW FOR ELECTRIC HEAT

UNIT	HEATER KIT MODEL NUMBER	Kw	MINIMUM CFM	MAXIMUM CFM
7.5 ton	EH*D-*M15	15	2400	4225
	EH*D-*M30	30		
	EH*D-*M45	45		
8.5 ton	EH*D-*M15	15	2750	4425
	EH*D-*M30	30		
	EH*D-*M45	45		
10 ton	EH*D-*M15	15	3200	5275
	EH*D-*M30	30		
	EH*D-*M45	45		
12.5 ton	EH*D-*M15	15	3750	6025
	EH*D-*M30	30		
	EH*D-*M45	45		

HEATER KIT MODEL NUMBER NOMENCLATURE

EH	X	D	-	3	M	15
1	2	3		4	5	6, 7

Electric

Heater

- **X** Staged
- **S** SCR (modulating)

Drive System

- **B** Belt Drive
- **D** Direct Drive

Voltage

- **1** 208-230/1/60 Single phase 60 Hz
- **3** 208-230/3/60 Three phase 60 Hz
- **4** 460/3/60 Three phase 60 Hz
- **7** 575/3/60 Three phase 60 Hz

Chassis

- **S** Small
- **M** Medium
- **L** Large

Kilowatt

- **10** 10 KW
- **15** 15 KW
- **20** 20 KW
- **30** 30 KW
- **45** 45 KW
- **60** 60 KW

NOTE: ELECTRIC HEAT KIT INSTALLATIONS WHERE LINE VOLTAGE IS GREATER THAN 106% OF NOMINAL MAY REQUIRE ADDITIONAL AIRFLOW TO AVOID NUISANCE TRIPPING OF THE PRIMARY THERMAL LIMITS

MODELS	COOLING MINIMUM SCFM	COOLING MAXIMUM SCFM
DSC/DSH090	2400	4225
DSC/DSH102	2750	4425
DSC/DSH120	3200	5275
DSC150	3750	6025

WIRING DIAGRAM

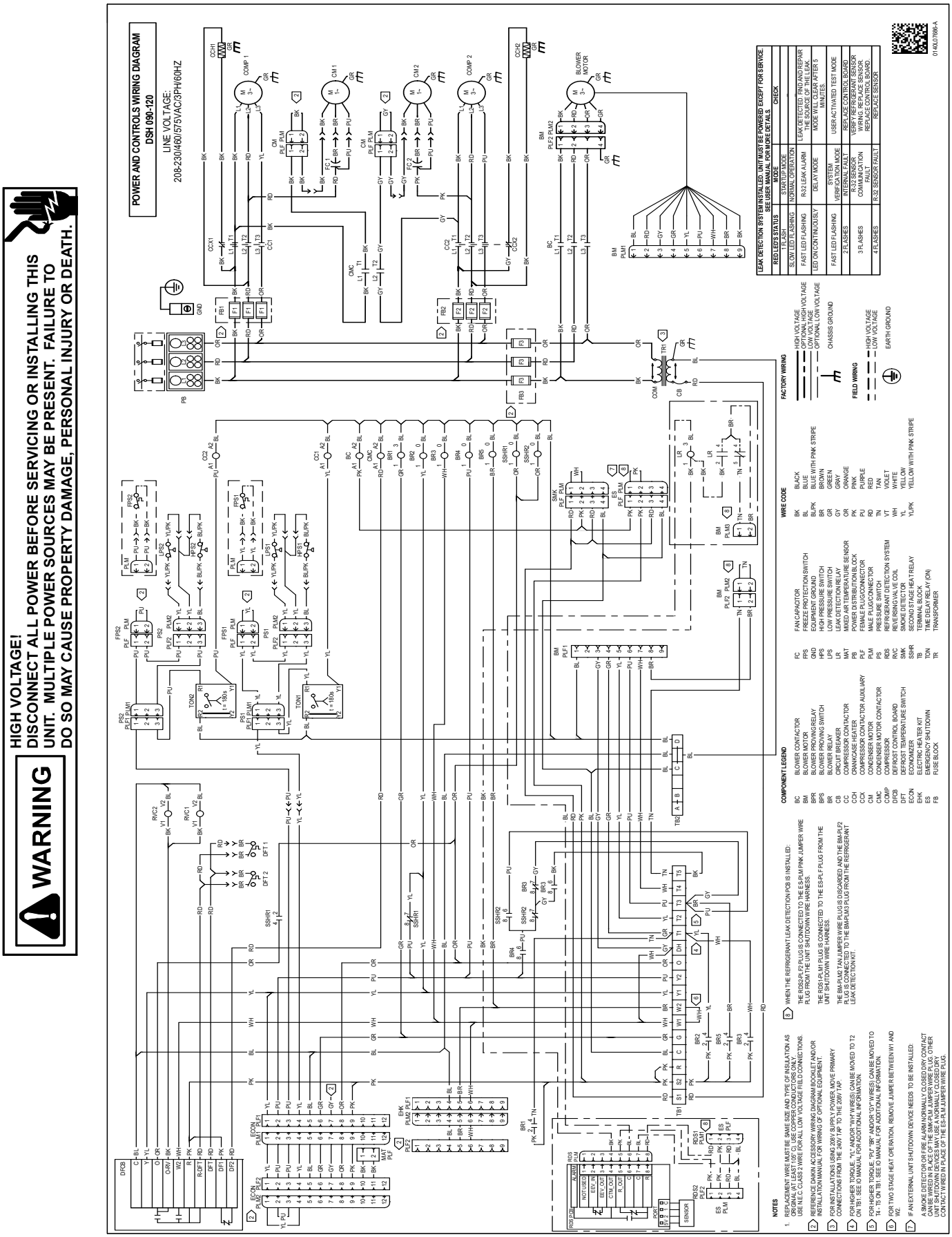

Wiring is subject to change. Always refer to the wiring diagram on the unit for the most up-to-date wiring.

WIRING DIAGRAM

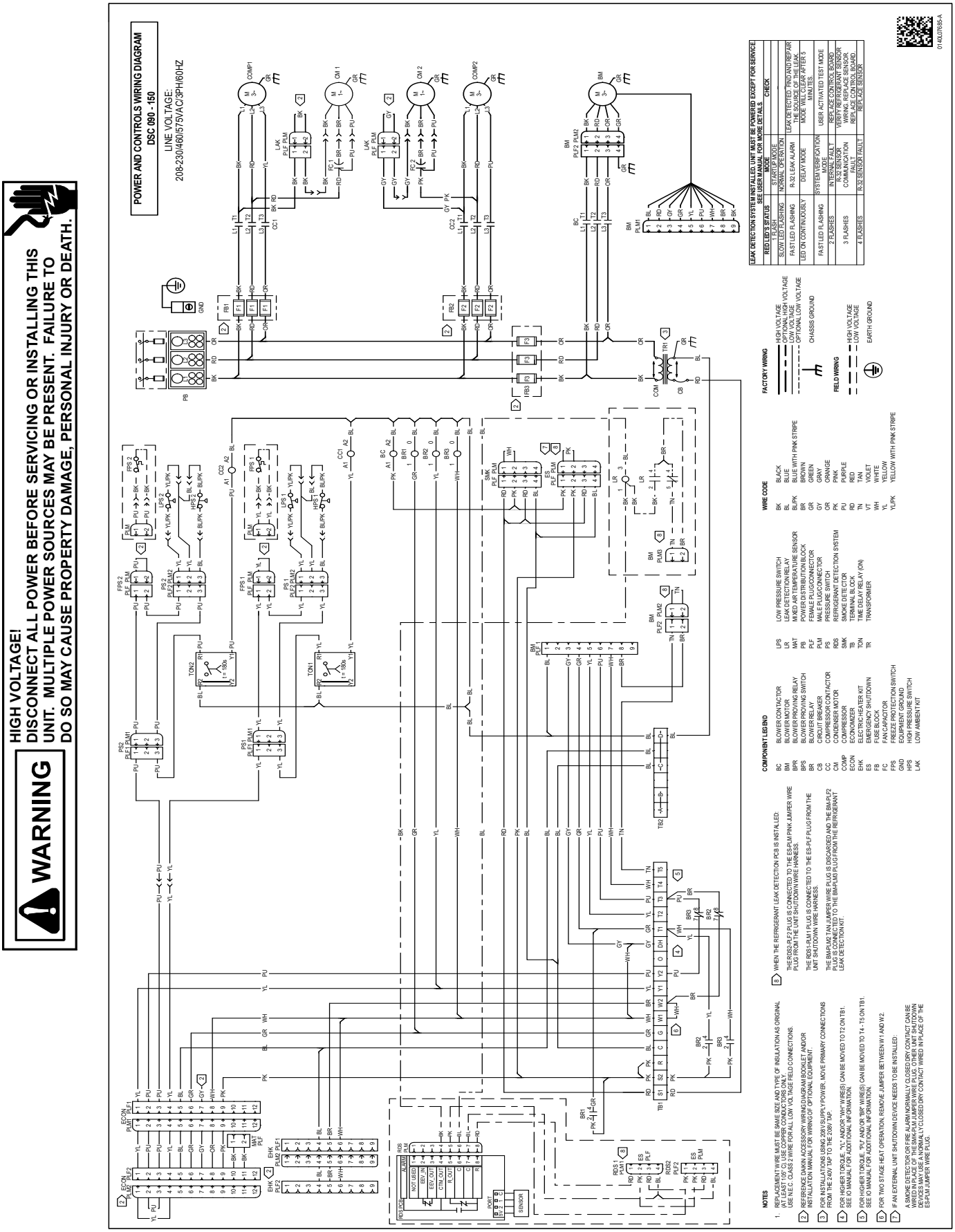

Wiring is subject to change. Always refer to the wiring diagram on the unit for the most up-to-date wiring.

Start-up Checklist

**Store in job file*

Date: _____ Location: _____

Model Number: _____ _____

Serial Number: _____ _____

Technician: _____ Unit #: _____

Pre Start-Up

(Check each item as completed)

- ☐ Verify all packaging material has been removed.
- ☐ Remove all shipping brackets per installation instructions.
- ☐ Verify the job site voltage agrees with the unit serial plate.
- ☐ Verify condensate connection is installed per installation instructions.
- ☐ Verify proper clearance around the unit for safety, service, maintenance and proper unit operation.
- ☐ Verify proper weatherproofing of all ductwork, roof curbs and electrical connections.
- ☐ Check refrigerant piping for rubbing and leaks. *Repair if necessary.*
- ☐ Check unit wiring to ensure it is not in contact with refrigerant piping or sharp metal edges.
- ☐ Check all electrical connections and terminals. *Tighten as needed.*
- ☐ Verify that the crankcase heaters have been energized for 24 hours.
- ☐ Verify the scroll compressor(s) are rotating in the right direction.
- ☐ Verify all accessories are installed and operating correctly.
- ☐ Check filters and replace if necessary.
- ☐ Verify the installation of the thermostat.

9/2014

Start-up Checklist

Start-Up

(Insert the values as each item is completed.)

ELECTRICAL

Supply Voltage	L1 - L2	_____	L2 - L3	_____	L3 - L1	_____
Circuit 1 Compressor Amps	L1	_____	L2	_____	L3	_____
Circuit 2 Compressor Amps	L1	_____	L2	_____	L3	_____
Blower Amps	L1	_____	L2	_____	L3	_____
Condenser Fan Amps	Fan 1	_____	Fan 2	_____	Fan 3	_____

BLOWER EXTERNAL STATIC PRESSURE

Return Air Static Pressure	_____	IN. W.C.
Supply Air Static Pressure	_____	IN. W.C.
Total External Static Pressure	_____	IN. W.C.
Blower Wheel RPM	_____	RPM

TEMPERATURES

Outdoor Air Temperature	_____	DB	_____	WB
Return Air Temperature	_____	DB	_____	WB
Cooling Supply Air Temperature	_____	DB	_____	WB
Heating Supply Air Temperature	_____	DB		

PRESSURES

Gas Inlet Pressure	_____	IN. W.C.		
Gas Manifold Pressure	_____	IN. W.C. (Low Fire)	_____	IN. W.C. (High Fire)
Suction Circuit 1	_____	PSIG	_____	°F
Superheat (Orifice System)			_____	°F
Suction Circuit 2	_____	PSIG	_____	°F
Superheat (Orifice System)			_____	°F
Discharge Circuit 1	_____	PSIG	_____	°F
Subcooling (TXV System)			_____	°F
Discharge Circuit 2	_____	PSIG	_____	°F
Subcooling (TXV System)			_____	°F

(HEAT PUMP ONLY)

Suction Circuit 1	_____	PSIG	_____	°F
Suction Circuit 2	_____	PSIG	_____	°F
Discharge Circuit 1	_____	PSIG	_____	°F
Discharge Circuit 2	_____	PSIG	_____	°F

PAGE LEFT INTENTIONALLY BLANK

PAGE LEFT INTENTIONALLY BLANK

CUSTOMER FEEDBACK
Daikin is very interested in all product comments.
Please fill out the feedback form on the following link:
https://daikincomfort.com/contact-us
You can also scan the QR code on the right to be directed to the feedback page.

Our continuing commitment to quality products may mean a change in specifications without notice.

©2024-2025 ***DAIKIN COMFORT TECHNOLOGIES MANUFACTURING, L.P.***
19001 Kermier Rd., Waller, TX 77484
www.daikincomfort.com