DAIKIN

INSTALLATION INSTRUCTIONS

DRG Series

Light Commercial Packaged Gas /Electric Unit

7.5 to 12.5 Ton

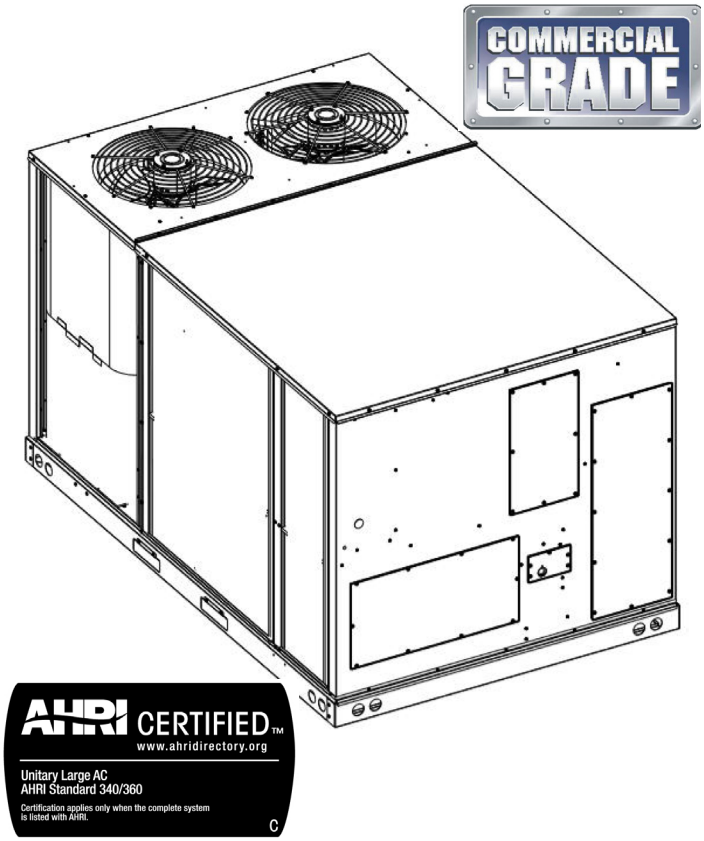

ATTENTION INSTALLING PERSONNEL:

Prior to installation, thoroughly familiarize yourself with this Installation Manual. Observe all safety warnings. During installation or repair, caution is to be observed.

It is your responsibility to install the product safely and to educate the customer on its safe use.

RECOGNIZE THIS SYMBOL AS A SAFETY PRECAUTION

These installation instructions cover the outdoor installation of single package heating and cooling units. See the Specification Sheet applicable to your model for information regarding accessories.

NOTE: Please contact your distributor or our website for the applicable Specification Sheet referred to in this manual.

This forced air central unit design complies with requirements embodied in The American National Standard / National Standard of Canada: **ANSI Z21.47•CSA-2.3 Gas-fired central furnaces.**

WARNING

ONLY PERSONNEL THAT HAVE BEEN TRAINED TO INSTALL, ADJUST, SERVICE, MAINTENANCE OR REPAIR (HEREINAFTER, "SERVICE") THE EQUIPMENT SPECIFIED IN THIS MANUAL SHOULD SERVICE THE EQUIPMENT.

THIS EQUIPMENT IS NOT INTENDED FOR USE BY PERSONS (INCLUDING CHILDREN) WITH REDUCED PHYSICAL, SENSORY OR MENTAL CAPABILITIES, OR LACK OF EXPERIENCE AND KNOWLEDGE, UNLESS THEY HAVE BEEN GIVEN SUPERVISION OR INSTRUCTION CONCERNING USE OF THE APPLIANCE BY A PERSON RESPONSIBLE FOR THEIR SAFETY.

CHILDREN SHOULD BE SUPERVISED TO ENSURE THAT THEY DO NOT PLAY WITH THE EQUIPMENT.

THE MANUFACTURER WILL NOT BE RESPONSIBLE FOR ANY INJURY OR PROPERTY DAMAGE ARISING FROM IMPROPER SUPERVISION, SERVICE OR SERVICE PROCEDURES. IF YOU SERVICE THIS UNIT, YOU ASSUME RESPONSIBILITY FOR ANY INJURY OR PROPERTY DAMAGE WHICH MAY RESULT. IN ADDITION, IN JURISDICTIONS THAT REQUIRE ONE OR MORE LICENSES TO SERVICE THE EQUIPMENT SPECIFIED IN THIS MANUAL, ONLY LICENSED PERSONNEL SHOULD SERVICE THE EQUIPMENT. IMPROPER SUPERVISION, INSTALLATION, ADJUSTMENT, SERVICING, MAINTENANCE OR REPAIR OF THE EQUIPMENT SPECIFIED IN THIS MANUAL, OR ATTEMPTING TO INSTALL, ADJUST, SERVICE OR REPAIR THE EQUIPMENT SPECIFIED IN THIS MANUAL WITHOUT PROPER SUPERVISION OR TRAINING MAY RESULT IN PRODUCT DAMAGE, PROPERTY DAMAGE, PERSONAL INJURY OR DEATH.

WARNING

DO NOT BYPASS SAFETY DEVICES

INDEX

Replacement Parts....2
Safety Instructions....2
General Information....4
Unit Location....5
Clearances....6
Roof Curb Post-Installation checks....7

Our continuing commitment to quality products may mean a change in specifications without notice.

©2020-2023 DAIKIN COMFORT TECHNOLOGIES MANUFACTURING, L.P.

19001 Kermier RD., Waller, TX 77484
www.daikincomfort.com

IOD-1066
10/2023

Roof Top Duct Connections.....7
Rigging Details.....7
Weights and Center of Gravity.....9
Electrical wiring.....9
Gas Supply Piping.....12
Propane Gas Installations.....13
Circulating Air and Filters.....15
Condensate Drain Connection.....15
Startup, Adjustments, and Checks.....16
Air flow Adjustments.....17
Gas System Check.....19
Normal Sequence Of Operation.....22
Maintenance.....25
Troubleshooting.....27
Appendix A Blower Performance Tables.....29
Appendix B Electrical Data.....65
Appendix C Unit dimensions.....67
Appendix D Min-Max Airflow.....68
Appendix E Wiring Diagrams.....69
Startup Checklist.....73

REPLACEMENT PARTS

Ordering Parts

When reporting shortages or damages, or ordering repair parts, give the complete unit model and serial numbers as stamped on the unit's nameplate.

Replacement parts for this appliance are available through your contractor or local distributor. Location of your local distributor can be found at www.daikinac.com or contact:

EQUIPMENT SUPPORT

Daikin Comfort Technologies Manufacturing, L.P.

19001 Kermier Road •Waller, Texas 77484

855-DAIKIN-1

SAFETY INSTRUCTIONS

Before installing this unit, please read this manual to familiarize yourself on the specific items which must be adhered to, including maximum external static pressure to unit, air temperature rise and minimum or maximum CFM.

Keep this literature in a safe place for future reference.

To The Installer

Before installing this unit, please read this manual to familiarize yourself on the specific items which must be adhered to, including maximum external static pressure to unit, air temperature rise, minimum or maximum CFM and motor speed connections.

WARNING

Should overheating occur or the gas supply fail to shut off, turn off the manual gas shutoff valve external to the furnace before turning off the electrical supply.

CAUTION

Sheet metal parts, screws, clips and similar items inherently have sharp edges, and it is necessary that the installer and service personnel exercise caution.

WARNING

If the information in these instructions is not followed exactly, a fire or explosion may result causing property damage, personal injury or loss of life.

- **Do not store or use gasoline or other flammable vapors and liquids in the vicinity of this or any other appliance.**

-WHAT TO DO IF YOU SMELL GAS:

Do not try to light any appliance.
Do not touch any electrical switch; do not use any phone in your building.
Immediately call your gas supplier from a neighbor's phone. Follow the gas supplier's instructions.
If you cannot reach your gas supplier, call the fire department.

- **Installation and service must be performed by a qualified installer, service agency or the gas supplier.**

WARNING

Do not connect to or use any device that is not design certified by the manufacturer for use with this unit. Serious property damage, personal injury, reduced unit performance and/or hazardous conditions may result from the use of such non-approved devices.

WARNING

To avoid property damage, personal injury or death, do not use this unit if any part has been under water. Immediately call a qualified service technician to inspect the furnace and to replace any part of the control system and any gas control having been under water.

WARNING

THIS UNIT MUST NOT BE USED AS A "CONSTRUCTION HEATER" DURING THE FINISHING PHASES OF CONSTRUCTION ON A NEW STRUCTURE. THIS TYPE OF USE MAY RESULT IN PREMATURE FAILURE OF THE UNIT DUE TO EXTREMELY LOW RETURN AIR TEMPERATURE AND EXPOSURE TO CORROSIVE OR VERY DIRTY ATMOSPHERES.

WARNING

HIGH VOLTAGE!
DISCONNECT ALL POWER BEFORE SERVICING OR INSTALLING THIS UNIT. MULTIPLE POWER SOURCES MAY BE PRESENT. FAILURE TO DO SO MAY CAUSE PROPERTY DAMAGE, PERSONAL INJURY OR DEATH.

WARNING

TO PREVENT PROPERTY DAMAGE, PERSONAL INJURY OR DEATH, DO NOT STORE COMBUSTIBLE MATERIALS OR USE GASOLINE OR OTHER FLAMMABLE LIQUIDS OR VAPORS IN THE VICINITY OF THIS APPLIANCE.

WARNING

TO PREVENT PROPERTY DAMAGE, PERSONAL INJURY OR DEATH, DUE TO FIRE, EXPLOSIONS, SMOKE, SOOT, CONDENSATION, ELECTRIC SHOCK OR CARBON MONOXIDE, THIS UNIT MUST BE PROPERLY INSTALLED, REPAIRED, OPERATED, AND MAINTAINED.

DANGER
PELIGRO

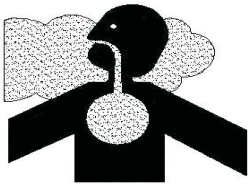

CARBON MONOXIDE POISONING HAZARD

Special Warning for Installation of Furnace or Air Handling Units in Enclosed Areas such as Garages, Utility Rooms or Parking Areas

Carbon monoxide producing devices (such as an automobile, space heater, gas water heater, etc.) should not be operated in enclosed areas such as unventilated garages, utility rooms or parking areas because of the danger of carbon monoxide (CO) poisoning resulting from the exhaust emissions. If a furnace or air handler is installed in an enclosed area such as a garage, utility room or parking area and a carbon monoxide producing device is operated therein, there must be adequate, direct outside ventilation.

This ventilation is necessary to avoid the danger of CO poisoning which can occur if a carbon monoxide producing device continues to operate in the enclosed area. Carbon monoxide emissions can be (re)circulated throughout the structure if the furnace or air handler is operating in any mode.

CO can cause serious illness including permanent brain damage or death.

B10259-216

RIESGO DE INTOXICACIÓN POR MONÓXIDO DE CARBONO

Advertencia especial para la instalación de calentadores ó manejadoras de aire en áreas cerradas como estacionamientos ó cuartos de servicio.

Los equipos ó aparatos que producen monóxido de carbono (tal como automóvil, calentador de gas, calentador de agua por medio de gas, etc) no deben ser operados en áreas cerradas debido al riesgo de envenenamiento por monóxido de carbono (CO) que resulta de las emisiones de gases de combustión. Si el equipo ó aparato se opera en dichas áreas, debe existir una adecuada ventilación directa al exterior.

Esta ventilación es necesaria para evitar el peligro de envenenamiento por CO, que puede ocurrir si un dispositivo que produce monóxido de carbono sigue operando en el lugar cerrado.

Las emisiones de monóxido de carbono pueden circular a través del aparato cuando se opera en cualquier modo.

El monóxido de carbono puede causar enfermedades severas como daño cerebral permanente ó muerte.

B10259-216

RISQUE D'EMPOISONNEMENT AU MONOXYDE DE CARBONE

Avertissement special au sujet de l'installation d'appareils de chauffage ou de traitement d'air dans des endroits clos, tets les garages, les locaux d'entretien et les stationnements.

Evitez de mettre en marche les appareils produisant du monoxyde de carbone (tels que les automobile, les appareils de chauffage autonome,etc.) dans des endroits non ventilés tels que les d'empoisonnement au monoxyde de carbone. Si vous devez faire fonctionner ces appareils dans un endroit clos, assures-vous qu'il y ait une ventilation directe provenant de l'exterier.

Cette ventilation est nécessaire pour éviter le danger d'intoxication au CO pouvant survenir si un appareil produisant du monoxyde de carbone continue de fonctionner au sein de la zone confinée.

Les émissions de monoxyde de carbone peuvent etre recircules dans les endroits clos, si l'appareil de chauffage ou de traitement d'air sont en marche.

Le monoxyde de carbone peut causer des maladies graves telles que des dommages permanents au cerveau et meme la mort.

B10259-216

GENERAL INFORMATION

This unit is approved for outdoor installation ONLY. Rated performance is achieved after 20 hours of operation. Rated performance is delivered at the specified airflow. See product specification sheet for light commercial models. Specification sheets can be found at www.daikinac.com for Daikin brand products. Within the website, please select the commercial products menu and then select the submenu for the type of product to be installed, such as air conditioners or heat pumps, to access a list of product pages that each contain links to that model's specification sheet.

To assure that your unit operates safely and efficiently, it must be installed, operated, and maintained in accordance with these installation and operating instructions, all local building codes and ordinances, or in their absence, with the latest edition of the National Fuel Gas Code NFPA54/ ANSI Z223.1 and National Standard of Canada CAN/CSA B149 Installation Codes.

EPA Regulations

Important: The United States Environmental Protection Agency (EPA) has issued various regulations regarding the introduction and disposal of refrigerants in this unit. Failure to follow these regulations may harm the environment and can lead to the imposition of substantial fines. Because regulations may vary due to passage of new laws, we suggest a certified technician perform any work done on this unit. Should you have any questions please contact the local office of the EPA.

National Codes

This product is designed and manufactured to permit installation in accordance with National Codes. It is the installer's responsibility to install the product in accordance with National Codes and/or prevailing local codes and regulations.

The heating and cooling capacities of the unit should be greater than or equal to the design heating and cooling loads of the area to be conditioned. The loads should be calculated by an approved method or in accordance with ASHRAE Guide or Manual J - Load Calculations published by the Air Conditioning Contractors of America.

Obtain from:

American National Standards Institute

www.ansi.org

System design and installation should also, where applicable, follow information presented in accepted industry guides such as the ASHRAE Handbooks. The manufacturer assumes no responsibility for equipment installed in violation of any code or regulation. The mechanical installation of the packaged roof top units consists of making final connections between the unit and building services; supply and return duct connections; and drain connections (if required). The internal systems of the unit are completely factory-installed and tested prior to shipment.

Units are generally installed on a steel roof mounting curb assembly which has been shipped to the job site for installation on the roof structure prior to the arrival of the unit. The model number shown on the unit's identification plate identifies the various components of the unit such as refrigeration tonnage, heating input and voltage.

Carefully inspect the unit for damage including damage to the cabinetry. Any bolts or screws which may have loosened in transit must be re-tightened.

In the event of damage, the receiver should:

1. Make notation on delivery receipt of any visible damage to shipment or container.
2. Notify carrier promptly and request an inspection.
3. In case of concealed damage, carrier should be notified as soon as possible-preferably within 5 days.
4. File the claim with the following supporting documents:
    a. Original Bill of Lading, certified copy, or indemnity bond.
    b. Original paid freight bill or indemnity in lieu thereof.
    c. Original invoice or certified copy thereof, showing trade and other discounts or reductions.
    d. Copy of the inspection report issued by carrier representative at the time damage is reported to the carrier. The carrier is responsible for making prompt inspection of damage and for a thorough investigation of each claim. The distributor or manufacturer will not accept claims from dealers for transportation damage.

NOTE: When inspecting the unit for transportation damage, remove all packaging materials. Recycle or dispose of the packaging material according to local codes.

Pre-Installation Checks

Carefully read all instructions for the installation prior to installing unit. Ensure each step or procedure is understood and any special considerations are taken into account before starting installation. Assemble all tools, hardware and supplies needed to complete the installation. Some items may need to be purchased locally.

NOTE: This unit should be installed in a manner so that it is not accessible to the public.

UNIT LOCATION

WARNING

To prevent possible equipment damage, property damage, personal injury or death, the following bullet points must be observed when installing the unit.

IMPORTANT NOTE: Remove wood shipping rails prior to installation of the unit.

All Installations:

Important Note: *unit should be energized 24 hours prior to compressor start up to ensure crankcase heater has sufficiently warmed the compressors. compressor damage may occur if this step is not followed.*

NOTE: Appliance is shipped from factory for vertical duct application.

Proper installation of the unit ensures trouble-free operation. Improper installation can result in problems ranging from noisy operation to property or equipment damages, dangerous conditions that could result in injury or personal property damage and that are not covered by the warranty. Give this booklet to the user and explain it's provisions. The user should retain these instructions for future reference.

- For proper flame pattern within the heat exchanger and proper condensate drainage, the unit must be mounted level.
- The flue outlet must be at least 12 inches from any opening through which flue gases could enter a building, and at least three feet above any forced air inlet located within ten feet. The economizer/ manual fresh air intake/motorized fresh air intake and combustion air inlet mounted on the unit are not affected by this restriction.
- To avoid possible corrosion of the heat exchanger, do not locate the unit in an area where the outdoor air (i.e. combustion air for the unit) will be frequently contaminated by compounds containing chlorine or fluorine. Common sources of such compounds include swimming pool chemicals and chlorine bleaches, paint stripper, adhesives, paints, varnishes, sealers, waxes (which are not yet dried) and solvents used during construction and remodeling. Various commercial and industrial processes may also be sources of chlorine/fluorine compounds.
- The unit shall not be connected to a chimney flue serving a separate appliance designed to burn solid fuel.
- To avoid possible illness or death of the building occupants, do NOT locate outside air intake device (economizer, manual fresh air intake, motorized fresh air intake) too close to an exhaust outlet, gas vent termination, or plumbing vent outlet. For specific distances required, consult local codes.
- Allow minimum clearances from the enclosure for fire protection, proper operation, and service access (see unit clearances). These clearances must be permanently maintained.
- The combustion air inlet and flue outlet on the unit must never be obstructed. If used, do not allow the economizer/manual fresh air damper/ motorized fresh air damper to become blocked by snow or debris. In some climates or locations, it may be necessary to elevate the unit to avoid these problems.
- When the unit is heating, the temperature of the return air entering the unit must be a minimum of 55° F.

Ground Level Installations Only:

- When the unit is installed on the ground adjacent to the building, a level concrete (or equal) base is recommended. Prepare a base that is 3" larger than the package unit footprint and a minimum of 3" thick.
- The base should also be located where no runoff of water from higher ground can collect in the unit.

Roof top Installations Only:

- To avoid possible property damage or personal injury, the roof must have sufficient structural strength to carry the weight of the unit(s) and snow or water loads as required by local codes. Consult a structural engineer to determine the weight capabilities of the roof.
- The unit may be installed directly on wood floors or on Class A, Class B, or Class C roof covering material.
- To avoid possible personal injury, a safe, flat surface for service personnel should be provided.
- As indicated on the unit data plate, a minimum clearance of 36" to any combustible material is required on the furnace access side of the unit. All combustible materials must be kept out of this area.
- This 36" clearance must also be maintained to insure proper combustion air and flue gas flow. The combustion air intake and furnace flue discharge must not be blocked for any reason, including blockage by snow.
- Adequate clearances from the furnace flue discharge to any adjacent public walkways, adjacent buildings, building openings or openable windows must be maintained in accordance with the latest edition of the National Fuel Gas Code ANSI Z223.1/NFPA 54.
- Minimum horizontal clearance of 48" from the furnace flue discharge to any electric meters, gas meters, regulators and relief equipment is required.

Unit Precautions

- Do not stand or walk on the unit.
- Do not drill holes anywhere in panels or in the base frame of the unit except where indicated. Unit access panels provide structural support.
- Do not remove any access panels until unit has been installed on roof curb or field supplied structure.
- Do not roll unit across finished roof without prior approval of owner or architect.
- Do not skid or slide on any surface as this may damage unit base. The unit must be stored on a flat, level surface. Protect the condenser coil because it is easily damaged.

Roof Curb Installations Only:

Curb installations must comply with local codes and should be done in accordance with the established guidelines of the National Roofing Contractors Association.

Proper unit installation requires that the roof curb be firmly and permanently attached to the roof structure. Check for adequate fastening method prior to setting the unit on the curb.

Full perimeter roof curbs are available from the factory and are shipped unassembled. Field assembly, squaring, leveling and mounting on the roof structure are the responsibility of the installing contractor. All required hardware necessary for the assembly of the sheet metal curb is included in the curb accessory.

WARNING

To prevent possible equipment damage, property damage, personal injury or death, the following bullet points must be observed when installing the unit.

- Sufficient structural support must be determined prior to locating and mounting the curb and package unit.
- Ductwork must be constructed using industry guidelines. The duct work must be placed into the roof curb before mounting the package unit. Our full perimeter curbs include duct connection frames to be assembled with the curb. Cantilevered type curbs are not available from the factory.
- Curb insulation, cant strips, flashing and general roofing material are furnished by the contractor.
- The curbs must be supported on parallel sides by roof members.
- The roof members must not penetrate supply and return duct opening areas as damage to the unit might occur.

NOTE: The unit and curb accessories are designed to allow vertical duct installation before unit placement. Duct installation after unit placement is not recommended.

CAUTION

All curbs look similar. To avoid incorrect curb positioning, check job plans carefully and verify markings on curb assembly. Instructions may vary in curb styles and supersedes information shown.

See the manual shipped with the roof curb for assembly and installation instructions.

CLEARANCES

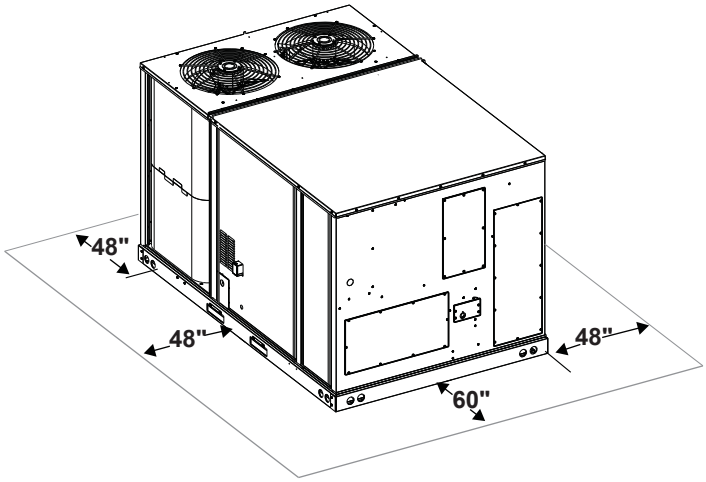

Unit Clearances

**In situations that have multiple units, a 48" minimum clearance is required between the condenser coils.*

Adequate clearance around the unit should be kept for safety, service, maintenance, and proper unit operation. A clearance of at least 60" is required on duct panel side to allow evaporator coil and drain pan removal. A clearance of 48" is recommended on all other sides of the unit to facilitate possible parts replacement, to allow service access and to insure proper ventilation and condenser airflow. The top of the unit should be completely unobstructed. If units are to be located under an overhang, the unit must not be installed beneath any obstruction. There should be a minimum of 48" clearance and provisions made to deflect the warm discharge air out from the overhang. The unit should be installed remote from all building exhausts to inhibit ingestion of exhaust air into the unit fresh air intake.

NOTE: If the 48" minimum clearance is used on the control panel side of a DRG unit, a flue extension kit needs to be installed to prevent flue gas recirculation. See table below for the kit selection

Model size	Kit part number
7.5 to 10 ton	HEFLUE090120
12.5 ton	HEFLUE150

Flue Extension Kits

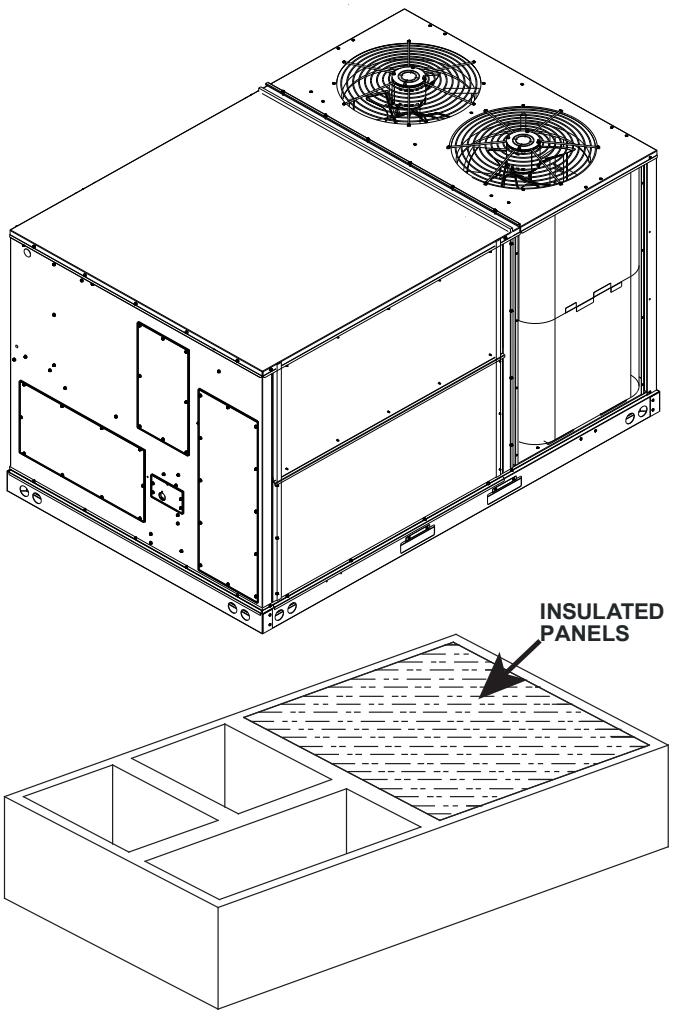

Roof Curb Installation

ROOF CURB POST-INSTALLATION CHECKS

After installation, check the top of the curb, duct connection frame and duct flanges to make sure gasket has been applied properly. Gasket should be firmly applied to the top of the curb perimeter, duct flanges and any exposed duct connection frame. If gasket is loose, re-apply using strong weather resistant adhesive.

Protrusion

Inspect curb to ensure that none of the utility services (electric) routed through the curb protrude above the curb.

CAUTION

If protrusions exist, do not attempt to set unit on curb.

ROOF TOP DUCT CONNECTIONS

Install all duct connections on the unit before placing the unit on rooftop.

Horizontal Discharge

Refer to IOD-7082 included in the literature pack for installing horizontal duct covers.

Flexible duct connectors between the unit and ducts are recommended. Insulate and weatherproof all external ductwork and joints as required and in accordance with local codes.

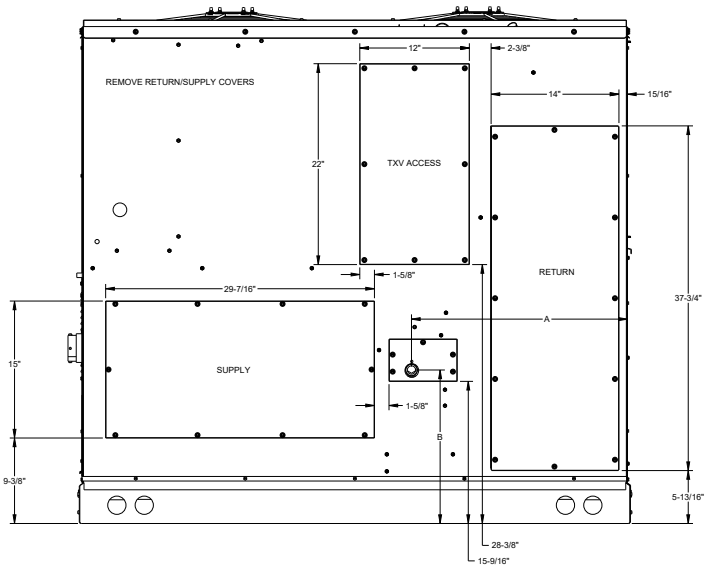

Horizontal Discharge Duct Connections|

UNIT	DIM "A"	DIM "B"
DRG090	23.5	16.8
DRG102	23.5	6.5
DRG120	23.5	6.5
DRG150	23.5	6.5

Drain Drop Chart

RIGGING DETAILS

WARNING

To prevent property damage, the unit should remain in an upright position during all riggins and moving operations. To facilitate lifting and moving when a crane is used, place the unit in an adequate cable sling.

CAUTION

DO NOT LIFT units two at a time. Provisions for forks have been included in the unit base frame. Minimum fork length is 48" to prevent damage to the unit. 72" is recommended.

Provisions for forks have been included in the unit base frame. No other fork locations are approved.

WARNING

To prevent possible equipment damage, property damage, personal injury or death, the following bullet points must be observed when installing the unit.

- Unit must be lifted by the four lifting holes located at the base frame corners.
- Lifting cables should be attached to the unit with shackles.
- The distance between the crane hook and the top of the unit must not be less than 60”.
- Two spreader bars must span over the unit to prevent damage to the cabinet by the lift cables. Spreader bars must be of sufficient length so that cables do not come in contact with the unit during transport. Remove wood struts mounted beneath unit base frame before setting unit on roof curb. These struts are intended to protect unit base frame from fork lift damage. Removal is accomplished by extracting the sheet metal retainers and pulling the struts through the base of the unit. Refer to rigging label on the unit.
- The unit is equipped with a steel shipping brace located underneath the unit (under compressors). If installing on a roof curb, the brace MUST be removed. Follow the following instructions for removal.

CAUTION

When unit is suspended, boards and shipping brace will drop when screws are removed. To prevent personal injury, stand clear. Remove fork hole brackets, boards and shipping brace from bottom of unit before placing unit onto curb.

Before installing this unit on a roof curb:

1. Remove wooden struts per installation instructions. These are the struts that are located in the fork holes and are used to protect the unit from damage while lifting with forks.
2. Locate and remove the four (4) screws that attach the shipping brace to the side rails. There will be two (2) screws on each side of the unit. See following figure.

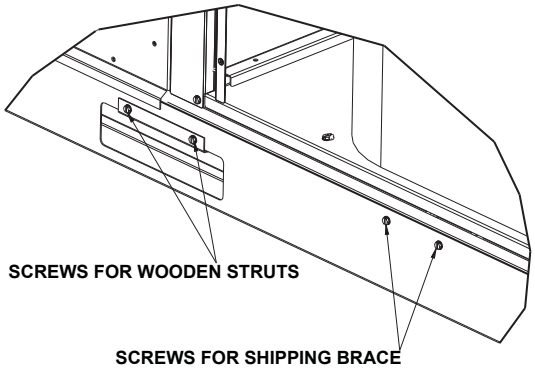

3. Lift unit per the “Rigging Details” section of the installation instructions, observing all warnings and cautions. Lift the unit high enough off the ground to reach under and grasp the shipping brace.
4. Rotate the brace by tapping the ends until the brace falls free from the unit.
5. Dispose of the brace appropriately.

Important: If using bottom discharge with roof curb, ductwork should be attached to the curb prior to installing the unit. Ductwork dimensions are shown in Roof Curb Installation Instructions.

Refer to the Roof Curb Installation Instructions for proper curb installation. Curbing must be installed in compliance with the National Roofing Contractors Association Manual.

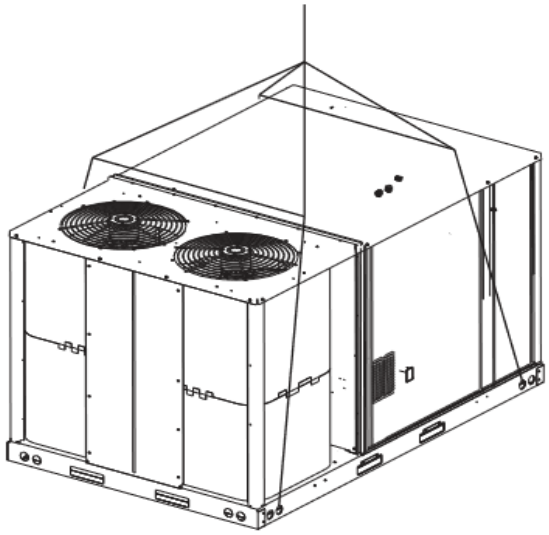

To assist in determining rigging requirements, unit weights and center of gravity are shown as follows:

WEIGHTS AND CENTER OF GRAVITY

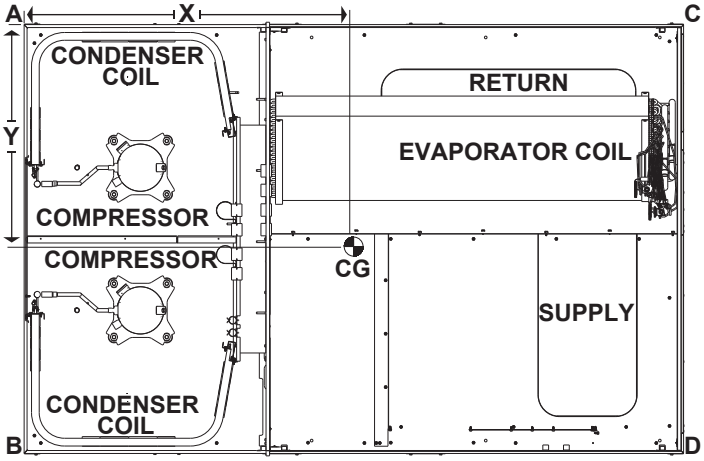

Corner and center of gravity locations

Note: Unit should be lifted at a point above center of gravity.

MODEL		DRG090	DRG102	DRG120	DRG150
X (Inch)		46	46	47	44
Y (Inch)		33	32	32	30
SHIPPING WEIGHT		1237	1248	1267	1345
OPERATING		1162	1173	1192	1270
CORNER WEIGHTS (lb)	A	317	298	312	301
	B	278	302	287	366
	C	214	252	237	324
	D	354	321	355	278

The numbers may slightly vary depending on installed options.

CAUTION

To prevent severe damage to the bottom of the unit, do not fork lift unit after wood struts have been removed.

Bring condenser end of unit into alignment with the curb first. Lower unit carefully onto roof mounting curb. When a rectangular cantilever curb is used, care should be taken to center the unit. Check for proper alignment and orientation of supply and return openings with duct.

Rigging Removal

CAUTION

To prevent damage to the unit, do not allow crane hooks and spreader bars to rest on the roof of the unit.

Remove spreader bars, lifting cables and other rigging equipment.

ELECTRICAL WIRING

WARNING

HIGH VOLTAGE!
Disconnect all power before servicing or installing this unit. Multiple power sources may be present. Failure to do so may cause property damage, personal injury or death.

WARNING

HIGH VOLTAGE!
To avoid personal injury or death due to electrical shock, do not tamper with factory wiring. The internal power and control wiring of these units are factory-installed and have been thoroughly tested prior to shipment. Contact your local representative if assistance is required.

CAUTION

To prevent damage to the wiring, protect wiring from sharp edges. Follow national electrical code and all local codes and ordinances. Do not route wires through removable access panels.

CAUTION

Conduit and fittings must be weather-tight to prevent water entry into the building.

For unit protection, use a fuse or HACR circuit breaker that is in excess of the circuit ampacity, but less than or equal to the maximum overcurrent protection device. DO NOT EXCEED THE MAXIMUM OVERCURRENT DEVICE SIZE SHOWN ON UNIT DATA PLATE.

All line voltage connections must be made through weatherproof fittings. All exterior power supply and ground wiring must be in approved weatherproof conduit.

The main power supply wiring to the unit and low voltage wiring to accessory controls must be done in accordance with these instructions, the latest edition of the National Electrical Code (ANSI/NFPA 70), and all local codes and ordinances.

The unit is factory wired for the voltage shown on the unit's data plate.

NOTE: If supply voltage is 208V, lead on primary of transformer(s) must be moved from the 230V to the 208V tap. Refer to wiring diagram on unit for details.

Main power wiring should be sized for the minimum circuit ampacity shown on the unit's database. Size wires in accordance with the ampacity tables in Article 310 of the National Electrical Code. If long wires are required, it may be necessary to increase the wire size to prevent excessive voltage drop. Wires should be sized for a maximum of 3% voltage drop.

CAUTION

TO AVOID RISK OF PROPERTY DAMAGE, PERSONAL INJURY OR FIRE, USE ONLY COPPER CONDUCTORS.

CAUTION

TO PREVENT IMPROPER AND DANGEROUS OPERATION DUE TO WIRING ERRORS, LABEL ALL WIRES PRIOR TO DISCONNECTION WHEN SERVICING CONTROLS. VERIFY PROPER OPERATION AFTER SERVICING.

NOTE: A weather-tight disconnect switch, properly sized for the unit total load, must be field or factory installed. An external field supplied disconnect may be mounted on the exterior panel.

Ensure the data plate is not covered by the field-supplied disconnect switch.

- Some disconnect switches are not fused. Protect the power leads at the point of distribution in accordance with the unit data plate.
- The unit must be electrically grounded in accordance with local codes or, in the absence of local codes, with the latest edition of the National Electrical Code ANSI/NFPA 70, and/or the Canadian Electrical Code, CSA C22.1, Part 1. A ground lug is provided for this purpose. Do not use the ground lug for connecting a neutral conductor.
- Connect power wiring to the electrical power block located within the main control box.

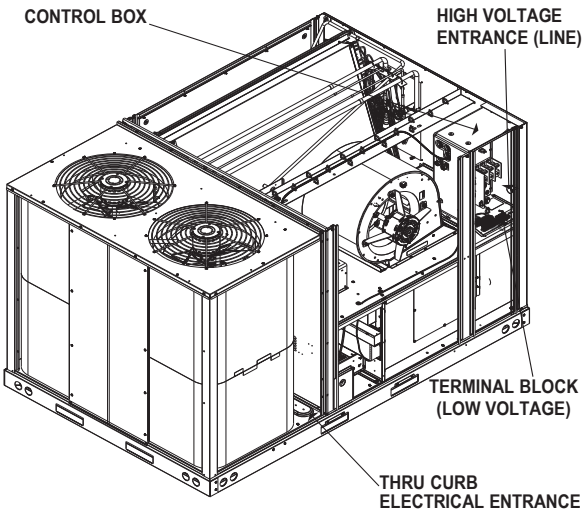

Power and low voltage block connections

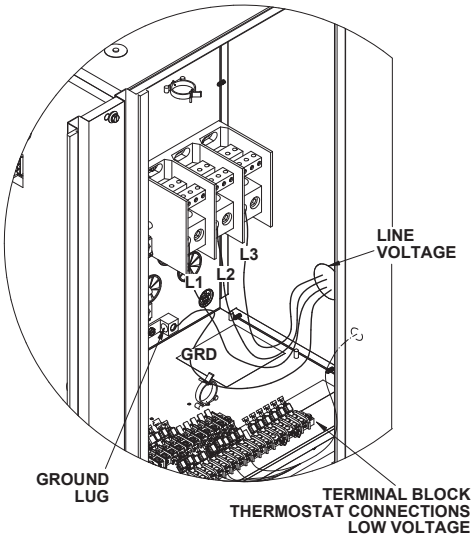

Thermostat Control Box

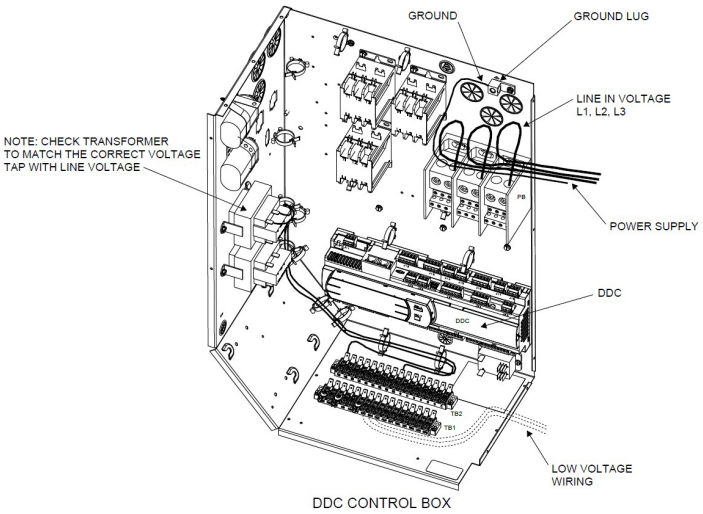

DDC Control Box

NOTE : depending on the options installed, the location of the components may vary in some models.

WARNING

FAILURE OF UNIT DUE TO OPERATION ON IMPROPER LINE VOLTAGE OR WITH EXCESSIVE PHASE UNBALANCE CONSTITUTES PRODUCT ABUSE AND WILL VOID YOUR WARRANTY AND MAY CAUSE SEVERE DAMAGE TO THE UNIT ELECTRICAL COMPONENTS.

Areas Without Convenience Outlet

It is recommended that an independent 115V power source be brought to the vicinity of the roof top unit for portable lights and tools used by the service mechanic.

NOTE: Refer to local codes for requirements. These outlets can also be factory installed.

Units installed on Roof Tops

Main power and low voltage wiring may enter the unit through the condenser end of unit or through the roof curb. Install conduit connectors at the desired entrance locations. External connectors must be weatherproof. All holes in the unit base must be sealed (including those around conduit nuts) to prevent water leakage into building. All required conduit and fittings are to be field supplied.

Supply voltage to roof top unit must not vary by more than 10% of the value indicated on the unit data plate. Phase voltage unbalance must not exceed 2%. Contact your local power company for correction of improper voltage or phase unbalance.

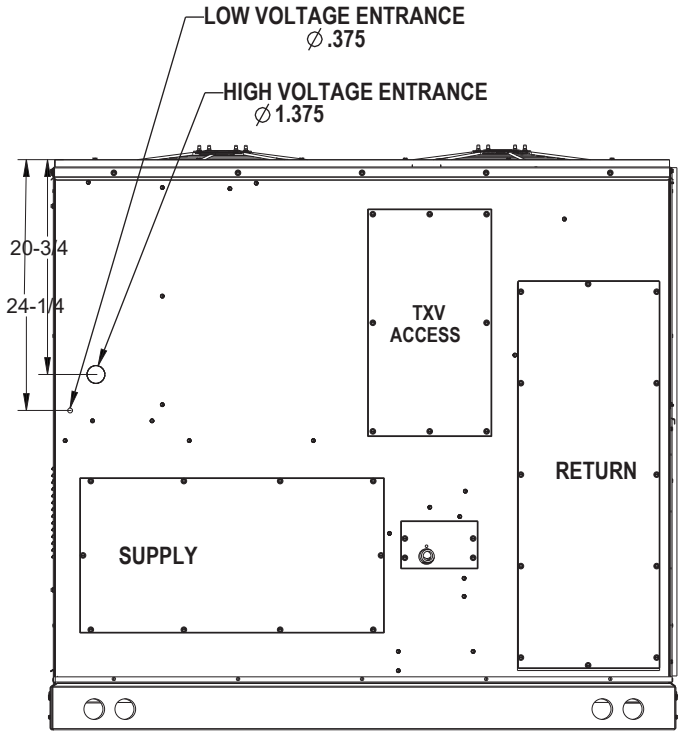

Thermostat Duct Panel

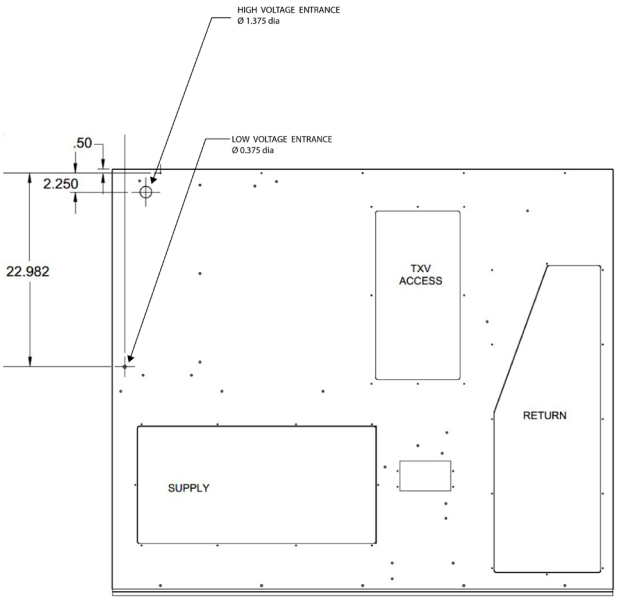

DDC Duct Panel

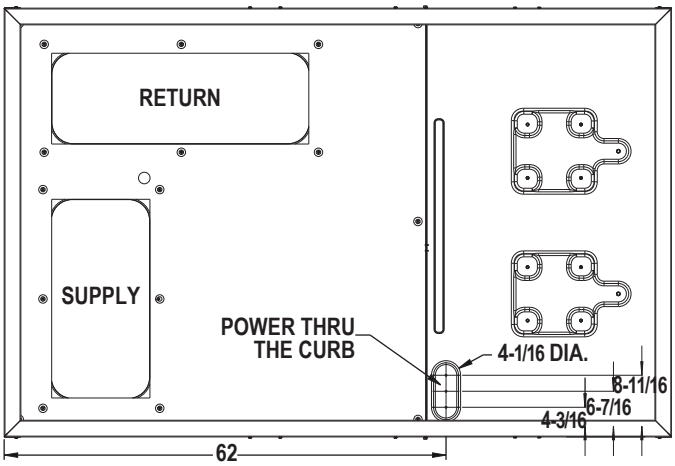

Electrical Entrance and Thru Curb

(bottom view of unit)

Low Voltage Control Wiring

1. A 24V thermostat must be installed for unit operation unless the DDC control option has been installed. (Refer to DDC QUICKSTART GUIDE). It may be purchased with the unit or field-supplied. Thermostats may be programmable or electromechanical as required.
2. Locate thermostat or remote sensor in the conditioned space where it will sense average temperature. Do not locate the device where it may be directly exposed to supply air, sunlight or other sources of heat. Follow installation instructions packaged with the thermostat.
3. Use #18 AWG wire for 24V control wiring runs not exceeding 75 feet. Use #16 AWG wire for 24V control wiring runs not exceeding 125 feet. Use #14 AWG wire for 24V control wiring runs not exceeding 200 feet. Low voltage wiring may be National Electrical

Code (NEC) Class 2 where permitted by local codes.

4. Route thermostat wires from sub-base terminals to the unit. Control wiring should enter through the duct panel opening or through curb indicated in “Electrical Entrance” figure. Connect thermostat and any accessory wiring to low voltage terminal block TB1 in the main control box. The hole on the duct panel that control wires enter through must be sealed to prevent water leakage into the unit.
5. For two-stage heating operation, remove the factory installed jumper connecting W1 and W2 terminals on terminal block.

NOTE: Field-supplied conduit may need to be installed depending on unit/curb configuration. Use #18 AWG solid conductor wire whenever connecting thermostat wires to terminals on sub-base. DO NOT use larger than #18 AWG wire. A transition to #18 AWG wire may be required before entering thermostat sub-base.

NOTE: Refer to unit wiring diagrams for thermostat hookups.

GAS SUPPLY PIPING

WARNING

To prevent personal injury or death due to improper installation, adjustment, alteration, service or maintenance, refer to this manual. For additional assistance or information, consult a qualified installer, servicer agency or the gas supplier.

IMPORTANT NOTE: This unit is factory set to operate on natural gas at the altitudes shown on the rating plate.

WARNING

To avoid property damage, personal injury or death when either using propane gas alone or at higher altitudes, obtain and install the proper conversion kit(s). Failure to do so can result in unsatisfactory operation and/or equipment damage. High altitude kits are for U.S. installations only and are not approved for use in Canada.

The rating plate is stamped with the model number, type of gas and gas input rating. Make sure the unit is equipped to operate on the type of gas available. Conversion to propane (LP) gas is permitted with the use of the factory authorized conversion kit (see the unit Technical Manual for the appropriate kit). For High Altitude derates, refer to the latest edition of the National Fuel Gas Code NFPA 54/ANSI Z223.1 or National Standard of Canada, Natural Gas and Propane Installation Code, CSA B149.1.

INLET GAS PRESSURE	
NATURAL	Min. 5.0" W.C., Max. 10.0" W.C.
PROPANE	Min. 11.0" W.C., Max. 14.0" W.C.

Inlet gas pressure must not exceed maximum value shown in table above.

The minimum supply pressure should not vary from that shown in the table above because this could prevent the unit from having dependable ignition. In addition, gas input to the burners must not exceed the rated input shown on the rating plate. Overfiring of the unit could result in premature heat exchanger failure.

Piping

IMPORTANT NOTE: To avoid possible unsatisfactory operation or equipment damage due to under firing of equipment, do not undersize the natural/propane gas piping from the meter/tank to the unit. When sizing a trunk line, include all appliances on that line that could be operated simultaneously.

The gas line installation must comply with local codes, or in the absence of local codes, with the latest edition of the National Fuel Gas Code NFPA 54 / ANSI Z223.1.

Natural Gas Connection

Natural Gas Capacity of Pipe in Cubic Feet of Gas Per Hour (CFH)					
Length of Pipe in Feet	Nominal Black Pipe Size (inches)				
	1/2	3/4	1	1 1/4	1 1 /2
10	132	278	520	1050	1600
20	92	190	350	730	1100
30	73	152	285	590	980
40	63	130	245	500	760
50	56	115	215	440	670
60	50	105	195	400	610
70	46	96	180	370	560
80	43	90	170	350	530
90	40	84	160	320	490
100	38	79	150	305	460

Pressure= .50 PSIG or less and Pressure Drop of 0.3" W.C.
(Based on 0.60 Specific Gravity Gas)

$$\text{CFH} = \frac{\text{BTUH Furnace Input}}{\text{Heating Value of Gas (BTU/Cubic Foot}}$$

Refer to the Proper Piping Practice drawing for the general layout at the unit. The following rules apply:

1. Use black iron pipe and fittings for the supply piping. The use of a flex connector and/or copper piping is permitted as long as it is in agreement with local codes.
2. Use pipe joint compound on male threads only. Pipe joint compound must be resistant to the action of the fuel used.
3. Use ground joint unions.
4. Install a drip leg to trap dirt and moisture before it can enter the gas valve. The drip leg must be a minimum

of three inches long.

5. Use two pipe wrenches when making connection to the gas valve to keep it from turning.
6. Install a manual shut-off valve in a convenient location (within six feet of unit) between the meter and the unit.
7. Tighten all joints securely.
8. The unit must be connected to the building piping by one of the following methods:
   - Rigid metallic pipe and fittings
   - Semi-rigid metallic tubing and metallic fittings (Aluminum alloy tubing must not be used in exterior locations).
   - Listed gas appliance connectors used in accordance with the terms of their listing that are completely in the same room as the equipment. Always use a new listed connector.
   - In the prior two methods above the connector or tubing must be protected from physical and thermal damage. Aluminum alloy tubing and connectors must be coated to protect against external corrosion when in contact with masonry, plaster or insulation or are subject to repeated wettings by liquids (water - not rain water, detergents or sewage).

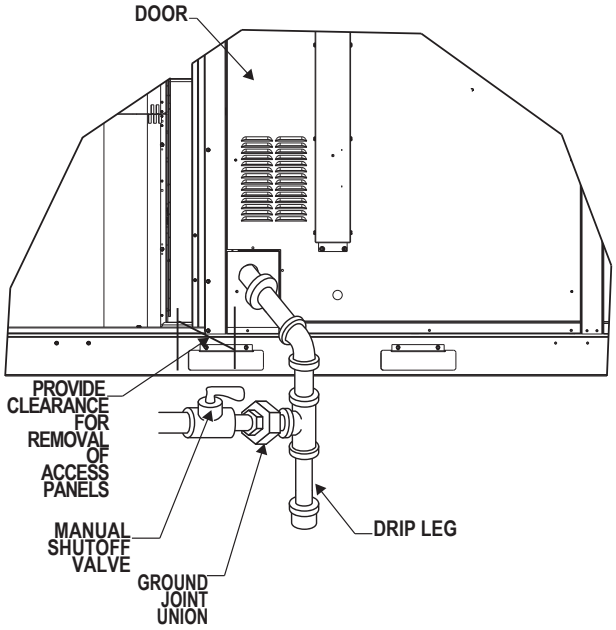

Proper piping practice

NOTE: The unit gas supply entrance is factory sealed with plugs. Keep plugs in place until gas supply is ready to be installed. Once ready, replace the plugs with the supplied grommets and install gas supply line.

Gas Piping Checks

CAUTION

To prevent property damage or personal injury due to fire, the following instructions must be preformed regarding gas connections and pressure testing:

- **The unit and its gas connections must be leak tested before placing in operation. Because of the danger of explosion or fire, never use a match or open flame to test for leaks. Never exceed specified pressures for testing. Higher pressure may damage gas valve and cause overfiring which may result in premature heat exchange failure.**
- **This unit and its shut-off valve must be disconnected from the gas supply during any pressure testing of that system at test pressures in excess of ½ PSIG (3.48 kPa).**
- **This unit must be isolated from the gas supply system by closing its manual shut-off valve during any pressure testing of the gas supply piping system at test pressures equal to or less than ½ PSIG (3.48 kPa).**

WARNING

To avoid property damage or personal injury, be sure there is <u>no open flame</u> in the vicinity during air bleeding.

There will be air in the gas supply line after testing for leaks on a new installation. Therefore, the air must be bled from the line by loosening the ground joint union until pure gas is expelled. Tighten union and wait for five minutes until all gas has been dissipated in the air. Be certain there is no open flame in the vicinity during air bleeding procedure. The unit is placed in operation by closing the main electrical disconnect switch for the unit.

PROPANE GAS INSTALLATIONS

WARNING

To avoid property damage, personal injury or death due to fire or explosion caused by a propane gas leak, install a gas detecting warning device. Since rust can reduce the level of odorant in propane gas, a gas detecting warning device is the only reliable way to detect a propane gas leak. Contact a local propane gas supplier about installing a gas detecting warning device.

IMPORTANT NOTE: Propane gas conversion kits must be installed to convert units to propane gas.

All propane gas equipment must conform to the safety

standards of NFPA 58 - Liquefied Petroleum Gas Code.

For satisfactory operation, propane gas pressure must be within 9.7 - 10.3 inches w.c. for high fire at the manifold with all gas appliances in operation. Maintaining proper gas pressure depends on three main factors:

1. Vaporization rate, which depends on (a) temperature of the liquid, and (b) wetted surface area of the container or containers.
2. Proper pressure regulation.
3. Pressure drop in lines between regulators, and between second stage regulator and the appliance. Pipe size required will depend on length of pipe run and total load of all appliances.

Tanks and Piping

Complete information regarding tank sizing for vaporization, recommended regulator settings and pipe sizing is available from most regulator manufacturers and propane gas suppliers.

Since propane gas will quickly dissolve white lead or most standard commercial compounds, special pipe dope must be used. Shellac base compounds resistant to the actions of liquefied petroleum gases such as Gasolac®, Stalactic®, Clyde's® or John Crane® are satisfactory.

See the following figure for typical propane gas piping.

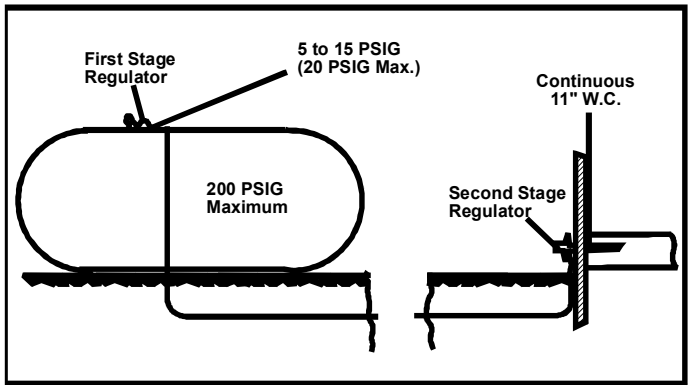

Typical propane gas piping

Roof Top Location and Installation

The gas supply piping location and installation for roof top units must be in accordance with local codes or, in the absence of locals codes, with ordinances of the latest edition of the National Fuel Gas Code ANSI Z223.1/NFPA 54.

A manual gas shut off valve must be field installed external to the roof top unit. In addition, a drip leg must be installed near the inlet connection. A ground joint union connection is required between the external shut off valve and the unit connection to the gas valve to permit removal of the burner assembly for servicing.

1. Route gas piping to unit so that it does not interfere with the removal of access panels. Support and align piping to prevent strains or misalignment of the manifold assembly.
2. All units are furnished with standard female 1/2" NPT pipe connections. The size of the gas supply piping to the unit must be based on length of run, number of units on the system, gas characteristics, BTU requirement and available supply pressure. All piping must be done in accordance with local codes or, in the absence of local codes, with the latest edition of the National Fuel Gas Code ANSI Z223.1/NFPA 54.

NOTE: The gas connection size at the unit does NOT establish the size of the supply line.

3. These units are designed for either natural or propane (LP) gas and are specifically constructed at the factory for natural gas. The fuels are NOT interchangeable. However, the furnace can be converted in the field from natural gas to LP gas with the appropriate factory kit (see unit Technical Manual for the appropriate kit). Only a qualified contractor, experienced with natural and propane gas systems, should attempt conversion. Kit instructions must be followed closely to assure safe and reliable unit operation.
4. With all units on a common line operating under full fire, natural gas main supply pressure should be adjusted to approximately 7.0" w.c., measured at the unit gas valve. If the gas pressure at the unit is greater than 10.0" w.c., the contractor must furnish and install an external type positive shut off service pressure regulator. The unit will not function satisfactorily if supply gas pressure is less than 5.0" w.c. or greater than 10.0" w.c..

NOTE: A minimum horizontal distance of 48" between the regulator and the furnace flue discharge is required.

5. With all units on a common line operating under full LP gas main supply pressure should be at least 11.0" w.c. and must be no greater than 13.0" w.c., measured at the unit gas valve. Unit will not function satisfactorily if supply gas pressure is less than 11.0" w.c. or greater than 13.0" w.c..
6. All pipe connections should be sealed with a pipe thread compound, which is resistant to the fuel used with the furnace. A soapy water solution should be used to check all joints for leaks. A tap is located on the entering side of the gas valve for test gauge connection to measure supply (main) gas pressure. Another tap is provided on the manifold side of the gas valve for checking manifold pressure.

WARNING

This unit and its individual shutoff valve must be DISCONNECTED from the gas supply system during any pressure testing of that system at test pressures in excess of ½ PSIG (13.8" w.c.).

CAUTION

This unit must be ISOLATED from the gas supply piping system by closing its individual manual shutoff valve during any pressure testing equal to or less than ½ PSIG.

7. There must be no obstruction to prevent the flow of combustion and ventilating air. A vent stack is not required and must never be used. The power venter will supply an adequate amount of combustion air as long as the air passageways are kept free of any obstructions and the recommended external unit clearances are maintained.

CIRCULATING AIR AND FILTERS

Ductwork

The supply duct from the unit through a wall may be installed without clearance. However, minimum unit clearances must be maintained (see "Clearances" section). The supply duct should be provided with an access panel large enough to inspect the air chamber downstream of the heat exchanger. A cover should be tightly attached to prevent air leaks.

Ductwork dimensions are shown in the roof curb installation manual.

If desired, supply and return duct connections to the unit may be made with flexible connections to reduce possible unit operating sound transmission.

CONDENSATE DRAIN CONNECTION

Condensate Drain Connection

A 3/4" female NPT drain connection is supplied on the end of the unit and bottom of the drain pan for condensate piping. An external trap must be installed for proper condensate drainage. Hand tighten drain fitting to the drain connection.

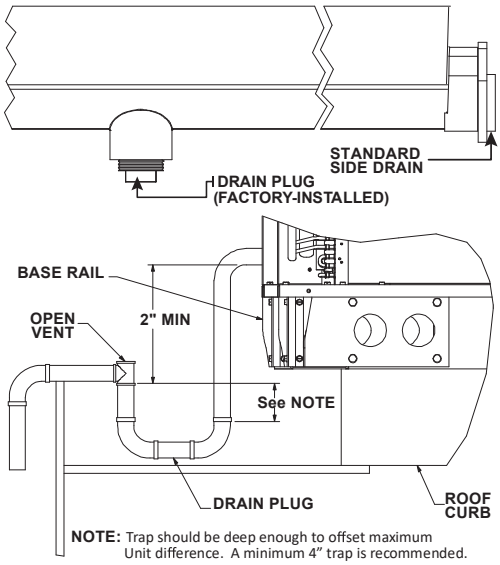

Drain Connection

Install condensate drain trap as shown. Use 3/4" drain line and fittings or larger. Do not operate without trap.

Horizontal Drain

Drainage of condensate directly onto the roof may be acceptable; refer to local code. It is recommended that a small drip pad of either stone, mortar, wood or metal be provided to prevent any possible damage to the roof.

Vertical Drain

To use the bottom drain connection, remove the drain plug from the bottom connection and install it in the horizontal connection.

Cleaning

Due to the fact that drain pans in any air conditioning unit will have some moisture in them, algae and fungus will grow due to airborne bacteria and spores. Periodic cleaning is necessary to prevent this build-up from plugging the drain. To remove drain pan for cleaning, remove the drain pan cover at first, then slide out the drain pan.

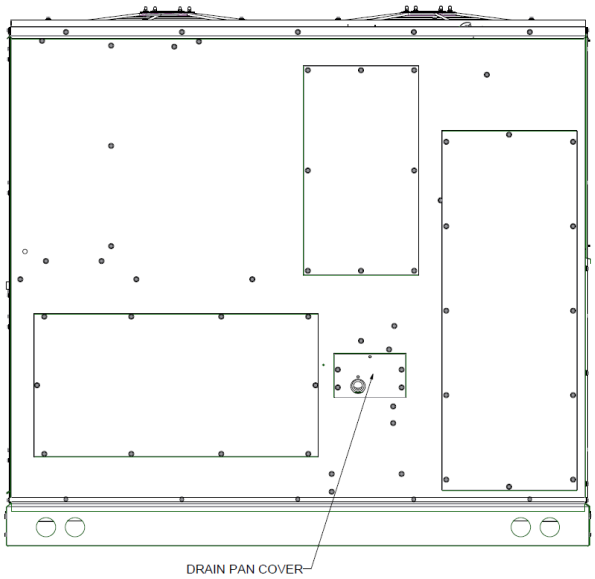

STARTUP, ADJUSTMENTS, AND CHECKS

WARNING

HIGH VOLTAGE!
TO AVOID PERSONAL INJURY OR DEATH DUE TO ELECTRICAL SHOCK, BOND THE FRAME OF THIS UNIT TO THE BUILDING ELECTRICAL GROUND BY USE OF THE GROUNDING TERMINAL PROVIDED OR OTHER ACCEPTABLE MEANS. DISCONNECT ALL POWER BEFORE SERVICING OR INSTALLING THIS UNIT.

PRE-STARTUP INSTRUCTIONS - GENERAL

CAUTION

TO PREVENT PROPERTY DAMAGE OR PERSONAL INJURY, DO NOT START THE UNIT UNTIL ALL NECESSARY PRE-CHECKS AND TESTS HAVE BEEN PERFORMED.

Prior to the beginning of Startup, Adjustments, and Checks procedures, the following steps should be completed in the building.

WARNING

MOVING MACHINERY HAZARD!
TO PREVENT POSSIBLE PERSONAL INJURY OR DEATH, DISCONNECT POWER TO THE UNIT AND PADLOCK IN THE "OFF" POSITION BEFORE SERVICING FANS.

This unit is equipped with an electronic ignition device to automatically light the main burners. It also has a power vent blower to exhaust combustion products.

On new installations, or if a major component has been replaced, the operation of the unit must be checked.

Check unit operation as outlined in the following instructions. If any sparking, odors, or unusual sounds are encountered, shut off electrical power and recheck for wiring errors, or obstructions in or near the blower motors. **Duct covers must be removed before operating unit.**

The Startup, Adjustments, and Checks procedure provides a step-by-step sequence which, if followed, will assure the proper startup of the equipment in the minimum amount of time. Air balancing of duct system is not considered part of this procedure. However, it is an important phase of any air conditioning system startup and should be performed upon completion of the Startup, Adjustments, and Checks procedure. The Startup, Adjustments, and Checks procedure at outside ambients below 55°F should be limited to a readiness check of the refrigeration system with the required final check and calibration left to be completed when the outside ambient rises above 55°F.

TEMPORARY HEATING OR COOLING

If the unit is to be used for temporary heating or cooling, a "Startup, Adjustments, and Checks" must first be performed in accordance with this manual. Damage or repairs due to failure to comply with these requirments are not covered under the warranty. **After** the machines are used for temporary heating or cooling, inspect the coils, fans, and motors for unacceptable levels of construction dust and dirt and install new filters.

CONTRACTOR RESPONSIBILITY

The installing contractor must be certain that:

- All supply and return air ductwork is in place, properly sealed, and corresponds with installation instructions.
- All thermostats and sensors are mounted and wired in accordance with installation instructions.
- All electric power, all gas, hot water or steam line connections, and the condensate drain installation have been made to each unit on the job. These main supply lines must be functional and capable of operating all units simultaneously.
- Requirements are met for venting and combustion air.
- Air filters are in place.
- Input rate and temperature rise are adjusted per rating plate.

ROOF CURB INSTALLATION CHECK

Inspect the roof curb for correct installation. The unit and curb assembly should be level. Inspect the flashing of the roof mounting curb to the roof, especially at the corners, for good workmanship. Also check for leaks around gaskets. Note any deficiencies in a separate report and forward to the contractor.

OBSTRUCTIONS, FAN CLEARANCE AND WIRING

Remove any extraneous construction and shipping materials that may be found during this procedure. Rotate all fans manually to check for proper clearances and that they rotate freely. Check for bolts and screws that may have jarred loose during shipment to the job site. Re-tighten if necessary. Re-tighten all electrical connections.

FIELD DUCT CONNECTIONS

Verify that all duct connections are tight and that there is no air bypass between supply and return.

FILTER SECTION CHECK

Remove filter section access panels and check that filters are properly installed. Note airflow arrows on filter frames.

PRE-STARTUP PRECAUTIONS

It is important to your safety that the unit has been properly grounded during installation. Check ground lug connection in main control box for tightness prior to closing circuit breaker or disconnect switch. Verify that supply voltage on line side of disconnect agrees with voltage on unit identification plate and is within the utilization voltage range as indicated in Appendix B Electrical Data.

System Voltage - That nominal voltage value assigned to a circuit or system for the purpose of designating its voltage class.

Nameplate Voltage - That voltage assigned to a piece of equipment for the purpose of designating its voltage class and for the purpose of defining the minimum and maximum voltage at which the equipment will operate.

Utilization Voltage - The voltage of the line terminals of the equipment at which the equipment must give fully satisfactory performance. Once it is established that supply voltage will be maintained within the utilization range under all system conditions, check and calculate if an unbalanced condition exists between phases. Calculate percent voltage unbalance as follows.

Three Phase Models Only

$$\text{3) PERCENT VOLTAGE UNBALANCE} = 100 \times \frac{\text{2) MAXIMUM VOLTAGE DEVIATIONS FROM AVERAGE VOLTAGE}}{\text{1) AVERAGE VOLTAGE}}$$

HOW TO USE THE FORMULA:
EXAMPLE: Line to Neutral Voltage of 220, 216, and 213
1) Average Voltage = 220+216+213=649 / 3 = 216
2) Maximum Voltage Deviations from Average Voltage = 220 - 216 = 4

$$\text{3) Percent Voltage Unbalance} = 100 \times \frac{4}{216} = \frac{400}{216} = 1.8\%$$

Percent voltage unbalance MUST NOT exceed 2%.

Control Voltage Check

Close the disconnect switch to energize control transformer. Check primary and secondary voltage (24V) of control transformer.

AIR FLOW ADJUSTMENTS

When the final adjustments are complete, the current draw of the motor should be checked and compared to the full load current rating of the motor. The amperage must not exceed the service factor stamped on the motor nameplate. The total airflow must not be less than that required for operation of the furnace.

If an economizer is installed, check the unit operating balance with the economizer at full outside air and at minimum outside air.

NOTE: Never run CFM below 300 CFM per ton evaporator freezing or poor unit performance is possible.

The unit has one set of taps for cooling (T1-T5) and a second set of taps for heating (T6-T10). When Heat is called TB1-W1 will also call TB1-DH activating the second set of taps T6-T10. If cooling and heating is called at the same time heating will take priority and T6-T10 will be chosen by default. Taps T1 and T2 are for low cool operation (cooling stage 1) and Taps T3 to T5 are for high cool operation (cooling stage 2). Taps T6 and T7 are for low heat operation (heating stage 1) and Taps T7 to T10 are for high heat operation (heating stage 2).

Taps are selected by changing the position of the low voltage leads on the terminal block TB1. Refer to Appendix A for blower performance at each speed tap.

Fan speed for G (Fan) is fixed at TB1-T1 and cannot be moved.

Low Cool Y1, Yellow (YL) is movable and set to TB1-T1.

Low Heat W1, White (WH) is movable and set to TB1-T6.

HIgh Cool Y2, Purple (PU) is movable and set to TB1-T3.

High Heat W2, Brown (BR) is movable and set to TB1-T8.

These wires can be moved together or separately and placed on any unoccuped terminal.

Note: YL can be moved to tap T2 as long as YL does not share the tap with PU. WH can be moved to tap T7 as long as WH does not share the tap with BR.

If more than one lead is energized simultaneously, the motor will run at the higher numercial speed tap.

If high cool operation is set at Tap 4 or T5, low cool operation must be set at T2.

If high heat operation is set at T9 or T10, low heat operation must be set at T7.

Note: On units with DDC controls installed, air flow adjustments are made through settings in the DDC controller and speed tap adjustments are not required. Refer to the DDC User Manual for details on making airflow adjustments. Individual settings are available for Fan Only, Low Stage Cooling, High Stage Cooling, Low Stage Heating, and High Stage Heating which can be adjusted as needed to meet airflow requirements.

DRG Model Wiring

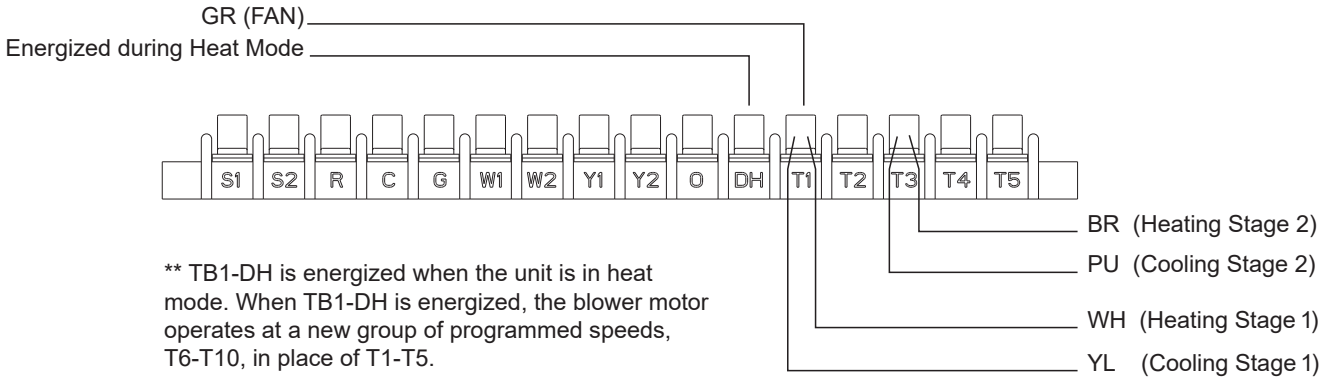

- Move YELLOW (YL) wire from TB1-T1 to T2 to change blower speed during cooling stage 1 operation. (Do not move wires YL and PU to the same taps)
- Move WHITE (WH) wire from TB1-T6 to T7 to change blower speed during heating stage 1 operation. (Do not move wires WH and BR to the same taps)
- Move PURPLE (PU) wire from TB1-T3 to T4 or T5 to change blower speed during cooling stage 2 operation. (Do not move wires YL and PU to the same taps)
- Move BROWN (BR) wire from TB1-T8 to T9 or T10 to change blower speed during heating stage 2 operation. (Do not move wires WH and BR to the same taps)

DRG OPERATION and WIRE RANGE CHART

DRG OPERATION							WIRE RANGE									
AC	G	Y1	Y2	W1	W2	DH	T1	T2	T3	T4	T5	T6	T7	T8	T9	T10
Fan Only	X						GR									
Cooling Mode LO	X	X					●→									
Cooling Mode HI	X	X	X						●→							
Heating Mode Lo	X			X								●→				
Heating Mode HI	X			X	X									●→		

X= 24V Signal

●→ = Range of AVAILABLE TAPS

For wire color information and placement, view DRG Model Wiring

Electrical Input Check

Make preliminary check of evaporator fan ampere draw and verify that motor nameplate amps are not exceeded. A final check of amp draw should be made upon completion of air balancing of the duct system (see Appendix B).\

GAS SYSTEM CHECK

Pre-Operation Checks

1. Close the manual gas valve external to the unit.
2. Turn off the electrical power supply to the unit.
3. Set the room thermostat to its lowest possible setting.
4. Remove the heat exchanger door on the side of the unit by removing screws.
5. This unit is equipped with an ignition device which automatically lights the main burner. DO NOT try to light burner by any other method.
6. Move the gas control valve switch to the OFF position.
7. Wait five minutes to clear out any gas.
8. Smell for gas, including near the ground. This is important because some types of gas are heavier than air. If you have waited five minutes and you do smell gas, immediately follow the warning WHAT TO DO IF YOU SMELL GAS on page 2 of this manual. If having waited for five minutes and no gas smell is noted, move the gas control valve switch to the ON position.
9. Replace the heat exchanger door on the side of the unit.
10. Open the manual gas valve external to the unit.
11. Turn on the electrical power supply to the unit.
12. Set the thermostat to desired setting.

Gas Supply Pressures & Regulator Adjustments

WARNING

Should overheating occur or the gas supply fail to shut off, turn off the manual gas shutoff valve external to the unit before turning off the electrical supply.

WARNING

To avoid property damage, personal injury or death, do not fire gas unit with flue box cover removed.

NOTE: Except during brief periods when gas pressures are being measured by qualified service personnel, the furnace access panel must always be secured in place when the furnace is in operation. An inspection port in the access panel is provided to monitor the flame.

The first step in checking out the gas-fired furnace is to test the gas supply piping to the unit for tightness and purge the system of air using methods outlined in the latest edition of the National Fuel Gas Code ANSI Z223.1 / NFPA 54. Verify that the disconnect switch is in the “OFF” position. A soapy water solution should be used to check for gas leaks. Since the unit is subject to considerable jarring during shipment, it is extremely important that all gas connections and joints be tested for tightness. Gas piping downstream from the unit inlet should be checked for leaks during the subsequent sequence check.

The supply gas pressure should be adjusted to 7.0” w.c. on natural gas and 11” to 13.0” w.c. on LP gas with the gas burners operating. If there is more than one unit on a common gas line, the pressures should be checked with all units under full fire. A supply pressure tap is provided on the upstream side of the gas valve. A manifold pressure tap is provided on the manifold side of the gas valve. The normal manifold pressure for High fire is 3.5” w.c. on natural gas and 10.0” w.c. for propane gas. Low fire natural gas 2.0” w.c., 6.0” w.c. low fire propane gas. Minimum gas supply pressure is 5.0” w.c. for natural gas and 11.0” w.c. for propane gas.

Do not attempt adjustment of the built-in pressure regulator unless the supply pressure is at least 5.0” w.c. on natural gas or 11.0” w.c. on propane gas.

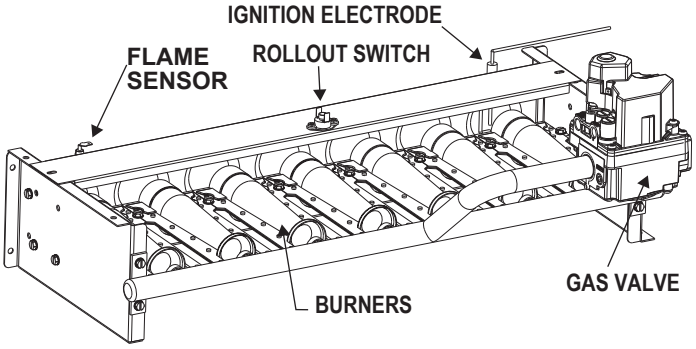

Burner and Manifold Assembly

TON	MODEL	HIGH FIRE RATE BTU / HR	No. of BURNERS	N.G. ORIFICE DRILL #	L.P. ORIFICE DRILL #
7.5	DRG090	130,000	5	41	54
		180,000	6	37	53
		225,000	7	36	52
8.5	DRG102	130,000	5	41	54
		180,000	6	37	53
		225,000	7	36	52
10	DRG120	130,000	5	41	54
		180,000	6	37	53
		240,000	7	34	51
12.5	DRG150	130,000	5	41	54
		180,000	6	37	53
		240,000	7	34	51

Heat Exchanger and Burner Orifice Specifications

NOTE: Gas appliances located more than 2000 feet above sea level must be derated 4% per 1000 feet of total elevation and that variance in gas heating value and specific gravity require change in manifold pressure to obtain rating, it is mandatory that the input be adjusted at the installation site. All installations should be made as outlined in the latest edition of the National Fuel Gas Code ANSI Z223.1,section "Procedures To Be Followed To Place An Appliance in Operation". Refer also to the "User's Information Manual" supplied with the unit for additional information on the gas furnace.

Gas Supply And Manifold Check

Gas supply pressure and manifold pressure with the burners operating must be as specified on the rating plate.

Gas Inlet Pressure Check

Gas inlet pressure must be checked and adjusted in accordance to the type of fuel being consumed.

With Power And Gas Off:

1. Connect a manometer to the inlet pressure tap of the gas valve.
   - Remove inlet pressure tap plug on the gas valve using 3/16" Allen wrench.
   - Install 1/8" NPT hose barb fitting into the pressure tap.
   - Connect the manometer to the fittings. The manometer must have a scale range of at least 0" to 20" w.c..

Inlet gas pressure can also be measured by removing the cap from the dripleg and installing a predrilled cap with a hose fitting.

With Power And Gas On:

2. Put unit into heating cycle and turn on all other gas consuming appliances.

INLET GAS PRESSURE	
NATURAL	Min. 5.0" W.C., Max. 10.0" W.C.
PROPANE	Min. 11.0" W.C., Max. 13.0" W.C.

NOTE: Inlet gas pressure must be within limits shown above.

If operating pressures differ from above, make necessary pressure regulator adjustments, check piping size, etc., and/or consult with local utility.

3. To remove manometer from the inlet pressure tap of the gas valve:
   - Turn off the gas and electrical supply to the unit.
   - Remove the manometer and hose barb fitting from the pressure tap of the gas valve.
   - Reinstall the pressure tap plug using pipe joint compound.
   - With supply gas ON, using leak detection solution, check for gas leaks around pressure tap. Bubbles forming indicate a leak. SHUT OFF GAS AND FIX ALL LEAKS IMMEDIATELY.

Gas Input (Natural Gas Only) Check

It is the responsibility of the contractor to adjust the gas input to the unit. To measure the gas input use a gas meter and proceed as follows:

1. Turn off gas supply to all other appliances except the unit.
2. With the unit operating, time the smallest dial on the meter for one complete revolution. If this is a 2 cubic foot dial, divide the seconds by 2; if it is a 1 cubic foot dial, use the seconds as is. This gives the seconds per cubic foot of gas being delivered to the unit.
3. INPUT=GAS HTG VALUE x 3600 / SEC. PER CUBIC FOOT

Example: Natural gas with a heating value of 1000 BTU per cubic foot and 34 seconds per cubic foot as determined by Step 2, then:

Input = 1000 x 3600 / 34 = 106,000 BTU per Hour.

NOTE: BTU content of the gas should be obtained from the gas supplier. This measured input must not be greater than shown on the unit rating plate.

Adjust input rate by varying the adjustment of the gas pressure regulator on the gas valve. All adjustments must be made with furnace operating at high fire and at normal operating temperature. A manometer should be connected to the gas valve to verify pressure is within the specified range.

Clockwise rotation of the pressure regulator screw increases pressure and gas fl ow rate. Turn screw counterclockwise to decrease pressure and gas fl ow rate. After adjustment the furnace temperature rise must be within the range specified on the unit data plate.

NOTE: Thermal efficiency of the furnace is a product efficiency rating determined under continuous operating conditions independent of any installed system.

Manifold Pressure Check and Adjustment

The gas valve has a pressure tap to facilitate measurement of the manifold pressure. The manifold pressure must be measured with the burners operating.

1. With disconnect switch open, remove field connected thermostat wire from terminal R, W1 and W2 on TB1. Place jumper wire between R, W1 and W2 to engage high stage heat.
2. See Figure in gas input check section for gas valve adjustment.

To adjust the pressure regulator, remove the adjustment screw cover on the gas valve. Turn the adustment screw out (counterclockwise) to decrease pressure, turn in (clockwise) to increase pressure. Only small variations in gas flow should be made by means of the pressure regulator adjustment. Any major changes in flow should be made by changing the size of the burner orifices. The measured input rate to the furnace must not exceed the rating specified on the unit rating plate.

For natural gas, the high stage manifold pressure must be between 3.2 and 3.8 inches water column (3.5 nominal). Low stage manifold pressure must be between 1.7 to 2.3 inches water column (2.0 nominal).

3. To set low fire rate, open disconnect switch and remove jumper from R to W2. To set low fire manifold pressure, repeat steps above. Refer to Figure in gas input check section for location of high and low stage pressure adjustment.

For propane gas, the manifold pressure must be between 9.7 and 10.3 inches water column (10.0 nominal). Low stage manifold must be between 5.7 and 6.3 inches water column (6.0 nominal).

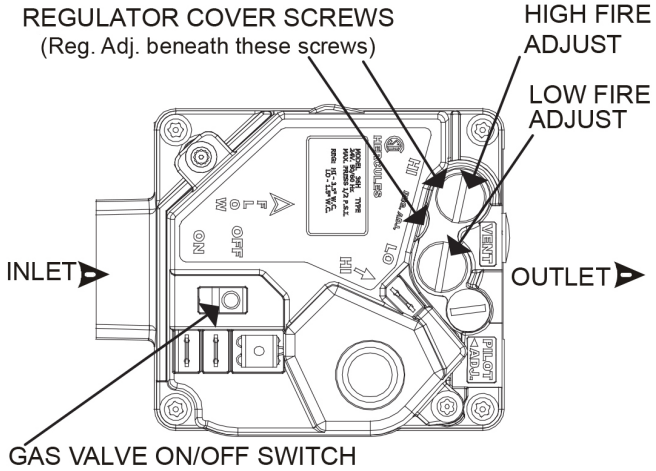

36H valve features

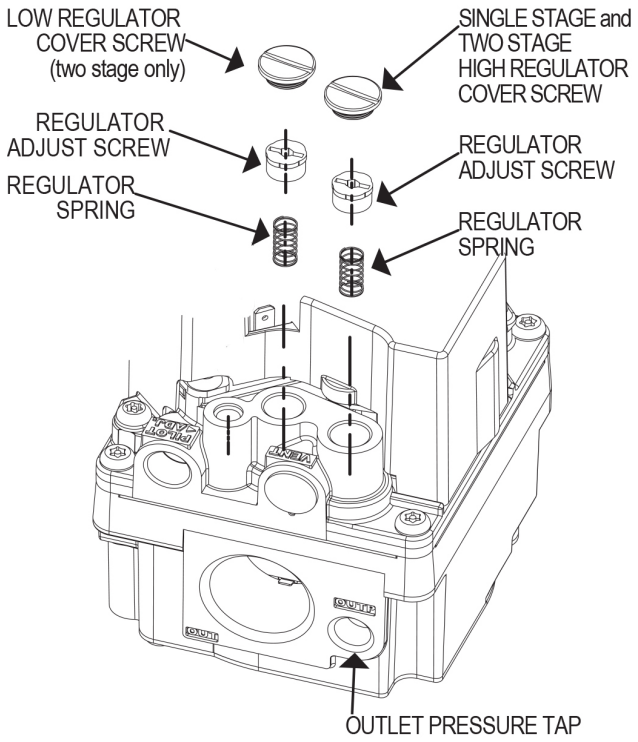

36H two-stage valve pressure regulator

White-Rodgers 2 Stage Gas Control Valve

To connect a manometer to the outlet pressure tap of the gas valve:

1. Turn off the gas and electrical supply to the unit
2. Remove outlet pressure tap plug on the gas valve using 3/16” Allen wrench
3. Install 1/8” NPT hose barb fitting into the pressure tap.
4. Connect the manometer to the fitting with a hose.

To remove manometer from gas valve:

1. Turn off the gas and electrical supply to the unit.
2. Remove the manometer and hose barb fitting from the pressure tap of the gas valve.
3. Reinstall the pressure tap plug using pipe joint compound

4. Turn on electrical power and gas supply to the system.
5. Turn on system power and energize valve.
6. Using leak detection solution, check for gas leaks around pressure tap. Bubbles forming indicate a leak. SHUT OFF GAS AND FIX ALL LEAKS IMMEDIATELY

CAUTION

To prevent unreliable operation or equipment damage, the gas manifold pressure must be specified on the unit rating plate. Only minor adjustments should be made by adjusting the gas valve pressure regulator.

Main Burner Flame Check

Flames should be stable, soft and blue (dust may cause orange tips but they must not be yellow) and extending directly outward from the burner without curling, floating or lifting off.

Temperature Rise Check

Check the temperature rise through the unit by placing thermometers in supply and return air registers as close to the unit as possible. Thermometers must not be able to sample temperature directly from the unit heat exchangers, or false readings could be obtained.

1. All registers must be open; all duct dampers must be in their final (fully or partially open) position and the unit operated for 15 minutes before taking readings
2. The temperature rise must be within the range specified on the rating plate.

NOTE: Air temperature rise is the temperature difference between supply and return air.

With a properly designed system, the proper amount of temperature rise will normally be obtained when the unit is operated at rated input with the recommended blower speed.

If the correct amount of temperature rise is not obtained, it may be necessary to change the blower speed. A higher blower speed will lower the temperature rise. A slower blower speed will increase the temperature rise.

NOTE: Blower speed MUST be set to give the correct air temperature rise through the unit as marked on the rating plate.

NORMAL SEQUENCE OF OPERATION

Heating

NOTE: On units with DDC controls option installed, refer to the DDC controller user manual for sequence of operation details.

1. With electricity and gas turned on, the system switch in the “HEAT” or “AUTO” position and the fan switch in the “AUTO” position, the thermostat will close the circuit between unit terminals R and W (R-W) when the temperature falls below the thermostat setting.
2. D1 on IIC energizes venter motor contactor.
3. Relay IDMR energizes the venter motor IDM.
4. Operation of the venter motor closes the pressure switch PS located in the burner compartment. Unless excessive temperatures have opened high limit control ALS, power is fed to the integrated ignition control, which then initiates a 15-second pre-purge time delay. During this period, the venter fan will clear the combustion chamber of any residual gas.
5. After the pre-purge period, the ignition control energizes the WI-C gas valve and simultaneously initiates a “three (3)-try” spark ignition sequence.
6. When the burners are ignited, a minimum four (4) micro-amp DC current will flow through the flame between the sensor electrode and the grounded burner.
7. When the controller proves that the flame has been established, it will keep the gas valve energized and discontinue the ignition spark.
8. If the control is unable to ignite the burners after its initial attempt, it will initiate another purge and spark sequence. A third purge and spark sequence will be initiated if the second attempt is unsuccessful. If the third attempt is unsuccessful, the controller will close the gas valve and lock itself out. It may be reset by momentarily interrupting power. This may be accomplished by briefly lowering the room thermostat set-point below room temperature, or by shutting off the main power to the unit.
9. Integrated ignition control will close its normally open contacts after a delay of approximately 30 seconds. This action energizes the blower motor contactor and starts the supply fan motor. Operation of the supply fan circulates air across the heat exchanger and delivers heated air to the conditioned space.
10. When the space temperature rises, the thermostat will open R-W. Opening R-W will cause the gas valve to close, and the furnace to shut down.
11. The furnace has three high temperature limit controls, which can shut down the burner. They do not shut down the vent motor.

This unit is equipped with an ignition control that automatically lights the main burner. DO NOT attempt to light the main burners by any other method.

12. R and W thermostat contacts close, initiating a call for heat.
13. integrated control module performs safety circuit checks.
14. Inducer draft blower is energized for 30 second prepurge period causing pressure sensor contacts to close.
15. At the end of pre-purge period, integrated control module transitions the induced draft blower to light-off setting.

16. Once the light-off pressure setting is verified by the integrated control module, the spark igniter and gas valve are energized for 4 seconds.

NOTE: The igniter produces a very intense electrical spark that ignites the gas.

17. Integrated control module monitors flame presence. Gas valve will remain open only if the flame is detected.
18. The 30-second HEAT FAN ON delay time begins after main burner lights.
19. The unit delivers heat to the conditioned space until the thermostat temperature setting is reached. The integrated control module monitors the safety circuits continuously.
20. R and W thermostat contacts open, completing the call for heat; gas valve de-energizes.
21. Induced draft blower keeps operating for 30-seconds post purge.
22. Ignition control beings timing the HEAT FAN OFF delay. There is an adjustable HEAT FAN OFF delay of approximately 90/120/150/180 seconds (factory set at 150).

NOTE: This delay allows any additional heat in the heat exchanger to be transferred to the conditioned space. After the HEAT FAN OFF delay time has elapsed, the blower will de-energize.

Unit Shutdown

1. Set the room heating setpoint to lowest setting.
2. Turn off the electrical power supply to the unit.
3. Remove the heat exchanger door on the side of the unit by removing screws.
4. Move the gas control valve switch to the OFF position.
5. Close manual gas shut off valve external to the unit.
6. Replace the heat exchanger door on the unit.
7. If cooling and/or air circulation will be desired, turn ON gas control valve switch and the electrical power.

Automatic Reset High Limit Control (LS)

Located on the heat exchanger side of the partition panel, the primary limit switch senses the discharge air temperature. It will cycle the furnace off if the discharge air temperature exceeds 200°F.

Blocked Inlet Limit Control

The Blocked Inlet Limit Control is located in the burner compartment at the top of the burner assembly and senses high temperature that could occur if the burner inlet is blocked.

Auxiliary High Limit Control (ALS)

Located in the blower compartment on the blower housing, it senses air temperature within the blower compartment and protects the filters from excessive temperature. It will shut down the furnace if it senses excessive temperatures. Elevated temperatures at the control are normally caused by blower failure. The reason for the shut down should be determined and repaired prior to resetting.

Manual Reset Flame Rollout Control (RS)

Located in the burner compartment at the top of the burner assembly, it senses high temperature that could occur if the heat exchanger tubes were plugged and the flame was rolling out instead of entering the tubes. It has a manual push-button reset that cannot be actuated until the limit control has cooled.

The reason for elevated temperatures at the control should be determined and repaired prior to resetting this manual reset control.

WARNING

To avoid property damage, personal injury or death due to fire or explosion, a qualified servicer must investigate the reason for the rollout protection device to open before manually resetting the rollout protection device.

Refrigeration System Checks

This unit is equipped with thermal expansion valves.

Ensure the hold-down bolts on the compressor are secure and have not vibrated loose during shipment. Check that the vibration grommets have been installed and visually check all piping for damage and leaks and repair if necessary. The entire system has been factory charged and tested, making it unnecessary to field charge. Factory refrigerant charge is shown on the unit's nameplate.

To confirm charge levels or, if a leak occurs and charge needs to be added to the system, it is recommended to evacuate the system and recharge refrigerant to the unit's nameplate specifications. This unit has been rated in the cooling mode at the AHRI rated conditions of: indoor (80°F db/67°F wb) and outdoor (95°F db). While operating at this condition, the superheat should range from 9°F to 11°F for each refrigeration circuit measured at the suction service port located near the compressor.

Start-Up Procedure and Checklist

Begin with power turned off at all disconnects.

1. Turn thermostat system switch to "Cool," and fan switch to "Auto" and turn temperature setting as high as it will go. On units with DDC controls installed, use Test/Balance Menu to force the unit to OFF MODE.
2. Inspect all registers and set them to the normal open position.
3. Turn on the electrical supply at the disconnect.
4. Turn the fan switch to the "ON" position. The blower should operate after a 7 second delay. On units with DDC controls installed, use Test/Balance Menu to force the unit to VENT MODE. This test bypasses internal delays.

5. Turn the fan switch to “Auto” position. The blower should stop after a 60 second delay. On units with DDC controls installed, use Test/Balance Menu to force the unit to OFF MODE. This test bypasses internal delays.

6. Slowly lower the cooling temperature until the unit starts. The compressor, blower and fan should now be operating. Allow the unit to run 10 minutes, make sure cool air is being supplied by the unit. On units with DDC controls installed, use Test/Balance Menu to force the unit to Low Cool Mode or High Cool Mode. This test bypasses internal delays.

7. Turn the temperature setting to the highest position, stopping the unit. The indoor blower will continue to run for 60 seconds. On units with DDC controls installed, use Test/Balance Menu to force the unit to VENT MODE. This test bypassed internal delays.

8. Turn the thermostat system switch to “OFF” and disconnect all power when servicing the unit. On units with DDC controls installed, use Test/Balance Menu to disable FORCE MODE operation and allow the unit to return to normal operation.

Refrigeration Sequence Check

With the disconnect switch open, remove the field connected thermostat wire from terminal R on TB1 terminal block. Place a jumper across terminals R and G, and across R and Y on TB1 terminal block. Close the disconnect switch. The following operational sequence should be observed. On units with DDC controls installed, use TEST/Balance Menu to force the unit to Cool Mode. This test bypasses internal delays.

1. Current through primary winding of transformer TR1 energizes the 24-volt control circuit.
2. To simulate a mechanical call for cooling from the wall thermostat, place a jumper across terminals R and Y1 of terminal block TB1. The cooling is energized when the room temperature is above the thermostat set-point for cooling. The thermostat makes R to Y.
3. **UNIT WITH ECONOMIZER OPTION:** The compressor circuit is interlocked through of the economizer module. If the outdoor air enthalpy (temperature and humidity) is not suitable for cooling, the economizer will permit the compressor to be energized.
4. The blower contactor closes its contacts providing power to the supply fan motor.
5. Check supply fan rotation. If the supply fan is rotating in the wrong direction, please contact your local distributor or tech services for instructions.
6. Compressor contactor closes its contacts L1, L2 and L3 to T1, T2 and T3 to provide power to the compressor motor COMP. 1 and to COMP. 2 if conditions are correct. In addition, contactor C1 closes its contact L3 to T3 energizing the condenser fan motor.

WARNING

BURN HAZARD!
DO NOT TOUCH! DISCHARGE LINE MAY BE HOT!

7. Check that each compressor is operating correctly. The scroll compressors in these units MUST operate in the proper rotation. To ensure the compressors are operating in the correct direction, check the compressor discharge line pressure or temperature after the compressor is started.
   The discharge pressure and discharge line temperature should increase. If this does not occur and the compressor is producing an exceptional amount of noise, perform the following checks.
   - Ensure all compressors are operating in the proper direction. If a single motor is operating backwards, check the power wiring for that motor and correct any leads that have been interchanged at the contactor or at the motor.
   - If all of the motors are operating backward, disconnect the unit power supply and lock it in the “OFF” position. Switch two leads of the power supply at the unit Single Point Power Block. Reconnect power and check for compressor and supply fan motor operation.
8. With all safety devices closed, the system will continue cooling operation until the thermostat is satisfied.
9. Disconnecting the jumper wire between R and Y1 and Y2 and between R and G on TB1 terminal block will simulate a satisfied thermostat. The compressor will cycle off and IIC (pin 12) will initiate its time delay cycle. The compressor and the supply fan will cycle off.
10. After a time delay of approximately 3 minutes, the compressor control circuits will be ready to respond to a subsequent call for cooling from the wall thermostat.
11. Open disconnect switch. Reconnect the field thermostat wire at terminal R on terminal block TB1.
12. On units with DDC controls installed, use Test/Balance Menu to force the unit to Vent Mode. Use Test/Balance Menu to disable Force Mode operation and allow the unit to return to normal operation.

Refrigeration Performance Check

Check that compressor RLA corresponds to values shown in Appendix B. RLA draw can be much lower than values listed at low load conditions and low ambient condensing temperatures. Values maybe slightly higher than those shown in Appendix B at high load conditions and high ambient condensing temperatures.

Final System Checks

1. Check to see if all supply and return air grilles are adjusted and the air distribution system is balanced for the best compromise between heating and cooling.
2. Check for air leaks in the ductwork. See Sections on Air Flow Adjustments.
3. Make sure the unit is free of “rattles”, and the tubing in the unit is free from excessive vibration. Also make sure tubes or lines are not rubbing against each other or sheet metal surfaces or edges. If so, correct the trouble.
4. Set the thermostat at the appropriate setting for cooling and heating or automatic changeover for normal use.
5. Be sure the Owner is instructed on the unit operation, filter, servicing, correct thermostat operation, etc.

MAINTENANCE

WARNING

ELECTRICAL SHOCK, FIRE OR EXPLOSION HAZARD

Failure to follow safety warnings exactly could result in dangerous operation, serious injury, death or property damage.

Improper servicing could result in dangerous operation, serious injury, death or property damage.

- **Before servicing, disconnect all electrical power to furnace.**
- **When servicing controls, label all wires prior to disconnecting. Reconnect wires correctly.**
- **Verify proper operation after servicing.**

WARNING

HIGH VOLTAGE!

Disconnect all power before servicing or installing this unit. Multiple power sources may be present. Failure to do so may cause property damage, personal injury or death.

WARNING

To prevent personal injury or death due to improper installation, adjustment, alteration, service or maintenance, refer to this manual. For additional assistance or information, consult a qualified installer, servicer agency or the gas supplier.

CAUTION

Sheet metal parts, screws, clips and similar items inherently have sharp edges, and it is necessary that the installer and service personnel exercise caution.

Preventive maintenance is the best way to avoid unnecessary expense and inconvenience. Have this system inspected at regular intervals by qualified service personnel, at least twice a year. Routine maintenance should cover the following items:

1. Tighten all set screws, and wire connections.
2. Clean evaporator and condenser coils mechanically or with cold water, if necessary. Usually any fouling is only matted on the entering air face of the coil and can be removed by brushing.
3. Replace filters as needed (see below).
4. Check for blockage of condensate drain.
5. Check power and control voltages.
6. Check running amperage.
7. Check operating temperatures and pressures.
8. Check and adjust temperature and pressure controls.
9. Check and adjust damper linkages.
10. Check operation of all safety controls.
11. Examine gas furnaces (see below and the User’s Information Manual).
12. Check condenser fans and tighten set screws.

Filters

CAUTION

To prevent property damage due to fire and loss of equipment efficiency or equipment damage due to dust and lint build up on internal parts, never operate unit without an air filter installed in the return air system.

Every application may require a different frequency of replacement of dirty filters. Filters must be replaced at least every three (3) months during operating seasons.

Dirty filters are the most common cause of inadequate heating or cooling performance. Filter inspection should be made at least every two months; more often if necessary because of local conditions and usage.

Dirty throwaway filters should be discarded and replaced with a new, clean filter.

Disposable return air filters are supplied with this unit. See the unit Specification Sheet or Technical Manual for the correct size and part number. To remove the filters, remove the filter access panel on return side of the unit.

Cabinet Finish Maintenance

Use a fine grade automotive wax on the cabinet finish to maintain the finish's original high luster. This is especially important in installations with extended periods of direct sunlight.

Clean Outside Coil (Qualified Servicer Only)

The coil with the outside air flowing over it should be inspected annually and cleaned as frequently as necessary to keep the finned areas free of lint, hair and debris.

Condenser And Induced Draft Motors

Bearings on the condenser fan motors and the combustion fan motor are permanently lubricated. No additional oiling is required.

Flame Sensor (Qualified Servicer Only)

A drop in the flame current can be caused by a nearly invisible coating on the flame sensor. This coating, created by the fuel or combustion air supply, can be removed by carefully cleaning the flame sensor with steel wool.

NOTE: After cleaning, the microamp signal should be stable and in the range of 4 - 6 microamps DC.

Flue Passages (Qualified Servicer Only)

At the start of each heating season, inspect and, if necessary, clean the unit flue passage.

Lubrication

The fan shaft bearings, the supply fan motors, the condenser fan motors and compressors are permanently lubricated.

Inspection & Cleaning

All flue product carrying areas of the furnace, its vent system, and main burners should be examined by a qualified service agency, and cleaned if necessary, before the start of each heating season. This examination is necessary for continued safe operation. Particular attention should be given to deterioration from corrosion or other sources. This examination is accomplished in the following manner.

1. Disconnect power to the unit and remove furnace section access panel.
2. Remove burner assembly:
   a. Disconnect the wires from the gas valve after noting which wires are connected to each terminal.
   b. Disconnect wires from the flame rod and ignition electrode.
   c. Disconnect the gas piping at the union.
   d. The entire burner assembly can now be removed from the unit.

NOTE: Use all screws that were removed; they are necessary for safe and proper operation of the unit.

3. Inspect and periodically clean the vent outlet (bird screen) on the access panel.

NOTE: Periodic observation of the flame and a log of $C0_2$ measurements are recommended. This will aid in determining whether the furnace is operating efficiently or if the furnace requires cleaning.

Flames should be stable, soft and blue (dust may cause orange tips but must not be yellow). The flames must extend directly outward from the burner without curling, floating or lifting off.

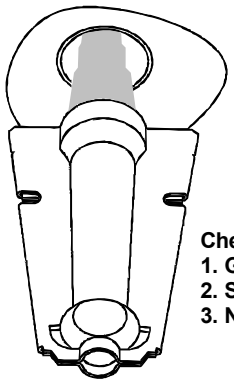

Check the burner flames for:
1. Good adjustment
2. Stable, soft and blue
3. Not curling, floating, or lifting off.

Burner Flame

WARNING

To avoid personal injury or death due to electric shock, do not remove any internal compartment covers or attempt any adjustment. Contact a qualified servicer at once if an abnormal flame should develop.

At least once a year, prior to or during the heating season, make a visual check of the burner flames.

NOTE: This will involve removing and reinstalling the heat exchanger door on the unit, which is held by two screws. If you are uncertain about your ability to do this, contact a qualified servicer.

If a strong wind is blowing, it may alter the airflow pattern within the unit enough that an inspection of the burner flames is not possible.

Functional Parts

Refer to the unit Parts Catalog for a list of functional parts. Parts are available from your distributor.

TROUBLESHOOTING

Ignition Control Error Codes

The following presents probable causes of questionable unit operation. Refer to *Diagnostic Indicator Chart* for an interpretation of the signal and to this section for an explanation.

Remove the control box access panel and note the number of diagnostic LED flashes.

Internal Control Failure

If the integrated ignition control in this unit encounters an internal fault, it will go into a "hard" lockout and turn off the diagnostic LED. If diagnostic LED indicates an internal fault, check power supply to unit for proper voltage, check all fuses, circuit breakers and wiring. Disconnect electric power for five seconds. If LED remains off after restoring power, replace control.

Abnormal Operation - Heating Codes

External Lockout (1 FLASH CODE)

An external lockout occurs if the integrated ignition control determines that a measurable combustion cannot be established within three (3) consecutive ignition attempts. If flame is not established within the seven (7) second trial for ignition, the gas valve is deenergized, 15 second inter-purge cycle is completed, and ignition is reattempted. The control will repeat this routine three times if a measurable combustion is not established. The control will then shut off the induced draft blower and go into a lockout state.

If flame is established but lost, the control will energize the circulator blower at the heat speed and then begin a new ignition sequence. If flame is established then lost on subsequent attempts, the control will recycle for four (4) consecutive ignition attempts (five attempts total) before locking out.

The diagnostic fault code is 1 flash for a lockout due to failed ignition attempts or flame dropouts. The integrated control will automatically reset after one hour, or it can be reset by removing the thermostat signal or disconnecting the electrical power supply for over five seconds. If the diagnostic LED indicates an external lockout, perform the following checks:

- *Check the supply and manifold gas pressures*
- *Check the gas orifices for debris*
- *Check gas valve for proper operation*
- *Check secondary limit*

A dirty filter, excessive duct static, insufficient air flow, a faulty limit, or a failed circulator blower can cause this limit to open. Check filters, total external duct static, circulator blower motor, blower motor speed tap (see wiring diagram) and limit. An interruption in electrical power during a heating cycle may also cause the auxiliary limit to open. The automatic reset secondary limit is located on top of the circulator blower assembly.

- *Check rollout limit*

If the burner flames are not properly drawn into the heat exchanger, the flame rollout protection device will open. Possible causes are restricted or blocked flue passages, blocked or cracked heat exchanger, a failed induced draft blower, or insufficient combustion air. The rollout protection device is a manual reset limit located on the burner bracket. The cause of the flame rollout must be determined and corrected before resetting the limit.

- *Check flame sensor*

A drop in flame signal can be caused by nearly invisible coating on the sensor. Remove the sensor and carefully clean with steel wool.

- *Check wiring*

Check wiring for opens/shorts and miswiring.

IMPORTANT: If you have to frequently reset your gas/electric package unit, it means that a problem exists that should be corrected. Contact a qualified servicer for further information.

Pressure Switch Stuck Open (2 FLASH CODE)

IA pressure switch stuck open can be caused by a faulty pressure switch, faulty wiring, a disconnected or damaged hose, a blocked or restricted flue, or a faulty induced draft blower. If the control senses an open pressure switch during the pre-purge cycle, the induced draft blower only will be energized.

If the pressure switch opens after ignition has begun the gas valve is deenergized, the circulator blower heat off cycle begins, and the induced draft blower remains on. The diagnostic fault code is two flashes.

Pressure Switch Stuck Closed (3 FLASH CODE)

A stuck closed pressure switch can be caused by a faulty pressure switch or faulty wiring. If the control encounters a pressure switch stuck closed, the induced draft blower remains off. The diagnostic LED code for this fault is three (3) flashes.

Open Thermal Protection Device (4 FLASH CODE)

If the primary limit switch opens, the gas valve is immediately deenergized, the induced draft and air circulating blowers are energized. The induced draft and air circulator blowers remain energized until the limit switch recloses. The diagnostic fault code for an open limit is four (4) flashes.

A primary limit will open due to excessive supply air temperatures. This can be caused by a dirty filter, excessive duct static, insufficient air flow, or a faulty limit. Check filters, total external duct static, blower motor, blower motor speed tap (see wiring diagram), and limit. This limit will automatically reset once the temperature falls below a preset level.

Flame Detected with Gas Valve Closed (5 FLASH CODE)

If flame is detected with the gas valve deenergized, the combustion and air circulator blowers are energized. The diagnostic fault code is five (5) flashes for this condition. The control can be reset by removing the power supply to the unit or it will automatically reset after one hour. Miswiring is the probable cause for this fault.

Abnormal Operation - Cooling Codes

Short Cycle Compressor Delay (6 FLASH CODE)

The automatic ignition control has a built-in feature that prevents damage to the compressor in short cycling situations. In the event of intermittent power losses or intermittent thermostat operation, the ignition control will delay output to the compressor contactor for three minutes from the time power is restored. (Compressor is off a total of three minutes). The diagnostic LED will flash six (6) times to indicate the compressor contactor output is being delayed.

NOTE: Some electronic thermostats also have a built-in compressor short cycle timer that may be longer than the three minute delay given above. If you are using an electronic thermostat and the compressor has not started after three minutes, wait an additional five minutes to allow the thermostat to complete its short cycle delay time.

APPENDIX A BLOWER PERFORMANCE TABLES

7.5 Ton
130 MBH Gas Heat Exchanger
Standard Static Direct Drive
Models: DRG0903DL, DRG0904DL, DRG0907DL

Down Flow					Horizontal Flow				
Speed Tap	ESP	CFM	RPM	BHP	Speed Tap	ESP	CFM	RPM	BHP
T1	0.2	1882	544	0.38	T1	0.2	2029	488	0.34
	0.4	-	-	-		0.4	-	-	-
	0.6	-	-	-		0.6	-	-	-
	0.8	-	-	-		0.8	-	-	-
T2	0.2	2589	629	0.67	T2	0.2	2748	571	0.61
	0.4	2410	681	0.73		0.4	2554	627	0.67
	0.6	2216	734	0.79		0.6	2337	697	0.75
	0.8	2038	782	0.84		0.8	2148	750	0.80
T3	0.2	3144	708	1.01	T3	0.2	3289	649	0.93
	0.4	2961	753	1.08		0.4	3133	690	0.99
	0.6	2802	799	1.14		0.6	2972	745	1.06
	0.8	2651	841	1.20		0.8	2802	792	1.13
T4	0.2	3413	753	1.23	T4	0.2	3539	693	1.13
	0.4	3222	794	1.29		0.4	3419	726	1.18
	0.6	3070	836	1.36		0.6	3282	773	1.26
	0.8	2940	875	1.43		0.8	3132	816	1.33
T5	0.2	3622	793	1.43	T5	0.2	3724	732	1.32
	0.4	3422	830	1.50		0.4	3647	757	1.37
	0.6	3268	868	1.57		0.6	3525	797	1.44
	0.8	3160	904	1.64		0.8	3401	836	1.51
T6	0.2	1901	546	0.38	T6	0.2	2048	490	0.34
	0.4	1713	605	0.42		0.4	1853	561	0.39
	0.6	1453	667	0.47		0.6	1559	646	0.45
	0.8	-	-	-		0.8	1374	707	0.49
T7	0.2	2107	569	0.46	T7	0.2	2260	513	0.41
	0.4	1922	627	0.50		0.4	2061	580	0.47
	0.6	1684	686	0.55		0.6	1791	660	0.53
	0.8	1495	738	0.59		0.8	1602	719	0.58
T8	0.2	2301	592	0.54	T8	0.2	2458	535	0.49
	0.4	2119	648	0.59		0.4	2259	598	0.54
	0.6	1900	704	0.64		0.6	2011	674	0.61
	0.8	-	-	-		0.8	1820	731	0.66
T9	0.2	2920	674	0.86	T9	0.2	3074	616	0.79
	0.4	2740	722	0.92		0.4	2897	663	0.85
	0.6	2569	771	0.98		0.6	2715	724	0.92
	0.8	2405	816	1.04		0.8	2534	774	0.99
T10	0.2	3427	756	1.24	T10	0.2	3552	696	1.14
	0.4	3236	797	1.31		0.4	3435	728	1.20
	0.6	3084	838	1.38		0.6	3299	774	1.27
	0.8	2955	877	1.44		0.8	3151	817	1.34

7.5 Ton
130 MBH Gas Heat Exchanger
Medium Static Direct Drive
Models: DRG0903LL, DRG0904LL, DRG0907LL

Down Flow					Horizontal Flow				
Speed Tap	ESP	CFM	RPM	BHP	Speed Tap	ESP	CFM	RPM	BHP
T1	0.2	1882	544	0.38	T1	0.2	2029	488	0.34
	0.4	-	-	-		0.4	-	-	-
	0.6	-	-	-		0.6	-	-	-
	0.8	-	-	-		0.8	-	-	-
	1.0	-	-	-		1.0	-	-	-
	1.2	-	-	-		1.2	-	-	-
	1.4	-	-	-		1.4	-	-	-
T2	0.2	3059	695	0.95	T2	0.2	3208	636	0.87
	0.4	2877	741	1.01		0.4	3043	680	0.93
	0.6	2714	788	1.08		0.6	2874	737	1.01
	0.8	2558	831	1.14		0.8	2699	785	1.07
	1.0	2412	870	1.19		1.0	2519	829	1.13
	1.2	2218	922	1.26		1.2	2312	884	1.21
	1.4	2028	965	1.32		1.4	2103	948	1.30
T3	0.2	3144	708	1.01	T3	0.2	3289	649	0.93
	0.4	2961	753	1.08		0.4	3133	690	0.99
	0.6	2802	799	1.14		0.6	2972	745	1.06
	0.8	2651	841	1.20		0.8	2802	792	1.13
	1.0	2493	880	1.26		1.0	2632	836	1.19
	1.2	2307	930	1.33		1.2	2436	889	1.27
	1.4	-	-	-		1.4	-	-	-
T4	0.2	-	-	-	T4	0.2	-	-	-
	0.4	3622	874	1.77		0.4	-	-	-
	0.6	3458	907	1.83		0.6	-	-	-
	0.8	3380	940	1.90		0.8	3693	861	1.74
	1.0	3265	975	1.97		1.0	3575	905	1.83
	1.2	3138	1008	2.04		1.2	3461	941	1.90
	1.4	2994	1043	2.11		1.4	3345	991	2.00
T5	0.2	-	-	-	T5	0.2	-	-	-
	0.4	3725	901	1.94		0.4	-	-	-
	0.6	3549	931	2.00		0.6	-	-	-
	0.8	3492	961	2.07		0.8	-	-	-
	1.0	3423	996	2.15		1.0	3737	920	1.98
	1.2	3307	1026	2.21		1.2	3633	952	2.05
	1.4	3180	1059	2.28		1.4	3524	999	2.15
T6	0.2	2139	573	0.47	T6	0.2	2293	516	0.42
	0.4	1955	630	0.52		0.4	2093	583	0.48
	0.6	1720	689	0.57		0.6	1827	663	0.54
	0.8	1531	741	0.61		0.8	1637	721	0.59
	1.0	1623	782	0.64		1.0	-	-	-
	1.2	1351	849	0.70		1.2	-	-	-
	1.4	-	-	-		1.4	-	-	-
T7	0.2	2691	642	0.73	T7	0.2	2849	584	0.66
	0.4	2512	693	0.78		0.4	2659	638	0.72
	0.6	2325	745	0.84		0.6	2453	705	0.80
	0.8	2152	792	0.90		0.8	2265	757	0.86
	1.0	2079	832	0.94		1.0	2034	801	0.91
	1.2	1854	890	1.01		1.2	1777	864	0.98
	1.4	1662	937	1.06		1.4	1511	932	1.05
T8	0.2	3162	711	1.02	T8	0.2	3307	652	0.94
	0.4	2979	756	1.09		0.4	3152	692	1.00
	0.6	2820	801	1.15		0.6	2993	747	1.08
	0.8	2671	843	1.22		0.8	2824	794	1.14
	1.0	2511	882	1.27		1.0	2657	837	1.21
	1.2	2326	931	1.34		1.2	2463	891	1.28
	1.4	2139	974	1.40		1.4	2269	952	1.37
T9	0.2	3681	805	1.50	T9	0.2	3774	744	1.39
	0.4	3477	842	1.57		0.4	3713	767	1.43
	0.6	3322	878	1.64		0.6	3594	804	1.50
	0.8	3220	913	1.70		0.8	3478	843	1.57
	1.0	3066	950	1.77		1.0	3356	886	1.65
	1.2	2925	987	1.84		1.2	3226	927	1.73
	1.4	2765	1024	1.91		1.4	3096	980	1.83
T10	0.2	-	-	-	T10	0.2	-	-	-
	0.4	3811	927	2.12		0.4	-	-	-
	0.6	3620	954	2.18		0.6	-	-	-
	0.8	3586	983	2.25		0.8	-	-	-
	1.0	3578	1017	2.32		1.0	3881	936	2.14
	1.2	3471	1043	2.38		1.2	3786	964	2.20
	1.4	3363	1074	2.45		1.4	3680	1008	2.30

Note:

- Taps T1 and T2 are for first stage of cooling only. Taps T6 and T7 are for first stage of heating only. Refer to page 11 for speed tap selection.
- Shaded area are not recommended for cooling or heating operation.
- Airflow table includes resistance for base unit only with 2" clean air filters in place.
  Any Additional air resistance caused by factory or field installed options or accessories must be added to the ESP in order to select the correct speed tap.

APPENDIX A BLOWER PERFORMANCE TABLES

7.5 Ton
130 MBH Gas Heat Exchanger
High Static Direct Drive
Models: DRG0903WL, DRG0904WL, DRG0907WL

Down Flow				
Speed Tap	ESP	CFM	RPM	BHP
T1	0.2	1882	544	0.38
	0.4	-	-	-
	0.6	-	-	-
	0.8	-	-	-
	1.0	-	-	-
	1.2	-	-	-
	1.4	-	-	-
	1.6	-	-	-
	1.8	-	-	-
	2.0	-	-	-
T2	0.2	3527	774	1.34
	0.4	3332	814	1.40
	0.6	3180	853	1.47
	0.8	3061	891	1.54
	1.0	2889	927	1.60
	1.2	2735	969	1.67
	1.4	2563	1008	1.74
	1.6	2392	1050	1.81
	1.8	2237	1086	1.87
	2.0	2077	1119	1.93
T3	0.2	3144	708	1.01
	0.4	2961	753	1.08
	0.6	2802	799	1.14
	0.8	2651	841	1.20
	1.0	2493	880	1.26
	1.2	2307	930	1.33
	1.4	-	-	-
	1.6	-	-	-
	1.8	-	-	-
	2.0	-	-	-
T4	0.2	-	-	-
	0.4	-	-	-
	0.6	-	-	-
	0.8	-	-	-
	1.0	3620	1023	2.37
	1.2	3514	1048	2.43
	1.4	3412	1078	2.50
	1.6	3263	1117	2.59
	1.8	3081	1148	2.66
	2.0	2915	1184	2.75
T5	0.2	-	-	-
	0.4	-	-	-
	0.6	-	-	-
	0.8	-	-	-
	1.0	-	-	-
	1.2	3728	1071	2.68
	1.4	3656	1100	2.75
	1.6	3519	1137	2.84
	1.8	3325	1166	2.91
	2.0	3161	1203	3.01

Horizontal Flow				
Speed Tap	ESP	CFM	RPM	BHP
T1	0.2	2029	488	0.34
	0.4	-	-	-
	0.6	-	-	-
	0.8	-	-	-
	1.0	-	-	-
	1.2	-	-	-
	1.4	-	-	-
	1.6	-	-	-
	1.8	-	-	-
	2.0	-	-	-
T2	0.2	3642	714	1.23
	0.4	3544	743	1.28
	0.6	3415	786	1.36
	0.8	3278	827	1.43
	1.0	3147	870	1.50
	1.2	2998	915	1.58
	1.4	2852	971	1.68
	1.6	2666	1010	1.74
	1.8	2482	1060	1.83
	2.0	2323	1096	1.89
T3	0.2	3289	649	0.93
	0.4	3133	690	0.99
	0.6	2972	745	1.06
	0.8	2802	792	1.13
	1.0	2632	836	1.19
	1.2	2436	889	1.27
	1.4	-	-	-
	1.6	-	-	-
	1.8	-	-	-
	2.0	-	-	-
T4	0.2	-	-	-
	0.4	-	-	-
	0.6	-	-	-
	0.8	-	-	-
	1.0	-	-	-
	1.2	-	-	-
	1.4	3718	1010	2.34
	1.6	3610	1040	2.41
	1.8	3473	1094	2.54
	2.0	3351	1130	2.62
T5	0.2	-	-	-
	0.4	-	-	-
	0.6	-	-	-
	0.8	-	-	-
	1.0	-	-	-
	1.2	-	-	-
	1.4	-	-	-
	1.6	3825	1049	2.62
	1.8	3707	1104	2.76
	2.0	3599	1140	2.85

Down Flow				
Speed Tap	ESP	CFM	RPM	BHP
T6	0.2	2457	612	0.61
	0.4	2277	665	0.66
	0.6	2072	720	0.72
	0.8	1891	769	0.77
	1.0	1881	810	0.81
	1.2	1636	872	0.87
	1.4	1447	921	0.92
	1.6	-	-	-
	1.8	-	-	-
	2.0	-	-	-
T7	0.2	-	-	-
	0.4	2838	735	0.99
	0.6	2672	783	1.05
	0.8	2514	827	1.11
	1.0	2374	866	1.16
	1.2	2177	918	1.23
	1.4	1986	962	1.29
	1.6	1815	1006	1.35
	1.8	1667	1046	1.40
	2.0	1522	1077	1.44
T8	0.2	3482	766	1.29
	0.4	3289	806	1.36
	0.6	3137	846	1.43
	0.8	3014	884	1.49
	1.0	2840	921	1.55
	1.2	2682	964	1.63
	1.4	2507	1003	1.69
	1.6	2335	1045	1.76
	1.8	2182	1082	1.83
	2.0	2022	1115	1.88
T9	0.2	-	-	-
	0.4	3783	918	2.06
	0.6	3598	946	2.12
	0.8	3556	976	2.19
	1.0	3525	1010	2.26
	1.2	3415	1037	2.32
	1.4	3300	1069	2.39
	1.6	3146	1108	2.48
	1.8	2969	1139	2.55
	2.0	2802	1175	2.63
T10	0.2	-	-	-
	0.4	-	-	-
	0.6	-	-	-
	0.8	-	-	-
	1.0	-	-	-
	1.2	3653	1072	2.68
	1.4	3550	1101	2.75
	1.6	3452	1131	2.83
	1.8	3353	1163	2.91
	2.0	3247	1196	2.99

Horizontal Flow				
Speed Tap	ESP	CFM	RPM	BHP
T6	0.2	2616	554	0.55
	0.4	2418	613	0.61
	0.6	2188	686	0.68
	0.8	1997	741	0.74
	1.0	1729	785	0.78
	1.2	1439	852	0.85
	1.4	-	-	-
	1.6	-	-	-
	1.8	-	-	-
	2.0	-	-	-
T7	0.2	-	-	-
	0.4	-	-	-
	0.6	2828	733	0.98
	0.8	2651	782	1.05
	1.0	2466	825	1.11
	1.2	2253	882	1.18
	1.4	2038	946	1.27
	1.6	1869	991	1.33
	1.8	1668	1038	1.39
	2.0	1495	1074	1.44
T8	0.2	3601	706	1.19
	0.4	3495	736	1.24
	0.6	3363	780	1.32
	0.8	3221	822	1.39
	1.0	3086	866	1.46
	1.2	2932	912	1.54
	1.4	2780	969	1.63
	1.6	2594	1008	1.70
	1.8	2408	1058	1.78
	2.0	2247	1094	1.85
T9	0.2	-	-	-
	0.4	-	-	-
	0.6	-	-	-
	0.8	-	-	-
	1.0	3833	930	2.08
	1.2	3735	960	2.15
	1.4	3629	1005	2.25
	1.6	3503	1036	2.32
	1.8	3358	1089	2.44
	2.0	3229	1125	2.52
T10	0.2	-	-	-
	0.4	-	-	-
	0.6	-	-	-
	0.8	-	-	-
	1.0	3659	998	2.50
	1.2	3638	1008	2.52
	1.4	3585	1022	2.56
	1.6	3500	1052	2.63
	1.8	3382	1091	2.73
	2.0	3286	1124	2.81

Note:

- Taps T1 and T2 are for first stage of cooling only. Taps T6 and T7 are for first stage of heating only. Refer to page 11 for speed tap selection.
- Shaded area are not recommended for cooling or heating operation.
- Airflow table includes resistance for base unit only with 2" clean air filters in place.
  Any Additional air resistance caused by factory or field installed options or accessories must be added to the ESP in order to select the correct speed tap.

APPENDIX A BLOWER PERFORMANCE TABLES

7.5 Ton
180 MBH Gas Heat Exchanger
Standard Static Direct Drive
Models: DRG0903DM, DRG0904DM, DRG0907DM

Down Flow					Horizontal Flow				
Speed Tap	ESP	CFM	RPM	BHP	Speed Tap	ESP	CFM	RPM	BHP
T1	0.2	1954	552	0.40	T1	0.2	2030	500	0.36
	0.4	-	-	-		0.4	-	-	-
	0.6	-	-	-		0.6	-	-	-
	0.8	-	-	-		0.8	-	-	-
T2	0.2	2589	629	0.67	T2	0.2	2675	594	0.64
	0.4	2410	681	0.73		0.4	2487	642	0.69
	0.6	2216	734	0.79		0.6	2336	698	0.75
	0.8	2038	782	0.84		0.8	2089	777	0.83
T3	0.2	3017	730	1.06	T3	0.2	3161	679	0.99
	0.4	2897	773	1.13		0.4	3068	713	1.04
	0.6	2760	818	1.19		0.6	2899	768	1.12
	0.8	2633	859	1.25		0.8	2776	809	1.18
T4	0.2	3251	774	1.26	T4	0.2	3413	704	1.15
	0.4	3095	813	1.33		0.4	3244	742	1.21
	0.6	2954	853	1.39		0.6	3108	785	1.28
	0.8	2827	893	1.46		0.8	2963	823	1.34
T5	0.2	3417	815	1.47	T5	0.2	3563	693	1.25
	0.4	3274	846	1.53		0.4	3526	771	1.39
	0.6	3126	887	1.60		0.6	3402	814	1.47
	0.8	2988	923	1.66		0.8	3317	858	1.55
T6	0.2	1416	213	0.21	T6	0.2	1604	448	0.25
	0.4	-	-	-		0.4	-	-	-
	0.6	-	-	-		0.6	-	-	-
	0.8	-	-	-		0.8	-	-	-
T7	0.2	1975	554	0.41	T7	0.2	2056	505	0.37
	0.4	-	-	-		0.4	1832	582	0.43
	0.6	-	-	-		0.6	-	-	-
	0.8	-	-	-		0.8	-	-	-
T8	0.2	2156	579	0.54	T8	0.2	2434	558	0.52
	0.4	1956	637	0.59		0.4	2251	616	0.57
	0.6	-	-	-		0.6	-	-	-
	0.8	-	-	-		0.8	-	-	-
T9	0.2	2936	677	0.87	T9	0.2	2975	642	0.83
	0.4	2756	724	0.93		0.4	2799	680	0.88
	0.6	2586	773	0.99		0.6	2585	734	0.94
	0.8	-	-	-		0.8	-	-	-
T10	0.2	3427	756	1.24	T10	0.2	3413	704	1.15
	0.4	3236	797	1.31		0.4	3244	742	1.21
	0.6	3084	838	1.38		0.6	3108	785	1.28
	0.8	2955	877	1.44		0.8	2963	823	1.34

7.5 Ton
180 MBH Gas Heat Exchanger
Medium Static Direct Drive
Models: DRG0903LM, DRG0904LM, DRG0907LM

Down Flow					Horizontal Flow				
Speed Tap	ESP	CFM	RPM	BHP	Speed Tap	ESP	CFM	RPM	BHP
T1	0.2	1954	552	0.40	T1	0.2	2030	500	0.36
	0.4	-	-	-		0.4	-	-	-
	0.6	-	-	-		0.6	-	-	-
	0.8	-	-	-		0.8	-	-	-
	1.0	-	-	-		1.0	-	-	-
	1.2	-	-	-		1.2	-	-	-
	1.4	-	-	-		1.4	-	-	-
T2	0.2	2908	718	0.98	T2	0.2	3067	653	0.89
	0.4	2754	759	1.04		0.4	2922	693	0.95
	0.6	2608	806	1.10		0.6	2711	750	1.03
	0.8	2473	845	1.16		0.8	2551	794	1.09
	1.0	2322	892	1.22		1.0	2396	837	1.15
	1.2	2105	945	1.29		1.2	2121	908	1.24
	1.4	1941	996	1.36		1.4	1872	971	1.33
T3	0.2	3017	730	1.06	T3	0.2	3161	679	0.99
	0.4	2897	773	1.13		0.4	3068	713	1.04
	0.6	2760	818	1.19		0.6	2899	768	1.12
	0.8	2633	859	1.25		0.8	2776	809	1.18
	1.0	2499	900	1.31		1.0	2647	851	1.24
	1.2	2280	957	1.40		1.2	2405	922	1.35
	1.4	-	-	-		1.4	-	-	-
T4	0.2	3629	851	1.72	T4	0.2	-	-	-
	0.4	3548	882	1.79		0.4	3730	803	1.62
	0.6	3484	917	1.86		0.6	3644	845	1.71
	0.8	3375	955	1.93		0.8	3566	881	1.78
	1.0	3293	989	2.00		1.0	3473	921	1.86
	1.2	3185	1020	2.06		1.2	3374	946	1.91
	1.4	3102	1056	2.14		1.4	3289	996	2.02
T5	0.2	3765	876	1.89	T5	0.2	-	-	-
	0.4	3676	902	1.94		0.4	-	-	-
	0.6	3614	937	2.02		0.6	3776	862	1.86
	0.8	3386	980	2.11		0.8	3699	898	1.94
	1.0	3274	1020	2.19		1.0	3616	938	2.02
	1.2	3153	1049	2.25		1.2	3502	964	2.08
	1.4	3035	1078	2.32		1.4	3440	1011	2.18
T6	0.2	2730	647	0.75	T6	0.2	2782	575	0.63
	0.4	2551	698	0.81		0.4	2589	631	0.69
	0.6	2367	749	0.87		0.6	2376	699	0.76
	0.8	2195	796	0.92		0.8	2187	753	0.82
	1.0	2113	836	0.97		1.0	1946	796	0.87
	1.2	1891	894	1.03		1.2	-	-	-
	1.4	-	-	-		1.4	-	-	-
T7	0.2	3108	758	1.17	T7	0.2	3284	678	1.05
	0.4	3019	797	1.23		0.4	3187	726	1.12
	0.6	2932	835	1.29		0.6	3081	772	1.19
	0.8	2818	876	1.36		0.8	2988	814	1.26
	1.0	2696	916	1.42		1.0	2876	857	1.32
	1.2	2538	949	1.47		1.2	2770	907	1.40
	1.4	2378	995	1.54		1.4	2660	936	1.45
T8	0.2	3541	835	1.62	T8	0.2	3730	746	1.44
	0.4	3458	868	1.68		0.4	3640	790	1.53
	0.6	3391	903	1.75		0.6	3549	833	1.61
	0.8	3282	941	1.82		0.8	3470	869	1.68
	1.0	3195	976	1.89		1.0	3372	909	1.76
	1.2	3078	1007	1.95		1.2	3288	935	1.81
	1.4	2985	1044	2.02		1.4	3183	986	1.91
T9	0.2	3712	865	1.83	T9	0.2	3902	774	1.63
	0.4	3634	896	1.89		0.4	3813	815	1.72
	0.6	3571	930	1.96		0.6	3732	857	1.81
	0.8	3463	968	2.04		0.8	3655	893	1.88
	1.0	3384	1002	2.12		1.0	3569	932	1.97
	1.2	3284	1033	2.18		1.2	3458	958	2.02
	1.4	3210	1067	2.25		1.4	3391	1006	2.12
T10	0.2	3869	893	2.04	T10	0.2	4056	799	1.83
	0.4	3795	921	2.11		0.4	3968	839	1.92
	0.6	3736	956	2.18		0.6	3899	879	2.01
	0.8	3628	994	2.27		0.8	3821	915	2.09
	1.0	3552	1029	2.35		1.0	3751	955	2.18
	1.2	3468	1058	2.42		1.2	3643	984	2.25
	1.4	3405	1089	2.49		1.4	3582	1025	2.34

Note:

- Taps T1 and T2 are for first stage of cooling only. Taps T6 and T7 are for first stage of heating only. Refer to page 11 for speed tap selection.
- Shaded area are not recommended for cooling or heating operation.
- Airflow table includes resistance for base unit only with 2" clean air filters in place.
  Any Additional air resistance caused by factory or field installed options or accessories must be added to the ESP in order to select the correct speed tap.

APPENDIX A BLOWER PERFORMANCE TABLES

7.5 Ton
180 MBH Gas Heat Exchanger
High Static Direct Drive
Models: DRG0903WM, DRG0904WM, DRG0907WM

Down Flow				
Speed Tap	ESP	CFM	RPM	BHP
T1	0.2	1954	552	0.40
	0.4	-	-	-
	0.6	-	-	-
	0.8	-	-	-
	1.0	-	-	-
	1.2	-	-	-
	1.4	-	-	-
	1.6	-	-	-
	1.8	-	-	-
	2.0	-	-	-
T2	0.2	3316	796	1.37
	0.4	3230	831	1.43
	0.6	3153	868	1.50
	0.8	3042	907	1.57
	1.0	2939	943	1.63
	1.2	2800	976	1.68
	1.4	2676	1017	1.76
	1.6	2500	1044	1.80
	1.8	2336	1113	1.92
	2.0	2209	1162	2.01
T3	0.2	3017	730	1.06
	0.4	2897	773	1.13
	0.6	2760	818	1.19
	0.8	2633	859	1.25
	1.0	2499	900	1.31
	1.2	2280	957	1.40
	1.4	-	-	-
	1.6	-	-	-
	1.8	-	-	-
	2.0	-	-	-
T4	0.2	-	-	-
	0.4	-	-	-
	0.6	3767	961	2.23
	0.8	3660	1000	2.32
	1.0	3496	1042	2.42
	1.2	3398	1073	2.49
	1.4	3293	1099	2.55
	1.6	3065	1137	2.64
	1.8	2958	1163	2.70
	2.0	2810	1208	2.80
T5	0.2	-	-	-
	0.4	-	-	-
	0.6	-	-	-
	0.8	-	-	-
	1.0	3728	1062	2.66
	1.2	3662	1090	2.73
	1.4	3602	1116	2.79
	1.6	3523	1145	2.86
	1.8	3416	1188	2.97
	2.0	3317	1217	3.04

Horizontal Flow				
Speed Tap	ESP	CFM	RPM	BHP
T1	0.2	2030	500	0.36
	0.4	-	-	-
	0.6	-	-	-
	0.8	-	-	-
	1.0	-	-	-
	1.2	-	-	-
	1.4	-	-	-
	1.6	-	-	-
	1.8	-	-	-
	2.0	-	-	-
T2	0.2	3316	796	1.23
	0.4	3544	743	1.28
	0.6	3415	786	1.36
	0.8	3278	827	1.43
	1.0	3147	870	1.50
	1.2	2998	915	1.58
	1.4	2852	971	1.68
	1.6	2666	1010	1.74
	1.8	2482	1060	1.83
	2.0	2323	1096	1.89
T3	0.2	3161	679	0.99
	0.4	3068	713	1.04
	0.6	2899	768	1.12
	0.8	2776	809	1.18
	1.0	2647	851	1.24
	1.2	2405	922	1.35
	1.4	-	-	-
	1.6	-	-	-
	1.8	-	-	-
	2.0	-	-	-
T4	0.2	-	-	-
	0.4	-	-	-
	0.6	-	-	-
	0.8	-	-	-
	1.0	3786	959	2.23
	1.2	3674	995	2.31
	1.4	3566	1035	2.40
	1.6	3459	1067	2.48
	1.8	3361	1097	2.55
	2.0	3261	1134	2.63
T5	0.2	-	-	-
	0.4	-	-	-
	0.6	-	-	-
	0.8	-	-	-
	1.0			-
	1.2			-
	1.4	3795	1047	2.62
	1.6	3706	1077	2.69
	1.8	3641	1114	2.79
	2.0	3565	1145	2.86

Down Flow				
Speed Tap	ESP	CFM	RPM	BHP
T6	0.2	2792	701	0.91
	0.4	2699	745	0.97
	0.6	2597	786	1.02
	0.8	2478	831	1.08
	1.0	2319	878	1.14
	1.2	2112	912	1.18
	1.4	1921	957	1.24
	1.6	-	-	-
	1.8	-	-	-
	2.0	-	-	-
T7	0.2	3464	822	1.53
	0.4	3380	855	1.59
	0.6	3309	891	1.66
	0.8	3200	929	1.73
	1.0	3108	964	1.80
	1.2	2984	996	1.85
	1.4	2881	1035	1.93
	1.6	2717	1062	1.98
	1.8	2550	1130	2.10
	2.0	2357	1171	2.18
T8	0.2	3983	912	2.21
	0.4	3912	940	2.28
	0.6	3855	974	2.36
	0.8	3748	1014	2.46
	1.0	3671	1051	2.55
	1.2	3598	1079	2.62
	1.4	3538	1107	2.68
	1.6	3446	1136	2.75
	1.8	3326	1183	2.87
	2.0	3210	1213	2.94
T9	0.2	4119	935	2.44
	0.4	4054	962	2.51
	0.6	3998	997	2.60
	0.8	3890	1039	2.71
	1.0	3806	1079	2.82
	1.2	3747	1106	2.89
	1.4	3686	1130	2.95
	1.6	3625	1160	3.03
	1.8	3541	1195	3.12
	2.0	3456	1222	3.19
T10	0.2	-	-	-
	0.4	-	-	-
	0.6	-	-	-
	0.8	-	-	-
	1.0	4156	1104	3.08
	1.2	4032	1128	3.14
	1.4	3908	1151	3.21
	1.6	3784	1175	3.27
	1.8	3660	1198	3.34
	2.0	3536	1222	3.40

Horizontal Flow				
Speed Tap	ESP	CFM	RPM	BHP
T6	0.2	2957	628	0.82
	0.4	2854	681	0.89
	0.6	2743	730	0.95
	0.8	2634	776	1.01
	1.0	2523	823	1.07
	1.2	2193	915	1.19
	1.4	1969	950	1.23
	1.6	-	-	-
	1.8	-	-	-
	2.0	-	-	-
T7	0.2	3652	734	1.37
	0.4	3562	778	1.45
	0.6	3467	822	1.53
	0.8	3386	859	1.60
	1.0	3284	899	1.67
	1.2	3212	927	1.73
	1.4	3090	977	1.82
	1.6	2966	1013	1.89
	1.8	2649	1112	2.07
	2.0	2521	1147	2.14
T8	0.2	4167	817	1.98
	0.4	4077	857	2.08
	0.6	4019	895	2.17
	0.8	3939	931	2.26
	1.0	3885	973	2.36
	1.2	3827	1008	2.44
	1.4	3723	1040	2.52
	1.6	3622	1070	2.59
	1.8	3569	1108	2.69
	2.0	3472	1139	2.76
T9	0.2	4296	839	2.19
	0.4	4205	878	2.29
	0.6	4163	915	2.39
	0.8	4077	952	2.49
	1.0	4047	996	2.60
	1.2	3954	1041	2.72
	1.4	3894	1058	2.76
	1.6	3827	1088	2.84
	1.8	3735	1123	2.93
	2.0	3680	1154	3.01
T10	0.2	-	-	-
	0.4	-	-	-
	0.6	-	-	-
	0.8	-	-	-
	1.0	-	-	-
	1.2	-	-	-
	1.4	4040	1074	2.99
	1.6	4023	1106	3.08
	1.8	3859	1138	3.17
	2.0	3812	1167	3.25

Note:

- Taps T1 and T2 are for first stage of cooling only. Taps T6 and T7 are for first stage of heating only. Refer to page 11 for speed tap selection.
- Shaded area are not recommended for cooling or heating operation.
- Airflow table includes resistance for base unit only with 2" clean air filters in place.
  Any Additional air resistance caused by factory or field installed options or accessories must be added to the ESP in order to select the correct speed tap.

APPENDIX A BLOWER PERFORMANCE TABLES

7.5 Ton
225 MBH Gas Heat Exchanger
Standard Static Direct Drive
Models: DRG0903DH, DRG0904DH, DRG0907DH

Down Flow					Horizontal Flow				
Speed Tap	ESP	CFM	RPM	BHP	Speed Tap	ESP	CFM	RPM	BHP
T1	0.2	1954	552	0.40	T1	0.2	2102	495	0.36
	0.4	-	-	-		0.4	1906	566	0.41
	0.6	-	-	-		0.6	-	-	-
	0.8	-	-	-		0.8	-	-	-
T2	0.2	2589	629	0.67	T2	0.2	2748	571	0.61
	0.4	2410	681	0.73		0.4	2554	627	0.67
	0.6	2216	734	0.79		0.6	2337	697	0.75
	0.8	2038	782	0.84		0.8	2148	750	0.80
T3	0.2	3194	716	1.05	T3	0.2	3336	657	0.96
	0.4	3010	760	1.11		0.4	3185	696	1.02
	0.6	2852	805	1.18		0.6	3029	750	1.10
	0.8	2705	847	1.24		0.8	2862	796	1.17
T4	0.2	3413	753	1.23	T4	0.2	3539	693	1.13
	0.4	3222	794	1.29		0.4	3419	726	1.18
	0.6	3070	836	1.36		0.6	3282	773	1.26
	0.8	2940	875	1.43		0.8	3132	816	1.33
T5	0.2	3622	793	1.43	T5	0.2	3724	732	1.32
	0.4	3422	830	1.50		0.4	3647	757	1.37
	0.6	3268	868	1.57		0.6	3525	797	1.44
	0.8	3160	904	1.64		0.8	3401	836	1.51
T6	0.2	2098	568	0.45	T6	0.2	2251	512	0.41
	0.4	1913	626	0.50		0.4	2052	579	0.46
	0.6	-	-	-		0.6	-	-	-
	0.8	-	-	-		0.8	-	-	-
T7	0.2	2625	633	0.69	T7	0.2	2784	576	0.63
	0.4	2446	685	0.75		0.4	2591	631	0.69
	0.6	2255	738	0.81		0.6	2379	699	0.76
	0.8	2079	786	0.86		0.8	2190	753	0.82
T8	0.2	3081	698	0.97	T8	0.2	3230	639	0.88
	0.4	2900	744	1.03		0.4	3066	682	0.94
	0.6	2737	791	1.09		0.6	2900	739	1.02
	0.8	2582	834	1.15		0.8	2726	787	1.09
T9	0.2	3263	728	1.10	T9	0.2	3401	668	1.01
	0.4	3078	771	1.17		0.4	3259	705	1.07
	0.6	2923	815	1.23		0.6	3109	757	1.15
	0.8	2780	856	1.30		0.8	2947	802	1.22
T10	0.2	3427	756	1.24	T10	0.2	3552	696	1.14
	0.4	3236	797	1.31		0.4	3435	728	1.20
	0.6	3084	838	1.38		0.6	3299	774	1.27
	0.8	2955	877	1.44		0.8	3151	817	1.34

7.5 Ton
225 MBH Gas Heat Exchanger
Medium Static Direct Drive
Models: DRG0903LH, DRG0904LH, DRG0907LH

Down Flow					Horizontal Flow				
Speed Tap	ESP	CFM	RPM	BHP	Speed Tap	ESP	CFM	RPM	BHP
T1	0.2	1954	552	0.40	T1	0.2	2102	495	0.36
	0.4	-	-	-		0.4	1906	566	0.41
	0.6	-	-	-		0.6	-	-	-
	0.8	-	-	-		0.8	-	-	-
	1.0	-	-	-		1.0	-	-	-
	1.2	-	-	-		1.2	-	-	-
	1.4	-	-	-		1.4	-	-	-
T2	0.2	3059	695	0.95	T2	0.2	3208	636	0.87
	0.4	2877	741	1.01		0.4	3043	680	0.93
	0.6	2714	788	1.08		0.6	2874	737	1.01
	0.8	2558	831	1.14		0.8	2699	785	1.07
	1.0	2412	870	1.19		1.0	2519	829	1.13
	1.2	2218	922	1.26		1.2	2312	884	1.21
	1.4	2028	965	1.32		1.4	2103	948	1.30
T3	0.2	3194	716	1.05	T3	0.2	3336	657	0.96
	0.4	3010	760	1.11		0.4	3185	696	1.02
	0.6	2852	805	1.18		0.6	3029	750	1.10
	0.8	2705	847	1.24		0.8	2862	796	1.17
	1.0	2542	885	1.30		1.0	2699	840	1.23
	1.2	2360	934	1.37		1.2	2509	893	1.31
	1.4	-	-	-		1.4	2320	954	1.40
T4	0.2	-	-	-	T4	0.2	-	-	-
	0.4	3622	874	1.77		0.4	-	-	-
	0.6	3458	907	1.83		0.6	-	-	-
	0.8	3380	940	1.90		0.8	3693	861	1.74
	1.0	3265	975	1.97		1.0	3575	905	1.83
	1.2	3138	1008	2.04		1.2	3461	941	1.90
	1.4	2994	1043	2.11		1.4	3345	991	2.00
T5	0.2	-	-	-	T5	0.2	-	-	-
	0.4	3725	901	1.94		0.4	-	-	-
	0.6	3549	931	2.00		0.6	-	-	-
	0.8	3492	961	2.07		0.8	-	-	-
	1.0	3423	996	2.15		1.0	3737	920	1.98
	1.2	3307	1026	2.21		1.2	3633	952	2.05
	1.4	3180	1059	2.28		1.4	3524	999	2.15
T6	0.2	2231	516	0.50	T6	0.2	2410	585	0.57
	0.4	2028	649	0.63		0.4	2385	610	0.59
	0.6	1835	696	0.68		0.6	2243	664	0.65
	0.8	-	-	-		0.8	1983	748	0.73
	1.0	-	-	-		1.0	-	-	-
	1.2	-	-	-		1.2	-	-	-
	1.4	-	-	-		1.4	-	-	-
T7	0.2	2987	684	0.90	T7	0.2	3139	625	0.83
	0.4	2806	731	0.96		0.4	2967	671	0.89
	0.6	2639	779	1.03		0.6	2791	730	0.96
	0.8	2479	823	1.09		0.8	2613	779	1.03
	1.0	2344	862	1.14		1.0	2424	823	1.09
	1.2	2144	915	1.21		1.2	2207	880	1.16
	1.4	1953	959	1.27		1.4	1987	944	1.25
T8	0.2	3456	761	1.27	T8	0.2	3578	701	1.17
	0.4	3264	801	1.34		0.4	3467	732	1.22
	0.6	3112	842	1.40		0.6	3333	778	1.30
	0.8	2986	881	1.47		0.8	3188	820	1.37
	1.0	2812	918	1.53		1.0	3051	863	1.44
	1.2	2652	961	1.60		1.2	2894	910	1.52
	1.4	2476	1001	1.67		1.4	2739	967	1.61
T9	0.2	3569	838	1.66	T9	0.2	3868	769	1.52
	0.4	3500	874	1.73		0.4	3839	787	1.55
	0.6	3434	910	1.80		0.6	3727	820	1.62
	0.8	3325	947	1.87		0.8	3631	856	1.69
	1.0	3240	982	1.94		1.0	3513	900	1.78
	1.2	3128	1013	2.00		1.2	3394	937	1.85
	1.4	3040	1049	2.07		1.4	3274	987	1.95
T10	0.2	3893	882	1.99	T10	0.2	4122	792	1.79
	0.4	3766	916	2.07		0.4	4001	828	1.87
	0.6	3687	945	2.14		0.6	3881	865	1.96
	0.8	3584	977	2.21		0.8	3800	910	2.06
	1.0	3501	1006	2.28		1.0	3594	930	2.10
	1.2	3392	1042	2.36		1.2	3519	974	2.20
	1.4	3289	1068	2.42		1.4	3391	1007	2.28

Note:

- Taps T1 and T2 are for first stage of cooling only. Taps T6 and T7 are for first stage of heating only. Refer to page 11 for speed tap selection.
- Shaded area are not recommended for cooling or heating operation.
- Airflow table includes resistance for base unit only with 2" clean air filters in place.
  Any Additional air resistance caused by factory or field installed options or accessories must be added to the ESP in order to select the correct speed tap.

APPENDIX A BLOWER PERFORMANCE TABLES

7.5 Ton
225 MBH Gas Heat Exchanger
High Static Direct Drive
Models: DRG0903WH, DRG0904WH, DRG0907WH

Down Flow				
Speed Tap	ESP	CFM	RPM	BHP
T1	0.2	1954	552	0.40
	0.4	-	-	-
	0.6	-	-	-
	0.8	-	-	-
	1.0	-	-	-
	1.2	-	-	-
	1.4	-	-	-
	1.6	-	-	-
	1.8	-	-	-
	2.0	-	-	-
T2	0.2	3527	774	1.34
	0.4	3332	814	1.40
	0.6	3180	853	1.47
	0.8	3061	891	1.54
	1.0	2889	927	1.60
	1.2	2735	969	1.67
	1.4	2563	1008	1.74
	1.6	2392	1050	1.81
	1.8	2237	1086	1.87
	2.0	2077	1119	1.93
T3	0.2	3194	716	1.05
	0.4	3010	760	1.11
	0.6	2852	805	1.18
	0.8	2705	847	1.24
	1.0	2542	885	1.30
	1.2	2360	934	1.37
	1.4	-	-	-
	1.6	-	-	-
	1.8	-	-	-
	2.0	-	-	-
T4	0.2	-	-	-
	0.4	-	-	-
	0.6	3769	961	2.22
	0.8	3645	1000	2.32
	1.0	3496	1042	2.42
	1.2	3398	1073	2.49
	1.4	3293	1099	2.55
	1.6	3065	1137	2.64
	1.8	2958	1163	2.70
	2.0	2810	1208	2.80
T5	0.2	-	-	-
	0.4	-	-	-
	0.6	-	-	-
	0.8	-	-	-
	1.0	3754	1063	2.66
	1.2	3662	1090	2.73
	1.4	3578	1115	2.80
	1.6	3519	1137	2.84
	1.8	3325	1166	2.91
	2.0	3161	1203	3.01

Horizontal Flow				
Speed Tap	ESP	CFM	RPM	BHP
T1	0.2	2102	495	0.36
	0.4	1906	566	0.41
	0.6	-	-	-
	0.8	-	-	-
	1.0	-	-	-
	1.2	-	-	-
	1.4	-	-	-
	1.6	-	-	-
	1.8	-	-	-
	2.0	-	-	-
T2	0.2	3642	714	1.23
	0.4	3544	743	1.28
	0.6	3415	786	1.36
	0.8	3278	827	1.43
	1.0	3147	870	1.50
	1.2	2998	915	1.58
	1.4	2852	971	1.68
	1.6	2666	1010	1.74
	1.8	2482	1060	1.83
	2.0	2323	1096	1.89
T3	0.2	3336	657	0.96
	0.4	3185	696	1.02
	0.6	3029	750	1.10
	0.8	2862	796	1.17
	1.0	2699	840	1.23
	1.2	2509	893	1.31
	1.4	2320	954	1.40
	1.6	-	-	-
	1.8	-	-	-
	2.0	-	-	-
T4	0.2	-	-	-
	0.4	-	-	-
	0.6	-	-	-
	0.8	-	-	-
	1.0	-	-	-
	1.2	3674	995	2.31
	1.4	3566	1035	2.40
	1.6	3459	1067	2.48
	1.8	3361	1097	2.55
	2.0	3261	1134	2.63
T5	0.2	-	-	-
	0.4	-	-	-
	0.6	-	-	-
	0.8	-	-	-
	1.0	-	-	-
	1.2	-	-	-
	1.4	3795	1047	2.62
	1.6	3706	1077	2.69
	1.8	3641	1114	2.79
	2.0	3565	1145	2.86

Down Flow				
Speed Tap	ESP	CFM	RPM	BHP
T6	0.2	2569	626	0.66
	0.4	2389	678	0.72
	0.6	2194	732	0.78
	0.8	2015	780	0.83
	1.0	1974	821	0.87
	1.2	-	-	-
	1.4	-	-	-
	1.6	-	-	-
	1.8	-	-	-
	2.0	-	-	-
T7	0.2	-	-	-
	0.4	3048	766	1.14
	0.6	2892	811	1.21
	0.8	2747	852	1.27
	1.0	2581	890	1.33
	1.2	2402	938	1.40
	1.4	2216	980	1.46
	1.6	2043	1023	1.53
	1.8	1893	1062	1.58
	2.0	-	-	-
T8	0.2	3744	819	1.58
	0.4	3536	854	1.64
	0.6	3378	889	1.71
	0.8	3286	924	1.78
	1.0	3144	960	1.85
	1.2	3009	995	1.92
	1.4	2855	1031	1.99
	1.6	2687	1072	2.06
	1.8	2526	1107	2.13
	2.0	-	-	-
T9	0.2	3998	907	2.14
	0.4	3905	939	2.22
	0.6	3812	972	2.29
	0.8	3693	1005	2.37
	1.0	3617	1041	2.46
	1.2	3539	1069	2.52
	1.4	3478	1098	2.59
	1.6	3376	1127	2.66
	1.8	3271	1162	2.74
	2.0	3111	1208	2.85
T10	0.2	-	-	-
	0.4	-	-	-
	0.6	-	-	-
	0.8	-	-	-
	1.0	4156	1104	3.08
	1.2	4032	1128	3.14
	1.4	3908	1151	3.21
	1.6	3784	1175	3.27
	1.8	3660	1198	3.34
	2.0	3536	1222	3.40

Horizontal Flow				
Speed Tap	ESP	CFM	RPM	BHP
T6	0.2	2728	568	0.60
	0.4	2533	625	0.66
	0.6	2314	695	0.74
	0.8	2125	749	0.79
	1.0	1875	792	0.84
	1.2	-	-	-
	1.4	-	-	-
	1.6	-	-	-
	1.8	-	-	-
	2.0	-	-	-
T7	0.2	-	-	-
	0.4	-	-	-
	0.6	3074	754	1.13
	0.8	2910	800	1.19
	1.0	2751	843	1.26
	1.2	2566	895	1.34
	1.4	2382	956	1.43
	1.6	2200	998	1.49
	1.8	2005	1047	1.56
	2.0	1836	1083	1.62
T8	0.2	3828	758	1.46
	0.4	3784	778	1.50
	0.6	3669	813	1.57
	0.8	3564	850	1.64
	1.0	3444	894	1.72
	1.2	3320	933	1.80
	1.4	3197	984	1.89
	1.6	3023	1020	1.96
	1.8	2852	1071	2.06
	2.0	2703	1107	2.13
T9	0.2	-	-	-
	0.4	-	-	-
	0.6	4100	872	2.06
	0.8	4086	901	2.12
	1.0	3955	944	2.23
	1.2	3864	970	2.29
	1.4	3758	1013	2.39
	1.6	3659	1042	2.46
	1.8	3525	1096	2.59
	2.0	3406	1132	2.67
T10	0.2	-	-	-
	0.4	-	-	-
	0.6	-	-	-
	0.8	-	-	-
	1.0	-	-	-
	1.2	-	-	-
	1.4	4040	1074	2.99
	1.6	4023	1106	3.08
	1.8	3859	1138	3.17
	2.0	3812	1167	3.25

Note:

- Taps T1 and T2 are for first stage of cooling only. Taps T6 and T7 are for first stage of heating only. Refer to page 11 for speed tap selection.
- Shaded area are not recommended for cooling or heating operation.
- Airflow table includes resistance for base unit only with 2" clean air filters in place.
  Any Additional air resistance caused by factory or field installed options or accessories must be added to the ESP in order to select the correct speed tap.

APPENDIX A BLOWER PERFORMANCE TABLES

8.5 Ton
130 MBH Gas Heat Exchanger
Standard Static Direct Drive
Models: DRG1023DL, DRG1024DL, DRG1027DL

Down Flow					Horizontal Flow				
Speed Tap	ESP	CFM	RPM	BHP	Speed Tap	ESP	CFM	RPM	BHP
T1	0.2	1714	496	0.32	T1	0.2	1856	423	0.27
	0.4	-	-	-		0.4	-	-	-
	0.6	-	-	-		0.6	-	-	-
	0.8	-	-	-		0.8	-	-	-
T2	0.2	2365	599	0.61	T2	0.2	2671	503	0.51
	0.4	2208	649	0.66		0.4	2492	568	0.57
	0.6	2048	695	0.70		0.6	2335	628	0.64
	0.8	-	-	-		0.8	2027	690	0.70
T3	0.2	2798	671	0.88	T3	0.2	3144	564	0.74
	0.4	2687	713	0.93		0.4	3005	607	0.79
	0.6	-	-	-		0.6	2824	671	0.88
	0.8	-	-	-		0.8	2661	722	0.95
T4	0.2	3522	795	1.51	T4	0.2	3921	655	1.25
	0.4	3389	828	1.58		0.4	3775	700	1.33
	0.6	3240	865	1.65		0.6	3630	745	1.42
	0.8	3083	898	1.71		0.8	3449	786	1.50
T5	0.2	3830	847	1.83	T5	0.2	4210	694	1.49
	0.4	3702	881	1.90		0.4	4071	737	1.59
	0.6	3563	915	1.97		0.6	3942	777	1.67
	0.8	3399	946	2.04		0.8	3746	819	1.76
T6	0.2	1889	528	0.38	T6	0.2	2056	443	0.32
	0.4	1827	589	0.43		0.4	1887	522	0.38
	0.6	1445	667	0.48		0.6	1702	591	0.43
	0.8	-	-	-		0.8	1327	707	0.51
T7	0.2	2193	571	0.53	T7	0.2	2445	487	0.45
	0.4	2090	635	0.59		0.4	2283	556	0.51
	0.6	1959	698	0.64		0.6	2098	617	0.57
	0.8	1704	763	0.70		0.8	1828	688	0.64
T8	0.2	2489	616	0.69	T8	0.2	2760	545	0.61
	0.4	2351	679	0.76		0.4	2630	587	0.66
	0.6	2235	729	0.82		0.6	2487	641	0.72
	0.8	2050	780	0.87		0.8	2264	701	0.79
T9	0.2	2860	679	0.94	T9	0.2	3234	581	0.80
	0.4	2699	735	1.02		0.4	3043	626	0.87
	0.6	2554	774	1.07		0.6	2866	675	0.93
	0.8	2446	817	1.13		0.8	2677	729	1.01
T10	0.2	3182	743	1.22	T10	0.2	3655	604	0.99
	0.4	3041	788	1.30		0.4	3427	663	1.09
	0.6	2953	821	1.35		0.6	3210	714	1.17
	0.8	2797	868	1.43		0.8	3066	759	1.25

8.5 Ton
130 MBH Gas Heat Exchanger
Medium Static Direct Drive
Models: DRG1023LL, DRG1024LL, DRG1027LL

Down Flow					Horizontal Flow				
Speed Tap	ESP	CFM	RPM	BHP	Speed Tap	ESP	CFM	RPM	BHP
T1	0.2	1714	496	0.32	T1	0.2	1856	423	0.27
	0.4	-	-	-		0.4	-	-	-
	0.6	-	-	-		0.6	-	-	-
	0.8	-	-	-		0.8	-	-	-
	1.0	-	-	-		1.0	-	-	-
	1.2	-	-	-		1.2	-	-	-
	1.4	-	-	-		1.4	-	-	-
T2	0.2	3114	722	1.12	T2	0.2	3458	603	0.93
	0.4	2977	761	1.18		0.4	3292	658	1.02
	0.6	2825	800	1.24		0.6	3155	700	1.08
	0.8	2634	846	1.31		0.8	3007	747	1.16
	1.0	2474	878	1.36		1.0	2844	797	1.23
	1.2	2236	931	1.44		1.2	2681	836	1.29
	1.4	1990	986	1.53		1.4	2469	885	1.37
T3	0.2	2798	671	0.88	T3	0.2	3144	564	0.74
	0.4	2687	713	0.93		0.4	3005	607	0.79
	0.6	-	-	-		0.6	2824	671	0.88
	0.8	-	-	-		0.8	2661	722	0.95
	1.0	-	-	-		1.0	-	-	-
	1.2	-	-	-		1.2	-	-	-
	1.4	-	-	-		1.4	-	-	-
T4	0.2	3997	874	1.99	T4	0.2	-	-	-
	0.4	3869	909	2.07		0.4	4200	754	1.71
	0.6	3740	942	2.14		0.6	4070	791	1.80
	0.8	3578	975	2.22		0.8	3879	838	1.91
	1.0	3417	1009	2.29		1.0	3699	874	1.99
	1.2	3257	1039	2.36		1.2	3535	923	2.10
	1.4	3091	1069	2.43		1.4	3341	946	2.15
T5	0.2	-	-	-	T5	0.2	-	-	-
	0.4	4125	958	2.46		0.4	-	-	-
	0.6	3997	992	2.55		0.6	-	-	-
	0.8	3806	1021	2.63		0.8	4194	863	2.22
	1.0	3701	1056	2.72		1.0	4012	898	2.31
	1.2	3547	1081	2.78		1.2	3879	955	2.45
	1.4	3374	1101	2.83		1.4	3683	967	2.49
T6	0.2	1863	520	0.37	T6	0.2	2029	440	0.31
	0.4	1748	587	0.42		0.4	1855	519	0.37
	0.6	1403	671	0.48		0.6	1666	593	0.42
	0.8	-	-	-		0.8	-	-	-
	1.0	-	-	-		1.0	-	-	-
	1.2	-	-	-		1.2	-	-	-
	1.4	-	-	-		1.4	-	-	-
T7	0.2	2398	602	0.64	T7	0.2	2645	528	0.56
	0.4	2270	665	0.70		0.4	2515	577	0.61
	0.6	2161	719	0.76		0.6	2360	634	0.67
	0.8	1948	774	0.82		0.8	2137	694	0.74
	1.0	1818	821	0.87		1.0	1801	757	0.80
	1.2	1520	901	0.95		1.2	1532	814	0.86
	1.4	1487	951	1.01		1.4	-	-	-
T8	0.2	2398	602	0.64	T8	0.2	2645	528	0.56
	0.4	2270	665	0.70		0.4	2515	577	0.61
	0.6	2161	719	0.76		0.6	2360	634	0.67
	0.8	1948	774	0.82		0.8	2137	694	0.74
	1.0	1818	821	0.87		1.0	1801	757	0.80
	1.2	-	-	-		1.2	-	-	-
	1.4	-	-	-		1.4	-	-	-
T9	0.2	3203	753	1.25	T9	0.2	3664	603	1.01
	0.4	3097	795	1.32		0.4	3429	666	1.11
	0.6	2992	833	1.39		0.6	3240	718	1.20
	0.8	2871	874	1.46		0.8	3088	761	1.27
	1.0	2716	917	1.53		1.0	2883	808	1.35
	1.2	2580	951	1.59		1.2	2651	857	1.43
	1.4	2375	1004	1.67		1.4	2470	900	1.50
T10	0.2	3879	753	1.72	T10	0.2	-	-	-
	0.4	3777	802	1.83		0.4	-	-	-
	0.6	3658	923	2.11		0.6	-	-	-
	0.8	3532	980	2.24		0.8	-	-	-
	1.0	3416	1008	2.30		1.0	3711	872	1.99
	1.2	3280	1038	2.37		1.2	3501	907	2.07
	1.4	3152	1071	2.45		1.4	2986	951	2.17

Note:

- Taps T1 and T2 are for first stage of cooling only. Taps T6 and T7 are for first stage of heating only. Refer to page 11 for speed tap selection.
- Shaded area are not recommended for cooling or heating operation.
- Airflow table includes resistance for base unit only with 2" clean air filters in place.
  Any Additional air resistance caused by factory or field installed options or accessories must be added to the ESP in order to select the correct speed tap.

APPENDIX A BLOWER PERFORMANCE TABLES

8.5 Ton
130 MBH Gas Heat Exchanger
High Static Direct Drive
Models: DRG1023WL, DRG1024WL, DRG1027WL

Down Flow				
Speed Tap	ESP	CFM	RPM	BHP
T1	0.2	1714	496	0.32
	0.4	-	-	-
	0.6	-	-	-
	0.8	-	-	-
	1.0	-	-	-
	1.2	-	-	-
	1.4	-	-	-
	1.6	-	-	-
	1.8	-	-	-
	2.0	-	-	-
T2	0.2	3674	820	1.66
	0.4	3544	853	1.73
	0.6	3402	889	1.80
	0.8	3235	920	1.86
	1.0	3055	956	1.94
	1.2	2891	986	2.00
	1.4	2708	1011	2.05
	1.6	2499	1071	2.17
	1.8	2307	1103	2.23
	2.0	2054	1146	2.32
T3	0.2	2798	671	0.88
	0.4	2687	713	0.93
	0.6	-	-	-
	0.8	-	-	-
	1.0	-	-	-
	1.2	-	-	-
	1.4	-	-	-
	1.6	-	-	-
	1.8	-	-	-
	2.0	-	-	-
T4	0.2	4166	907	2.22
	0.4	4029	939	2.30
	0.6	3906	969	2.37
	0.8	3717	1003	2.45
	1.0	3544	1037	2.54
	1.2	3394	1064	2.60
	1.4	3219	1092	2.67
	1.6	3060	1121	2.74
	1.8	2887	1148	2.81
	2.0	2721	1176	2.88
T5	0.2	-	-	-
	0.4	-	-	-
	0.6	4221	1022	2.85
	0.8	4047	1052	2.93
	1.0	3889	1084	3.02
	1.2	3734	1109	3.09
	1.4	3555	1133	3.16
	1.6	3396	1162	3.24
	1.8	3210	1186	3.30
	2.0	3041	1211	3.37

Horizontal Flow				
Speed Tap	ESP	CFM	RPM	BHP
T1	0.2	1856	423	0.27
	0.4	-	-	-
	0.6	-	-	-
	0.8	-	-	-
	1.0	-	-	-
	1.2	-	-	-
	1.4	-	-	-
	1.6	-	-	-
	1.8	-	-	-
	2.0	-	-	-
T2	0.2	4061	675	1.37
	0.4	3919	720	1.46
	0.6	3792	761	1.54
	0.8	3610	802	1.62
	1.0	3427	845	1.71
	1.2	3261	894	1.81
	1.4	3042	919	1.86
	1.6	2865	962	1.95
	1.8	2649	1020	2.06
	2.0	2487	1041	2.11
T3	0.2	3144	564	0.74
	0.4	3005	607	0.79
	0.6	2824	671	0.88
	0.8	2661	722	0.95
	1.0	-	-	-
	1.2	-	-	-
	1.4	-	-	-
	1.6	-	-	-
	1.8	-	-	-
	2.0	-	-	-
T4	0.2	-	-	-
	0.4	-	-	-
	0.6	4261	812	1.99
	0.8	4051	849	2.08
	1.0	3857	885	2.17
	1.2	3718	922	2.25
	1.4	3536	957	2.34
	1.6	3369	993	2.43
	1.8	3199	1028	2.52
	2.0	3048	1064	2.60
T5	0.2	-	-	-
	0.4	-	-	-
	0.6	-	-	-
	0.8	-	-	-
	1.0	-	-	-
	1.2	4145	950	2.65
	1.4	3925	986	2.75
	1.6	3783	1018	2.84
	1.8	3606	1051	2.93
	2.0	3415	1085	3.02

Down Flow				
Speed Tap	ESP	CFM	RPM	BHP
T6	0.2	2398	602	0.64
	0.4	2270	665	0.70
	0.6	2161	719	0.76
	0.8	1948	774	0.82
	1.0	1818	821	0.87
	1.2	1520	901	0.95
	1.4	-	-	-
	1.6	-	-	-
	1.8	-	-	-
	2.0	-	-	-
T7	0.2	-	-	-
	0.4	2729	741	1.06
	0.6	2574	789	1.13
	0.8	2447	824	1.18
	1.0	2310	847	1.21
	1.2	2126	857	1.22
	1.4	1858	948	1.35
	1.6	1746	1021	1.46
	1.8	1577	1075	1.54
	2.0	1420	1111	1.59
T8	0.2	2947	695	1.01
	0.4	2787	749	1.09
	0.6	2649	786	1.14
	0.8	2539	829	1.20
	1.0	2287	872	1.26
	1.2	2202	917	1.33
	1.4	1896	972	1.41
	1.6	-	-	-
	1.8	-	-	-
	2.0	-	-	-
T9	0.2	3704	751	1.59
	0.4	3606	786	1.67
	0.6	3491	903	1.92
	0.8	3366	951	2.02
	1.0	3247	981	2.08
	1.2	3108	1015	2.15
	1.4	2970	1050	2.23
	1.6	2833	1082	2.30
	1.8	2661	1117	2.37
	2.0	2477	1179	2.50
T10	0.2	-	-	-
	0.4	-	-	-
	0.6	-	-	-
	0.8	-	-	-
	1.0	3867	1078	3.00
	1.2	3743	1109	3.09
	1.4	3606	1138	3.17
	1.6	3474	1165	3.25
	1.8	3340	1193	3.32
	2.0	3204	1219	3.40

Horizontal Flow				
Speed Tap	ESP	CFM	RPM	BHP
T6	0.2	2645	528	0.56
	0.4	2515	577	0.61
	0.6	2360	634	0.67
	0.8	2137	694	0.74
	1.0	1801	757	0.80
	1.2	1532	814	0.86
	1.4	-	-	-
	1.6	-	-	-
	1.8	-	-	-
	2.0	-	-	-
T7	0.2	-	-	-
	0.4	-	-	-
	0.6	-	-	-
	0.8	2767	734	1.05
	1.0	2539	781	1.12
	1.2	2280	837	1.20
	1.4	2083	892	1.27
	1.6	1834	946	1.35
	1.8	1477	1014	1.45
	2.0	-	-	-
T8	0.2	3354	587	0.85
	0.4	3145	635	0.92
	0.6	2952	685	0.99
	0.8	2776	736	1.07
	1.0	2573	785	1.14
	1.2	2318	840	1.22
	1.4	2119	896	1.30
	1.6	1875	950	1.38
	1.8	-	-	-
	2.0	-	-	-
T9	0.2	-	-	-
	0.4	-	-	-
	0.6	-	-	-
	0.8	3761	817	1.73
	1.0	3588	854	1.81
	1.2	3342	894	1.90
	1.4	3145	938	1.99
	1.6	2888	981	2.08
	1.8	2688	1022	2.17
	2.0	2433	1065	2.26
T10	0.2	-	-	-
	0.4	-	-	-
	0.6	-	-	-
	0.8	-	-	-
	1.0	-	-	-
	1.2	-	-	-
	1.4	-	-	-
	1.6	3767	1022	2.85
	1.8	3581	1060	2.95
	2.0	3370	1096	3.05

Note:

- Taps T1 and T2 are for first stage of cooling only. Taps T6 and T7 are for first stage of heating only. Refer to page 11 for speed tap selection.
- Shaded area are not recommended for cooling or heating operation.
- Airflow table includes resistance for base unit only with 2" clean air filters in place.
  Any Additional air resistance caused by factory or field installed options or accessories must be added to the ESP in order to select the correct speed tap.

APPENDIX A BLOWER PERFORMANCE TABLES

8.5 Ton
180 MBH Gas Heat Exchanger
Standard Static Direct Drive
Models: DRG1023DM, DRG1024DM, DRG1027DM

Down Flow					Horizontal Flow				
Speed Tap	ESP	CFM	RPM	BHP	Speed Tap	ESP	CFM	RPM	BHP
T1	0.2	1902	520	0.37	T1	0.2	2029	440	0.31
	0.4	-	-	-		0.4	-	-	-
	0.6	-	-	-		0.6	-	-	-
	0.8	-	-	-		0.8	-	-	-
T2	0.2	2365	599	0.61	T2	0.2	2671	503	0.51
	0.4	2208	649	0.66		0.4	2492	568	0.57
	0.6	2048	695	0.70		0.6	2335	628	0.64
	0.8	1892	736	0.74		0.8	2027	690	0.70
T3	0.2	3026	709	1.06	T3	0.2	3391	593	0.88
	0.4	2905	748	1.11		0.4	3245	641	0.95
	0.6	2735	788	1.17		0.6	3095	693	1.03
	0.8	2593	831	1.24		0.8	2948	739	1.10
T4	0.2	3522	795	1.51	T4	0.2	3921	655	1.25
	0.4	3389	828	1.58		0.4	3775	700	1.33
	0.6	3240	865	1.65		0.6	3630	745	1.42
	0.8	3083	898	1.71		0.8	3449	786	1.50
T5	0.2	3830	847	1.83	T5	0.2	4210	694	1.49
	0.4	3702	881	1.90		0.4	4071	737	1.59
	0.6	3563	915	1.97		0.6	3942	777	1.67
	0.8	3399	946	2.04		0.8	3746	819	1.76
T6	0.2	1539	469	0.27	T6	0.2	1650	405	0.23
	0.4	1317	556	0.31		0.4	1369	515	0.29
	0.6	994	634	0.36		0.6	1105	589	0.33
	0.8	-	-	-		0.8	-	-	-
T7	0.2	2327	591	0.60	T7	0.2	2571	513	0.52
	0.4	2207	655	0.66		0.4	2433	570	0.58
	0.6	2098	712	0.72		0.6	2261	630	0.64
	0.8	1865	770	0.78		0.8	2042	690	0.70
T8	0.2	2266	588	0.56	T8	0.2	2491	493	0.47
	0.4	2126	638	0.61		0.4	2318	560	0.53
	0.6	1989	694	0.66		0.6	2125	625	0.60
	0.8	1747	765	0.73		0.8	1918	683	0.65
T9	0.2	2743	658	0.85	T9	0.2	3073	572	0.74
	0.4	2585	717	0.93		0.4	2909	613	0.80
	0.6	2443	759	0.99		0.6	2751	663	0.86
	0.8	-	-	-		0.8	2547	719	0.93
T10	0.2	3182	743	1.22	T10	0.2	3655	604	0.99
	0.4	3041	788	1.30		0.4	3427	663	1.09
	0.6	2953	821	1.35		0.6	3210	714	1.17
	0.8	2797	868	1.43		0.8	3066	759	1.25

8.5 Ton
180 MBH Gas Heat Exchanger
Medium Static Direct Drive
Models: DRG1023LM, DRG1024LM, DRG1027LM

Down Flow					Horizontal Flow				
Speed Tap	ESP	CFM	RPM	BHP	Speed Tap	ESP	CFM	RPM	BHP
T1	0.2	1863	520	0.37	T1	0.2	2029	440	0.31
	0.4	-	-	-		0.4	1855	519	0.37
	0.6	-	-	-		0.6	-	-	-
	0.8	-	-	-		0.8	-	-	-
	1.0	-	-	-		1.0	-	-	-
	1.2	-	-	-		1.2	-	-	-
	1.4	-	-	-		1.4	-	-	-
T2	0.2	3114	722	1.12	T2	0.2	3458	603	0.93
	0.4	2977	761	1.18		0.4	3292	658	1.02
	0.6	2825	800	1.24		0.6	3155	700	1.08
	0.8	2634	846	1.31		0.8	3007	747	1.16
	1.0	2474	878	1.36		1.0	2844	797	1.23
	1.2	2236	931	1.44		1.2	2681	836	1.29
	1.4	1990	986	1.53		1.4	2469	885	1.37
T3	0.2	3026	709	1.06	T3	0.2	3391	593	0.88
	0.4	2905	748	1.11		0.4	3245	641	0.95
	0.6	2735	788	1.17		0.6	3095	693	1.03
	0.8	2593	831	1.24		0.8	2948	739	1.10
	1.0	-	-	-		1.0	2789	789	1.17
	1.2	-	-	-		1.2	2614	847	1.26
	1.4	-	-	-		1.4	-	-	-
T4	0.2	3997	874	1.99	T4	0.2	-	-	-
	0.4	3869	909	2.07		0.4	4200	754	1.71
	0.6	3740	942	2.14		0.6	4070	791	1.80
	0.8	3578	975	2.22		0.8	3879	838	1.91
	1.0	3417	1009	2.29		1.0	3699	874	1.99
	1.2	3257	1039	2.36		1.2	3535	923	2.10
	1.4	3091	1069	2.43		1.4	3341	946	2.15
T5	0.2	-	-	-	T5	0.2	-	-	-
	0.4	4125	958	2.46		0.4	-	-	-
	0.6	3997	992	2.55		0.6	-	-	-
	0.8	3806	1021	2.63		0.8	4194	863	2.22
	1.0	3701	1056	2.72		1.0	4012	898	2.31
	1.2	3547	1081	2.78		1.2	3879	955	2.45
	1.4	3374	1101	2.83		1.4	3683	967	2.49
T6	0.2	2137	563	0.50	T6	0.2	2382	479	0.42
	0.4	2041	626	0.56		0.4	2229	549	0.49
	0.6	1888	692	0.61		0.6	2053	611	0.54
	0.8	-	-	-		0.8	-	-	-
	1.0	-	-	-		1.0	-	-	-
	1.2	-	-	-		1.2	-	-	-
	1.4	-	-	-		1.4	-	-	-
T7	0.2	2948	681	0.97	T7	0.2	3346	591	0.84
	0.4	2729	741	1.06		0.4	3123	632	0.90
	0.6	2574	789	1.13		0.6	2931	681	0.97
	0.8	2447	824	1.18		0.8	2767	734	1.05
	1.0	2310	847	1.21		1.0	2539	781	1.12
	1.2	2126	857	1.22		1.2	2280	837	1.20
	1.4	1858	948	1.35		1.4	2083	892	1.27
T8	0.2	3256	760	1.30	T8	0.2	3734	613	1.05
	0.4	3128	802	1.37		0.4	3520	673	1.15
	0.6	3059	834	1.42		0.6	3311	723	1.24
	0.8	2885	884	1.51		0.8	3172	767	1.31
	1.0	2779	916	1.6		1.0	2951	811	1.39
	1.2	2619	955	1.63		1.2	2724	859	1.47
	1.4	2449	1000	1.71		1.4	2547	909	1.55
T9	0.2	3571	777	1.55	T9	0.2	3992	669	1.34
	0.4	3475	815	1.63		0.4	3881	710	1.42
	0.6	3364	887	1.77		0.6	3776	756	1.51
	0.8	3239	920	1.84		0.8	3631	804	1.61
	1.0	3115	957	1.91		1.0	3474	841	1.68
	1.2	2974	997	2.00		1.2	3329	884	1.77
	1.4	2825	1031	2.06		1.4	3125	928	1.86
T10	0.2	3879	753	1.72	T10	0.2	4350	708	1.62
	0.4	3777	802	1.83		0.4	4212	747	1.71
	0.6	3658	923	2.11		0.6	4054	789	1.80
	0.8	3532	980	2.24		0.8	3912	834	1.91
	1.0	3416	1008	2.30		1.0	3711	872	1.99
	1.2	3280	1038	2.37		1.2	3501	907	2.07
	1.4	3152	1071	2.45		1.4	2986	951	2.17

Note:

- Taps T1 and T2 are for first stage of cooling only. Taps T6 and T7 are for first stage of heating only. Refer to page 11 for speed tap selection.
- Shaded area are not recommended for cooling or heating operation.
- Airflow table includes resistance for base unit only with 2" clean air filters in place.
  Any Additional air resistance caused by factory or field installed options or accessories must be added to the ESP in order to select the correct speed tap.

APPENDIX A BLOWER PERFORMANCE TABLES

8.5 Ton
180 MBH Gas Heat Exchanger
High Static Direct Drive
Models: DRG1023WM, DRG1024WM, DRG1027WM

Down Flow				
Speed Tap	ESP	CFM	RPM	BHP
T1	0.2	1863	520	0.37
	0.4	-	-	-
	0.6	-	-	-
	0.8	-	-	-
	1.0	-	-	-
	1.2	-	-	-
	1.4	-	-	-
	1.6	-	-	-
	1.8	-	-	-
	2.0	-	-	-
T2	0.2	3674	820	1.66
	0.4	3544	853	1.73
	0.6	3402	889	1.80
	0.8	3235	920	1.86
	1.0	3055	956	1.94
	1.2	2891	986	2.00
	1.4	2708	1011	2.05
	1.6	2499	1071	2.17
	1.8	2307	1103	2.23
	2.0	2054	1146	2.32
T3	0.2	3026	709	1.06
	0.4	2905	748	1.11
	0.6	2735	788	1.17
	0.8	2593	831	1.24
	1.0	-	-	-
	1.2	-	-	-
	1.4	-	-	-
	1.6	-	-	-
	1.8	-	-	-
	2.0	-	-	-
T4	0.2	4166	907	2.22
	0.4	4029	939	2.30
	0.6	3906	969	2.37
	0.8	3717	1003	2.45
	1.0	3544	1037	2.54
	1.2	3394	1064	2.60
	1.4	3219	1092	2.67
	1.6	3060	1121	2.74
	1.8	2887	1148	2.81
	2.0	2721	1176	2.88
T5	0.2	-	-	-
	0.4	-	-	-
	0.6	4221	1022	2.85
	0.8	4047	1052	2.93
	1.0	3889	1084	3.02
	1.2	3734	1109	3.09
	1.4	3555	1133	3.16
	1.6	3396	1162	3.24
	1.8	3210	1186	3.30
	2.0	3041	1211	3.37

Horizontal Flow				
Speed Tap	ESP	CFM	RPM	BHP
T1	0.2	2029	440	0.31
	0.4	1855	519	0.37
	0.6	-	-	-
	0.8	-	-	-
	1.0	-	-	-
	1.2	-	-	-
	1.4	-	-	-
	1.6	-	-	-
	1.8	-	-	-
	2.0	-	-	-
T2	0.2	4061	675	1.37
	0.4	3919	720	1.46
	0.6	3792	761	1.54
	0.8	3610	802	1.62
	1.0	3427	845	1.71
	1.2	3261	894	1.81
	1.4	3042	919	1.86
	1.6	2865	962	1.95
	1.8	2649	1020	2.06
	2.0	2487	1041	2.11
T3	0.2	3391	593	0.88
	0.4	3245	641	0.95
	0.6	3095	693	1.03
	0.8	2948	739	1.10
	1.0	2789	789	1.17
	1.2	2614	847	1.26
	1.4	-	-	-
	1.6	-	-	-
	1.8	-	-	-
	2.0	-	-	-
T4	0.2	-	-	-
	0.4	-	-	-
	0.6	-	-	-
	0.8	4051	849	2.08
	1.0	3857	885	2.17
	1.2	3718	922	2.25
	1.4	3536	957	2.34
	1.6	3369	993	2.43
	1.8	3199	1028	2.52
	2.0	3048	1064	2.60
T5	0.2	-	-	-
	0.4	-	-	-
	0.6	-	-	-
	0.8	-	-	-
	1.0	-	-	-
	1.2	4145	950	2.65
	1.4	3925	986	2.75
	1.6	3783	1018	2.84
	1.8	3606	1051	2.93
	2.0	3415	1085	3.02

Down Flow				
Speed Tap	ESP	CFM	RPM	BHP
T6	0.2	2464	612	0.68
	0.4	2329	675	0.75
	0.6	2215	727	0.80
	0.8	2022	778	0.86
	1.0	-	-	-
	1.2	-	-	-
	1.4	-	-	-
	1.6	-	-	-
	1.8	-	-	-
	2.0	-	-	-
T7	0.2	3302	768	1.35
	0.4	3209	847	1.49
	0.6	3103	851	1.50
	0.8	2979	886	1.56
	1.0	2840	930	1.64
	1.2	2696	964	1.70
	1.4	2513	1027	1.81
	1.6	2312	1039	1.83
	1.8	2123	1102	1.94
	2.0	1895	1155	2.03
T8	0.2	3392	853	1.57
	0.4	3298	852	1.57
	0.6	3191	864	1.59
	0.8	3066	864	1.59
	1.0	2933	915	1.68
	1.2	2790	975	1.79
	1.4	2620	1002	1.84
	1.6	-	-	-
	1.8	-	-	-
	2.0	-	-	-
T9	0.2	3912	757	1.75
	0.4	3808	816	1.89
	0.6	3689	927	2.15
	0.8	3562	984	2.28
	1.0	3447	1012	2.35
	1.2	3312	1042	2.41
	1.4	3185	1075	2.49
	1.6	3063	1106	2.56
	1.8	2903	1126	2.61
	2.0	2773	1181	2.74
T10	0.2	4380	941	2.62
	0.4	4256	977	2.72
	0.6	4126	1012	2.82
	0.8	3991	1046	2.91
	1.0	3867	1078	3.00
	1.2	3743	1109	3.09
	1.4	3606	1138	3.17
	1.6	3474	1165	3.25
	1.8	3340	1193	3.32
	2.0	3204	1219	3.40

Horizontal Flow				
Speed Tap	ESP	CFM	RPM	BHP
T6	0.2	2719	539	0.60
	0.4	2590	584	0.64
	0.6	2444	638	0.70
	0.8	2221	699	0.77
	1.0	1930	759	0.84
	1.2	-	-	-
	1.4	-	-	-
	1.6	-	-	-
	1.8	-	-	-
	2.0	-	-	-
T7	0.2	3734	626	1.10
	0.4	3574	679	1.20
	0.6	3431	729	1.28
	0.8	3283	775	1.37
	1.0	3115	817	1.44
	1.2	2941	865	1.52
	1.4	2747	908	1.60
	1.6	2425	958	1.69
	1.8	2211	1011	1.78
	2.0	1860	1086	1.91
T8	0.2	3835	638	1.17
	0.4	3695	691	1.27
	0.6	3544	739	1.36
	0.8	3402	784	1.44
	1.0	3228	826	1.52
	1.2	3034	870	1.60
	1.4	2840	920	1.69
	1.6	2615	962	1.77
	1.8	-	-	-
	2.0	-	-	-
T9	0.2	4388	712	1.65
	0.4	4245	751	1.74
	0.6	4081	792	1.84
	0.8	3940	837	1.94
	1.0	3734	875	2.03
	1.2	3539	910	2.11
	1.4	3317	953	2.21
	1.6	3092	995	2.31
	1.8	2880	1030	2.39
	2.0	2653	1068	2.48
T10	0.2	4802	776	2.16
	0.4	4695	811	2.26
	0.6	4585	847	2.36
	0.8	4462	883	2.46
	1.0	4315	922	2.57
	1.2	4153	952	2.65
	1.4	3975	989	2.76
	1.6	3767	1022	2.85
	1.8	3581	1060	2.95
	2.0	3370	1096	3.05

Note:

- Taps T1 and T2 are for first stage of cooling only. Taps T6 and T7 are for first stage of heating only. Refer to page 11 for speed tap selection.
- Shaded area are not recommended for cooling or heating operation.
- Airflow table includes resistance for base unit only with 2" clean air filters in place.
  Any Additional air resistance caused by factory or field installed options or accessories must be added to the ESP in order to select the correct speed tap.

APPENDIX A BLOWER PERFORMANCE TABLES

8.5 Ton
225 MBH Gas Heat Exchanger
Standard Static Direct Drive
Models: DRG1023DH, DRG1024DH, DRG1027DH

Down Flow					Horizontal Flow				
Speed Tap	ESP	CFM	RPM	BHP	Speed Tap	ESP	CFM	RPM	BHP
T1	0.2	1902	520	0.37	T1	0.2	2029	440	0.31
	0.4	-	-	-		0.4	-	-	-
	0.6	-	-	-		0.6	-	-	-
	0.8	-	-	-		0.8	-	-	-
T2	0.2	2365	599	0.61	T2	0.2	2671	503	0.51
	0.4	2208	649	0.66		0.4	2492	568	0.57
	0.6	2048	695	0.70		0.6	2335	628	0.64
	0.8	1892	736	0.74		0.8	2027	690	0.70
T3	0.2	3026	709	1.06	T3	0.2	3391	593	0.88
	0.4	2905	748	1.11		0.4	3245	641	0.95
	0.6	2735	788	1.17		0.6	3095	693	1.03
	0.8	2593	831	1.24		0.8	2948	739	1.10
T4	0.2	3522	795	1.51	T4	0.2	3921	655	1.25
	0.4	3389	828	1.58		0.4	3775	700	1.33
	0.6	3240	865	1.65		0.6	3630	745	1.42
	0.8	3083	898	1.71		0.8	3449	786	1.50
T5	0.2	3830	847	1.83	T5	0.2	4210	694	1.49
	0.4	3702	881	1.90		0.4	4071	737	1.59
	0.6	3563	915	1.97		0.6	3942	777	1.67
	0.8	3399	946	2.04		0.8	3746	819	1.76
T6	0.2	2024	546	0.44	T6	0.2	2216	459	0.37
	0.4	1928	606	0.48		0.4	2066	533	0.43
	0.6	-	-	-		0.6	1894	599	0.48
	0.8	-	-	-		0.8	-	-	-
T7	0.2	2398	602	0.64	T7	0.2	2645	528	0.56
	0.4	2270	665	0.70		0.4	2515	577	0.61
	0.6	2161	719	0.76		0.6	2360	634	0.67
	0.8	1948	774	0.82		0.8	2137	694	0.74
T8	0.2	2774	663	0.88	T8	0.2	3116	575	0.76
	0.4	2615	722	0.95		0.4	2944	616	0.81
	0.6	2471	763	1.01		0.6	2782	666	0.88
	0.8	-	-	-		0.8	2582	722	0.95
T9	0.2	2988	703	1.04	T9	0.2	3410	589	0.87
	0.4	2829	756	1.12		0.4	3193	640	0.95
	0.6	2697	792	1.17		0.6	2993	690	1.02
	0.8	2583	835	1.24		0.8	2823	740	1.10
T10	0.2	3182	743	1.22	T10	0.2	3655	604	0.99
	0.4	3041	788	1.30		0.4	3427	663	1.09
	0.6	2953	821	1.35		0.6	3210	714	1.17
	0.8	2797	868	1.43		0.8	3066	759	1.25

8.5 Ton
225 MBH Gas Heat Exchanger
Medium Static Direct Drive
Models: DRG1023LH, DRG1024LH, DRG1027LH

Down Flow					Horizontal Flow				
Speed Tap	ESP	CFM	RPM	BHP	Speed Tap	ESP	CFM	RPM	BHP
T1	0.2	1863	520	0.37	T1	0.2	2029	440	0.31
	0.4	-	-	-		0.4	1855	519	0.37
	0.6	-	-	-		0.6	-	-	-
	0.8	-	-	-		0.8	-	-	-
	1.0	-	-	-		1.0	-	-	-
	1.2	-	-	-		1.2	-	-	-
	1.4	-	-	-		1.4	-	-	-
T2	0.2	3114	722	1.12	T2	0.2	3458	603	0.93
	0.4	2977	761	1.18		0.4	3292	658	1.02
	0.6	2825	800	1.24		0.6	3155	700	1.08
	0.8	2634	846	1.31		0.8	3007	747	1.16
	1.0	2474	878	1.36		1.0	2844	797	1.23
	1.2	2236	931	1.44		1.2	2681	836	1.29
	1.4	1990	986	1.53		1.4	2469	885	1.37
T3	0.2	3026	709	1.06	T3	0.2	3391	593	0.88
	0.4	2905	748	1.11		0.4	3245	641	0.95
	0.6	2735	788	1.17		0.6	3095	693	1.03
	0.8	2593	831	1.24		0.8	2948	739	1.10
	1.0	-	-	-		1.0	2789	789	1.17
	1.2	-	-	-		1.2	2614	847	1.26
	1.4	-	-	-		1.4	-	-	-
T4	0.2	3997	874	1.99	T4	0.2	-	-	-
	0.4	3869	909	2.07		0.4	4200	754	1.71
	0.6	3740	942	2.14		0.6	4070	791	1.80
	0.8	3578	975	2.22		0.8	3879	838	1.91
	1.0	3417	1009	2.29		1.0	3699	874	1.99
	1.2	3257	1039	2.36		1.2	3535	923	2.10
	1.4	3091	1069	2.43		1.4	3341	946	2.15
T5	0.2	-	-	-	T5	0.2	-	-	-
	0.4	4125	958	2.46		0.4	-	-	-
	0.6	3997	992	2.55		0.6	-	-	-
	0.8	3806	1021	2.63		0.8	4194	863	2.22
	1.0	3701	1056	2.72		1.0	4012	898	2.31
	1.2	3547	1081	2.78		1.2	3879	955	2.45
	1.4	3374	1101	2.83		1.4	3683	967	2.49
T6	0.2	2202	572	0.53	T6	0.2	2455	488	0.45
	0.4	2098	636	0.59		0.4	2291	558	0.52
	0.6	1969	698	0.65		0.6	2105	618	0.57
	0.8	-	-	-		0.8	1842	688	0.64
	1.0	-	-	-		1.0	-	-	-
	1.2	-	-	-		1.2	-	-	-
	1.4	-	-	-		1.4	-	-	-
T7	0.2	2948	681	0.97	T7	0.2	-	-	-
	0.4	2729	741	1.06		0.4	3123	632	0.90
	0.6	2574	789	1.13		0.6	2931	681	0.97
	0.8	2447	824	1.18		0.8	2767	734	1.05
	1.0	2310	847	1.21		1.0	2539	781	1.12
	1.2	2126	857	1.22		1.2	2280	837	1.20
	1.4	1858	948	1.35		1.4	2083	892	1.27
T8	0.2	3256	760	1.30	T8	0.2	3734	613	1.05
	0.4	3128	802	1.37		0.4	3520	673	1.15
	0.6	3059	834	1.42		0.6	3311	723	1.24
	0.8	2885	884	1.51		0.8	3172	767	1.31
	1.0	2779	916	1.6		1.0	2951	811	1.39
	1.2	2619	955	1.63		1.2	2724	859	1.47
	1.4	2449	1000	1.71		1.4	2547	909	1.55
T9	0.2	3571	777	1.55	T9	0.2	3992	669	1.34
	0.4	3475	815	1.63		0.4	3881	710	1.42
	0.6	3364	887	1.77		0.6	3776	756	1.51
	0.8	3239	920	1.84		0.8	3631	804	1.61
	1.0	3115	957	1.91		1.0	3474	841	1.68
	1.2	2974	997	2.00		1.2	3329	884	1.77
	1.4	2825	1031	2.06		1.4	3125	928	1.86
T10	0.2	3879	753	1.72	T10	0.2	-	-	-
	0.4	3777	802	1.83		0.4	-	-	-
	0.6	3658	923	2.11		0.6	4054	789	1.80
	0.8	3532	980	2.24		0.8	3912	834	1.91
	1.0	3416	1008	2.30		1.0	3711	872	1.99
	1.2	3280	1038	2.37		1.2	3501	907	2.07
	1.4	3152	1071	2.45		1.4	2986	951	2.17

Note:

- Taps T1 and T2 are for first stage of cooling only. Taps T6 and T7 are for first stage of heating only. Refer to page 11 for speed tap selection.
- Shaded area are not recommended for cooling or heating operation.
- Airflow table includes resistance for base unit only with 2" clean air filters in place.
  Any Additional air resistance caused by factory or field installed options or accessories must be added to the ESP in order to select the correct speed tap.

APPENDIX A BLOWER PERFORMANCE TABLES

8.5 Ton
225 MBH Gas Heat Exchanger
High Static Direct Drive
Models: DRG1023WH, DRG1024WH, DRG1027WH

Down Flow				
Speed Tap	ESP	CFM	RPM	BHP
T1	0.2	1863	520	0.37
	0.4	-	-	-
	0.6	-	-	-
	0.8	-	-	-
	1.0	-	-	-
	1.2	-	-	-
	1.4	-	-	-
	1.6	-	-	-
	1.8	-	-	-
	2.0	-	-	-
T2	0.2	3674	820	1.66
	0.4	3544	853	1.73
	0.6	3402	889	1.80
	0.8	3235	920	1.86
	1.0	3055	956	1.94
	1.2	2891	986	2.00
	1.4	2708	1011	2.05
	1.6	2499	1071	2.17
	1.8	2307	1103	2.23
	2.0	2054	1146	2.32
T3	0.2	3026	709	1.06
	0.4	2905	748	1.11
	0.6	2735	788	1.17
	0.8	2593	831	1.24
	1.0	-	-	-
	1.2	-	-	-
	1.4	-	-	-
	1.6	-	-	-
	1.8	-	-	-
	2.0	-	-	-
T4	0.2	4166	907	2.22
	0.4	4029	939	2.30
	0.6	3906	969	2.37
	0.8	3717	1003	2.45
	1.0	3544	1037	2.54
	1.2	3394	1064	2.60
	1.4	3219	1092	2.67
	1.6	3060	1121	2.74
	1.8	2887	1148	2.81
	2.0	2721	1176	2.88
T5	0.2	-	-	-
	0.4	-	-	-
	0.6	4221	1022	2.85
	0.8	4047	1052	2.93
	1.0	3889	1084	3.02
	1.2	3734	1109	3.09
	1.4	3555	1133	3.16
	1.6	3396	1162	3.24
	1.8	3210	1186	3.30
	2.0	3041	1211	3.37

Horizontal Flow				
Speed Tap	ESP	CFM	RPM	BHP
T1	0.2	2029	440	0.31
	0.4	1855	519	0.37
	0.6	-	-	-
	0.8	-	-	-
	1.0	-	-	-
	1.2	-	-	-
	1.4	-	-	-
	1.6	-	-	-
	1.8	-	-	-
	2.0	-	-	-
T2	0.2	4061	675	1.37
	0.4	3919	720	1.46
	0.6	3792	761	1.54
	0.8	3610	802	1.62
	1.0	3427	845	1.71
	1.2	3261	894	1.81
	1.4	3042	919	1.86
	1.6	2865	962	1.95
	1.8	2649	1020	2.06
	2.0	2487	1041	2.11
T3	0.2	3391	593	0.88
	0.4	3245	641	0.95
	0.6	3095	693	1.03
	0.8	2948	739	1.10
	1.0	2789	789	1.17
	1.2	2614	847	1.26
	1.4	-	-	-
	1.6	-	-	-
	1.8	-	-	-
	2.0	-	-	-
T4	0.2	-	-	-
	0.4	-	-	-
	0.6	-	-	-
	0.8	4051	849	2.08
	1.0	3857	885	2.17
	1.2	3718	922	2.25
	1.4	3536	957	2.34
	1.6	3369	993	2.43
	1.8	3199	1028	2.52
	2.0	3048	1064	2.60
T5	0.2	-	-	-
	0.4	-	-	-
	0.6	-	-	-
	0.8	-	-	-
	1.0	-	-	-
	1.2	4145	950	2.65
	1.4	3925	986	2.75
	1.6	3783	1018	2.84
	1.8	3606	1051	2.93
	2.0	3415	1085	3.02

Down Flow				
Speed Tap	ESP	CFM	RPM	BHP
T6	0.2	2522	621	0.71
	0.4	2381	684	0.78
	0.6	2261	733	0.84
	0.8	2087	783	0.89
	1.0	-	-	-
	1.2	-	-	-
	1.4	-	-	-
	1.6	-	-	-
	1.8	-	-	-
	2.0	-	-	-
T7	0.2	-	-	-
	0.4	-	-	-
	0.6	3103	851	1.50
	0.8	2979	886	1.56
	1.0	2840	930	1.64
	1.2	2696	964	1.70
	1.4	2513	1027	1.81
	1.6	2312	1039	1.83
	1.8	2123	1102	1.94
	2.0	1895	1155	2.03
T8	0.2	3531	789	1.55
	0.4	3436	825	1.62
	0.6	3325	882	1.73
	0.8	3201	910	1.79
	1.0	3075	948	1.86
	1.2	2934	992	1.95
	1.4	2780	1025	2.01
	1.6	2620	1063	2.09
	1.8	2441	1111	2.18
	2.0	-	-	-
T9	0.2	3999	765	1.82
	0.4	3878	856	2.04
	0.6	3755	928	2.21
	0.8	3630	990	2.36
	1.0	3505	1020	2.43
	1.2	3378	1051	2.50
	1.4	3246	1083	2.58
	1.6	3113	1114	2.65
	1.8	2981	1138	2.71
	2.0	2846	1172	2.79
T10	0.2	-	-	-
	0.4	-	-	-
	0.6	4126	1012	2.82
	0.8	3991	1046	2.91
	1.0	3867	1078	3.00
	1.2	3743	1109	3.09
	1.4	3606	1138	3.17
	1.6	3474	1165	3.25
	1.8	3340	1193	3.32
	2.0	3204	1219	3.40

Horizontal Flow				
Speed Tap	ESP	CFM	RPM	BHP
T6	0.2	2787	548	0.63
	0.4	2656	590	0.67
	0.6	2514	643	0.73
	0.8	2292	703	0.80
	1.0	2032	762	0.87
	1.2	-	-	-
	1.4	-	-	-
	1.6	-	-	-
	1.8	-	-	-
	2.0	-	-	-
T7	0.2	-	-	-
	0.4	-	-	-
	0.6	-	-	-
	0.8	-	-	-
	1.0	3115	817	1.44
	1.2	2941	865	1.52
	1.4	2747	908	1.60
	1.6	2425	958	1.69
	1.8	2211	1011	1.78
	2.0	1860	1086	1.91
T8	0.2	3949	663	1.30
	0.4	3837	705	1.39
	0.6	3733	752	1.48
	0.8	3588	800	1.57
	1.0	3433	837	1.65
	1.2	3129	881	1.73
	1.4	3097	925	1.82
	1.6	2817	970	1.90
	1.8	2577	1016	2.00
	2.0	-	-	-
T9	0.2	-	-	-
	0.4	-	-	-
	0.6	4157	801	1.91
	0.8	4013	842	2.01
	1.0	3816	885	2.11
	1.2	3618	913	2.17
	1.4	3417	958	2.28
	1.6	3179	997	2.37
	1.8	2971	1036	2.47
	2.0	2740	1075	2.56
T10	0.2	-	-	-
	0.4	-	-	-
	0.6	-	-	-
	0.8	-	-	-
	1.0	-	-	-
	1.2	4153	952	2.65
	1.4	3975	989	2.76
	1.6	3767	1022	2.85
	1.8	3581	1060	2.95
	2.0	3370	1096	3.05

Note:

- Taps T1 and T2 are for first stage of cooling only. Taps T6 and T7 are for first stage of heating only. Refer to page 11 for speed tap selection.
- Shaded area are not recommended for cooling or heating operation.
- Airflow table includes resistance for base unit only with 2" clean air filters in place.
  Any Additional air resistance caused by factory or field installed options or accessories must be added to the ESP in order to select the correct speed tap.

APPENDIX A BLOWER PERFORMANCE TABLES

10 Ton
130 MBH Gas Heat Exchanger
Standard Static Direct Drive
Models: DRG1203DL, DRG1204DL, DRG1207DL

Down Flow					Horizontal Flow				
Speed Tap	ESP	CFM	RPM	BHP	Speed Tap	ESP	CFM	RPM	BHP
T1	0.2	2255	553	0.42	T1	0.2	2267	492	0.37
	0.4	-	-	-		0.4	-	-	-
	0.6	-	-	-		0.6	-	-	-
	0.8	-	-	-		0.8	-	-	-
T2	0.2	2910	654	0.78	T2	0.2	2942	562	0.67
	0.4	2702	687	0.82		0.4	2760	613	0.73
	0.6	2410	753	0.90		0.6	2431	706	0.84
	0.8	2250	827	0.98		0.8	2350	802	0.95
T3	0.2	3293	675	1.04	T3	0.2	3464	626	0.97
	0.4	3137	725	1.12		0.4	3294	683	1.06
	0.6	3010	766	1.19		0.6	3139	730	1.13
	0.8	-	-	-		0.8	-	-	-
T4	0.2	3940	774	1.62	T4	0.2	4159	707	1.48
	0.4	3827	812	1.70		0.4	4062	742	1.56
	0.6	3696	850	1.78		0.6	3880	794	1.66
	0.8	3571	892	1.87		0.8	3722	844	1.77
T5	0.2	4126	802	1.82	T5	0.2	4366	732	1.66
	0.4	4022	838	1.91		0.4	4177	786	1.79
	0.6	3889	877	1.99		0.6	4097	817	1.86
	0.8	3808	908	2.07		0.8	3973	854	1.94
T6	0.2	1756	460	0.24	T6	0.2	1853	430	0.24
	0.4	1547	535	0.29		0.4	1379	522	0.29
	0.6	1338	599	0.34		0.6	1363	845	0.47
	0.8	-	-	-		0.8	-	-	-
T7	0.2	2111	508	0.38	T7	0.2	2222	470	0.36
	0.4	1917	575	0.43		0.4	1895	550	0.42
	0.6	1742	634	0.48		0.6	1755	611	0.46
	0.8	1585	688	0.52		0.8	1510	726	0.55
T8	0.2	2443	554	0.53	T8	0.2	2574	509	0.48
	0.4	2264	612	0.58		0.4	2344	577	0.55
	0.6	2109	669	0.64		0.6	2128	654	0.62
	0.8	-	-	-		0.8	1856	738	0.70
T9	0.2	3440	692	1.12	T9	0.2	3639	629	1.02
	0.4	3308	734	1.19		0.4	3491	672	1.09
	0.6	3158	782	1.27		0.6	3267	768	1.24
	0.8	3012	827	1.34		0.8	3045	789	1.28
T10	0.2	3575	710	1.23	T10	0.2	3794	646	1.12
	0.4	3469	749	1.29		0.4	3620	688	1.19
	0.6	3293	798	1.38		0.6	3421	745	1.29
	0.8	3170	840	1.45		0.8	3224	800	1.38

10 Ton
130 MBH Gas Heat Exchanger
Medium Static Direct Drive
Models: DRG1203LL, DRG1204LL, DRG1207LL

Down Flow					Horizontal Flow				
Speed Tap	ESP	CFM	RPM	BHP	Speed Tap	ESP	CFM	RPM	BHP
T1	0.2	2255	553	0.42	T1	0.2	2267	492	0.37
	0.4	-	-	-		0.4	-	-	-
	0.6	-	-	-		0.6	-	-	-
	0.8	-	-	-		0.8	-	-	-
	1.0	-	-	-		1.0	-	-	-
	1.2	-	-	-		1.2	-	-	-
	1.4	-	-	-		1.4	-	-	-
T2	0.2	3293	675	1.04	T2	0.2	3464	626	0.97
	0.4	3137	725	1.12		0.4	3294	683	1.06
	0.6	3010	766	1.19		0.6	3139	730	1.13
	0.8	2781	825	1.28		0.8	2859	807	1.25
	1.0	2580	876	1.36		1.0	2544	884	1.37
	1.2	2426	913	1.41		1.2	2387	920	1.42
	1.4	2241	954	1.48		1.4	2208	963	1.49
T3	0.2	3293	675	1.04	T3	0.2	3464	626	0.97
	0.4	3137	725	1.12		0.4	3294	683	1.06
	0.6	3010	766	1.19		0.6	3139	730	1.13
	0.8	-	-	-		0.8	-	-	-
	1.0	-	-	-		1.0	-	-	-
	1.2	-	-	-		1.2	-	-	-
	1.4	-	-	-		1.4	-	-	-
T4	0.2	4426	847	2.17	T4	0.2	4671	773	1.98
	0.4	4311	880	2.25		0.4	4596	820	2.10
	0.6	4180	916	2.34		0.6	4420	854	2.19
	0.8	4102	944	2.42		0.8	4250	894	2.29
	1.0	3957	982	2.51		1.0	4119	928	2.38
	1.2	3858	1013	2.59		1.2	3987	960	2.46
	1.4	3742	1047	2.68		1.4	3873	1008	2.58
T5	0.2	4628	878	2.45	T5	0.2	4896	802	2.23
	0.4	4516	912	2.54		0.4	4771	839	2.34
	0.6	4402	945	2.63		0.6	4646	878	2.45
	0.8	4295	978	2.72		0.8	4510	915	2.55
	1.0	4186	1011	2.82		1.0	4378	950	2.65
	1.2	4076	1042	2.90		1.2	4242	992	2.76
	1.4	3969	1073	2.99		1.4	4093	1035	2.88
T6	0.2	1955	487	0.32	T6	0.2	2060	453	0.30
	0.4	1755	557	0.36		0.4	1674	537	0.36
	0.6	1567	619	0.41		0.6	1582	627	0.42
	0.8	-	-	-		0.8	1359	721	0.48
	1.0	-	-	-		1.0	-	-	-
	1.2	-	-	-		1.2	-	-	-
	1.4	-	-	-		1.4	-	-	-
T7	0.2	2628	581	0.62	T7	0.2	2741	534	0.57
	0.4	2464	636	0.68		0.4	2519	599	0.64
	0.6	2300	691	0.74		0.6	2296	665	0.71
	0.8	2136	745	0.80		0.8	2074	731	0.78
	1.0	1972	800	0.86		1.0	1852	797	0.85
	1.2	1807	855	0.92		1.2	1629	863	0.92
	1.4	1643	910	0.97		1.4	1407	929	1.00
T8	0.2	2691	588	0.65	T8	0.2	2834	538	0.59
	0.4	2523	641	0.71		0.4	2651	599	0.66
	0.6	2376	696	0.77		0.6	2405	806	0.89
	0.8	2017	782	0.86		0.8	2128	748	0.83
	1.0	-	-	-		1.0	-	-	-
	1.2	-	-	-		1.2	-	-	-
	1.4	-	-	-		1.4	-	-	-
T9	0.2	3575	710	1.23	T9	0.2	3794	646	1.12
	0.4	3469	749	1.29		0.4	3620	688	1.19
	0.6	3293	798	1.38		0.6	3421	745	1.29
	0.8	3170	840	1.45		0.8	3224	800	1.38
	1.0	3046	880	1.52		1.0	3047	854	1.47
	1.2	2786	939	1.62		1.2	2743	927	1.60
	1.4	2545	995	1.72		1.4	2406	998	1.72
T10	0.2	3848	750	1.46	T10	0.2	-	-	-
	0.4	3737	790	1.54		0.4	-	-	-
	0.6	3579	833	1.62		0.6	3752	817	1.59
	0.8	3471	872	1.70		0.8	3588	820	1.60
	1.0	3357	912	1.78		1.0	3437	871	1.70
	1.2	3145	958	1.87		1.2	3191	941	1.83
	1.4	2952	1009	1.97		1.4	2911	970	1.89

Note:

- Taps T1 and T2 are for first stage of cooling only. Taps T6 and T7 are for first stage of heating only. Refer to page 11 for speed tap selection.
- Shaded area are not recommended for cooling or heating operation.
- Airflow table includes resistance for base unit only with 2" clean air filters in place.
  Any Additional air resistance caused by factory or field installed options or accessories must be added to the ESP in order to select the correct speed tap.

APPENDIX A BLOWER PERFORMANCE TABLES

10 Ton
130 MBH Gas Heat Exchanger
High Static Direct Drive
Models: DRG1203WL, DRG1204WL, DRG1207WL

Down Flow				
Speed Tap	ESP	CFM	RPM	BHP
T1	0.2	2248	535	0.44
	0.4	-	-	-
	0.6	-	-	-
	0.8	-	-	-
	1.0	-	-	-
	1.2	-	-	-
	1.4	-	-	-
	1.6	-	-	-
	1.8	-	-	-
	2.0	-	-	-
T2	0.2	3814	761	1.35
	0.4	3709	802	1.42
	0.6	3534	839	1.49
	0.8	3399	887	1.57
	1.0	3265	919	1.63
	1.2	3012	967	1.72
	1.4	2779	1027	1.82
	1.6	2643	1042	1.85
	1.8	2509	1060	1.88
	2.0	2383	1120	1.99
T3	0.2	3814	761	1.35
	0.4	3709	802	1.42
	0.6	3534	839	1.49
	0.8	3399	887	1.57
	1.0	3265	919	1.63
	1.2	3012	967	1.72
	1.4	-	-	-
	1.6	-	-	-
	1.8	-	-	-
	2.0	-	-	-
T4	0.2	4790	914	2.55
	0.4	4674	948	2.64
	0.6	4565	982	2.74
	0.8	4440	1013	2.82
	1.0	4321	1046	2.91
	1.2	4211	1076	3.00
	1.4	4094	1104	3.08
	1.6	3988	1135	3.16
	1.8	3884	1163	3.24
	2.0	3770	1192	3.32
T5	0.2	4976	948	2.83
	0.4	4866	979	2.93
	0.6	4763	1010	3.02
	0.8	4634	1040	3.11
	1.0	4520	1071	3.20
	1.2	4408	1099	3.28
	1.4	4288	1128	3.37
	1.6	4187	1157	3.46
	1.8	4078	1182	3.53
	2.0	3976	1214	3.63

Horizontal Flow				
Speed Tap	ESP	CFM	RPM	BHP
T1	0.2	2312	493	0.40
	0.4	-	-	-
	0.6	-	-	-
	0.8	-	-	-
	1.0	-	-	-
	1.2	-	-	-
	1.4	-	-	-
	1.6	-	-	-
	1.8	-	-	-
	2.0	-	-	-
T2	0.2	3815	680	1.21
	0.4	3705	721	1.28
	0.6	3514	777	1.38
	0.8	3367	823	1.46
	1.0	3222	867	1.54
	1.2	2937	938	1.66
	1.4	2670	1004	1.78
	1.6	2522	1040	1.84
	1.8	2375	1072	1.90
	2.0	2222	1107	1.96
T3	0.2	3815	680	1.21
	0.4	3705	721	1.28
	0.6	3514	777	1.38
	0.8	3367	823	1.46
	1.0	3222	867	1.54
	1.2	-	-	-
	1.4	-	-	-
	1.6	-	-	-
	1.8	-	-	-
	2.0	-	-	-
T4	0.2	4915	830	2.31
	0.4	4789	872	2.43
	0.6	4659	905	2.52
	0.8	4533	959	2.67
	1.0	4420	980	2.73
	1.2	4278	1050	2.93
	1.4	4139	1055	2.94
	1.6	4024	1145	3.19
	1.8	3892	1125	3.13
	2.0	3778	1150	3.20
T5	0.2	-	-	-
	0.4	4972	891	2.66
	0.6	4843	925	2.76
	0.8	4720	964	2.88
	1.0	4607	1002	2.99
	1.2	4471	1036	3.09
	1.4	4338	1070	3.20
	1.6	4223	1105	3.30
	1.8	4095	1140	3.41
	2.0	3983	1170	3.50

Down Flow				
Speed Tap	ESP	CFM	RPM	BHP
T6	0.2	2306	543	0.46
	0.4	2069	595	0.50
	0.6	1774	631	0.53
	0.8	1416	649	0.55
	1.0	-	-	-
	1.2	-	-	-
	1.4	-	-	-
	1.6	-	-	-
	1.8	-	-	-
	2.0	-	-	-
T7	0.2	-	-	-
	0.4	-	-	-
	0.6	2830	761	1.05
	0.8	2693	809	1.12
	1.0	2457	864	1.19
	1.2	2219	921	1.27
	1.4	1937	970	1.34
	1.6	1778	1006	1.39
	1.8	1574	1055	1.45
	2.0	1365	1149	1.58
T8	0.2	3229	678	0.97
	0.4	3107	723	1.03
	0.6	2907	770	1.10
	0.8	2778	816	1.17
	1.0	2557	869	1.24
	1.2	2308	925	1.32
	1.4	2032	976	1.39
	1.6	-	-	-
	1.8	-	-	-
	2.0	-	-	-
T9	0.2	3706	750	1.34
	0.4	3596	786	1.40
	0.6	3413	835	1.49
	0.8	3273	874	1.56
	1.0	3132	913	1.63
	1.2	2874	973	1.74
	1.4	2641	1027	1.83
	1.6	2501	1063	1.90
	1.8	2366	1097	1.96
	2.0	2226	1129	2.02
T10	0.2	-	-	-
	0.4	3836	832	1.68
	0.6	3714	873	1.77
	0.8	3576	905	1.83
	1.0	3432	948	1.92
	1.2	3323	986	2.00
	1.4	3177	1020	2.06
	1.6	2956	1075	2.18
	1.8	2690	1127	2.28
	2.0	2560	1156	2.34

Horizontal Flow				
Speed Tap	ESP	CFM	RPM	BHP
T6	0.2	2376	500	0.42
	0.4	2175	571	0.48
	0.6	2024	657	0.56
	0.8	1884	689	0.58
	1.0	-	-	-
	1.2	-	-	-
	1.4	-	-	-
	1.6	-	-	-
	1.8	-	-	-
	2.0	-	-	-
T7	0.2	-	-	-
	0.4	-	-	-
	0.6	-	-	-
	0.8	2759	766	1.06
	1.0	2540	834	1.15
	1.2	2250	898	1.24
	1.4	1983	958	1.32
	1.6	1840	1013	1.40
	1.8	1627	1073	1.48
	2.0	1413	1132	1.56
T8	0.2	3335	613	0.87
	0.4	3188	668	0.95
	0.6	3021	720	1.03
	0.8	2855	770	1.10
	1.0	2641	836	1.19
	1.2	2345	902	1.29
	1.4	2073	963	1.38
	1.6	-	-	-
	1.8	-	-	-
	2.0	-	-	-
T9	0.2	3819	670	1.20
	0.4	3711	712	1.27
	0.6	3519	770	1.38
	0.8	3377	821	1.47
	1.0	3230	870	1.55
	1.2	2945	944	1.69
	1.4	2687	1015	1.81
	1.6	2525	1055	1.88
	1.8	2361	1089	1.94
	2.0	2232	1128	2.01
T10	0.2	-	-	-
	0.4	-	-	-
	0.6	3841	805	1.63
	0.8	3710	845	1.71
	1.0	3546	895	1.81
	1.2	3410	941	1.91
	1.4	3285	980	1.98
	1.6	3028	1045	2.12
	1.8	2732	1110	2.25
	2.0	2549	1152	2.33

Note:

- Taps T1 and T2 are for first stage of cooling only. Taps T6 and T7 are for first stage of heating only. Refer to page 11 for speed tap selection.
- Shaded area are not recommended for cooling or heating operation.
- Airflow table includes resistance for base unit only with 2" clean air filters in place.
  Any Additional air resistance caused by factory or field installed options or accessories must be added to the ESP in order to select the correct speed tap.

APPENDIX A BLOWER PERFORMANCE TABLES

10Ton
180 MBH Gas Heat Exchanger
Standard Static Direct Drive
Models: DRG1203DM, DRG1204DM, DRG1207DM

Down Flow					Horizontal Flow				
Speed Tap	ESP	CFM	RPM	BHP	Speed Tap	ESP	CFM	RPM	BHP
T1	0.2	2184	520	0.43	T1	0.2	2286	486	0.41
	0.4	-	-	-		0.4	-	-	-
	0.6	-	-	-		0.6	-	-	-
	0.8	-	-	-		0.8	-	-	-
T2	0.2	2910	654	0.78	T2	0.2	2942	562	0.67
	0.4	2702	687	0.82		0.4	2760	613	0.73
	0.6	2410	753	0.90		0.6	2431	706	0.84
	0.8	2250	792	0.94		0.8	2350	802	0.95
T3	0.2	3669	734	1.36	T3	0.2	3874	673	1.25
	0.4	3556	775	1.44		0.4	3699	713	1.32
	0.6	3428	816	1.52		0.6	3560	769	1.43
	0.8	3274	859	1.60		0.8	3438	820	1.52
T4	0.2	3940	774	1.62	T4	0.2	4159	707	1.48
	0.4	3827	812	1.70		0.4	4062	742	1.56
	0.6	3696	850	1.78		0.6	3880	794	1.66
	0.8	3571	892	1.87		0.8	3722	844	1.77
T5	0.2	4126	802	1.82	T5	0.2	4366	732	1.66
	0.4	4022	838	1.91		0.4	4177	786	1.79
	0.6	3889	877	1.99		0.6	4097	817	1.86
	0.8	3808	908	2.07		0.8	3973	854	1.94
T6	0.2	1938	485	0.31	T6	0.2	2042	451	0.30
	0.4	-	-	-		0.4	-	-	-
	0.6	-	-	-		0.6	-	-	-
	0.8	-	-	-		0.8	-	-	-
T7	0.2	2621	582	0.62	T7	0.2	2751	534	0.57
	0.4	2465	637	0.68		0.4	2525	595	0.64
	0.6	2300	690	0.74		0.6	2291	668	0.71
	0.8	2136	745	0.80		0.8	2074	731	0.78
T8	0.2	2731	593	0.67	T8	0.2	2876	543	0.61
	0.4	2564	646	0.73		0.4	2699	602	0.68
	0.6	-	-	-		0.6	2450	657	0.74
	0.8	-	-	-		0.8	-	-	-
T9	0.2	3555	708	1.21	T9	0.2	3765	643	1.10
	0.4	3428	749	1.28		0.4	3610	684	1.17
	0.6	3275	796	1.36		0.6	3402	681	1.16
	0.8	3145	838	1.43		0.8	3195	797	1.36
T10	0.2	4200	800	1.82	T10	0.2	4468	726	1.65
	0.4	4081	842	1.91		0.4	4258	766	1.74
	0.6	3956	882	2.01		0.6	4175	811	1.84
	0.8	3855	919	2.09		0.8	4056	851	1.93

10 Ton
180 MBH Gas Heat Exchanger
Medium Static Direct Drive
Models: DRG1203LM, DRG1204LM, DRG1207LM

Down Flow					Horizontal Flow				
Speed Tap	ESP	CFM	RPM	BHP	Speed Tap	ESP	CFM	RPM	BHP
T1	0.2	2184	520	0.43	T1	0.2	2286	486	0.41
	0.4	-	-	-		0.4	-	-	-
	0.6	-	-	-		0.6	-	-	-
	0.8	-	-	-		0.8	-	-	-
	1.0	-	-	-		1.0	-	-	-
	1.2	-	-	-		1.2	-	-	-
	1.4	-	-	-		1.4	-	-	-
T2	0.2	3293	675	1.04	T2	0.2	3464	626	0.97
	0.4	3137	725	1.12		0.4	3294	683	1.06
	0.6	3010	766	1.19		0.6	3139	730	1.13
	0.8	2781	825	1.28		0.8	2859	807	1.25
	1.0	2580	876	1.36		1.0	2544	884	1.37
	1.2	2426	913	1.41		1.2	2387	920	1.42
	1.4	2241	954	1.48		1.4	2208	963	1.49
T3	0.2	3669	734	1.36	T3	0.2	3874	673	1.25
	0.4	3556	775	1.44		0.4	3699	713	1.32
	0.6	3428	816	1.52		0.6	3560	769	1.43
	0.8	3274	859	1.60		0.8	3438	820	1.52
	1.0	3171	892	1.66		1.0	3243	870	1.62
	1.2	-	-	-		1.2	-	-	-
	1.4	-	-	-		1.4	-	-	-
T4	0.2	4426	847	2.17	T4	0.2	4671	773	1.98
	0.4	4311	880	2.25		0.4	4596	820	2.10
	0.6	4180	916	2.34		0.6	4420	854	2.19
	0.8	4102	944	2.42		0.8	4250	894	2.29
	1.0	3957	982	2.51		1.0	4119	928	2.38
	1.2	3858	1013	2.59		1.2	3987	960	2.46
	1.4	3742	1047	2.68		1.4	3873	1008	2.58
T5	0.2	4628	878	2.45	T5	0.2	4896	802	2.23
	0.4	4516	912	2.54		0.4	4771	839	2.34
	0.6	4402	945	2.63		0.6	4646	878	2.45
	0.8	4295	978	2.72		0.8	4510	915	2.55
	1.0	4186	1011	2.82		1.0	4378	950	2.65
	1.2	4076	1042	2.90		1.2	4242	992	2.76
	1.4	3969	1073	2.99		1.4	4093	1035	2.88
T6	0.2	2516	564	0.56	T6	0.2	2648	517	0.51
	0.4	2340	621	0.62		0.4	2434	583	0.58
	0.6	2188	677	0.67		0.6	2208	647	0.64
	0.8	-	-	-		0.8	1933	741	0.74
	1.0	-	-	-		1.0	-	-	-
	1.2	-	-	-		1.2	-	-	-
	1.4	-	-	-		1.4	-	-	-
T7	0.2	3329	682	1.08	T7	0.2	3582	622	0.98
	0.4	3186	728	1.15		0.4	3436	666	1.05
	0.6	3056	770	1.22		0.6	3206	812	1.28
	0.8	2852	823	1.30		0.8	2978	785	1.24
	1.0	2679	876	1.38		1.0	2769	842	1.33
	1.2	2500	911	1.44		1.2	2454	913	1.44
	1.4	2290	959	1.51		1.4	2144	957	1.51
T8	0.2	4018	786	1.70	T8	0.2	4359	712	1.54
	0.4	3911	823	1.78		0.4	4170	749	1.62
	0.6	3776	862	1.87		0.6	4044	821	1.78
	0.8	3674	899	1.95		0.8	3910	842	1.82
	1.0	3529	973	2.1		1.0	3732	890	1.93
	1.2	3391	975	2.11		1.2	3574	945	2.0
	1.4	3222	1014	2.20		1.4	3379	977	2.1
T9	0.2	4343	835	2.07	T9	0.2	4707	754	1.87
	0.4	4237	869	2.16		0.4	4534	792	1.97
	0.6	4109	905	2.25		0.6	4425	828	2.05
	0.8	4022	938	2.33		0.8	4306	877	2.18
	1.0	3530	973	2.41		1.0	4102	919	2.28
	1.2	3771	1008	2.50		1.2	4026	954	2.37
	1.4	3639	1038	2.57		1.4	3925	995	2.47
T10	0.2	4628	878	2.45	T10	0.2	5018	794	2.21
	0.4	4516	912	2.54		0.4	4884	834	2.32
	0.6	4402	945	2.63		0.6	4750	875	2.44
	0.8	4295	978	2.72		0.8	4613	912	2.54
	1.0	4186	1011	2.82		1.0	4481	950	2.65
	1.2	4076	1042	2.90		1.2	4339	990	2.76
	1.4	3969	1073	2.99		1.4	4187	1030	2.87

Note:

- Taps T1 and T2 are for first stage of cooling only. Taps T6 and T7 are for first stage of heating only. Refer to page 11 for speed tap selection.
- Shaded area are not recommended for cooling or heating operation.
- Airflow table includes resistance for base unit only with 2" clean air filters in place.
  Any Additional air resistance caused by factory or field installed options or accessories must be added to the ESP in order to select the correct speed tap.

APPENDIX A BLOWER PERFORMANCE TABLES

10 Ton
180 MBH Gas Heat Exchanger
High Static Direct Drive
Models: DRG1203WM, DRG1204WM, DRG1207WM

Down Flow				
Speed Tap	ESP	CFM	RPM	BHP
T1	0.2	2248	535	0.44
	0.4	-	-	-
	0.6	-	-	-
	0.8	-	-	-
	1.0	-	-	-
	1.2	-	-	-
	1.4	-	-	-
	1.6	-	-	-
	1.8	-	-	-
	2.0	-	-	-
T2	0.2	3814	761	1.35
	0.4	3709	802	1.42
	0.6	3534	839	1.49
	0.8	3399	887	1.57
	1.0	3265	919	1.63
	1.2	3012	967	1.72
	1.4	2779	1027	1.82
	1.6	2643	1042	1.85
	1.8	2509	1060	1.88
	2.0	2383	1120	1.99
T3	0.2	3814	761	1.35
	0.4	3709	802	1.42
	0.6	3534	839	1.49
	0.8	3399	887	1.57
	1.0	3265	919	1.63
	1.2	3012	967	1.72
	1.4	-	-	-
	1.6	-	-	-
	1.8	-	-	-
	2.0	-	-	-
T4	0.2	4790	914	2.55
	0.4	4674	948	2.64
	0.6	4565	982	2.74
	0.8	4440	1013	2.82
	1.0	4321	1046	2.91
	1.2	4211	1076	3.00
	1.4	4094	1104	3.08
	1.6	3988	1135	3.16
	1.8	3884	1163	3.24
	2.0	3770	1192	3.32
T5	0.2	4976	948	2.83
	0.4	4866	979	2.93
	0.6	4763	1010	3.02
	0.8	4634	1040	3.11
	1.0	4520	1071	3.20
	1.2	4408	1099	3.28
	1.4	4288	1128	3.37
	1.6	4187	1157	3.46
	1.8	4078	1182	3.53
	2.0	3976	1214	3.63

Horizontal Flow				
Speed Tap	ESP	CFM	RPM	BHP
T1	0.2	2312	493	0.40
	0.4	-	-	-
	0.6	-	-	-
	0.8	-	-	-
	1.0	-	-	-
	1.2	-	-	-
	1.4	-	-	-
	1.6	-	-	-
	1.8	-	-	-
	2.0	-	-	-
T2	0.2	3815	680	1.21
	0.4	3705	721	1.28
	0.6	3514	777	1.38
	0.8	3367	823	1.46
	1.0	3222	867	1.54
	1.2	2937	938	1.66
	1.4	2670	1004	1.78
	1.6	2522	1040	1.84
	1.8	2375	1072	1.90
	2.0	2222	1107	1.96
T3	0.2	3815	680	1.21
	0.4	3705	721	1.28
	0.6	3514	777	1.38
	0.8	3367	823	1.46
	1.0	3222	867	1.54
	1.2	-	-	-
	1.4	-	-	-
	1.6	-	-	-
	1.8	-	-	-
	2.0	-	-	-
T4	0.2	4915	830	2.31
	0.4	4789	872	2.43
	0.6	4659	905	2.52
	0.8	4533	959	2.67
	1.0	4420	980	2.73
	1.2	4278	1050	2.93
	1.4	4139	1055	2.94
	1.6	4024	1145	3.19
	1.8	3892	1125	3.13
	2.0	3778	1150	3.20
T5	0.2	-	-	-
	0.4	4972	891	2.66
	0.6	4843	925	2.76
	0.8	4720	964	2.88
	1.0	4607	1002	2.99
	1.2	4471	1036	3.09
	1.4	4338	1070	3.20
	1.6	4223	1105	3.30
	1.8	4095	1140	3.41
	2.0	3983	1170	3.50

Down Flow				
Speed Tap	ESP	CFM	RPM	BHP
T6	0.2	3493	718	1.16
	0.4	3374	758	1.23
	0.6	3189	805	1.30
	0.8	3053	847	1.37
	1.0	2899	890	1.44
	1.2	2628	949	1.54
	1.4	2393	1001	1.62
	1.6	2242	1050	1.70
	1.8	2059	1094	1.77
	2.0	1897	1131	1.83
T7	0.2	4026	791	1.57
	0.4	3913	831	1.65
	0.6	3757	870	1.73
	0.8	3628	912	1.81
	1.0	3496	946	1.88
	1.2	3294	988	1.96
	1.4	3104	1037	2.06
	1.6	2975	1060	2.11
	1.8	2855	1083	2.15
	2.0	2725	1130	2.25
T8	0.2	4384	845	1.99
	0.4	4265	884	2.08
	0.6	4134	922	2.17
	0.8	4010	958	2.26
	1.0	3884	992	2.34
	1.2	3744	1027	2.42
	1.4	3604	1062	2.50
	1.6	3486	1092	2.57
	1.8	3381	1121	2.64
	2.0	3252	1154	2.72
T9	0.2	4973	947	3.02
	0.4	4862	978	3.12
	0.6	4760	1010	3.22
	0.8	4629	1039	3.31
	1.0	4509	1067	3.40
	1.2	4402	1098	3.50
	1.4	4287	1128	3.60
	1.6	4181	1156	3.69
	1.8	4069	1184	3.78
	2.0	3972	1214	3.87
T10	0.2	-	-	-
	0.4	5379	1069	4.11
	0.6	5276	1093	4.20
	0.8	5157	1107	4.26
	1.0	5049	1140	4.38
	1.2	4938	1164	4.47
	1.4	4824	1190	4.57
	1.6	4720	1219	4.68
	1.8	4609	1246	4.79
	2.0	4509	1273	4.89

Horizontal Flow				
Speed Tap	ESP	CFM	RPM	BHP
T6	0.2	3603	644	1.04
	0.4	3478	693	1.12
	0.6	3301	750	1.21
	0.8	3171	791	1.28
	1.0	2993	853	1.38
	1.2	2691	919	1.49
	1.4	2418	988	1.60
	1.6	2278	1035	1.68
	1.8	2123	1070	1.73
	2.0	1933	1128	1.83
T7	0.2	-	-	-
	0.4	3920	745	1.48
	0.6	3770	792	1.57
	0.8	3640	844	1.68
	1.0	3485	889	1.77
	1.2	3319	948	1.88
	1.4	3206	1000	1.99
	1.6	2907	1053	2.09
	1.8	2667	1104	2.19
	2.0	2502	1138	2.26
T8	0.2	4497	759	1.79
	0.4	4356	804	1.89
	0.6	4237	845	1.99
	0.8	4115	889	2.09
	1.0	3977	930	2.19
	1.2	3878	975	2.30
	1.4	3717	1015	2.39
	1.6	3536	1071	2.52
	1.8	3290	1117	2.63
	2.0	3024	1165	2.74
T9	0.2	5130	839	2.60
	0.4	5013	884	2.74
	0.6	4877	916	2.84
	0.8	4774	956	2.96
	1.0	4665	991	3.07
	1.2	4527	1030	3.19
	1.4	4462	1073	3.33
	1.6	4301	1108	3.43
	1.8	4187	1154	3.58
	2.0	4105	1128	3.50
T10	0.2	-	-	-
	0.4	-	-	-
	0.6	-	-	-
	0.8	5281	1019	3.92
	1.0	5155	1049	4.03
	1.2	5040	1083	4.16
	1.4	4940	1117	4.29
	1.6	4800	1148	4.41
	1.8	4678	1188	4.57
	2.0	4557	1209	4.65

Note:

- Taps T1 and T2 are for first stage of cooling only. Taps T6 and T7 are for first stage of heating only. Refer to page 11 for speed tap selection.
- Shaded area are not recommended for cooling or heating operation.
- Airflow table includes resistance for base unit only with 2" clean air filters in place.
  Any Additional air resistance caused by factory or field installed options or accessories must be added to the ESP in order to select the correct speed tap.

APPENDIX A BLOWER PERFORMANCE TABLES

10 Ton
240 MBH Gas Heat Exchanger
Standard Static Direct Drive
Models: DRG1203DH, DRG1204DH, DRG1207DH

Down Flow					Horizontal Flow				
Speed Tap	ESP	CFM	RPM	BHP	Speed Tap	ESP	CFM	RPM	BHP
T1	0.2	2184	520	0.43	T1	0.2	2286	486	0.41
	0.4	-	-	-		0.4	-	-	-
	0.6	-	-	-		0.6	-	-	-
	0.8	-	-	-		0.8	-	-	-
T2	0.2	2910	654	0.78	T2	0.2	2942	562	0.67
	0.4	2702	687	0.82		0.4	2760	613	0.73
	0.6	2410	753	0.90		0.6	2431	706	0.84
	0.8	2250	792	0.94		0.8	2317	733	0.87
T3	0.2	3669	734	1.36	T3	0.2	3874	673	1.25
	0.4	3556	775	1.44		0.4	3699	713	1.32
	0.6	3428	816	1.52		0.6	3560	769	1.43
	0.8	3274	859	1.60		0.8	3438	820	1.52
T4	0.2	3940	774	1.62	T4	0.2	4159	707	1.48
	0.4	3827	812	1.70		0.4	4062	742	1.56
	0.6	3696	850	1.78		0.6	3880	794	1.66
	0.8	3571	892	1.87		0.8	3722	844	1.77
T5	0.2	4126	802	1.82	T5	0.2	4366	732	1.66
	0.4	4022	838	1.91		0.4	4177	786	1.79
	0.6	3889	877	1.99		0.6	4097	817	1.86
	0.8	3808	908	2.07		0.8	3973	854	1.94
T6	0.2	2223	524	0.43	T6	0.2	2340	483	0.40
	0.4	-	-	-		0.4	-	-	-
	0.6	-	-	-		0.6	-	-	-
	0.8	-	-	-		0.8	-	-	-
T7	0.2	3023	634	0.84	T7	0.2	3187	577	0.76
	0.4	2870	681	0.90		0.4	3038	629	0.83
	0.6	2725	733	0.97		0.6	2783	664	0.88
	0.8	2486	795	1.05		0.8	2519	764	1.01
T8	0.2	3720	732	1.35	T8	0.2	3947	664	1.22
	0.4	3602	772	1.42		0.4	3781	703	1.29
	0.6	3446	817	1.50		0.6	3599	816	1.50
	0.8	3331	857	1.58		0.8	3416	1002	1.84
T9	0.2	3979	769	1.59	T9	0.2	4237	698	1.44
	0.4	3875	809	1.67		0.4	4053	734	1.52
	0.6	3717	850	1.76		0.6	3912	819	1.69
	0.8	3611	890	1.84		0.8	3765	831	1.72
T10	0.2	4200	800	1.82	T10	0.2	4468	726	1.65
	0.4	4081	842	1.91		0.4	4258	766	1.74
	0.6	3956	882	2.01		0.6	4175	811	1.84
	0.8	3855	919	2.09		0.8	4056	851	1.93

10 Ton
240 MBH Gas Heat Exchanger
Medium Static Direct Drive
Models: DRG1203LH, DRG1204LH, DRG1207LH

Down Flow					Horizontal Flow				
Speed Tap	ESP	CFM	RPM	BHP	Speed Tap	ESP	CFM	RPM	BHP
T1	0.2	2184	520	0.43	T1	0.2	2286	486	0.41
	0.4	-	-	-		0.4	-	-	-
	0.6	-	-	-		0.6	-	-	-
	0.8	-	-	-		0.8	-	-	-
	1.0	-	-	-		1.0	-	-	-
	1.2	-	-	-		1.2	-	-	-
	1.4	-	-	-		1.4	-	-	-
T2	0.2	3293	675	1.04	T2	0.2	3464	626	0.97
	0.4	3137	725	1.12		0.4	3294	683	1.06
	0.6	3010	766	1.19		0.6	3139	730	1.13
	0.8	2781	825	1.28		0.8	2859	807	1.25
	1.0	2580	876	1.36		1.0	2544	884	1.37
	1.2	2426	913	1.41		1.2	2387	920	1.42
	1.4	2241	954	1.48		1.4	2208	963	1.49
T3	0.2	3669	734	1.36	T3	0.2	3874	673	1.25
	0.4	3556	775	1.44		0.4	3699	713	1.32
	0.6	3428	816	1.52		0.6	3560	769	1.43
	0.8	3274	859	1.60		0.8	3438	820	1.52
	1.0	3171	892	1.66		1.0	3243	870	1.62
	1.2	-	-	-		1.2	-	-	-
	1.4	-	-	-		1.4	-	-	-
T4	0.2	4426	847	2.17	T4	0.2	4671	773	1.98
	0.4	4311	880	2.25		0.4	4596	820	2.10
	0.6	4180	916	2.34		0.6	4420	854	2.19
	0.8	4102	944	2.42		0.8	4250	894	2.29
	1.0	3957	982	2.51		1.0	4119	928	2.38
	1.2	3858	1013	2.59		1.2	3987	960	2.46
	1.4	3742	1047	2.68		1.4	3873	1008	2.58
T5	0.2	4628	878	2.45	T5	0.2	4896	802	2.23
	0.4	4516	912	2.54		0.4	4771	839	2.34
	0.6	4402	945	2.63		0.6	4646	878	2.45
	0.8	4295	978	2.72		0.8	4510	915	2.55
	1.0	4186	1011	2.82		1.0	4378	950	2.65
	1.2	4076	1042	2.90		1.2	4242	992	2.76
	1.4	3969	1073	2.99		1.4	4093	1035	2.88
T6	0.2	2827	607	0.73	T6	0.2	2978	554	0.66
	0.4	2665	658	0.79		0.4	2813	611	0.73
	0.6	2520	711	0.85		0.6	2559	849	1.01
	0.8	-	-	-		0.8	2285	754	0.90
	1.0	-	-	-		1.0	-	-	-
	1.2	-	-	-		1.2	-	-	-
	1.4	-	-	-		1.4	-	-	-
T7	0.2	3558	709	1.21	T7	0.2	3768	643	1.10
	0.4	3431	750	1.28		0.4	3613	684	1.17
	0.6	3279	796	1.36		0.6	3406	701	1.20
	0.8	3149	839	1.43		0.8	3199	797	1.36
	1.0	3016	880	1.50		1.0	3035	852	1.46
	1.2	2761	934	1.60		1.2	2723	928	1.59
	1.4	2527	991	1.69		1.4	2396	962	1.64
T8	0.2	4151	794	1.77	T8	0.2	4433	721	1.61
	0.4	4057	834	1.86		0.4	4243	757	1.69
	0.6	3904	874	1.95		0.6	4125	822	1.83
	0.8	3795	914	2.04		0.8	3997	849	1.89
	1.0	3678	951	2.1		1.0	3809	896	2.00
	1.2	3551	984	2.19		1.2	3675	946	2.1
	1.4	3421	1024	2.28		1.4	3505	980	2.2
T9	0.2	4414	832	2.11	T9	0.2	4741	758	1.91
	0.4	4338	877	2.20		0.4	4572	797	2.00
	0.6	4206	912	2.29		0.6	4461	828	2.08
	0.8	4092	952	2.39		0.8	4341	881	2.21
	1.0	3969	988	2.48		1.0	4140	922	2.32
	1.2	3895	1012	2.54		1.2	4065	956	2.40
	1.4	3803	1044	2.62		1.4	3966	998	2.51
T10	0.2	4726	877	2.44	T10	0.2	5018	794	2.21
	0.4	4606	914	2.55		0.4	4884	834	2.32
	0.6	4488	948	2.64		0.6	4750	875	2.44
	0.8	4382	980	2.73		0.8	4613	912	2.54
	1.0	4264	1017	2.83		1.0	4481	950	2.65
	1.2	4158	1046	2.91		1.2	4339	990	2.76
	1.4	4051	1080	3.01		1.4	4187	1030	2.87

Note:

- Taps T1 and T2 are for first stage of cooling only. Taps T6 and T7 are for first stage of heating only. Refer to page 11 for speed tap selection.
- Shaded area are not recommended for cooling or heating operation.
- Airflow table includes resistance for base unit only with 2" clean air filters in place.
  Any Additional air resistance caused by factory or field installed options or accessories must be added to the ESP in order to select the correct speed tap.

APPENDIX A BLOWER PERFORMANCE TABLES

10 Ton
240 MBH Gas Heat Exchanger
High Static Direct Drive
Models: DRG1203WH, DRG1204WH, DRG1207WH

Down Flow				
Speed Tap	ESP	CFM	RPM	BHP
T1	0.2	2248	535	0.44
	0.4	-	-	-
	0.6	-	-	-
	0.8	-	-	-
	1.0	-	-	-
	1.2	-	-	-
	1.4	-	-	-
	1.6	-	-	-
	1.8	-	-	-
	2.0	-	-	-
T2	0.2	3814	761	1.35
	0.4	3709	802	1.42
	0.6	3534	839	1.49
	0.8	3399	887	1.57
	1.0	3265	919	1.63
	1.2	3012	967	1.72
	1.4	2779	1027	1.82
	1.6	2643	1042	1.85
	1.8	2509	1060	1.88
	2.0	2383	1120	1.99
T3	0.2	3814	761	1.35
	0.4	3709	802	1.42
	0.6	3534	839	1.49
	0.8	3399	887	1.57
	1.0	3265	919	1.63
	1.2	3012	967	1.72
	1.4	-	-	-
	1.6	-	-	-
	1.8	-	-	-
	2.0	-	-	-
T4	0.2	4790	914	2.55
	0.4	4674	948	2.64
	0.6	4565	982	2.74
	0.8	4440	1013	2.82
	1.0	4321	1046	2.91
	1.2	4211	1076	3.00
	1.4	4094	1104	3.08
	1.6	3988	1135	3.16
	1.8	3884	1163	3.24
	2.0	3770	1192	3.32
T5	0.2	4976	948	2.83
	0.4	4866	979	2.93
	0.6	4763	1010	3.02
	0.8	4634	1040	3.11
	1.0	4520	1071	3.20
	1.2	4408	1099	3.28
	1.4	4288	1128	3.37
	1.6	4187	1157	3.46
	1.8	4078	1182	3.53
	2.0	3976	1214	3.63

Horizontal Flow				
Speed Tap	ESP	CFM	RPM	BHP
T1	0.2	2312	493	0.40
	0.4	-	-	-
	0.6	-	-	-
	0.8	-	-	-
	1.0	-	-	-
	1.2	-	-	-
	1.4	-	-	-
	1.6	-	-	-
	1.8	-	-	-
	2.0	-	-	-
T2	0.2	3815	680	1.21
	0.4	3705	721	1.28
	0.6	3514	777	1.38
	0.8	3367	823	1.46
	1.0	3222	867	1.54
	1.2	2937	938	1.66
	1.4	2670	1004	1.78
	1.6	2522	1040	1.84
	1.8	2375	1072	1.90
	2.0	2222	1107	1.96
T3	0.2	3815	680	1.21
	0.4	3705	721	1.28
	0.6	3514	777	1.38
	0.8	3367	823	1.46
	1.0	3222	867	1.54
	1.2	-	-	-
	1.4	-	-	-
	1.6	-	-	-
	1.8	-	-	-
	2.0	-	-	-
T4	0.2	4915	830	2.31
	0.4	4789	872	2.43
	0.6	4659	905	2.52
	0.8	4533	959	2.67
	1.0	4420	980	2.73
	1.2	4278	1050	2.93
	1.4	4139	1055	2.94
	1.6	4024	1145	3.19
	1.8	3892	1125	3.13
	2.0	3778	1150	3.20
T5	0.2	-	-	-
	0.4	4972	891	2.66
	0.6	4843	925	2.76
	0.8	4720	964	2.88
	1.0	4607	1002	2.99
	1.2	4471	1036	3.09
	1.4	4338	1070	3.20
	1.6	4223	1105	3.30
	1.8	4095	1140	3.41
	2.0	3983	1170	3.50

Down Flow				
Speed Tap	ESP	CFM	RPM	BHP
T6	0.2	3158	668	0.92
	0.4	3033	713	0.98
	0.6	2830	761	1.05
	0.8	2693	809	1.12
	1.0	2457	864	1.19
	1.2	-	-	-
	1.4	-	-	-
	1.6	-	-	-
	1.8	-	-	-
	2.0	-	-	-
T7	0.2	3926	777	1.46
	0.4	3816	817	1.54
	0.6	3651	855	1.61
	0.8	3520	900	1.70
	1.0	3387	933	1.76
	1.2	3162	978	1.84
	1.4	2953	1032	1.95
	1.6	2820	1051	1.98
	1.8	2694	1072	2.02
	2.0	2566	1125	2.12
T8	0.2	4420	851	2.04
	0.4	4301	890	2.13
	0.6	4173	927	2.22
	0.8	4049	963	2.30
	1.0	3923	997	2.39
	1.2	3788	1032	2.47
	1.4	3652	1066	2.55
	1.6	3535	1096	2.62
	1.8	3430	1125	2.69
	2.0	3302	1157	2.77
T9	0.2	4973	947	3.02
	0.4	4862	978	3.12
	0.6	4760	1010	3.22
	0.8	4629	1039	3.31
	1.0	4509	1067	3.40
	1.2	4402	1098	3.50
	1.4	4287	1128	3.60
	1.6	4181	1156	3.69
	1.8	4069	1184	3.78
	2.0	3972	1214	3.87
T10	0.2	5486	1024	3.94
	0.4	5379	1069	4.11
	0.6	5276	1093	4.20
	0.8	5157	1107	4.26
	1.0	5049	1140	4.38
	1.2	4938	1164	4.47
	1.4	4824	1190	4.57
	1.6	4720	1219	4.68
	1.8	4609	1246	4.79
	2.0	4509	1273	4.89

Horizontal Flow				
Speed Tap	ESP	CFM	RPM	BHP
T6	0.2	3265	605	0.83
	0.4	3112	661	0.91
	0.6	2944	713	0.98
	0.8	2759	766	1.06
	1.0	2540	834	1.15
	1.2	2250	898	1.24
	1.4	-	-	-
	1.6	-	-	-
	1.8	-	-	-
	2.0	-	-	-
T7	0.2	3932	685	1.29
	0.4	3813	730	1.38
	0.6	3645	782	1.47
	0.8	3511	829	1.56
	1.0	3357	879	1.66
	1.2	3137	941	1.77
	1.4	2982	998	1.88
	1.6	2729	1048	1.98
	1.8	2521	1095	2.07
	2.0	2372	1127	2.13
T8	0.2	4542	765	1.83
	0.4	4402	809	1.94
	0.6	4283	851	2.04
	0.8	4162	893	2.14
	1.0	4027	934	2.24
	1.2	3927	977	2.34
	1.4	3761	1017	2.43
	1.6	3596	1073	2.57
	1.8	3376	1110	2.66
	2.0	3089	1165	2.79
T9	0.2	5135	840	2.62
	0.4	5018	884	2.76
	0.6	4882	916	2.86
	0.8	4780	957	2.99
	1.0	4670	992	3.09
	1.2	4535	1031	3.22
	1.4	4464	1075	3.35
	1.6	4305	1109	3.46
	1.8	4188	1154	3.60
	2.0	4102	1128	3.52
T10	0.2	5656	926	3.56
	0.4	5524	956	3.67
	0.6	5386	985	3.78
	0.8	5281	1019	3.92
	1.0	5155	1049	4.03
	1.2	5040	1083	4.16
	1.4	4940	1117	4.29
	1.6	4800	1148	4.41
	1.8	4678	1188	4.57
	2.0	4557	1209	4.65

Note:

- Taps T1 and T2 are for first stage of cooling only. Taps T6 and T7 are for first stage of heating only. Refer to page 11 for speed tap selection.
- Shaded area are not recommended for cooling or heating operation.
- Airflow table includes resistance for base unit only with 2" clean air filters in place.
  Any Additional air resistance caused by factory or field installed options or accessories must be added to the ESP in order to select the correct speed tap.

APPENDIX A BLOWER PERFORMANCE TABLES

12.5 Ton
130 MBH Gas Heat Exchanger
Standard Static Direct Drive
Models: DRG1503DL, DRG1504DL, DRG1507DL

Down Flow					Horizontal Flow				
Speed Tap	ESP	CFM	RPM	BHP	Speed Tap	ESP	CFM	RPM	BHP
T1	0.2	2377	559	0.52	T1	0.2	2478	525	0.49
	0.4	-	-	-		0.4	-	-	-
	0.6	-	-	-		0.6	-	-	-
	0.8	-	-	-		0.8	-	-	-
T2	0.2	3178	662	0.93	T2	0.2	3261	616	0.87
	0.4	3007	705	0.99		0.4	3134	667	0.94
	0.6	2856	751	1.05		0.6	3011	717	1.01
	0.8	2533	822	1.16		0.8	2786	779	1.09
T3	0.2	3944	784	1.59	T3	0.2	4019	720	1.46
	0.4	3783	823	1.67		0.4	3926	756	1.53
	0.6	-	-	-		0.6	3807	805	1.63
	0.8	-	-	-		0.8	-	-	-
T4	0.2	4435	842	2.08	T4	0.2	4484	786	1.95
	0.4	4287	886	2.19		0.4	4364	830	2.05
	0.6	4153	922	2.28		0.6	4287	863	2.14
	0.8	4025	952	2.36		0.8	4194	899	2.23
T5	0.2	4719	897	2.50	T5	0.2	4777	830	2.31
	0.4	4587	929	2.59		0.4	4680	865	2.41
	0.6	4458	962	2.68		0.6	4581	901	2.51
	0.8	4329	993	2.77		0.8	4485	934	2.60
T6	0.2	1828	480	0.30	T6	0.2	1946	462	0.29
	0.4	1418	565	0.35		0.4	1869	607	0.38
	0.6	-	-	-		0.6	-	-	-
	0.8	-	-	-		0.8	-	-	-
T7	0.2	2150	527	0.42	T7	0.2	2256	499	0.40
	0.4	1867	601	0.48		0.4	1980	532	0.43
	0.6	1628	666	0.53		0.6	1756	654	0.52
	0.8	1400	724	0.58		0.8	1432	725	0.58
T8	0.2	2454	570	0.56	T8	0.2	2552	534	0.52
	0.4	2253	635	0.62		0.4	2287	549	0.54
	0.6	2022	698	0.68		0.6	2199	672	0.65
	0.8	-	-	-		0.8	1853	746	0.73
T9	0.2	2634	596	0.64	T9	0.2	2728	556	0.60
	0.4	2464	655	0.71		0.4	2519	587	0.63
	0.6	2245	716	0.77		0.6	2428	683	0.74
	0.8	1963	785	0.85		0.8	2154	755	0.82
T10	0.2	2801	625	0.74	T10	0.2	2900	577	0.69
	0.4	2646	676	0.81		0.4	2744	638	0.76
	0.6	2488	730	0.87		0.6	2586	702	0.84
	0.8	2145	805	0.96		0.8	2435	756	0.90

12.5 Ton
130 MBH Gas Heat Exchanger
Medium Static Direct Drive
Models: DRG1503LL, DRG1504LL, DRG1507LL

Down Flow					Horizontal Flow				
Speed Tap	ESP	CFM	RPM	BHP	Speed Tap	ESP	CFM	RPM	BHP
T1	0.2	2377	559	0.52	T1	0.2	2478	525	0.49
	0.4	-	-	-		0.4	-	-	-
	0.6	-	-	-		0.6	-	-	-
	0.8	-	-	-		0.8	-	-	-
	1.0	-	-	-		1.0	-	-	-
	1.2	-	-	-		1.2	-	-	-
	1.4	-	-	-		1.4	-	-	-
T2	0.2	3655	740	1.32	T2	0.2	3743	682	1.22
	0.4	3495	782	1.40		0.4	3661	715	1.28
	0.6	3361	820	1.46		0.6	3519	772	1.38
	0.8	3231	857	1.53		0.8	3457	814	1.45
	1.0	2967	915	1.63		1.0	3294	858	1.53
	1.2	2685	969	1.73		1.2	3051	924	1.65
	1.4	2550	1001	1.79		1.4	2667	995	1.78
T3	0.2	3944	784	1.59	T3	0.2	4019	720	1.46
	0.4	3783	823	1.67		0.4	3926	756	1.53
	0.6	-	-	-		0.6	3807	805	1.63
	0.8	-	-	-		0.8	-	-	-
	1.0	-	-	-		1.0	-	-	-
	1.2	-	-	-		1.2	-	-	-
	1.4	-	-	-		1.4	-	-	-
T4	0.2	4536	878	2.30	T4	0.2	4609	807	2.11
	0.4	4407	910	2.38		0.4	4517	843	2.21
	0.6	4304	939	2.46		0.6	4424	882	2.31
	0.8	4176	974	2.55		0.8	4323	915	2.40
	1.0	4066	1004	2.63		1.0	4216	951	2.49
	1.2	3946	1036	2.71		1.2	4115	989	2.59
	1.4	3826	1067	2.79		1.4	4010	1025	2.68
T5	0.2	4719	897	2.50	T5	0.2	4777	830	2.31
	0.4	4587	929	2.59		0.4	4680	865	2.41
	0.6	4458	962	2.68		0.6	4581	901	2.51
	0.8	4329	993	2.77		0.8	4485	934	2.60
	1.0	4211	1025	2.86		1.0	4387	970	2.70
	1.2	4087	1057	2.94		1.2	4285	1005	2.80
	1.4	3975	1087	3.03		1.4	4184	1039	2.89
T6	0.2	2072	515	0.39	T6	0.2	2181	490	0.37
	0.4	1763	592	0.45		0.4	1930	540	0.41
	0.6	1524	658	0.50		0.6	1632	649	0.49
	0.8	-	-	-		0.8	1355	719	0.54
	1.0	-	-	-		1.0	-	-	-
	1.2	-	-	-		1.2	-	-	-
	1.4	-	-	-		1.4	-	-	-
T7	0.2	2712	607	0.69	T7	0.2	2806	565	0.64
	0.4	2553	665	0.75		0.4	2623	608	0.69
	0.6	2339	724	0.82		0.6	2520	688	0.78
	0.8	2056	793	0.90		0.8	2285	758	0.86
	1.0	1860	839	0.95		1.0	2051	818	0.93
	1.2	1712	895	1.01		1.2	1803	886	1.00
	1.4	1479	904	1.02		1.4	1651	957	1.08
T8	0.2	2940	640	0.82	T8	0.2	3033	593	0.76
	0.4	2797	691	0.88		0.4	2898	651	0.83
	0.6	2603	746	0.95		0.6	2749	702	0.90
	0.8	2325	813	1.04		0.8	2619	766	0.98
	1.0	2109	864	1.1		1.0	2313	815	1.04
	1.2	1975	914	1.17		1.2	2042	873	1.1
	1.4	1797	944	1.21		1.4	1798	909	1.2
T9	0.2	3281	688	1.04	T9	0.2	3379	636	0.96
	0.4	3136	733	1.11		0.4	3177	687	1.04
	0.6	2976	779	1.18		0.6	3045	725	1.10
	0.8	2731	838	1.27		0.8	2914	782	1.19
	1.0	2505	892	1.35		1.0	2687	819	1.24
	1.2	2356	933	1.41		1.2	2461	867	1.31
	1.4	2107	944	1.43		1.4	2235	933	1.41
T10	0.2	3586	732	1.28	T10	0.2	3697	677	1.19
	0.4	3419	772	1.35		0.4	3487	722	1.27
	0.6	3288	811	1.42		0.6	3346	758	1.33
	0.8	3089	858	1.50		0.8	3228	812	1.42
	1.0	2878	909	1.59		1.0	3136	862	1.51
	1.2	2754	948	1.66		1.2	2969	911	1.60
	1.4	2404	1009	1.77		1.4	2739	979	1.72

Note:

- Taps T1 and T2 are for first stage of cooling only. Taps T6 and T7 are for first stage of heating only. Refer to page 11 for speed tap selection.
- Shaded area are not recommended for cooling or heating operation.
- Airflow table includes resistance for base unit only with 2" clean air filters in place.
  Any Additional air resistance caused by factory or field installed options or accessories must be added to the ESP in order to select the correct speed tap.

APPENDIX A BLOWER PERFORMANCE TABLES

12.5 Ton
130 MBH Gas Heat Exchanger
High Static Direct Drive
Models: DRG1503WL, DRG1504WL, DRG1507WL

Down Flow				
Speed Tap	ESP	CFM	RPM	BHP
T1	0.2	2511	639	0.63
	0.4	-	-	-
	0.6	-	-	-
	0.8	-	-	-
	1.0	-	-	-
	1.2	-	-	-
	1.4	-	-	-
	1.6	-	-	-
	1.8	-	-	-
	2.0	-	-	-
T2	0.2	3737	894	1.97
	0.4	3699	919	2.03
	0.6	3604	952	2.10
	0.8	3476	990	2.18
	1.0	3276	1035	2.28
	1.2	3052	1082	2.38
	1.4	2890	1120	2.47
	1.6	2738	1154	2.54
	1.8	2584	1186	2.61
	2.0	2499	1207	2.66
T3	0.2	3953	863	1.80
	0.4	3837	903	1.88
	0.6	-	-	-
	0.8	-	-	-
	1.0	-	-	-
	1.2	-	-	-
	1.4	-	-	-
	1.6	-	-	-
	1.8	-	-	-
	2.0	-	-	-
T4	0.2	4964	1024	3.47
	0.4	4909	1046	3.55
	0.6	4808	1079	3.66
	0.8	4764	1096	3.72
	1.0	4626	1123	3.81
	1.2	4507	1167	3.96
	1.4	4409	1207	4.10
	1.6	4137	1257	4.26
	1.8	3878	1311	4.45
	2.0	3835	1332	4.52
T5	0.2	5128	1078	3.88
	0.4	5061	1102	3.96
	0.6	4965	1131	4.07
	0.8	4899	1154	4.15
	1.0	4779	1182	4.25
	1.2	4668	1214	4.37
	1.4	4583	1242	4.47
	1.6	4367	1283	4.61
	1.8	4137	1330	4.78
	2.0	4015	1356	4.88

Horizontal Flow				
Speed Tap	ESP	CFM	RPM	BHP
T1	0.2	2735	543	0.54
	0.4	2600	606	0.60
	0.6	-	-	-
	0.8	-	-	-
	1.0	-	-	-
	1.2	-	-	-
	1.4	-	-	-
	1.6	-	-	-
	1.8	-	-	-
	2.0	-	-	-
T2	0.2	4297	761	1.68
	0.4	4168	801	1.76
	0.6	4081	844	1.86
	0.8	4030	856	1.89
	1.0	3939	926	2.04
	1.2	3789	966	2.13
	1.4	3553	1033	2.27
	1.6	3290	1090	2.40
	1.8	3097	1158	2.55
	2.0	2906	1192	2.63
T3	0.2	4165	735	1.53
	0.4	4089	772	1.61
	0.6	3985	824	1.72
	0.8	-	-	-
	1.0	-	-	-
	1.2	-	-	-
	1.4	-	-	-
	1.6	-	-	-
	1.8	-	-	-
	2.0	-	-	-
T4	0.2	5300	888	3.01
	0.4	5215	918	3.12
	0.6	5121	951	3.23
	0.8	5044	979	3.32
	1.0	4957	1015	3.44
	1.2	4861	1040	3.53
	1.4	4769	1082	3.67
	1.6	4665	1099	3.73
	1.8	4563	1150	3.90
	2.0	4455	1181	4.01
T5	0.2	5478	900	3.05
	0.4	5390	936	3.17
	0.6	5309	971	3.29
	0.8	5216	1003	3.40
	1.0	5127	1036	3.52
	1.2	5046	1067	3.62
	1.4	4954	1096	3.72
	1.6	4872	1128	3.83
	1.8	4794	1156	3.92
	2.0	4681	1188	4.03

Down Flow				
Speed Tap	ESP	CFM	RPM	BHP
T6	0.2	2308	613	0.61
	0.4	2028	682	0.68
	0.6	1744	739	0.73
	0.8	1619	784	0.78
	1.0	-	-	-
	1.2	-	-	-
	1.4	-	-	-
	1.6	-	-	-
	1.8	-	-	-
	2.0	-	-	-
T7	0.2	-	-	-
	0.4	2903	798	1.24
	0.6	2673	845	1.31
	0.8	2525	888	1.37
	1.0	2282	933	1.44
	1.2	1982	972	1.50
	1.4	1803	1007	1.56
	1.6	1671	1031	1.60
	1.8	1475	1065	1.65
	2.0	1335	1097	1.70
T8	0.2	3136	755	1.22
	0.4	3006	812	1.32
	0.6	2794	858	1.39
	0.8	2632	901	1.46
	1.0	2409	945	1.53
	1.2	2114	984	1.59
	1.4	1963	1025	1.66
	1.6	1854	1046	1.70
	1.8	-	-	-
	2.0	-	-	-
T9	0.2	3308	785	1.39
	0.4	3202	839	1.48
	0.6	3028	883	1.56
	0.8	2838	925	1.63
	1.0	2655	967	1.71
	1.2	2380	1007	1.78
	1.4	2257	1056	1.86
	1.6	2164	1076	1.90
	1.8	1994	1113	1.97
	2.0	1914	1139	2.01
T10	0.2	3472	814	1.56
	0.4	3384	865	1.65
	0.6	3244	907	1.73
	0.8	3032	948	1.81
	1.0	2886	989	1.89
	1.2	2639	1029	1.97
	1.4	2515	1083	2.07
	1.6	2411	1105	2.11
	1.8	2255	1141	2.18
	2.0	2192	1165	2.22

Horizontal Flow				
Speed Tap	ESP	CFM	RPM	BHP
T6	0.2	2644	545	0.54
	0.4	2483	620	0.61
	0.6	2299	683	0.68
	0.8	1979	773	0.77
	1.0	1758	817	0.81
	1.2	1558	877	0.87
	1.4	1448	920	0.91
	1.6	-	-	-
	1.8	-	-	-
	2.0	-	-	-
T7	0.2	-	-	-
	0.4	-	-	-
	0.6	-	-	-
	0.8	-	-	-
	1.0	-	-	-
	1.2	2716	928	1.44
	1.4	2495	989	1.53
	1.6	2298	1033	1.60
	1.8	2137	1076	1.66
	2.0	2078	1101	1.70
T8	0.2	3602	665	1.08
	0.4	3491	707	1.15
	0.6	3379	759	1.23
	0.8	3205	818	1.33
	1.0	3052	874	1.42
	1.2	2852	932	1.51
	1.4	2617	995	1.61
	1.6	2401	1045	1.69
	1.8	2234	1092	1.77
	2.0	2196	1112	1.80
T9	0.2	3793	691	1.22
	0.4	3667	731	1.29
	0.6	3566	780	1.38
	0.8	3441	827	1.46
	1.0	3306	887	1.57
	1.2	3114	939	1.66
	1.4	2858	1006	1.78
	1.6	2608	1066	1.88
	1.8	2426	1123	1.98
	2.0	2404	1132	2.00
T10	0.2	-	-	-
	0.4	3835	756	1.44
	0.6	3741	801	1.53
	0.8	3656	835	1.60
	1.0	3536	900	1.72
	1.2	3355	947	1.81
	1.4	3092	1015	1.94
	1.6	2821	1080	2.06
	1.8	2627	1152	2.20
	2.0	2584	1152	2.20

Note:

- Taps T1 and T2 are for first stage of cooling only. Taps T6 and T7 are for first stage of heating only. Refer to page 11 for speed tap selection.
- Shaded area are not recommended for cooling or heating operation.
- Airflow table includes resistance for base unit only with 2" clean air filters in place.
  Any Additional air resistance caused by factory or field installed options or accessories must be added to the ESP in order to select the correct speed tap.

APPENDIX A BLOWER PERFORMANCE TABLES

12.5 Ton
180 MBH Gas Heat Exchanger
Standard Static Direct Drive
Models: DRG1503DM, DRG1504DM, DRG1507DM

Down Flow					Horizontal Flow				
Speed Tap	ESP	CFM	RPM	BHP	Speed Tap	ESP	CFM	RPM	BHP
T1	0.2	2377	559	0.52	T1	0.2	2478	525	0.49
	0.4	-	-	-		0.4	-	-	-
	0.6	-	-	-		0.6	-	-	-
	0.8	-	-	-		0.8	-	-	-
T2	0.2	3178	662	0.93	T2	0.2	3261	616	0.87
	0.4	3007	705	0.99		0.4	3134	667	0.94
	0.6	2856	751	1.05		0.6	3011	717	1.01
	0.8	2533	822	1.16		0.8	2786	779	1.09
T3	0.2	3944	784	1.59	T3	0.2	4019	720	1.46
	0.4	3783	823	1.67		0.4	3926	756	1.53
	0.6	-	-	-		0.6	3807	805	1.63
	0.8	-	-	-		0.8	-	-	-
T4	0.2	4435	842	2.08	T4	0.2	4484	786	1.95
	0.4	4287	886	2.19		0.4	4364	830	2.05
	0.6	4153	922	2.28		0.6	4287	863	2.14
	0.8	4025	952	2.36		0.8	4194	899	2.23
T5	0.2	4719	897	2.50	T5	0.2	4777	830	2.31
	0.4	4587	929	2.59		0.4	4680	865	2.41
	0.6	4458	962	2.68		0.6	4581	901	2.51
	0.8	4329	993	2.77		0.8	4485	934	2.60
T6	0.2	2072	515	0.39	T6	0.2	2181	490	0.37
	0.4	-	-	-		0.4	1930	540	0.41
	0.6	-	-	-		0.6	-	-	-
	0.8	-	-	-		0.8	-	-	-
T7	0.2	2634	596	0.64	T7	0.2	2728	556	0.60
	0.4	2464	655	0.71		0.4	2519	587	0.63
	0.6	2245	716	0.77		0.6	2428	683	0.74
	0.8	1963	785	0.85		0.8	2154	755	0.82
T8	0.2	3004	649	0.86	T8	0.2	3097	601	0.79
	0.4	2863	699	0.92		0.4	2961	712	0.94
	0.6	2675	752	0.99		0.6	2776	707	0.93
	0.8	-	-	-		0.8	2632	763	1.01
T9	0.2	3250	684	1.02	T9	0.2	3347	632	0.94
	0.4	3106	729	1.09		0.4	3147	684	1.02
	0.6	2943	776	1.16		0.6	3015	723	1.08
	0.8	2694	836	1.25		0.8	2882	780	1.16
T10	0.2	3474	714	1.19	T10	0.2	3605	663	1.10
	0.4	3314	759	1.27		0.4	3377	708	1.18
	0.6	3178	799	1.33		0.6	3240	746	1.24
	0.8	3035	841	1.40		0.8	3121	801	1.34

12.5 Ton
180 MBH Gas Heat Exchanger
Medium Static Direct Drive
Models: DRG1503LM, DRG1504LM, DRG1507LM

Down Flow					Horizontal Flow				
Speed Tap	ESP	CFM	RPM	BHP	Speed Tap	ESP	CFM	RPM	BHP
T1	0.2	2377	559	0.52	T1	0.2	2478	525	0.49
	0.4	-	-	-		0.4	-	-	-
	0.6	-	-	-		0.6	-	-	-
	0.8	-	-	-		0.8	-	-	-
	1.0	-	-	-		1.0	-	-	-
	1.2	-	-	-		1.2	-	-	-
	1.4	-	-	-		1.4	-	-	-
T2	0.2	3655	740	1.32	T2	0.2	3743	682	1.22
	0.4	3495	782	1.40		0.4	3661	715	1.28
	0.6	3361	820	1.46		0.6	3519	772	1.38
	0.8	3231	857	1.53		0.8	3457	814	1.45
	1.0	2967	915	1.63		1.0	3294	858	1.53
	1.2	2685	969	1.73		1.2	3051	924	1.65
	1.4	2550	1001	1.79		1.4	2667	995	1.78
T3	0.2	3944	784	1.59	T3	0.2	4019	720	1.46
	0.4	3783	823	1.67		0.4	3926	756	1.53
	0.6	-	-	-		0.6	3807	805	1.63
	0.8	-	-	-		0.8	-	-	-
	1.0	-	-	-		1.0	-	-	-
	1.2	-	-	-		1.2	-	-	-
	1.4	-	-	-		1.4	-	-	-
T4	0.2	4536	878	2.30	T4	0.2	4609	807	2.11
	0.4	4407	910	2.38		0.4	4517	843	2.21
	0.6	4304	939	2.46		0.6	4424	882	2.31
	0.8	4176	974	2.55		0.8	4323	915	2.40
	1.0	4066	1004	2.63		1.0	4216	951	2.49
	1.2	3946	1036	2.71		1.2	4115	989	2.59
	1.4	3826	1067	2.79		1.4	4010	1025	2.68
T5	0.2	4719	897	2.50	T5	0.2	4777	830	2.31
	0.4	4587	929	2.59		0.4	4680	865	2.41
	0.6	4458	962	2.68		0.6	4581	901	2.51
	0.8	4329	993	2.77		0.8	4485	934	2.60
	1.0	4211	1025	2.86		1.0	4387	970	2.70
	1.2	4087	1057	2.94		1.2	4285	1005	2.80
	1.4	3975	1087	3.03		1.4	4184	1039	2.89
T6	0.2	2379	559	0.52	T6	0.2	2478	525	0.49
	0.4	2161	626	0.58		0.4	2198	539	0.50
	0.6	1927	690	0.64		0.6	2096	668	0.62
	0.8	-	-	-		0.8	-	-	-
	1.0	-	-	-		1.0	-	-	-
	1.2	-	-	-		1.2	-	-	-
	1.4	-	-	-		1.4	-	-	-
T7	0.2	3161	672	0.96	T7	0.2	3256	621	0.89
	0.4	2995	722	1.03		0.4	3060	673	0.96
	0.6	2866	762	1.09		0.6	2927	713	1.02
	0.8	2551	840	1.20		0.8	2787	773	1.10
	1.0	2392	878	1.25		1.0	2516	807	1.15
	1.2	2198	923	1.32		1.2	2205	837	1.20
	1.4	2034	961	1.37		1.4	2046	919	1.31
T8	0.2	3310	692	1.06	T8	0.2	3409	640	0.98
	0.4	3163	736	1.13		0.4	3206	690	1.06
	0.6	3006	782	1.20		0.6	3073	727	1.12
	0.8	2765	840	1.29		0.8	2943	785	1.21
	1.0	2540	894	1.37		1.0	2731	823	1.26
	1.2	-	-	-		1.2	2519	873	1.3
	1.4	-	-	-		1.4	-	-	-
T9	0.2	3586	732	1.28	T9	0.2	3697	677	1.19
	0.4	3419	772	1.35		0.4	3487	722	1.27
	0.6	3288	811	1.42		0.6	3346	758	1.33
	0.8	3089	858	1.50		0.8	3228	812	1.42
	1.0	2878	909	1.59		1.0	3136	862	1.51
	1.2	2754	948	1.66		1.2	2969	911	1.60
	1.4	-	-	-		1.4	2739	979	1.72
T10	0.2	3834	767	1.51	T10	0.2	3963	713	1.40
	0.4	3647	805	1.59		0.4	3752	752	1.48
	0.6	3528	839	1.65		0.6	3607	787	1.55
	0.8	3369	876	1.73		0.8	3497	839	1.65
	1.0	3183	923	1.82		1.0	3398	881	1.74
	1.2	3149	962	1.90		1.2	3217	925	1.82
	1.4	2667	1024	2.02		1.4	3004	994	1.96

Note:

- Taps T1 and T2 are for first stage of cooling only. Taps T6 and T7 are for first stage of heating only. Refer to page 11 for speed tap selection.
- Shaded area are not recommended for cooling or heating operation.
- Airflow table includes resistance for base unit only with 2" clean air filters in place.
  Any Additional air resistance caused by factory or field installed options or accessories must be added to the ESP in order to select the correct speed tap.

APPENDIX A BLOWER PERFORMANCE TABLES

12.5 Ton
180 MBH Gas Heat Exchanger
High Static Direct Drive
Models: DRG1503WM, DRG1504WM, DRG1507WM

Down Flow				
Speed Tap	ESP	CFM	RPM	BHP
T1	0.2	2511	639	0.63
	0.4	-	-	-
	0.6	-	-	-
	0.8	-	-	-
	1.0	-	-	-
	1.2	-	-	-
	1.4	-	-	-
	1.6	-	-	-
	1.8	-	-	-
	2.0	-	-	-
T2	0.2	3737	894	1.97
	0.4	3699	919	2.03
	0.6	3604	952	2.10
	0.8	3476	990	2.18
	1.0	3276	1035	2.28
	1.2	3052	1082	2.38
	1.4	2890	1120	2.47
	1.6	2738	1154	2.54
	1.8	2584	1186	2.61
	2.0	2499	1207	2.66
T3	0.2	3953	863	1.80
	0.4	3837	903	1.88
	0.6	-	-	-
	0.8	-	-	-
	1.0	-	-	-
	1.2	-	-	-
	1.4	-	-	-
	1.6	-	-	-
	1.8	-	-	-
	2.0	-	-	-
T4	0.2	4964	1024	3.47
	0.4	4909	1046	3.55
	0.6	4808	1079	3.66
	0.8	4764	1096	3.72
	1.0	4626	1123	3.81
	1.2	4507	1167	3.96
	1.4	4409	1207	4.10
	1.6	4137	1257	4.26
	1.8	3878	1311	4.45
	2.0	3835	1332	4.52
T5	0.2	5128	1078	3.88
	0.4	5061	1102	3.96
	0.6	4965	1131	4.07
	0.8	4899	1154	4.15
	1.0	4779	1182	4.25
	1.2	4668	1214	4.37
	1.4	4583	1242	4.47
	1.6	4367	1283	4.61
	1.8	4137	1330	4.78
	2.0	4015	1356	4.88

Horizontal Flow				
Speed Tap	ESP	CFM	RPM	BHP
T1	0.2	2735	543	0.54
	0.4	2600	606	0.60
	0.6	-	-	-
	0.8	-	-	-
	1.0	-	-	-
	1.2	-	-	-
	1.4	-	-	-
	1.6	-	-	-
	1.8	-	-	-
	2.0	-	-	-
T2	0.2	4297	761	1.68
	0.4	4168	801	1.76
	0.6	4081	844	1.86
	0.8	4030	856	1.89
	1.0	3939	926	2.04
	1.2	3789	966	2.13
	1.4	3553	1033	2.27
	1.6	3290	1090	2.40
	1.8	3097	1158	2.55
	2.0	2906	1192	2.63
T3	0.2	4165	735	1.53
	0.4	4089	772	1.61
	0.6	3985	824	1.72
	0.8	-	-	-
	1.0	-	-	-
	1.2	-	-	-
	1.4	-	-	-
	1.6	-	-	-
	1.8	-	-	-
	2.0	-	-	-
T4	0.2	5300	888	3.01
	0.4	5215	918	3.12
	0.6	5121	951	3.23
	0.8	5044	979	3.32
	1.0	4957	1015	3.44
	1.2	4861	1040	3.53
	1.4	4769	1082	3.67
	1.6	4665	1099	3.73
	1.8	4563	1150	3.90
	2.0	4455	1181	4.01
T5	0.2	5478	900	3.05
	0.4	5390	936	3.17
	0.6	5309	971	3.29
	0.8	5216	1003	3.40
	1.0	5127	1036	3.52
	1.2	5046	1067	3.62
	1.4	4954	1096	3.72
	1.6	4872	1128	3.83
	1.8	4794	1156	3.92
	2.0	4681	1188	4.03

Down Flow				
Speed Tap	ESP	CFM	RPM	BHP
T6	0.2	2642	670	0.83
	0.4	2424	734	0.91
	0.6	2138	787	0.97
	0.8	2032	831	1.03
	1.0	-	-	-
	1.2	-	-	-
	1.4	-	-	-
	1.6	-	-	-
	1.8	-	-	-
	2.0	-	-	-
T7	0.2	3338	800	1.43
	0.4	3257	846	1.51
	0.6	3135	889	1.59
	0.8	2997	928	1.66
	1.0	2772	977	1.75
	1.2	2524	1027	1.83
	1.4	2381	1057	1.89
	1.6	2249	1086	1.94
	1.8	2096	1121	2.00
	2.0	2026	1147	2.05
T8	0.2	3731	860	1.85
	0.4	3658	907	1.95
	0.6	3568	945	2.03
	0.8	3334	985	2.12
	1.0	3233	1023	2.20
	1.2	3041	1063	2.29
	1.4	2883	1118	2.41
	1.6	2729	1147	2.47
	1.8	2587	1180	2.54
	2.0	2525	1203	2.59
T9	0.2	3877	887	2.04
	0.4	3804	930	2.14
	0.6	3734	966	2.22
	0.8	3502	1005	2.31
	1.0	3416	1042	2.39
	1.2	3255	1082	2.49
	1.4	3070	1135	2.61
	1.6	2883	1168	2.68
	1.8	2743	1199	2.75
	2.0	2669	1223	2.81
T10	0.2	4016	912	2.23
	0.4	3936	952	2.33
	0.6	3878	987	2.41
	0.8	3659	1025	2.50
	1.0	3577	1060	2.59
	1.2	3443	1100	2.69
	1.4	3235	1150	2.81
	1.6	3020	1185	2.89
	1.8	2878	1215	2.97
	2.0	2786	1242	3.03

Horizontal Flow				
Speed Tap	ESP	CFM	RPM	BHP
T6	0.2	3038	593	0.73
	0.4	2944	646	0.80
	0.6	2790	708	0.87
	0.8	2484	795	0.98
	1.0	2287	839	1.03
	1.2	2082	906	1.12
	1.4	1935	956	1.18
	1.6	-	-	-
	1.8	-	-	-
	2.0	-	-	-
T7	0.2	3805	695	1.24
	0.4	3702	740	1.32
	0.6	3604	785	1.40
	0.8	3490	833	1.49
	1.0	3390	879	1.57
	1.2	3220	935	1.67
	1.4	2939	1006	1.80
	1.6	2663	1072	1.91
	1.8	2474	1119	2.00
	2.0	2431	1134	2.03
T8	0.2	4243	753	1.62
	0.4	4111	794	1.71
	0.6	4023	836	1.80
	0.8	3970	852	1.83
	1.0	3875	921	1.98
	1.2	3719	962	2.07
	1.4	3475	1030	2.22
	1.6	3204	1090	2.35
	1.8	3009	1171	2.52
	2.0	2852	1185	2.55
T9	0.2	4392	774	1.78
	0.4	4274	814	1.87
	0.6	4186	857	1.97
	0.8	4133	864	1.98
	1.0	4050	934	2.15
	1.2	3912	974	2.24
	1.4	3695	1037	2.38
	1.6	3449	1089	2.50
	1.8	3265	1140	2.62
	2.0	3008	1205	2.77
T10	0.2	4530	794	1.94
	0.4	4433	832	2.03
	0.6	4343	875	2.14
	0.8	4276	878	2.14
	1.0	4202	947	2.31
	1.2	4083	986	2.41
	1.4	3904	1045	2.55
	1.6	3697	1085	2.65
	1.8	3534	1128	2.75
	2.0	3172	1224	2.99

Note:

- Taps T1 and T2 are for first stage of cooling only. Taps T6 and T7 are for first stage of heating only. Refer to page 11 for speed tap selection.
- Shaded area are not recommended for cooling or heating operation.
- Airflow table includes resistance for base unit only with 2" clean air filters in place.
  Any Additional air resistance caused by factory or field installed options or accessories must be added to the ESP in order to select the correct speed tap.

APPENDIX A BLOWER PERFORMANCE TABLES

12.5 Ton
240 MBH Gas Heat Exchanger
Standard Static Direct Drive
Models: DRG1503DH, DRG1504DH, DRG1507DH

Down Flow					Horizontal Flow				
Speed Tap	ESP	CFM	RPM	BHP	Speed Tap	ESP	CFM	RPM	BHP
T1	0.2	2377	559	0.52	T1	0.2	2478	525	0.49
	0.4	-	-	-		0.4	-	-	-
	0.6	-	-	-		0.6	-	-	-
	0.8	-	-	-		0.8	-	-	-
T2	0.2	3178	662	0.93	T2	0.2	3261	616	0.87
	0.4	3007	705	0.99		0.4	3134	667	0.94
	0.6	2856	751	1.05		0.6	3011	717	1.01
	0.8	2533	822	1.16		0.8	2786	779	1.09
T3	0.2	3944	784	1.59	T3	0.2	4019	720	1.46
	0.4	3783	823	1.67		0.4	3926	756	1.53
	0.6	-	-	-		0.6	3807	805	1.63
	0.8	-	-	-		0.8	-	-	-
T4	0.2	4435	842	2.08	T4	0.2	4484	786	1.95
	0.4	4287	886	2.19		0.4	4364	830	2.05
	0.6	4153	922	2.28		0.6	4287	863	2.14
	0.8	4025	952	2.36		0.8	4194	899	2.23
T5	0.2	4719	897	2.50	T5	0.2	4777	830	2.31
	0.4	4587	929	2.59		0.4	4680	865	2.41
	0.6	4458	962	2.68		0.6	4581	901	2.51
	0.8	4329	993	2.77		0.8	4485	934	2.60
T6	0.2	2227	538	0.45	T6	0.2	2330	508	0.43
	0.4	-	-	-		0.4	-	-	-
	0.6	-	-	-		0.6	-	-	-
	0.8	-	-	-		0.8	-	-	-
T7	0.2	2737	611	0.70	T7	0.2	2831	568	0.65
	0.4	2580	667	0.77		0.4	2655	616	0.71
	0.6	2368	726	0.83		0.6	2547	689	0.79
	0.8	2085	795	0.91		0.8	2325	759	0.87
T8	0.2	3190	675	0.98	T8	0.2	3286	625	0.91
	0.4	3049	722	1.05		0.4	3092	677	0.98
	0.6	2880	770	1.12		0.6	2952	716	1.04
	0.8	-	-	-		0.8	2818	775	1.12
T9	0.2	3714	750	1.40	T9	0.2	3833	695	1.29
	0.4	3536	788	1.47		0.4	3618	737	1.37
	0.6	3412	825	1.54		0.6	3479	771	1.44
	0.8	3235	867	1.61		0.8	3366	825	1.54
T10	0.2	4133	809	1.84	T10	0.2	4297	759	1.73
	0.4	3953	848	1.93		0.4	4107	793	1.80
	0.6	3812	881	2.00		0.6	3960	842	1.92
	0.8	3676	912	2.07		0.8	3859	876	1.99

12.5 Ton
240 MBH Gas Heat Exchanger
Medium Static Direct Drive
Models: DRG1503LH, DRG1504LH, DRG1507LH

Down Flow					Horizontal Flow				
Speed Tap	ESP	CFM	RPM	BHP	Speed Tap	ESP	CFM	RPM	BHP
T1	0.2	2377	559	0.52	T1	0.2	2478	525	0.49
	0.4	-	-	-		0.4	-	-	-
	0.6	-	-	-		0.6	-	-	-
	0.8	-	-	-		0.8	-	-	-
	1.0	-	-	-		1.0	-	-	-
	1.2	-	-	-		1.2	-	-	-
	1.4	-	-	-		1.4	-	-	-
T2	0.2	3655	740	1.32	T2	0.2	3743	682	1.22
	0.4	3495	782	1.40		0.4	3661	715	1.28
	0.6	3361	820	1.46		0.6	3519	772	1.38
	0.8	3231	857	1.53		0.8	3457	814	1.45
	1.0	2967	915	1.63		1.0	3294	858	1.53
	1.2	2685	969	1.73		1.2	3051	924	1.65
	1.4	2550	1001	1.79		1.4	2667	995	1.78
T3	0.2	3944	784	1.59	T3	0.2	4019	720	1.46
	0.4	3783	823	1.67		0.4	3926	756	1.53
	0.6	-	-	-		0.6	3807	805	1.63
	0.8	-	-	-		0.8	-	-	-
	1.0	-	-	-		1.0	-	-	-
	1.2	-	-	-		1.2	-	-	-
	1.4	-	-	-		1.4	-	-	-
T4	0.2	4536	878	2.30	T4	0.2	4609	807	2.11
	0.4	4407	910	2.38		0.4	4517	843	2.21
	0.6	4304	939	2.46		0.6	4424	882	2.31
	0.8	4176	974	2.55		0.8	4323	915	2.40
	1.0	4066	1004	2.63		1.0	4216	951	2.49
	1.2	3946	1036	2.71		1.2	4115	989	2.59
	1.4	3826	1067	2.79		1.4	4010	1025	2.68
T5	0.2	4719	897	2.50	T5	0.2	4777	830	2.31
	0.4	4587	929	2.59		0.4	4680	865	2.41
	0.6	4458	962	2.68		0.6	4581	901	2.51
	0.8	4329	993	2.77		0.8	4485	934	2.60
	1.0	4211	1025	2.86		1.0	4387	970	2.70
	1.2	4087	1057	2.94		1.2	4285	1005	2.80
	1.4	3975	1087	3.03		1.4	4184	1039	2.89
T6	0.2	2669	601	0.66	T6	0.2	2763	560	0.62
	0.4	2504	659	0.73		0.4	2565	596	0.66
	0.6	2287	719	0.79		0.6	2469	685	0.76
	0.8	-	-	-		0.8	2212	756	0.83
	1.0	-	-	-		1.0	-	-	-
	1.2	-	-	-		1.2	-	-	-
	1.4	-	-	-		1.4	-	-	-
T7	0.2	3310	692	1.06	T7	0.2	3409	640	0.98
	0.4	3163	736	1.13		0.4	3206	690	1.06
	0.6	3006	782	1.20		0.6	3073	727	1.12
	0.8	2765	840	1.29		0.8	2943	785	1.21
	1.0	2540	894	1.37		1.0	2731	823	1.26
	1.2	2390	935	1.44		1.2	2519	873	1.34
	1.4	2163	988	1.52		1.4	2284	938	1.44
T8	0.2	3834	767	1.51	T8	0.2	3963	713	1.40
	0.4	3647	805	1.59		0.4	3752	752	1.48
	0.6	3528	839	1.65		0.6	3607	787	1.55
	0.8	3369	876	1.73		0.8	3497	839	1.65
	1.0	3183	923	1.82		1.0	3398	881	1.74
	1.2	3149	962	1.90		1.2	3217	925	1.8
	1.4	-	-	-		1.4	3004	994	2.0
T9	0.2	4218	823	1.96	T9	0.2	4404	775	1.84
	0.4	4046	860	2.05		0.4	4224	807	1.92
	0.6	3902	895	2.13		0.6	4087	852	2.03
	0.8	3774	927	2.21		0.8	3989	888	2.11
	1.0	3631	963	2.29		1.0	3865	925	2.20
	1.2	3485	1000	2.38		1.2	3723	963	2.29
	1.4	3327	1032	2.46		1.4	3608	999	2.38
T10	0.2	4537	901	2.51	T10	0.2	4777	830	2.31
	0.4	4382	931	2.59		0.4	5442	854	2.38
	0.6	4251	961	2.68		0.6	4581	901	2.51
	0.8	4142	989	2.75		0.8	4322	934	2.60
	1.0	4026	1019	2.84		1.0	4387	970	2.70
	1.2	3906	1046	2.91		1.2	4080	1002	2.79
	1.4	3763	1078	3.00		1.4	3916	1037	2.89

Note:

- Taps T1 and T2 are for first stage of cooling only. Taps T6 and T7 are for first stage of heating only. Refer to page 11 for speed tap selection.
- Shaded area are not recommended for cooling or heating operation.
- Airflow table includes resistance for base unit only with 2" clean air filters in place.
  Any Additional air resistance caused by factory or field installed options or accessories must be added to the ESP in order to select the correct speed tap.

APPENDIX A BLOWER PERFORMANCE TABLES

12.5 Ton
240 MBH Gas Heat Exchanger
High Static Direct Drive
Models: DRG1503WH, DRG1504WH, DRG1507WH

Down Flow				
Speed Tap	ESP	CFM	RPM	BHP
T1	0.2	2511	639	0.63
	0.4	-	-	-
	0.6	-	-	-
	0.8	-	-	-
	1.0	-	-	-
	1.2	-	-	-
	1.4	-	-	-
	1.6	-	-	-
	1.8	-	-	-
	2.0	-	-	-
T2	0.2	3737	894	1.97
	0.4	3699	919	2.03
	0.6	3604	952	2.10
	0.8	3476	990	2.18
	1.0	3276	1035	2.28
	1.2	3052	1082	2.38
	1.4	2890	1120	2.47
	1.6	2738	1154	2.54
	1.8	2584	1186	2.61
	2.0	2499	1207	2.66
T3	0.2	3953	863	1.80
	0.4	3837	903	1.88
	0.6	-	-	-
	0.8	-	-	-
	1.0	-	-	-
	1.2	-	-	-
	1.4	-	-	-
	1.6	-	-	-
	1.8	-	-	-
	2.0	-	-	-
T4	0.2	4964	1024	3.47
	0.4	4909	1046	3.55
	0.6	4808	1079	3.66
	0.8	4764	1096	3.72
	1.0	4626	1123	3.81
	1.2	4507	1167	3.96
	1.4	4409	1207	4.10
	1.6	4137	1257	4.26
	1.8	3878	1311	4.45
	2.0	3835	1332	4.52
T5	0.2	5128	1078	3.88
	0.4	5061	1102	3.96
	0.6	4965	1131	4.07
	0.8	4899	1154	4.15
	1.0	4779	1182	4.25
	1.2	4668	1214	4.37
	1.4	4583	1242	4.47
	1.6	4367	1283	4.61
	1.8	4137	1330	4.78
	2.0	4015	1356	4.88

Horizontal Flow				
Speed Tap	ESP	CFM	RPM	BHP
T1	0.2	2735	543	0.54
	0.4	2600	606	0.60
	0.6	-	-	-
	0.8	-	-	-
	1.0	-	-	-
	1.2	-	-	-
	1.4	-	-	-
	1.6	-	-	-
	1.8	-	-	-
	2.0	-	-	-
T2	0.2	4297	761	1.68
	0.4	4168	801	1.76
	0.6	4081	844	1.86
	0.8	4030	856	1.89
	1.0	3939	926	2.04
	1.2	3789	966	2.13
	1.4	3553	1033	2.27
	1.6	3290	1090	2.40
	1.8	3097	1158	2.55
	2.0	2906	1192	2.63
T3	0.2	4165	735	1.53
	0.4	4089	772	1.61
	0.6	3985	824	1.72
	0.8	-	-	-
	1.0	-	-	-
	1.2	-	-	-
	1.4	-	-	-
	1.6	-	-	-
	1.8	-	-	-
	2.0	-	-	-
T4	0.2	5300	888	3.01
	0.4	5215	918	3.12
	0.6	5121	951	3.23
	0.8	5044	979	3.32
	1.0	4957	1015	3.44
	1.2	4861	1040	3.53
	1.4	4769	1082	3.67
	1.6	4665	1099	3.73
	1.8	4563	1150	3.90
	2.0	4455	1181	4.01
T5	0.2	5478	900	3.05
	0.4	5390	936	3.17
	0.6	5309	971	3.29
	0.8	5216	1003	3.40
	1.0	5127	1036	3.52
	1.2	5046	1067	3.62
	1.4	4954	1096	3.72
	1.6	4872	1128	3.83
	1.8	4794	1156	3.92
	2.0	4681	1188	4.03

Down Flow				
Speed Tap	ESP	CFM	RPM	BHP
T6	0.2	2833	703	0.97
	0.4	2651	764	1.05
	0.6	2386	815	1.12
	0.8	2266	858	1.18
	1.0	-	-	-
	1.2	-	-	-
	1.4	-	-	-
	1.6	-	-	-
	1.8	-	-	-
	2.0	-	-	-
T7	0.2	3533	825	1.62
	0.4	3449	875	1.72
	0.6	3322	916	1.80
	0.8	3103	957	1.88
	1.0	2969	997	1.96
	1.2	2734	1037	2.04
	1.4	2605	1092	2.14
	1.6	2492	1115	2.19
	1.8	2340	1151	2.26
	2.0	2281	1174	2.31
T8	0.2	3830	878	1.97
	0.4	3757	922	2.07
	0.6	3682	959	2.16
	0.8	3448	999	2.25
	1.0	3358	1036	2.33
	1.2	3188	1076	2.42
	1.4	3011	1130	2.54
	1.6	2835	1162	2.61
	1.8	-	-	-
	2.0	-	-	-
T9	0.2	4169	940	2.45
	0.4	4075	977	2.55
	0.6	4019	1009	2.63
	0.8	3828	1046	2.73
	1.0	3739	1080	2.82
	1.2	3628	1119	2.92
	1.4	3405	1164	3.04
	1.6	3171	1200	3.13
	1.8	3021	1230	3.21
	2.0	2903	1262	3.30
T10	0.2	4464	995	2.96
	0.4	4325	1025	3.05
	0.6	4238	1053	3.13
	0.8	4143	1088	3.23
	1.0	4001	1118	3.32
	1.2	3910	1155	3.43
	1.4	3708	1187	3.53
	1.6	3493	1213	3.60
	1.8	3312	1251	3.72
	2.0	3137	1299	3.86

Horizontal Flow				
Speed Tap	ESP	CFM	RPM	BHP
T6	0.2	3259	621	0.86
	0.4	3169	667	0.92
	0.6	3032	726	1.00
	0.8	2769	805	1.11
	1.0	2588	852	1.17
	1.2	2383	918	1.27
	1.4	2201	973	1.34
	1.6	-	-	-
	1.8	-	-	-
	2.0	-	-	-
T7	0.2	-	-	-
	0.4	-	-	-
	0.6	3807	809	1.59
	0.8	3732	839	1.65
	1.0	3619	905	1.78
	1.2	3443	950	1.87
	1.4	3180	1019	2.00
	1.6	2905	1084	2.13
	1.8	2709	1161	2.28
	2.0	2647	1160	2.28
T8	0.2	4345	768	1.73
	0.4	4221	808	1.82
	0.6	4134	850	1.91
	0.8	4082	860	1.93
	1.0	3995	930	2.09
	1.2	3851	970	2.18
	1.4	3624	1035	2.33
	1.6	3368	1090	2.45
	1.8	3179	1148	2.58
	2.0	2956	1199	2.70
T9	0.2	4675	815	2.13
	0.4	4607	850	2.22
	0.6	4514	895	2.34
	0.8	4421	896	2.34
	1.0	4355	962	2.51
	1.2	4255	1001	2.61
	1.4	4126	1052	2.75
	1.6	3975	1077	2.81
	1.8	3843	1128	2.95
	2.0	3566	1206	3.15
T10	0.2	4935	851	2.53
	0.4	4889	876	2.61
	0.6	4793	927	2.76
	0.8	4667	943	2.80
	1.0	4603	993	2.95
	1.2	4527	1028	3.06
	1.4	4465	1067	3.17
	1.6	4399	1067	3.17
	1.8	4327	1145	3.40
	2.0	4181	1168	3.47

Note:

- Taps T1 and T2 are for first stage of cooling only. Taps T6 and T7 are for first stage of heating only. Refer to page 11 for speed tap selection.
- Shaded area are not recommended for cooling or heating operation.
- Airflow table includes resistance for base unit only with 2" clean air filters in place.
  Any Additional air resistance caused by factory or field installed options or accessories must be added to the ESP in order to select the correct speed tap.

APPENDIX A BLOWER PERFORMANCE DATA

THE FOLLOWING TABLES ARE PROVIDED FOR REFERENCE ONLY TO SHOW DDC CONTROL SETTINGS RELATIONSHIP TO UNIT CFM. BLOWER SPEED SETTINGS MUST BE SET TO MEET THE MINIMUM REQUIRED CFM OF THEIR STAGES.

7.5 TON

MODELS : DRG0903D, DRG0904D & DRG0907D WITH DDC CONTROLS

STANDARD STATIC TO 2.4 HP (0.2 ~ 0.8 ESP)

DOWN FLOW

CFM	0.2			0.4			0.6			0.8			1.0		
	RPM	DDC %	BHP	RPM	DDC %	BHP	RPM	DDC %	BHP	RPM	DDC %	BHP	RPM	DDC %	BHP
1800	519	22	0.39	584	24	0.50	643	26	0.55	717	27	0.73	-	-	-
2000	554	26	0.46	618	27	0.58	676	29	0.63	747	31	0.84	-	-	-
2200	589	29	0.53	653	31	0.69	709	33	0.72	777	35	0.97	-	-	-
2400	624	33	0.63	687	35	0.81	743	37	0.83	807	39	1.11	-	-	-
2600	659	36	0.74	721	38	0.95	776	40	0.96	838	42	1.28	-	-	-
2800	693	40	0.86	756	42	1.11	809	44	1.10	868	46	1.47	-	-	-
3000	728	43	1.01	790	46	1.30	842	48	1.26	898	50	1.69	-	-	-
3200	763	47	1.19	824	49	1.53	875	51	1.45	928	53	1.94	-	-	-
3400	798	50	1.40	859	53	1.79	908	55	1.67	959	57	2.24	-	-	-
3600	833	53	1.64	893	57	2.10	941	59	1.92				-	-	-

Shaded area indicates air flow below 2250 SCFM (300 SCFM/ton) that is not recommended for High Stage cooling or heating.

Valid motor operating range for DDC% setting is 20 - 90.

HORIZONTAL FLOW

CFM	0.2			0.4			0.6			0.8			1.0		
	RPM	DDC %	BHP	RPM	DDC %	BHP	RPM	DDC %	BHP	RPM	DDC %	BHP	RPM	DDC %	BHP
1800	456	21	0.31	541	22	0.38	610	23	0.50	684	25	0.57	-	-	-
2000	486	24	0.37	568	25	0.44	636	27	0.58	706	29	0.64	-	-	-
2200	516	27	0.43	595	29	0.50	661	30	0.66	729	32	0.72	-	-	-
2400	546	31	0.51	622	32	0.58	687	34	0.76	751	36	0.81	-	-	-
2600	576	34	0.59	649	36	0.67	712	38	0.88	774	39	0.91	-	-	-
2800	606	38	0.70	676	39	0.77	737	41	1.01	796	43	1.03	-	-	-
3000	636	41	0.82	703	43	0.88	763	45	1.16	818	47	1.16	-	-	-
3200	666	45	0.96	730	46	1.02	788	48	1.33	841	50	1.31	-	-	-
3400	696	48	1.13	757	50	1.17	814	52	1.53	863	54	1.48	-	-	-
3600	726	52	1.32	784	53	1.34	839	55	1.76	886	57	1.66	-	-	-
3800	756	55	1.55	811	57	1.55	865	59	2.03	908	61	1.88	-	-	-

Shaded area indicates air flow below 2250 SCFM (300 SCFM/ton) that is not recommended for High Stage cooling or heating.

Valid motor operating range for DDC% setting is 20 - 90.

APPENDIX A BLOWER PERFORMANCE DATA

7.5 TON
MODELS : DRG0903L, DRG0904L & DRG0907L WITH DDC CONTROLS
MEDIUM STATIC TO 2.4 HP (0.2 ~ 1.4 ESP)
DOWN FLOW

CFM	0.2			0.4			0.6			0.8			1.0		
	RPM	DDC %	BHP	RPM	DDC %	BHP	RPM	DDC %	BHP	RPM	DDC %	BHP	RPM	DDC %	BHP
1400	449	16	0.28	516	17	0.36	577	18	0.41	656	20	0.55	742	24	0.66
1600	484	19	0.33	550	20	0.42	610	22	0.47	686	24	0.63	767	27	0.73
1800	519	22	0.39	584	24	0.50	643	26	0.55	717	27	0.73	793	31	0.80
2000	554	26	0.46	618	27	0.58	676	29	0.63	747	31	0.84	818	34	0.89
2200	589	29	0.53	653	31	0.69	709	33	0.72	777	35	0.97	844	38	0.98
2400	624	33	0.63	687	35	0.81	743	37	0.83	807	39	1.11	869	41	1.08
2600	659	36	0.74	721	38	0.95	776	40	0.96	838	42	1.28	895	45	1.20
2800	693	40	0.86	756	42	1.11	809	44	1.10	868	46	1.47	920	48	1.32
3000	728	43	1.01	790	46	1.30	842	48	1.26	898	50	1.69	946	52	1.46
3200	763	47	1.19	824	49	1.53	875	51	1.45	928	53	1.94	971	55	1.62
3400	798	50	1.40	859	53	1.79	908	55	1.67	959	57	2.24	997	58	1.79
3600	833	53	1.64	893	57	2.10	941	59	1.92	989	61	2.57	1022	62	1.97
3800	868	57	1.92	927	60	2.47	975	62	2.21	1019	64	2.96	1048	65	2.18
CFM	1.2			1.4			1.6			1.8			2.0		
	RPM	DDC %	BHP	RPM	DDC %	BHP	RPM	DDC %	BHP	RPM	DDC %	BHP	RPM	DDC %	BHP
1400	853	27	0.87	853	29	0.96	-	-	-	-	-	-	-	-	-
1600	871	30	0.96	876	32	1.04	-	-	-	-	-	-	-	-	-
1800	890	34	1.06	899	36	1.12	-	-	-	-	-	-	-	-	-
2000	908	37	1.17	922	39	1.22	-	-	-	-	-	-	-	-	-
2200	926	40	1.30	945	42	1.32	-	-	-	-	-	-	-	-	-
2400	945	44	1.43	968	46	1.43	-	-	-	-	-	-	-	-	-
2600	963	47	1.58	991	49	1.55	-	-	-	-	-	-	-	-	-
2800	981	50	1.75	1015	53	1.68	-	-	-	-	-	-	-	-	-
3000	1000	54	1.94	1038	56	1.82	-	-	-	-	-	-	-	-	-
3200	1018	57	2.14	1061	59	1.97	-	-	-	-	-	-	-	-	-
3400	1036	61	2.36	1084	63	2.13	-	-	-	-	-	-	-	-	-
3600	1055	64	2.61	1107	66	2.31	-	-	-	-	-	-	-	-	-
3800	1073	67	2.89	1130	70	2.50	-	-	-	-	-	-	-	-	-

Shaded area indicates air flow below 2250 SCFM (300 SCFM/ton) that is not recommended for High Stage cooling or heating.
Valid motor operating range for DDC% setting is 20 - 90.

HORIZONTAL FLOW

CFM	0.2			0.4			0.6			0.8			1.0		
	RPM	DDC %	BHP	RPM	DDC %	BHP	RPM	DDC %	BHP	RPM	DDC %	BHP	RPM	DDC %	BHP
1400	396	14	0.23	487	15	0.29	559	16	0.38	639	18	0.44	702	21	0.58
1600	426	17	0.27	514	18	0.33	585	20	0.44	661	22	0.50	724	25	0.64
1800	456	21	0.31	541	22	0.38	610	23	0.50	684	25	0.57	745	28	0.70
2000	486	24	0.37	568	25	0.44	636	27	0.58	706	29	0.64	766	31	0.78
2200	516	27	0.43	595	29	0.50	661	30	0.66	729	32	0.72	787	35	0.86
2400	546	31	0.51	622	32	0.58	687	34	0.76	751	36	0.81	809	38	0.95
2600	576	34	0.59	649	36	0.67	712	38	0.88	774	39	0.91	830	42	1.05
2800	606	38	0.70	676	39	0.77	737	41	1.01	796	43	1.03	851	45	1.16
3000	636	41	0.82	703	43	0.88	763	45	1.16	818	47	1.16	872	49	1.28
3200	666	45	0.96	730	46	1.02	788	48	1.33	841	50	1.31	894	52	1.41
3400	696	48	1.13	757	50	1.17	814	52	1.53	863	54	1.48	915	55	1.56
3600	726	52	1.32	784	53	1.34	839	55	1.76	886	57	1.66	936	59	1.73
3800	756	55	1.55	811	57	1.55	865	59	2.03	908	61	1.88	957	62	1.91
CFM	1.2			1.4			1.6			1.8			2.0		
	RPM	DDC %	BHP	RPM	DDC %	BHP	RPM	DDC %	BHP	RPM	DDC %	BHP	RPM	DDC %	BHP
1400	754	25	0.85	825	27	0.93	-	-	-	-	-	-	-	-	-
1600	774	28	0.93	843	30	1.01	-	-	-	-	-	-	-	-	-
1800	795	31	1.03	862	34	1.10	-	-	-	-	-	-	-	-	-
2000	816	34	1.14	880	37	1.19	-	-	-	-	-	-	-	-	-
2200	836	38	1.26	898	40	1.29	-	-	-	-	-	-	-	-	-
2400	857	41	1.39	917	43	1.39	-	-	-	-	-	-	-	-	-
2600	878	44	1.54	935	46	1.51	-	-	-	-	-	-	-	-	-
2800	899	48	1.70	954	50	1.64	-	-	-	-	-	-	-	-	-
3000	919	51	1.88	972	53	1.77	-	-	-	-	-	-	-	-	-
3200	940	54	2.08	990	56	1.92	-	-	-	-	-	-	-	-	-
3400	961	57	2.30	1009	59	2.08	-	-	-	-	-	-	-	-	-
3600	981	61	2.54	1027	62	2.25	-	-	-	-	-	-	-	-	-
3800	1002	64	2.81	1046	66	2.44	-	-	-	-	-	-	-	-	-

Shaded area indicates air flow below 2250 SCFM (300 SCFM/ton) that is not recommended for High Stage cooling or heating.
Valid motor operating range for DDC% setting is 20 - 90.

APPENDIX A BLOWER PERFORMANCE DATA

MODELS : DRG0903W,DRG0904W & DRG0907W WITH DDC CONTROLS
HIGH STATIC TO 3.5 HP (0.2 ~ 2.0 ESP)
DOWN FLOW

CFM	0.2			0.4			0.6			0.8			1.0		
	RPM	DDC %	BHP	RPM	DDC %	BHP	RPM	DDC %	BHP	RPM	DDC %	BHP	RPM	DDC %	BHP
1800	519	22	0.39	584	24	0.50	643	26	0.55	717	27	0.73	793	31	0.80
2000	554	26	0.46	618	27	0.58	676	29	0.63	747	31	0.84	818	34	0.89
2200	589	29	0.53	653	31	0.69	709	33	0.72	777	35	0.97	844	38	0.98
2400	624	33	0.63	687	35	0.81	743	37	0.83	807	39	1.11	869	41	1.08
2600	659	36	0.74	721	38	0.95	776	40	0.96	838	42	1.28	895	45	1.20
2800	693	40	0.86	756	42	1.11	809	44	1.10	868	46	1.47	920	48	1.32
3000	728	43	1.01	790	46	1.30	842	48	1.26	898	50	1.69	946	52	1.46
3200	763	47	1.19	824	49	1.53	875	51	1.45	928	53	1.94	971	55	1.62
3400	798	50	1.40	859	53	1.79	908	55	1.67	959	57	2.24	997	58	1.79
3600	833	53	1.64	893	57	2.10	941	59	1.92	989	61	2.57	1022	62	1.97
3800	868	57	1.92	927	60	2.47	975	62	2.21	1019	64	2.96	1048	65	2.18
CFM	1.2			1.4			1.6			1.8			2.0		
	RPM	DDC %	BHP	RPM	DDC %	BHP	RPM	DDC %	BHP	RPM	DDC %	BHP	RPM	DDC %	BHP
1800	890	34	1.06	899	36	1.12	1023	39	1.42	1077	41	1.64	1129	44	1.90
2000	908	37	1.17	922	39	1.22	1036	42	1.54	1088	44	1.78	1140	47	2.06
2200	926	40	1.30	945	42	1.32	1048	46	1.66	1099	48	1.93	1151	50	2.23
2400	945	44	1.43	968	46	1.43	1060	49	1.80	1110	51	2.09	1161	53	2.41
2600	963	47	1.58	991	49	1.55	1073	52	1.95	1122	54	2.26	1172	57	2.61
2800	981	50	1.75	1015	53	1.68	1085	55	2.12	1133	58	2.45	1183	60	2.83
3000	1000	54	1.94	1038	56	1.82	1097	58	2.29	1144	61	2.65	1194	63	3.07
3200	1018	57	2.14	1061	59	1.97	1110	62	2.48	1155	64	2.87	1204	67	3.32
3400	1036	61	2.36	1084	63	2.13	1122	65	2.69	1166	67	3.11	1215	70	3.60
3600	1055	64	2.61	1107	66	2.31	1134	68	2.91	1178	71	3.37	1226	73	3.90
3800	1073	67	2.89	1130	70	2.50	1147	71	3.16	1189	74	3.65	1237	77	4.22

Shaded area indicates air flow below 2250 SCFM (300 SCFM/ton) that is not recommended for High Stage cooling or heating.
Valid motor operating range for DDC% setting is 20 - 90.

HORIZONTAL FLOW

CFM	0.2			0.4			0.6			0.8			1.0		
	RPM	DDC %	BHP	RPM	DDC %	BHP	RPM	DDC %	BHP	RPM	DDC %	BHP	RPM	DDC %	BHP
1800	456	21	0.31	541	22	0.38	610	23	0.50	684	25	0.57	745	28	0.70
2000	486	24	0.37	568	25	0.44	636	27	0.58	706	29	0.64	766	31	0.78
2200	516	27	0.43	595	29	0.50	661	30	0.66	729	32	0.72	787	35	0.86
2400	546	31	0.51	622	32	0.58	687	34	0.76	751	36	0.81	809	38	0.95
2600	576	34	0.59	649	36	0.67	712	38	0.88	774	39	0.91	830	42	1.05
2800	606	38	0.70	676	39	0.77	737	41	1.01	796	43	1.03	851	45	1.16
3000	636	41	0.82	703	43	0.88	763	45	1.16	818	47	1.16	872	49	1.28
3200	666	45	0.96	730	46	1.02	788	48	1.33	841	50	1.31	894	52	1.41
3400	696	48	1.13	757	50	1.17	814	52	1.53	863	54	1.48	915	55	1.56
3600	726	52	1.32	784	53	1.34	839	55	1.76	886	57	1.66	936	59	1.73
3800	756	55	1.55	811	57	1.55	865	59	2.03	908	61	1.88	957	62	1.91
CFM	1.2			1.4			1.6			1.8			2.0		
	RPM	DDC %	BHP	RPM	DDC %	BHP	RPM	DDC %	BHP	RPM	DDC %	BHP	RPM	DDC %	BHP
1800	795	31	1.03	862	34	1.10	986	38	1.38	1040	41	1.33	1081	43	1.50
2000	816	34	1.14	880	37	1.19	992	41	1.50	1046	44	1.41	1088	46	1.59
2200	836	38	1.26	898	40	1.29	999	44	1.62	1053	47	1.50	1094	49	1.69
2400	857	41	1.39	917	43	1.39	1005	47	1.76	1059	49	1.59	1100	52	1.80
2600	878	44	1.54	935	46	1.51	1011	50	1.90	1066	52	1.69	1106	54	1.91
2800	899	48	1.70	954	50	1.64	1018	53	2.06	1072	55	1.80	1112	57	2.02
3000	919	51	1.88	972	53	1.77	1024	55	2.23	1079	58	1.91	1119	60	2.15
3200	940	54	2.08	990	56	1.92	1030	58	2.42	1085	60	2.02	1125	62	2.28
3400	961	57	2.30	1009	59	2.08	1037	61	2.62	1091	63	2.15	1131	65	2.42
3600	981	61	2.54	1027	62	2.25	1043	64	2.84	1098	66	2.28	1137	68	2.57
3800	1002	64	2.81	1046	66	2.44	1049	67	3.07	1104	69	2.42	1143	70	2.73

Shaded area indicates air flow below 2250 SCFM (300 SCFM/ton) that is not recommended for High Stage cooling or heating.
Valid motor operating range for DDC% setting is 20 - 90.

APPENDIX A BLOWER PERFORMANCE DATA

8.5 TON

MODELS : DRG1023D,DRG1024D & DRG1027D WITH DDC CONTROL

STANDARD STATIC TO 2.4 HP (0.2 ~ 0.8 ESP)

DOWN FLOW

CFM	0.2			0.4			0.6			0.8			1.0		
	RPM	DDC %	BHP	RPM	DDC %	BHP	RPM	DDC %	BHP	RPM	DDC %	BHP	RPM	DDC %	BHP
1600										678	21	0.55	-	-	-
1800				557	21	0.42	635	23	0.57	702	25	0.62	-	-	-
2000	509	23	0.41	586	25	0.48	661	27	0.66	727	29	0.70	-	-	-
2200	541	26	0.48	615	28	0.55	688	30	0.76	752	32	0.79	-	-	-
2400	572	30	0.56	645	32	0.64	714	34	0.87	776	36	0.89	-	-	-
2600	604	34	0.66	674	36	0.73	740	38	1.00	801	40	1.01	-	-	-
2800	635	37	0.77	703	39	0.84	767	42	1.15	826	44	1.14	-	-	-
3000	667	41	0.91	733	43	0.97	793	45	1.33	850	47	1.28	-	-	-
3200	698	44	1.06	762	47	1.11	820	49	1.52	875	51	1.44	-	-	-
3400	730	48	1.25	791	50	1.28	846	53	1.75	900	55	1.63	-	-	-
3600	761	52	1.47	820	54	1.48	872	57	2.02	924	59	1.83	-	-	-
3800	793	55	1.72	850	58	1.70	899	60	2.32	949	62	2.07	-	-	-

Shaded area indicates air flow below 2550 SCFM (300 SCFM/ton) that is not recommended for High Stage cooling or heating.

Valid motor operating range for DDC% setting is 20 - 90.

HORIZONTAL FLOW

CFM	0.2			0.4			0.6			0.8			1.0		
	RPM	DDC %	BHP	RPM	DDC %	BHP	RPM	DDC %	BHP	RPM	DDC %	BHP	RPM	DDC %	BHP
1600										649	21	0.55	-	-	-
1800	436	20	0.33	521	21	0.41	597	23	0.46	670	25	0.62	-	-	-
2000	463	23	0.39	546	25	0.47	620	27	0.52	691	29	0.69	-	-	-
2200	491	27	0.46	571	28	0.54	642	30	0.59	711	32	0.78	-	-	-
2400	519	30	0.54	596	32	0.62	665	34	0.67	732	36	0.88	-	-	-
2600	547	34	0.63	621	35	0.72	688	37	0.75	753	39	1.00	-	-	-
2800	575	37	0.74	646	39	0.82	710	41	0.85	773	43	1.12	-	-	-
3000	602	40	0.87	671	42	0.95	733	44	0.96	794	46	1.26	-	-	-
3200	630	44	1.02	696	46	1.09	756	48	1.08	815	50	1.43	-	-	-
3400	658	47	1.20	721	49	1.25	778	51	1.21	836	54	1.61	-	-	-
3600	686	51	1.41	746	53	1.44	801	55	1.37	856	57	1.81	-	-	-
3800	714	54	1.65	771	56	1.66	823	58	1.54	877	61	2.04	-	-	-

Shaded area indicates air flow below 2550 SCFM (300 SCFM/ton) that is not recommended for High Stage cooling or heating.

Valid motor operating range for DDC% setting is 20 - 90.

APPENDIX A BLOWER PERFORMANCE DATA

8.5 TON

MODELS : DRG1023L,DRG1024L & DRG1027L WITH DDC CONTROL

MEDIUM STATIC TO 3.5 HP (0.2 ~ 1.4 ESP)

DOWN FLOW

CFM	0.2			0.4			0.6			0.8			1.0		
	RPM	DDC %	BHP	RPM	DDC %	BHP	RPM	DDC %	BHP	RPM	DDC %	BHP	RPM	DDC %	BHP
1600										678	21	0.55	757	23	0.73
1800				557	21	0.42	635	23	0.57	702	25	0.62	778	27	0.82
2000	509	23	0.41	586	25	0.48	661	27	0.66	727	29	0.70	799	31	0.93
2200	541	26	0.48	615	28	0.55	688	30	0.76	752	32	0.79	820	35	1.04
2400	572	30	0.56	645	32	0.64	714	34	0.87	776	36	0.89	841	38	1.18
2600	604	34	0.66	674	36	0.73	740	38	1.00	801	40	1.01	862	42	1.33
2800	635	37	0.77	703	39	0.84	767	42	1.15	826	44	1.14	883	46	1.50
3000	667	41	0.91	733	43	0.97	793	45	1.33	850	47	1.28	904	50	1.69
3200	698	44	1.06	762	47	1.11	820	49	1.52	875	51	1.44	925	54	1.90
3400	730	48	1.25	791	50	1.28	846	53	1.75	900	55	1.63	946	57	2.15
3600	761	52	1.47	820	54	1.48	872	57	2.02	924	59	1.83	967	61	2.42
3800	793	55	1.72	850	58	1.70	899	60	2.32	949	62	2.07	988	65	2.73
CFM	1.2			1.4			1.6			1.8			2.0		
	RPM	DDC %	BHP	RPM	DDC %	BHP	RPM	DDC %	BHP	RPM	DDC %	BHP	RPM	DDC %	BHP
1600	834	25	0.79	799	28	1.04	-	-	-	-	-	-	-	-	-
1800	853	29	0.88	822	32	1.14	-	-	-	-	-	-	-	-	-
2000	873	33	0.97	845	35	1.27	-	-	-	-	-	-	-	-	-
2200	892	37	1.07	868	39	1.40	-	-	-	-	-	-	-	-	-
2400	912	41	1.18	891	42	1.55	-	-	-	-	-	-	-	-	-
2600	932	45	1.31	914	46	1.71	-	-	-	-	-	-	-	-	-
2800	951	49	1.45	937	50	1.89	-	-	-	-	-	-	-	-	-
3000	971	52	1.60	960	53	2.09	-	-	-	-	-	-	-	-	-
3200	991	56	1.77	983	57	2.31	-	-	-	-	-	-	-	-	-
3400	1010	60	1.95	1006	61	2.55	-	-	-	-	-	-	-	-	-
3600	1030	64	2.16	1029	64	2.82	-	-	-	-	-	-	-	-	-
3800	1049	68	2.39	1052	68	3.11	-	-	-	-	-	-	-	-	-

Shaded area indicates air flow below 2550 SCFM (300 SCFM/ton) that is not recommended for High Stage cooling or heating.

Valid motor operating range for DDC% setting is 20 - 90.

HORIZONTAL FLOW

CFM	0.2			0.4			0.6			0.8			1.0		
	RPM	DDC %	BHP	RPM	DDC %	BHP	RPM	DDC %	BHP	RPM	DDC %	BHP	RPM	DDC %	BHP
1600										649	21	0.55	722	23	0.59
1800	436	20	0.33	521	21	0.41	597	23	0.46	670	25	0.62	740	27	0.65
2000	463	23	0.39	546	25	0.47	620	27	0.52	691	29	0.69	758	30	0.72
2200	491	27	0.46	571	28	0.54	642	30	0.59	711	32	0.78	777	34	0.80
2400	519	30	0.54	596	32	0.62	665	34	0.67	732	36	0.88	795	37	0.88
2600	547	34	0.63	621	35	0.72	688	37	0.75	753	39	1.00	814	41	0.97
2800	575	37	0.74	646	39	0.82	710	41	0.85	773	43	1.12	832	45	1.08
3000	602	40	0.87	671	42	0.95	733	44	0.96	794	46	1.26	851	48	1.19
3200	630	44	1.02	696	46	1.09	756	48	1.08	815	50	1.43	869	52	1.31
3400	658	47	1.20	721	49	1.25	778	51	1.21	836	54	1.61	888	56	1.45
3600	686	51	1.41	746	53	1.44	801	55	1.37	856	57	1.81	906	59	1.60
3800	714	54	1.65	771	56	1.66	823	58	1.54	877	61	2.04	925	63	1.77
CFM	1.2			1.4			1.6			1.8			2.0		
	RPM	DDC %	BHP	RPM	DDC %	BHP	RPM	DDC %	BHP	RPM	DDC %	BHP	RPM	DDC %	BHP
1600	787	25	0.76	830	28	0.92	-	-	-	-	-	-	-	-	-
1800	804	28	0.84	847	32	1.00	-	-	-	-	-	-	-	-	-
2000	820	32	0.93	864	35	1.08	-	-	-	-	-	-	-	-	-
2200	837	36	1.02	881	39	1.17	-	-	-	-	-	-	-	-	-
2400	854	40	1.13	898	42	1.27	-	-	-	-	-	-	-	-	-
2600	870	43	1.25	915	46	1.37	-	-	-	-	-	-	-	-	-
2800	887	47	1.38	932	49	1.49	-	-	-	-	-	-	-	-	-
3000	904	51	1.53	949	53	1.61	-	-	-	-	-	-	-	-	-
3200	920	54	1.69	966	56	1.74	-	-	-	-	-	-	-	-	-
3400	937	58	1.87	983	60	1.89	-	-	-	-	-	-	-	-	-
3600	954	62	2.06	1000	63	2.05	-	-	-	-	-	-	-	-	-
3800	971	65	2.28	1017	67	2.22	-	-	-	-	-	-	-	-	-

Shaded area indicates air flow below 2550 SCFM (300 SCFM/ton) that is not recommended for High Stage cooling or heating.

Valid motor operating range for DDC% setting is 20 - 90.

APPENDIX A BLOWER PERFORMANCE DATA

8.5 TON
MODELS : DRG1023W,DRG1024W & DRG1027W WITH DDC CONTROL
HIGH STATIC TO 3.5 HP (0.2 ~ 2.0 ESP)
DOWN FLOW

CFM	0.2			0.4			0.6			0.8			1.0		
	RPM	DDC %	BHP	RPM	DDC %	BHP	RPM	DDC %	BHP	RPM	DDC %	BHP	RPM	DDC %	BHP
1600										678	21	0.55	757	23	0.73
1800				557	21	0.42	635	23	0.57	702	25	0.62	778	27	0.82
2000	509	23	0.41	586	25	0.48	661	27	0.66	727	29	0.70	799	31	0.93
2200	541	26	0.48	615	28	0.55	688	30	0.76	752	32	0.79	820	35	1.04
2400	572	30	0.56	645	32	0.64	714	34	0.87	776	36	0.89	841	38	1.18
2600	604	34	0.66	674	36	0.73	740	38	1.00	801	40	1.01	862	42	1.33
2800	635	37	0.77	703	39	0.84	767	42	1.15	826	44	1.14	883	46	1.50
3000	667	41	0.91	733	43	0.97	793	45	1.33	850	47	1.28	904	50	1.69
3200	698	44	1.06	762	47	1.11	820	49	1.52	875	51	1.44	925	54	1.90
3400	730	48	1.25	791	50	1.28	846	53	1.75	900	55	1.63	946	57	2.15
3600	761	52	1.47	820	54	1.48	872	57	2.02	924	59	1.83	967	61	2.42
3800	793	55	1.72	850	58	1.70	899	60	2.32	949	62	2.07	988	65	2.73
4000	824	59	2.02	879	61	1.95	925	64	2.67	974	66	2.33	1009	69	3.08
4200	856	62	2.37	908	65	2.25	951	68	3.07	998	70	2.63	1030	73	3.47

CFM	1.2			1.4			1.6			1.8			2.0		
	RPM	DDC %	BHP	RPM	DDC %	BHP	RPM	DDC %	BHP	RPM	DDC %	BHP	RPM	DDC %	BHP
1600	834	25	0.79	799	28	1.04	30	30	1.08	945	33	1.29	1006	32	1.39
1800	853	29	0.88	822	32	1.14	34	34	1.17	965	37	1.40	1025	36	1.51
2000	873	33	0.97	845	35	1.27	38	38	1.26	986	40	1.52	1045	40	1.63
2200	892	37	1.07	868	39	1.40	41	41	1.37	1007	44	1.64	1064	44	1.77
2400	912	41	1.18	891	42	1.55	45	45	1.48	1028	47	1.78	1084	48	1.92
2600	932	45	1.31	914	46	1.71	49	49	1.61	1049	51	1.93	1103	52	2.08
2800	951	49	1.45	937	50	1.89	52	52	1.74	1070	55	2.09	1122	57	2.25
3000	971	52	1.60	960	53	2.09	56	56	1.88	1091	58	2.27	1142	61	2.44
3200	991	56	1.77	983	57	2.31	60	60	2.04	1112	62	2.45	1161	65	2.64
3400	1010	60	1.95	1006	61	2.55	63	63	2.21	1133	66	2.66	1180	69	2.86
3600	1030	64	2.16	1029	64	2.82	67	67	2.39	1154	69	2.88	1200	73	3.10
3800	1049	68	2.39	1052	68	3.11	70	70	2.59	1175	73	3.12	1219	78	3.35
4000	1069	72	2.64	1075	71	3.44	74	74	2.81	1196	77	3.38	1239	82	3.63
4200	1089	76	2.91	1098	75	3.80	78	78	3.04						

Shaded area indicates air flow below 2550 SCFM (300 SCFM/ton) that is not recommended for High Stage cooling or heating.
Valid motor operating range for DDC% setting is 20 - 90.

HORIZONTAL FLOW

CFM	0.2			0.4			0.6			0.8			1.0		
	RPM	DDC %	BHP	RPM	DDC %	BHP	RPM	DDC %	BHP	RPM	DDC %	BHP	RPM	DDC %	BHP
1600										649	21	0.55	722	23	0.59
1800	436	20	0.33	521	21	0.41	597	23	0.46	670	25	0.62	740	27	0.65
2000	463	23	0.39	546	25	0.47	620	27	0.52	691	29	0.69	758	30	0.72
2200	491	27	0.46	571	28	0.54	642	30	0.59	711	32	0.78	777	34	0.80
2400	519	30	0.54	596	32	0.62	665	34	0.67	732	36	0.88	795	37	0.88
2600	547	34	0.63	621	35	0.72	688	37	0.75	753	39	1.00	814	41	0.97
2800	575	37	0.74	646	39	0.82	710	41	0.85	773	43	1.12	832	45	1.08
3000	602	40	0.87	671	42	0.95	733	44	0.96	794	46	1.26	851	48	1.19
3200	630	44	1.02	696	46	1.09	756	48	1.08	815	50	1.43	869	52	1.31
3400	658	47	1.20	721	49	1.25	778	51	1.21	836	54	1.61	888	56	1.45
3600	686	51	1.41	746	53	1.44	801	55	1.37	856	57	1.81	906	59	1.60
3800	714	54	1.65	771	56	1.66	823	58	1.54	877	61	2.04	925	63	1.77
4000	741	58	1.94	797	60	1.91	846	62	1.74	898	64	2.30	943	67	1.96
4200	769	61	2.27	822	63	2.19	869	65	1.96	918	68	2.60	962	70	2.17

CFM	1.2			1.4			1.6			1.8			2.0		
	RPM	DDC %	BHP	RPM	DDC %	BHP	RPM	DDC %	BHP	RPM	DDC %	BHP	RPM	DDC %	BHP
1600	787	25	0.76	830	28	0.92	908	31	1.24	950	33	1.27	978	36	1.59
1800	804	28	0.84	847	32	1.00	922	35	1.35	964	37	1.35	993	39	1.69
2000	820	32	0.93	864	35	1.08	936	38	1.46	978	40	1.43	1009	42	1.79
2200	837	36	1.02	881	39	1.17	950	42	1.58	992	44	1.52	1024	46	1.90
2400	854	40	1.13	898	42	1.27	964	45	1.71	1006	47	1.62	1039	49	2.02
2600	870	43	1.25	915	46	1.37	977	48	1.85	1020	51	1.72	1054	53	2.15
2800	887	47	1.38	932	49	1.49	991	52	2.01	1033	54	1.82	1069	56	2.28
3000	904	51	1.53	949	53	1.61	1005	55	2.17	1047	58	1.93	1084	60	2.42
3200	920	54	1.69	966	56	1.74	1019	59	2.36	1061	61	2.05	1099	63	2.57
3400	937	58	1.87	983	60	1.89	1033	62	2.55	1075	65	2.18	1115	67	2.73
3600	954	62	2.06	1000	63	2.05	1047	66	2.76	1089	68	2.32	1130	70	2.90
3800	971	65	2.28	1017	67	2.22	1060	69	2.99	1103	71	2.46	1145	74	3.08
4000	987	69	2.52	1034	70	2.40	1074	73	3.24	1116	75	2.61	1160	77	3.27
4200	1004	73	2.78	1051	74	2.60	1088	76	3.51	1130	78	2.77	1175	80	3.47

Shaded area indicates air flow below 2550 SCFM (300 SCFM/ton) that is not recommended for High Stage cooling or heating.
Valid motor operating range for DDC% setting is 20 - 90.

APPENDIX A BLOWER PERFORMANCE DATA

10 TON

MODELS : DRG1203D, DRG1204D & DRG1207D WITH DDC CONTROL

STANDARD STATIC TO 2.4HP (0.2 ~ 0.8 ESP)

DOWN FLOW

CFM	0.2			0.4			0.6			0.8			1.0		
	RPM	DDC %	BHP	RPM	DDC %	BHP	RPM	DDC %	BHP	RPM	DDC %	BHP	RPM	DDC %	BHP
2000				582	20	0.55	644	20	0.65	712	21	0.81	-	-	-
2200	533	21	0.43	610	24	0.62	671	25	0.73	737	26	0.91	-	-	-
2400	563	25	0.49	638	28	0.70	699	29	0.82	763	30	1.03	-	-	-
2600	593	29	0.55	666	32	0.79	726	33	0.93	789	35	1.16	-	-	-
2800	622	32	0.62	694	36	0.89	754	37	1.05	814	39	1.31	-	-	-
3000	652	36	0.70	723	40	1.00	781	42	1.18	840	44	1.47	-	-	-
3200	681	40	0.79	751	44	1.13	809	46	1.33	866	48	1.66	-	-	-
3400	711	44	0.89	779	48	1.27	836	50	1.50	891	52	1.87	-	-	-
3600	740	48	1.00	807	52	1.43	864	54	1.69	917	57	2.11	-	-	-
3800	770	52	1.13	835	56	1.61	891	59	1.90	943	61	2.38	-	-	-
4000	800	56	1.27	863	60	1.82	919	63	2.15				-	-	-
4200	829	60	1.44	892	64	2.05							-	-	-

Shaded area indicates air flow below 3000 SCFM (300 SCFM/ton) that is not recommended for High Stage cooling or heating.

Valid motor operating range for DDC% setting is 20 - 90.

HORIZONTAL FLOW

CFM	0.2			0.4			0.6			0.8			1.0		
	RPM	DDC %	BHP	RPM	DDC %	BHP	RPM	DDC %	BHP	RPM	DDC %	BHP	RPM	DDC %	BHP
2000							607	20	0.60	22	685	0.64	-	-	-
2200	473	19	0.42	552	21	0.48	628	24	0.68	26	704	0.71	-	-	-
2400	499	23	0.49	576	25	0.54	650	28	0.77	30	723	0.78	-	-	-
2600	525	27	0.56	600	29	0.61	671	32	0.86	34	742	0.87	-	-	-
2800	551	31	0.65	623	33	0.69	693	35	0.97	38	762	0.96	-	-	-
3000	578	35	0.74	647	37	0.77	714	39	1.10	42	781	1.06	-	-	-
3200	604	39	0.85	671	41	0.87	736	43	1.24	46	800	1.17	-	-	-
3400	630	43	0.98	695	45	0.98	757	47	1.40	50	819	1.29	-	-	-
3600	656	47	1.13	719	49	1.11	779	51	1.57	54	839	1.43	-	-	-
3800	682	51	1.30	743	53	1.25	800	55	1.78	58	858	1.58	-	-	-
4000	708	55	1.49	767	57	1.41	822	59	2.00	62	877	1.75	-	-	-
4200	734	59	1.72	791	61	1.59	843	63	2.26	66	896	1.93	-	-	-

Shaded area indicates air flow below 3000 SCFM (300 SCFM/ton) that is not recommended for High Stage cooling or heating.

Valid motor operating range for DDC% setting is 20 - 90.

APPENDIX A BLOWER PERFORMANCE DATA

10 TON
MODELS : DRG1203L, DRG1204L & DRG1207L WITH DDC CONTROL
MEDIUM STATIC TO 3.5HP (0.2 ~ 1.4 ESP)
DOWN FLOW

CFM	0.2			0.4			0.6			0.8			1.0		
	RPM	DDC %	BHP	RPM	DDC %	BHP	RPM	DDC %	BHP	RPM	DDC %	BHP	RPM	DDC %	BHP
1800													765	21	0.87
2000	504	17	0.38	582	20	0.55	644	20	0.65	712	21	0.81	788	25	0.97
2200	533	21	0.43	610	24	0.62	671	25	0.73	737	26	0.91	810	30	1.07
2400	563	25	0.49	638	28	0.70	699	29	0.82	763	30	1.03	833	34	1.18
2600	593	29	0.55	666	32	0.79	726	33	0.93	789	35	1.16	856	38	1.30
2800	622	32	0.62	694	36	0.89	754	37	1.05	814	39	1.31	878	42	1.44
3000	652	36	0.70	723	40	1.00	781	42	1.18	840	44	1.47	901	47	1.59
3200	681	40	0.79	751	44	1.13	809	46	1.33	866	48	1.66	923	51	1.76
3400	711	44	0.89	779	48	1.27	836	50	1.50	891	52	1.87	946	55	1.95
3600	740	48	1.00	807	52	1.43	864	54	1.69	917	57	2.11	969	59	2.15
3800	770	52	1.13	835	56	1.61	891	59	1.90	943	61	2.38	991	64	2.38
4000	800	56	1.27	863	60	1.82	919	63	2.15	968	66	2.68	1014	68	2.63
4200	829	60	1.44	892	64	2.05	946	67	2.42	994	70	3.02	1037	72	2.90
4400	859	64	1.62	920	68	2.31	974	72	2.73	1020	75	3.41	1059	77	3.21
4600	888	68	1.82	948	72	2.61	1001	76	3.08	1045					
4800	918	71	2.06	976	76	2.94	1029	80	3.47	1071					
5000	947	75	2.32	1004	80	3.32									

CFM	1.2			1.4			1.6			1.8			2.0		
	RPM	DDC %	BHP	RPM	DDC %	BHP	RPM	DDC %	BHP	RPM	DDC %	BHP	RPM	DDC %	BHP
1800	867	27	1.00	887	31	1.26	-	-	-	-	-	-	-	-	-
2000	885	31	1.09	906	35	1.37	-	-	-	-	-	-	-	-	-
2200	903	35	1.18	926	38	1.48	-	-	-	-	-	-	-	-	-
2400	921	39	1.28	945	42	1.61	-	-	-	-	-	-	-	-	-
2600	939	43	1.38	965	46	1.74	-	-	-	-	-	-	-	-	-
2800	956	47	1.50	985	50	1.89	-	-	-	-	-	-	-	-	-
3000	974	51	1.62	1004	54	2.04	-	-	-	-	-	-	-	-	-
3200	992	55	1.76	1024	58	2.21	-	-	-	-	-	-	-	-	-
3400	1010	59	1.90	1044	62	2.40	-	-	-	-	-	-	-	-	-
3600	1028	63	2.06	1063	66	2.60	-	-	-	-	-	-	-	-	-
3800	1046	67	2.23	1083	70	2.81	-	-	-	-	-	-	-	-	-
4000	1064	71	2.42	1103	73	3.05	-	-	-	-	-	-	-	-	-
4200	1082	75	2.62	1122	77	3.30	-	-	-	-	-	-	-	-	-
4400	1099	79	2.84				-	-	-	-	-	-	-	-	-
4600	1117	83	3.08				-	-	-	-	-	-	-	-	-
4800	1135	87	3.33				-	-	-	-	-	-	-	-	-
5000							-	-	-	-	-	-	-	-	-

Shaded area indicates air flow below 3000 SCFM (300 SCFM/ton) that is not recommended for High Stage cooling or heating.
Valid motor operating range for DDC% setting is 20 - 90.

HORIZONTAL FLOW

CFM	0.2			0.4			0.6			0.8			1.0		
	RPM	DDC %	BHP	RPM	DDC %	BHP	RPM	DDC %	BHP	RPM	DDC %	BHP	RPM	DDC %	BHP
1800													740	21	0.85
2000	447	15	0.37	528	17	0.42	20	20	0.60	685	22	0.64	758	25	0.94
2200	473	19	0.42	552	21	0.48	24	24	0.68	704	26	0.71	775	29	1.04
2400	499	23	0.49	576	25	0.54	28	28	0.77	723	30	0.78	792	33	1.15
2600	525	27	0.56	600	29	0.61	32	32	0.86	742	34	0.87	809	37	1.27
2800	551	31	0.65	623	33	0.69	35	35	0.97	762	38	0.96	827	41	1.41
3000	578	35	0.74	647	37	0.77	39	39	1.10	781	42	1.06	844	45	1.56
3200	604	39	0.85	671	41	0.87	43	43	1.24	800	46	1.17	861	49	1.72
3400	630	43	0.98	695	45	0.98	47	47	1.40	819	50	1.29	879	53	1.90
3600	656	47	1.13	719	49	1.11	51	51	1.57	839	54	1.43	896	56	2.10
3800	682	51	1.30	743	53	1.25	55	55	1.78	858	58	1.58	913	60	2.32
4000	708	55	1.49	767	57	1.41	59	59	2.00	877	62	1.75	931	64	2.56
4200	734	59	1.72	791	61	1.59	63	63	2.26	896	66	1.93	948	68	2.83
4400	760	63	1.98	814	65	1.79	67	67	2.54	916	70	2.13	965	72	3.13
4600	786	67	2.28	838	69	2.02	71	71	2.87	935	74	2.36	982	76	3.46
4800	812	71	2.62	862	73	2.28	75	75	3.24	954	78	2.60			
5000	838	75	3.01	886	77	2.57									

CFM	1.2			1.4			1.6			1.8			2.0		
	RPM	DDC %	BHP	RPM	DDC %	BHP	RPM	DDC %	BHP	RPM	DDC %	BHP	RPM	DDC %	BHP
1800	810	24	0.95	848	28	1.29	-	-	-	-	-	-	-	-	-
2000	825	28	1.02	863	32	1.40	-	-	-	-	-	-	-	-	-
2200	841	32	1.11	879	36	1.51	-	-	-	-	-	-	-	-	-
2400	856	36	1.20	895	40	1.64	-	-	-	-	-	-	-	-	-
2600	871	39	1.30	910	43	1.77	-	-	-	-	-	-	-	-	-
2800	886	43	1.41	926	47	1.92	-	-	-	-	-	-	-	-	-
3000	902	47	1.53	942	51	2.08	-	-	-	-	-	-	-	-	-
3200	917	51	1.66	957	55	2.26	-	-	-	-	-	-	-	-	-
3400	932	55	1.79	973	58	2.44	-	-	-	-	-	-	-	-	-
3600	948	59	1.94	989	62	2.65	-	-	-	-	-	-	-	-	-
3800	963	63	2.11	1004	66	2.87	-	-	-	-	-	-	-	-	-
4000	978	67	2.28	1020	70	3.11	-	-	-	-	-	-	-	-	-
4200	994	71	2.47	1036	74	3.37	-	-	-	-	-	-	-	-	-
4400	1009	75	2.68				-	-	-	-	-	-	-	-	-
4600	1024	78	2.90				-	-	-	-	-	-	-	-	-
4800							-	-	-	-	-	-	-	-	-
5000							-	-	-	-	-	-	-	-	-

Shaded area indicates air flow below 3000 SCFM (300 SCFM/ton) that is not recommended for High Stage cooling or heating.
Valid motor operating range for DDC% setting is 20 - 90.

APPENDIX A BLOWER PERFORMANCE DATA

10 TON
MODELS : DRG1203W, DRG1204W & DRG1207W WITH DDC CONTROL
MEDIUM STATIC TO 5.0 HP (0.2 ~ 2.0 ESP)
DOWN FLOW

CFM	0.2			0.4			0.6			0.8			1.0		
	RPM	DDC %	BHP	RPM	DDC %	BHP	RPM	DDC %	BHP	RPM	DDC %	BHP	RPM	DDC %	BHP
1800															
2000	492	20	0.40	538	9	0.48	629	14	0.68	713	17	0.80	772	21	0.79
2200	522	23	0.46	569	13	0.54	657	19	0.76	738	22	0.91	796	25	0.87
2400	552	27	0.53	600	18	0.61	684	23	0.86	763	26	1.02	820	29	0.96
2600	583	30	0.61	631	22	0.69	712	27	0.97	787	30	1.15	844	34	1.06
2800	613	33	0.71	662	27	0.78	740	32	1.10	812	35	1.30	867	38	1.18
3000	643	37	0.81	693	32	0.87	768	36	1.23	837	39	1.47	891	42	1.30
3200	673	40	0.93	724	36	0.99	796	40	1.39	862	43	1.65	915	46	1.44
3400	704	44	1.07	755	41	1.11	823	45	1.57	886	48	1.86	938	51	1.59
3600	734	47	1.24	786	45	1.25	851	49	1.77	911	52	2.10	962	55	1.76
3800	764	51	1.42	817	50	1.41	879	53	2.00	936	56	2.37	986	59	1.94
4000	794	54	1.63	847	55	1.59	907	58	2.25	961	61	2.67	1009	63	2.14
4200	825	57	1.88	878	59	1.80	935	62	2.54	985	65	3.01	1033	68	2.37
4400	855	61	2.16	909	64	2.03	962	66	2.86	1010	69	3.40	1057	72	2.62
4600	885	64	2.49	940	68	2.28	990	71	3.22	1035	74	3.83	1080	76	2.89
4800	915	68	2.86	971	73	2.58	1018	75	3.64	1060	78	4.32	1104	80	3.20
5000	945	71	3.29	1002	78	2.90	1046	80	4.10	1084	82	4.87	1128	85	3.54
CFM	1.2			1.4			1.6			1.8			2.0		
	RPM	DDC %	BHP	RPM	DDC %	BHP	RPM	DDC %	BHP	RPM	DDC %	BHP	RPM	DDC %	BHP
1800	855	24	1.04	947	29	1.15	962	28	1.16	985	31	1.21	1056	33	1.42
2000	874	28	1.14	961	33	1.25	978	32	1.26	1003	34	1.31	1071	37	1.54
2200	892	32	1.26	976	37	1.35	995	36	1.36	1021	38	1.42	1085	41	1.66
2400	911	35	1.40	991	40	1.47	1012	40	1.47	1038	42	1.54	1100	45	1.80
2600	930	39	1.54	1006	44	1.59	1028	44	1.60	1056	46	1.67	1115	49	1.95
2800	949	43	1.71	1020	48	1.72	1045	48	1.73	1074	50	1.81	1130	52	2.12
3000	968	47	1.89	1035	51	1.86	1061	52	1.87	1092	54	1.96	1145	56	2.29
3200	987	51	2.09	1050	55	2.02	1078	56	2.03	1109	58	2.12	1160	60	2.48
3400	1005	55	2.30	1064	58	2.19	1095	60	2.20	1127	62	2.30	1175	64	2.69
3600	1024	59	2.55	1079	62	2.37	1111	63	2.38	1145	66	2.49	1190	68	2.91
3800	1043	63	2.81	1094	66	2.57	1128	67	2.58	1163	70	2.69	1205	72	3.16
4000	1062	67	3.11	1109	69	2.78	1145	71	2.79	1180	73	2.92	1220	75	3.42
4200	1081	70	3.44	1123	73	3.01	1161	75	3.03	1198	77	3.16	1235	79	3.70
4400	1100	74	3.80	1138	77	3.26	1178	79	3.28	1216	81	3.42	1250	83	4.01
4600	1118	78	4.20	1153	80	3.53	1194	83	3.55	1234	85	3.71	1264	87	4.35
4800	1137	82	4.64	1167	84	3.83	1211	87	3.85	1251	89	4.02	1279	91	4.71
5000	1156	86	5.13	1182	88	4.15	1228	91	4.17	1269	93	4.35			

Shaded area indicates air flow below 3000 SCFM (300 SCFM/ton) that is not recommended for High Stage cooling or heating.
Valid motor operating range for DDC% setting is 20 - 90.

HORIZONTAL FLOW

CFM	0.2			0.4			0.6			0.8			1.0		
	RPM	DDC %	BHP	RPM	DDC %	BHP	RPM	DDC %	BHP	RPM	DDC %	BHP	RPM	DDC %	BHP
1800										662	21	0.64	752	25	0.82
2000	445	18	0.33	509	17	0.50	606	21	0.55	681	24	0.70	769	28	0.91
2200	471	22	0.37	534	20	0.56	629	24	0.61	701	28	0.78	786	32	1.00
2400	497	25	0.42	560	24	0.63	651	28	0.67	721	32	0.86	804	35	1.11
2600	522	29	0.47	585	28	0.72	673	32	0.74	741	35	0.95	821	39	1.22
2800	548	32	0.53	610	32	0.81	695	36	0.82	761	39	1.05	838	42	1.35
3000	574	36	0.60	636	36	0.91	717	39	0.91	781	42	1.16	855	46	1.49
3200	600	39	0.68	661	40	1.03	739	43	1.00	801	46	1.28	873	49	1.65
3400	625	43	0.77	686	44	1.16	761	47	1.11	821	50	1.42	890	53	1.83
3600	651	47	0.86	712	47	1.30	783	51	1.23	841	53	1.56	907	56	2.02
3800	677	50	0.97	737	51	1.47	805	54	1.35	861	57	1.73	924	60	2.23
4000	703	54	1.10	762	55	1.66	827	58	1.50	881	60	1.91	941	63	2.46
4200	728	57	1.24	787	59	1.87	849	62	1.65	901	64	2.11	959	67	2.72
4400	754	61	1.40	813	63	2.11	871	66	1.83	921	68	2.33	976	70	3.01
4600	780	64	1.57	838	67	2.38	893	69	2.02	941	71	2.58	993	74	3.33
4800	806	68	1.77	863	70	2.68	916	73	2.23	961	75	2.85	1010	77	3.68
5000	831	72	2.00	889	74	3.02	938	77	2.47	981	78	3.15	1028	81	4.06
CFM	1.2			1.4			1.6			1.8			2.0		
	RPM	DDC %	BHP	RPM	DDC %	BHP	RPM	DDC %	BHP	RPM	DDC %	BHP	RPM	DDC %	BHP
1800	860	31	0.96	942	29	1.24	1012	33	1.45	1050	37	1.60	1105	40	1.63
2000	873	35	1.04	952	33	1.34	1021	37	1.58	1059	40	1.73	1111	43	1.73
2200	886	38	1.13	963	36	1.45	1030	40	1.71	1067	43	1.88	1116	46	1.84
2400	900	41	1.22	973	40	1.57	1039	43	1.85	1076	47	2.03	1122	50	1.95
2600	913	44	1.32	983	43	1.70	1049	47	2.00	1084	50	2.20	1127	53	2.07
2800	926	47	1.43	993	47	1.84	1058	50	2.17	1093	53	2.39	1133	56	2.20
3000	940	50	1.55	1003	50	2.00	1067	54	2.35	1101	56	2.59	1139	59	2.34
3200	953	54	1.68	1013	54	2.16	1076	57	2.55	1110	60	2.80	1144	62	2.48
3400	966	57	1.82	1023	57	2.34	1085	60	2.76	1118	63	3.03	1150	66	2.64
3600	980	60	1.98	1033	61	2.54	1094	64	2.99	1127	66	3.29	1155	69	2.80
3800	993	63	2.14	1043	64	2.75	1103	67	3.24	1135	69	3.56	1161	72	2.97
4000	1006	66	2.32	1053	68	2.98	1112	70	3.51	1144	73	3.86	1166	75	3.16
4200	1019	70	2.51	1063	71	3.23	1122	74	3.80	1152	76	4.18	1172	78	3.35
4400	1033	73	2.72	1073	75	3.49	1131	77	4.12	1161	79	4.53	1177	82	3.56
4600	1046	76	2.95	1083	78	3.79	1140	81	4.46	1169	83	4.90	1183	85	3.78
4800	1059	79	3.19	1094	82	4.10	1149	84	4.83	1178	86	5.31	1188	88	4.01
5000	1073	82	3.46	1104	85	4.44	1158	87	5.23	1186	89	5.76	1194	91	4.26

Shaded area indicates air flow below 3000 SCFM (300 SCFM/ton) that is not recommended for High Stage cooling or heating.
Valid motor operating range for DDC% setting is 20 - 90.

APPENDIX A BLOWER PERFORMANCE DATA

12.5 TON

MODELS : DRG1503D, DRG1504D & DRG1507D WITH DDC CONTROL

STANDARD STATIC TO 3.5HP (0.2 ~ 0.8 ESP)

DOWN FLOW

CFM	0.2			0.4			0.6			0.8			1.0		
	RPM	DDC %	BHP	RPM	DDC %	BHP	RPM	DDC %	BHP	RPM	DDC %	BHP	RPM	DDC %	BHP
2000							601	20	0.62	677	22	0.67	-	-	-
2200	537	21	0.51	595	23	0.66	627	24	0.70	700	27	0.75	-	-	-
2400	561	25	0.58	620	27	0.75	653	28	0.79	724	31	0.85	-	-	-
2600	585	29	0.65	644	31	0.84	680	33	0.89	747	35	0.96	-	-	-
2800	610	33	0.74	668	35	0.95	706	37	1.00	770	39	1.08	-	-	-
3000	634	37	0.83	692	39	1.07	733	41	1.13	793	43	1.22	-	-	-
3200	658	41	0.93	717	43	1.21	759	45	1.28	817	47	1.37	-	-	-
3400	682	45	1.05	741	47	1.36	786	49	1.44	840	51	1.55	-	-	-
3600	707	49	1.19	765	52	1.54	812	54	1.62	863	56	1.74	-	-	-
3800	731	54	1.34	789	56	1.73	838	58	1.83	886	60	1.97	-	-	-
4000	755	58	1.51	814	60	1.96	865	62	2.06	909	64	2.22	-	-	-
4200	779	62	1.70	838	64	2.20	891	66	2.33	933	68	2.50	-	-	-
4400	804	66	1.92	862	68	2.49	918	70	2.62	956	72	2.82	-	-	-
4600	828	70	2.16	886	72	2.80	944	75	2.96	979	76	3.18	-	-	-

Shaded area indicates air flow below 3750 SCFM (300 SCFM/ton) that is not recommended for High Stage cooling or heating.

Valid motor operating range for DDC% setting is 20 - 90.

HORIZONTAL FLOW

CFM	0.2			0.4			0.6			0.8			1.0		
	RPM	DDC %	BHP	RPM	DDC %	BHP	RPM	DDC %	BHP	RPM	DDC %	BHP	RPM	DDC %	BHP
2000													-	-	-
2200										691	22	0.70	-	-	-
2400	520	23	0.57	577	18	0.62	653	24	0.66	713	26	0.77	-	-	-
2600	547	27	0.65	603	23	0.70	677	29	0.73	736	31	0.85	-	-	-
2800	574	31	0.73	630	28	0.79	700	33	0.81	759	35	0.94	-	-	-
3000	601	36	0.82	657	33	0.89	724	38	0.89	781	40	1.04	-	-	-
3200	629	40	0.93	683	38	1.00	748	42	0.99	804	45	1.15	-	-	-
3400	656	44	1.05	710	43	1.13	772	47	1.09	827	49	1.27	-	-	-
3600	683	48	1.18	736	48	1.27	796	51	1.21	849	54	1.41	-	-	-
3800	710	53	1.33	763	52	1.43	820	56	1.33	872	58	1.56	-	-	-
4000	737	57	1.50	789	57	1.62	844	60	1.47	895	63	1.72	-	-	-
4200	764	61	1.69	816	62	1.82	868	65	1.63	917	67	1.90	-	-	-
4400	791	66	1.91	842	67	2.06	892	70	1.80	940	72	2.10	-	-	-
4600	819	70	2.15	869	72	2.32	916	74	1.99	963	76	2.32	-	-	-
4800	846	74	2.42	896	77	2.61	940	79	2.20	985	81	2.57	-	-	-

Shaded area indicates air flow below 3750 SCFM (300 SCFM/ton) that is not recommended for High Stage cooling or heating.

Valid motor operating range for DDC% setting is 20 - 90.

APPENDIX A BLOWER PERFORMANCE DATA

12.5 TON
MODELS : DRG1503L, DRG1504L & DRG1507L WITH DDC CONTROL
MEDIUM STATIC TO 3.5HP (0.2 ~ 1.4 ESP)
DOWN FLOW

CFM	0.2			0.4			0.6			0.8			1.0		
	RPM	DDC %	BHP	RPM	DDC %	BHP	RPM	DDC %	BHP	RPM	DDC %	BHP	RPM	DDC %	BHP
2200	537	21	0.51	595	23	0.66	627	24	0.70	700	27	0.76	764	29	0.87
2400	561	25	0.58	620	27	0.75	653	28	0.79	724	31	0.84	785	33	0.96
2600	585	29	0.65	644	31	0.84	680	33	0.89	747	35	0.93	806	37	1.06
2800	610	33	0.74	668	35	0.95	706	37	1.00	770	39	1.03	827	41	1.18
3000	634	37	0.83	692	39	1.07	733	41	1.13	793	43	1.14	848	45	1.30
3200	658	41	0.93	717	43	1.21	759	45	1.28	817	47	1.26	869	49	1.44
3400	682	45	1.05	741	47	1.36	786	49	1.44	840	51	1.39	890	53	1.59
3600	707	49	1.19	765	52	1.54	812	54	1.62	863	56	1.54	911	58	1.76
3800	731	54	1.34	789	56	1.73	838	58	1.83	886	60	1.70	932	62	1.94
4000	755	58	1.51	814	60	1.96	865	62	2.06	909	64	1.88	953	66	2.14
4200	779	62	1.70	838	64	2.20	891	66	2.33	933	68	2.08	974	70	2.37
4400	804	66	1.92	862	68	2.49	918	70	2.62	956	72	2.30	995	74	2.62
4600	828	70	2.16	886	72	2.80	944	75	2.96	979	76	2.54	1016	78	2.89
4800	852	74	2.44	911	76	3.16	970	79	3.33	1002	80	2.80	1037	82	3.20
5000	876	78	2.75												
CFM	1.2			1.4			1.6			1.8			2.0		
	RPM	DDC %	BHP	RPM	DDC %	BHP	RPM	DDC %	BHP	RPM	DDC %	BHP	RPM	DDC %	BHP
2200	825	31	1.09	938	42	0.93	-	-	-	-	-	-	-	-	-
2400	844	35	1.20	949	45	1.20	-	-	-	-	-	-	-	-	-
2600	863	39	1.33	961	48	1.33	-	-	-	-	-	-	-	-	-
2800	883	43	1.47	972	51	1.47	-	-	-	-	-	-	-	-	-
3000	902	48	1.62	984	54	1.62	-	-	-	-	-	-	-	-	-
3200	921	52	1.79	996	57	1.79	-	-	-	-	-	-	-	-	-
3400	940	56	1.98	1007	60	1.98	-	-	-	-	-	-	-	-	-
3600	959	60	2.19	1019	63	2.19	-	-	-	-	-	-	-	-	-
3800	978	64	2.42	1030	66	2.42	-	-	-	-	-	-	-	-	-
4000	997	68	2.67	1042	69	2.67	-	-	-	-	-	-	-	-	-
4200	1016	72	2.96	1054	72	2.96	-	-	-	-	-	-	-	-	-
4400	1036	76	3.27	1065	75	3.27	-	-	-	-	-	-	-	-	-
4600							-	-	-	-	-	-	-	-	-
4800							-	-	-	-	-	-	-	-	-
5000							-	-	-	-	-	-	-	-	-

Shaded area indicates air flow below 3750 SCFM (300 SCFM/ton) that is not recommended for High Stage cooling or heating.
Valid motor operating range for DDC% setting is 20 - 90.

HORIZONTAL FLOW

CFM	0.2			0.4			0.6			0.8			1.0		
	RPM	DDC %	BHP	RPM	DDC %	BHP	RPM	DDC %	BHP	RPM	DDC %	BHP	RPM	DDC %	BHP
2200	493	18	0.51	550	13	0.55	629	19	0.60	691	22	0.70	750	23	0.83
2400	520	23	0.57	577	18	0.62	653	24	0.66	713	26	0.77	771	28	0.91
2600	547	27	0.65	603	23	0.70	677	29	0.73	736	31	0.85	793	32	1.01
2800	574	31	0.73	630	28	0.79	700	33	0.81	759	35	0.94	814	37	1.12
3000	601	36	0.82	657	33	0.89	724	38	0.89	781	40	1.04	835	42	1.23
3200	629	40	0.93	683	38	1.00	748	42	0.99	804	45	1.15	857	46	1.36
3400	656	44	1.05	710	43	1.13	772	47	1.09	827	49	1.27	878	51	1.51
3600	683	48	1.18	736	48	1.27	796	51	1.21	849	54	1.41	900	55	1.67
3800	710	53	1.33	763	52	1.43	820	56	1.33	872	58	1.56	921	60	1.84
4000	737	57	1.50	789	57	1.62	844	60	1.47	895	63	1.72	942	65	2.03
4200	764	61	1.69	816	62	1.82	868	65	1.63	917	67	1.90	964	69	2.25
4400	791	66	1.91	842	67	2.06	892	70	1.80	940	72	2.10	985	74	2.48
4600	819	70	2.15	869	72	2.32	916	74	1.99	963	76	2.32	1006	78	2.75
4800	846	74	2.42	896	77	2.61	940	79	2.20	985	81	2.57	1028	83	3.03
5000	873	79	2.73	922	82	2.95	964	83	2.43	1008	85	2.84	1049	87	3.35
CFM	1.2			1.4			1.6			1.8			2.0		
	RPM	DDC %	BHP	RPM	DDC %	BHP	RPM	DDC %	BHP	RPM	DDC %	BHP	RPM	DDC %	BHP
2200	804	28	1.06	862	27	1.24	-	-	-	-	-	-	-	-	-
2400	825	32	1.17	881	32	1.37	-	-	-	-	-	-	-	-	-
2600	845	36	1.29	900	37	1.52	-	-	-	-	-	-	-	-	-
2800	866	41	1.42	919	41	1.68	-	-	-	-	-	-	-	-	-
3000	887	45	1.57	938	46	1.85	-	-	-	-	-	-	-	-	-
3200	907	49	1.74	957	51	2.05	-	-	-	-	-	-	-	-	-
3400	928	54	1.92	976	55	2.26	-	-	-	-	-	-	-	-	-
3600	948	58	2.13	995	60	2.50	-	-	-	-	-	-	-	-	-
3800	969	62	2.35	1013	65	2.76	-	-	-	-	-	-	-	-	-
4000	989	66	2.60	1032	69	3.05	-	-	-	-	-	-	-	-	-
4200	1010	71	2.87	1051	74	3.38	-	-	-	-	-	-	-	-	-
4400	1030	75	3.17				-	-	-	-	-	-	-	-	-
4600	1051	79	3.50				-	-	-	-	-	-	-	-	-
4800							-	-	-	-	-	-	-	-	-
5000							-	-	-	-	-	-	-	-	-

Shaded area indicates air flow below 3750 SCFM (300 SCFM/ton) that is not recommended for High Stage cooling or heating.
Valid motor operating range for DDC% setting is 20 - 90.

APPENDIX A BLOWER PERFORMANCE DATA

12.5 TON
MODELS : DRG1503W, DRG1504W & DRG1507W WITH DDC CONTROL
MEDIUM STATIC TO 5.0 HP (0.2 ~ 2.0 ESP)
DOWN FLOW

CFM	0.2			0.4			0.6			0.8			1.0		
	RPM	DDC %	BHP	RPM	DDC %	BHP	RPM	DDC %	BHP	RPM	DDC %	BHP	RPM	DDC %	BHP
2400	635	29	0.78	732	33	1.02	812	38	1.06	877	41	1.32	945	43	1.45
2600	667	33	0.89	758	37	1.14	835	41	1.18	898	44	1.46	964	46	1.58
2800	699	37	1.03	785	41	1.29	859	45	1.30	919	47	1.61	982	50	1.71
3000	731	41	1.18	811	44	1.45	882	48	1.44	939	51	1.78	1000	53	1.85
3200	763	45	1.36	838	48	1.64	906	52	1.59	960	54	1.97	1018	57	2.00
3400	795	49	1.56	864	52	1.85	929	55	1.75	980	57	2.18	1036	60	2.17
3600	827	53	1.80	891	55	2.09	953	59	1.94	1001	61	2.40	1055	64	2.35
3800	859	57	2.07	917	59	2.35	976	62	2.14	1021	64	2.66	1073	67	2.55
4000	891	61	2.38	944	62	2.65	1000	65	2.37	1042	67	2.94	1091	70	2.76
4200	923	64	2.74	970	66	2.99	1023	69	2.62	1063	71	3.25	1109	74	2.99
4400	955	68	3.15	997	70	3.37	1047	72	2.89	1083	74	3.59	1128	77	3.24
4600	987	72	3.62	1023	73	3.80	1070	76	3.20	1104	77	3.96	1146	81	3.51
4800	1019	76	4.16	1050	77	4.28	1094	79	3.53	1124	81	4.38	1164	84	3.80
5000	1051	80	4.79	1076	81	4.83	1117	83	3.91	1145	84	4.84	1182	88	4.12
CFM	1.2			1.4			1.6			1.8			2.0		
	RPM	DDC %	BHP	RPM	DDC %	BHP	RPM	DDC %	BHP	RPM	DDC %	BHP	RPM	DDC %	BHP
2400	1010	47	1.84	1065	50	2.10	1102	52	2.13	1159	55	2.30	1193	56	2.70
2600	1027	51	1.99	1081	53	2.28	1121	55	2.31	1179	58	2.49	1213	60	2.93
2800	1044	54	2.16	1097	56	2.47	1139	59	2.51	1199	62	2.70	1233	63	3.17
3000	1061	57	2.34	1112	59	2.68	1158	62	2.71	1219	65	2.93	1252	66	3.43
3200	1077	60	2.53	1128	62	2.90	1176	65	2.94	1240	68	3.17	1272	70	3.72
3400	1094	63	2.74	1144	65	3.14	1195	68	3.18	1260	72	3.44	1291	73	4.03
3600	1111	66	2.97	1159	69	3.40	1213	72	3.45	1280	75	3.72	1311	76	4.37
3800	1128	70	3.22	1175	72	3.68	1232	75	3.74	1300	78	4.03	1331	80	4.73
4000	1145	73	3.49	1191	75	3.99	1250	78	4.05	1321	82	4.37	1350	83	5.12
4200	1161	76	3.78	1206	78	4.32	1269	81	4.39	1341	85	4.73			
4400	1178	79	4.09	1222	81	4.68	1288	85	4.75	1361	89	5.12			
4600	1195	82	4.43	1238	84	5.07									
4800	1212	85	4.80												
5000															

Shaded area indicates air flow below 3750 SCFM (300 SCFM/ton) that is not recommended for High Stage cooling or heating.
Valid motor operating range for DDC% setting is 20 - 90.

HORIZONTAL FLOW

CFM	0.2			0.4			0.6			0.8			1.0		
	RPM	DDC %	BHP	RPM	DDC %	BHP	RPM	DDC %	BHP	RPM	DDC %	BHP	RPM	DDC %	BHP
2400	509	23	0.44	590	24	0.66	674	27	0.86	767	32	0.98	838	28	0.95
2600	534	26	0.49	613	28	0.74	694	31	0.97	782	36	1.08	851	32	1.03
2800	560	30	0.56	635	32	0.83	714	35	1.10	797	39	1.19	865	36	1.12
3000	586	34	0.63	657	36	0.94	734	39	1.23	811	42	1.32	878	40	1.21
3200	612	38	0.71	680	40	1.06	754	42	1.39	826	46	1.46	891	44	1.31
3400	638	42	0.80	702	44	1.19	774	46	1.57	841	49	1.61	904	48	1.42
3600	664	46	0.90	724	48	1.35	793	50	1.77	856	53	1.78	918	52	1.54
3800	690	50	1.01	747	51	1.52	813	54	2.00	870	56	1.97	931	57	1.67
4000	716	53	1.14	769	55	1.71	833	57	2.25	885	60	2.18	944	61	1.80
4200	742	57	1.29	792	59	1.93	853	61	2.54	900	63	2.40	957	65	1.95
4400	768	61	1.45	814	63	2.18	873	65	2.86	915	67	2.66	971	69	2.12
4600	793	65	1.64	836	67	2.45	893	68	3.22	930	70	2.94	984	73	2.29
4800	819	69	1.85	859	71	2.77	913	72	3.64	944	74	3.25	997	77	2.48
5000	845	73	2.08	881	75	3.12	932	76	4.10	959	77	3.59	1010	81	2.69
5200	871	76	2.35	903	78	3.52	952	80	4.62	974	81	3.96	1024	85	2.92
5400	897	80	2.65	926	82	3.97	972	83	5.21	989	84	4.38	1037	89	3.16
5600	923	84	2.99	948	86	4.47	992	87	5.88	1003	87	4.84	1050	93	3.42
CFM	1.2			1.4			1.6			1.8			2.0		
	RPM	DDC %	BHP	RPM	DDC %	BHP	RPM	DDC %	BHP	RPM	DDC %	BHP	RPM	DDC %	BHP
2400	908	38	1.20	979	42	1.45	1053	43	1.59	1114	38	1.86	1134	47	1.87
2600	919	42	1.30	988	45	1.57	1059	47	1.69	1119	42	1.97	1139	50	1.98
2800	929	45	1.41	997	48	1.70	1064	50	1.79	1123	45	2.09	1144	54	2.11
3000	940	48	1.53	1007	51	1.85	1070	53	1.90	1127	48	2.22	1150	57	2.24
3200	951	51	1.66	1016	54	2.00	1075	56	2.02	1131	51	2.36	1155	60	2.37
3400	961	54	1.79	1025	57	2.17	1081	60	2.14	1135	54	2.51	1161	64	2.52
3600	972	58	1.94	1035	61	2.35	1086	63	2.28	1139	57	2.66	1166	67	2.68
3800	983	61	2.11	1044	64	2.54	1092	66	2.42	1143	61	2.83	1172	70	2.84
4000	993	64	2.28	1053	67	2.75	1097	70	2.57	1148	64	3.00	1177	73	3.02
4200	1004	67	2.47	1063	70	2.98	1103	73	2.73	1152	67	3.19	1183	77	3.20
4400	1014	71	2.68	1072	73	3.23	1108	76	2.89	1156	70	3.38	1188	80	3.40
4600	1025	74	2.90	1081	77	3.50	1114	79	3.07	1160	73	3.59	1194	83	3.61
4800	1036	77	3.14	1091	80	3.79	1119	83	3.26	1164	77	3.81	1199	86	3.84
5000	1046	80	3.40	1100	83	4.11	1125	86	3.46	1168	80	4.05	1205	90	4.07
5200	1057	83	3.69	1109	86	4.45	1130	89	3.68	1172	83	4.30	1210	93	4.32
5400	1068	87	3.99	1119	89	4.82	1136	92	3.91	1177	86	4.57	1215	96	4.59
5600	1078	90	4.33	1128	92	5.22	1141	96	4.15	1181	89	4.85	1221	99	4.88

Shaded area indicates air flow below 3750 SCFM (300 SCFM/ton) that is not recommended for High Stage cooling or heating.
Valid motor operating range for DDC% setting is 20 - 90.

APPENDIX B ELECTRICAL DATA

Electrical Data

Model Number	Electrical Rating	Compressor			Outdoor Fan Moto			Indoor Fan Motor			Optional Electric Heat			Optional Powered Convienience Outlet	Optional Power Exhaust	Power Supply	
		QTY	RLA	LRA	QTY	HP	FLA	Type	HP	FLA	Part #	KW*	FLA	FLA	FLA	MCA	MOP
DRG0903D	208/230/3/60	2	13.1	83.1	2	0.33	2	Direct Drive Standard Static	2.4	8	-	-	-	-	-	41.6/41.6	50/50
											-	-	-	9.6/8.7	-	51.2/50.3	60/60
											-	-	-	-	3.3/3.0	44.9/44.6	50/50
											-	-	-	9.6/8.7	3.3/3.0	54.5/53.3	60/60
DRG0903L	208/230/3/60	2	13.1	83.1	2	0.33	2	Direct Drive Medium Static	2.4	8	-	-	-	-	-	41.6/41.6	50/50
											-	-	-	9.6/8.7	-	51.2/50.3	60/60
											-	-	-	-	3.3/3.0	44.9/44.6	50/50
											-	-	-	9.6/8.7	3.3/3.0	54.5/53.3	60/60
DRG0903W	208/230/3/60	2	13.1	83.1	2	0.33	2	Direct Drive High Static	3.5	10.9	-	-	-	-	-	44.5/44.5	50/50
											-	-	-	9.6/8.7	-	54.1/53.2	60/60
											-	-	-	-	3.3/3.0	47.8/47.5	50/50
											-	-	-	9.6/8.7	3.3/3.0	57.4/56.2	60/60
DRG0904D	460/3/60	2	6.1	41	2	0.33	0.85	Direct Drive Standard Static	2.4	5.4	-	-	-	-	-	20.8	25
											-	-	-	4.3	-	25.1	30
											-	-	-	-	1	21.8	25
											-	-	-	4.3	1	26.1	30
DRG0904L	460/3/60	2	6.1	41	2	0.33	0.85	Direct Drive Medium Static	2.4	5.4	-	-	-	-	-	20.8	25
											-	-	-	4.3	-	25.1	30
											-	-	-	-	1	21.8	25
											-	-	-	4.3	1	26.1	30
DRG0904W	460/3/60	2	6.1	41	2	0.33	0.85	Direct Drive High Static	3.5	7.2	-	-	-	-	-	22.6	25
											-	-	-	4.3	-	26.9	30
											-	-	-	-	1	23.6	25
											-	-	-	4.3	1	27.9	30
DRG0907D	575/3/60	2	4.4	33	2	0.33	0.67	Direct Drive Standard Static	2.4	4	-	-	-	-	-	15.1	20
											-	-	-	3.5	-	18.6	20
											-	-	-	-	1.2	16.3	20
											-	-	-	3.5	1.2	19.8	20
DRG0907L	575/3/60	2	4.4	33	2	0.33	0.67	Direct Drive Medium Static	2.4	4	-	-	-	-	-	15.1	20
											-	-	-	3.5	-	18.6	20
											-	-	-	-	1.2	16.3	20
											-	-	-	3.5	1.2	19.8	20
DRG0907W	575/3/60	2	4.4	33	2	0.33	0.67	Direct Drive High Static	3.5	5	-	-	-	-	-	16.1	20
											-	-	-	3.5	-	19.6	20
											-	-	-	-	1.2	17.3	20
											-	-	-	3.5	1.2	20.8	25
DRG1023D	208/230/3/60	2	14.5	98	2	0.33	2	Direct Drive Standard Static	2.4	8	-	-	-	-	-	44.6/44.6	50/50
											-	-	-	9.6/8.7	-	54.2/53.3	60/60
											-	-	-	-	3.3/3.0	47.9/47.6	50/50
											-	-	-	9.6/8.7	3.3/3.0	57.5/56.3	60/60
DRG1023L	208/230/3/60	2	14.5	98	2	0.33	2	Direct Drive Medium Static	3.5	10.9	-	-	-	-	-	47.5/47.5	60/60
											-	-	-	9.6/8.7	-	57.1/56.2	70/70
											-	-	-	-	3.3/3.0	50.8/50.5	60/60
											-	-	-	9.6/8.7	3.3/3.0	60.4/59.2	70/70
DRG1023W	208/230/3/60	2	14.5	98	2	0.33	2	Direct Drive High Static	3.5	10.9	-	-	-	-	-	47.5/47.5	60/60
											-	-	-	9.6/8.7	-	57.1/56.2	70/70
											-	-	-	-	3.3/3.0	50.8/50.5	60/60
											-	-	-	9.6/8.7	3.3/3.0	60.4/59.2	70/70
DRG1024D	460/3/60	2	6.3	55	2	0.33	0.85	Direct Drive Standard Static	2.4	5.4	-	-	-	-	-	21.4	25
											-	-	-	4.3	-	25.7	30
											-	-	-	-	1	22.4	25
											-	-	-	4.3	1	26.7	30
DRG1024L	460/3/60	2	6.3	55	2	0.33	0.85	Direct Drive Medium Static	3.5	7.2	-	-	-	-	-	23.2	25
											-	-	-	4.3	-	27.5	30
											-	-	-	-	1	24.2	25
											-	-	-	4.3	1	28.5	30
DRG1024W	460/3/60	2	6.3	55	2	0.33	0.85	Direct Drive High Static	3.5	7.2	-	-	-	-	-	23.2	25
											-	-	-	4.3	-	27.5	30
											-	-	-	-	1	24.2	25
											-	-	-	4.3	1	28.5	30
DRG1027D	575/3/60	2	6	41	2	0.33	0.67	Direct Drive Standard Static	2.4	4	-	-	-	-	-	18.9	20
											-	-	-	3.5	-	22.4	25
											-	-	-	-	1.2	20.1	25
											-	-	-	3.5	1.2	23.6	25
DRG1027L	575/3/60	2	6	41	2	0.33	0.67	Direct Drive Medium Static	3.5	5	-	-	-	-	-	19.9	25
											-	-	-	3.5	-	23.4	25
											-	-	-	-	1.2	21.1	25
											-	-	-	3.5	1.2	24.6	25
DRG1027W	575/3/60	2	6	41	2	0.33	0.67	Direct Drive High Static	3.5	5	-	-	-	-	-	19.9	25
											-	-	-	3.5	-	23.4	25
											-	-	-	-	1.2	21.1	25
											-	-	-	3.5	1.2	24.6	25

APPENDIX B ELECTRICAL DATA

Electrical Data

Model Number	Electrical Rating	Compressor			Outdoor Fan Moto			Indoor Fan Motor			Optional Electric Heat			Optional Powered Convienience Outlet	Optional Power Exhaust	Power Supply	
		QTY	RLA	LRA	QTY	HP	FLA	Type	HP	FLA	Part #	KW*	FLA	FLA	FLA	MCA	MOP
DRG1203D	208/230/3/60	2	15.9	110	2	0.33	2	Direct Drive Standard Static	2.4	8	-	-	-	-	-	47.8/47.8	60/60
											-	-	-	9.6/8.7	-	57.4/56.5	70/70
											-	-	-	-	3.3/3.0	51.1/50.8	60/60
											-	-	-	9.6/8.7	3.3/3.0	60.7/59.5	70/70
DRG1203L	208/230/3/60	2	15.9	110	2	0.33	2	Direct Drive Medium Static	3.5	10.9	-	-	-	-	-	50.7/50.7	60/60
											-	-	-	9.6/8.7	-	60.3/59.4	70/70
											-	-	-	-	3.3/3.0	54.0/53.7	60/60
											-	-	-	9.6/8.7	3.3/3.0	63.6/62.4	70/70
DRG1203W	208/230/3/60	2	15.9	110	2	0.33	2	Direct Drive High Static	5	14.5	-	-	-	-	-	54.3/54.3	70/70
											-	-	-	9.6/8.7	-	63.9/63.0	70/70
											-	-	-	-	3.3/3.0	57.6/57.3	70/70
											-	-	-	9.6/8.7	3.3/3.0	67.2/66.0	70/70
DRG1204D	460/3/60	2	7.1	52	2	0.33	0.85	Direct Drive Standard Static	2.4	5.4	-	-	-	-	-	23	30
											-	-	-	4.3	-	27.3	30
											-	-	-	-	1	24	30
											-	-	-	4.3	1	28.3	30
DRG1204L	460/3/60	2	7.1	52	2	0.33	0.85	Direct Drive Medium Static	3.5	7.2	-	-	-	-	-	24.8	30
											-	-	-	4.3	-	29.1	35
											-	-	-	-	1	25.8	30
											-	-	-	4.3	1	30.1	35
DRG1204W	460/3/60	2	7.1	52	2	0.33	0.85	Direct Drive High Static	5	10.6	-	-	-	-	-	28.2	35
											-	-	-	4.3	-	32.5	35
											-	-	-	-	1	29.2	35
											-	-	-	4.3	1	33.5	35
DRG1207D	575/3/60	2	5.1	39.5	2	0.33	0.67	Direct Drive Standard Static	2.4	4	-	-	-	-	-	16.9	20
											-	-	-	3.5	-	20.4	25
											-	-	-	-	1.2	18.1	20
											-	-	-	3.5	1.2	21.6	25
DRG1207L	575/3/60	2	5.1	39.5	2	0.33	0.67	Direct Drive Medium Static	3.5	5	-	-	-	-	-	17.9	20
											-	-	-	3.5	-	21.4	25
											-	-	-	-	1.2	19.1	20
											-	-	-	3.5	1.2	22.6	25
DRG1207W	575/3/60	2	5.1	39.5	2	0.33	0.67	Direct Drive High Static	5	7.2	-	-	-	-	-	20.1	25
											-	-	-	3.5	-	23.6	25
											-	-	-	-	1.2	21.3	25
											-	-	-	3.5	1.2	24.8	25
DRG1503D	208/230/3/60	2	19	123	2	0.33	3.5	Direct Drive Standard Static	3.5	10.9	-	-	-	-	-	60.7/60.7	70/70
											-	-	-	9.6/8.7	-	70.3/69.4	80/80
											-	-	-	-	3.3/3.0	64.0/63.7	70/70
											-	-	-	9.6/8.7	3.3/3.0	73.6/72.4	80/80
DRG1503L	208/230/3/60	2	19	123	2	0.33	3.5	Direct Drive Medium Static	3.5	10.9	-	-	-	-	-	60.7/60.7	70/70
											-	-	-	9.6/8.7	-	70.3/69.4	80/80
											-	-	-	-	3.3/3.0	64.0/63.7	70/70
											-	-	-	9.6/8.7	3.3/3.0	73.6/72.4	80/80
DRG1503W	208/230/3/60	2	19	123	2	0.33	3.5	Direct Drive High Static	5	14.5	-	-	-	-	-	64.3/64.3	80/80
											-	-	-	9.6/8.7	-	73.9/73.0	90/90
											-	-	-	-	3.3/3.0	67.6/67.3	80/80
											-	-	-	9.6/8.7	3.3/3.0	77.2/76.0	90/90
DRG1504D	460/3/60	2	9.7	62	2	0.33	1.6	Direct Drive Standard Static	3.5	7.2	-	-	-	-	-	32.3	40
											-	-	-	4.3	-	36.6	45
											-	-	-	-	1	33.3	40
											-	-	-	4.3	1	37.6	45
DRG1504L	460/3/60	2	9.7	62	2	0.33	1.6	Direct Drive Medium Static	3.5	7.2	-	-	-	-	-	32.3	40
											-	-	-	4.3	-	36.6	45
											-	-	-	-	1	33.3	40
											-	-	-	4.3	1	37.6	45
DRG1504W	460/3/60	2	9.7	62	2	0.33	1.6	Direct Drive High Static	5	10.6	-	-	-	-	-	35.7	45
											-	-	-	4.3	-	40	45
											-	-	-	-	1	36.7	45
											-	-	-	4.3	1	41	45
DRG1507D	575/3/60	2	7.4	50	2	0.33	3.5	Direct Drive Standard Static	3.5	5	-	-	-	-	-	28.7	35
											-	-	-	3.5	-	32.2	35
											-	-	-	-	1.2	29.9	35
											-	-	-	3.5	1.2	33.4	35
DRG1507L	575/3/60	2	7.4	50	2	0.33	3.5	Direct Drive Medium Static	3.5	5	-	-	-	-	-	28.7	35
											-	-	-	3.5	-	32.2	35
											-	-	-	-	1.2	29.9	35
											-	-	-	3.5	1.2	33.4	35
DRG1507W	575/3/60	2	7.4	50	2	0.33	3.5	Direct Drive High Static	5	7.2	-	-	-	-	-	30.9	35
											-	-	-	3.5	-	34.4	40
											-	-	-	-	1.2	32.1	35
											-	-	-	3.5	1.2	35.6	40

APPENDIX C UNIT DIMENSIONS

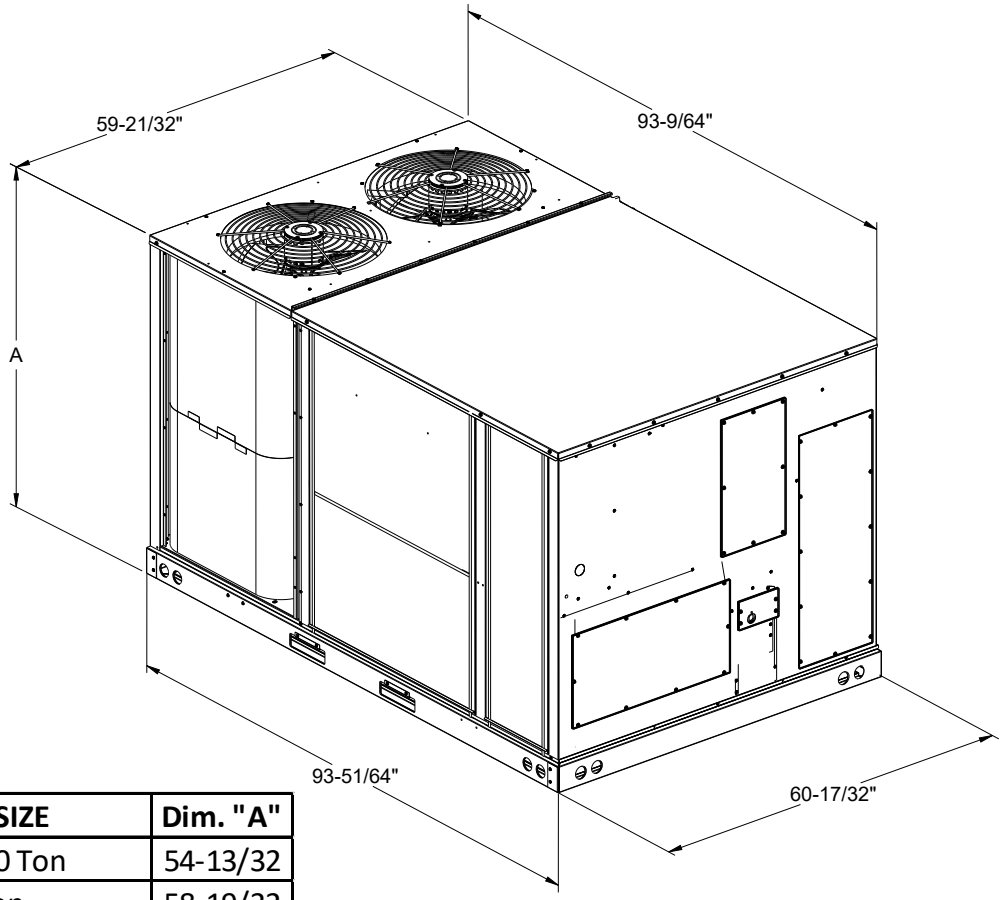

MODEL SIZE	Dim. "A"
7.5, 8.5, 10 Ton	54-13/32
12.5 Ton	58-19/32

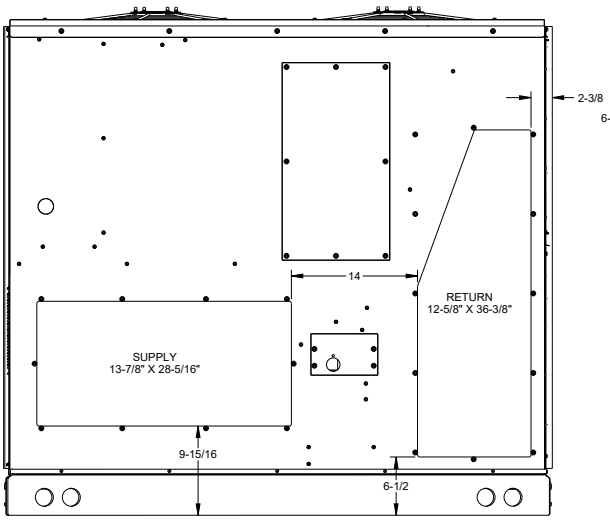

Horizontal Discharge

SHOWN WITH OPEN
SUPPLY & RETURN CUTOUTS

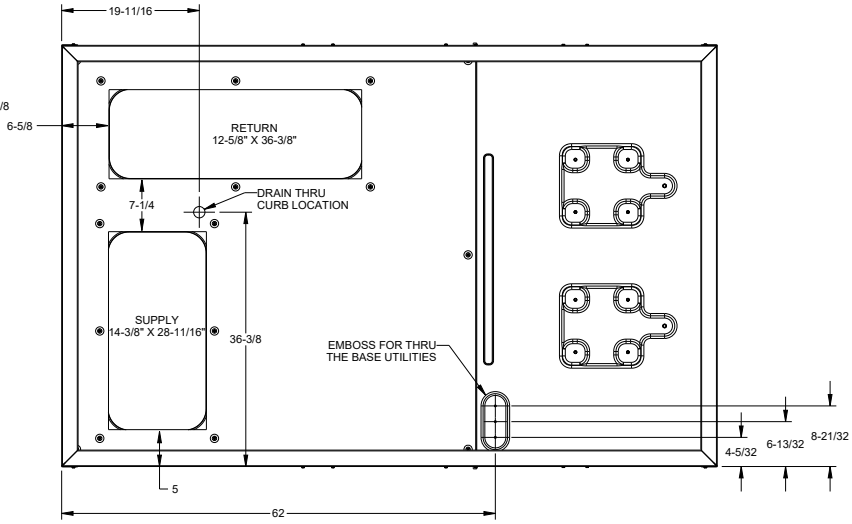

Vertical Discharge

BOTTOM VIEW OF UNIT

NOTE: Refer to IOD-7082 included in the literature pack for installing horizontal duct covers.

APPENDIX D MIN-MAX AIRFLOW

UNIT	Rated High Input (MBH)	Gas Heat	Minimum Heating Airlflow (SCFM)	Maximum Heating Airflow (SCFM)
DRG090	130	High	1765	3882
		Low	1323	2912
	180	High	2443	5375
		Low	1832	4031
	225	High	2400	4199
		Low	1800	3149
DRG102	130	High	1765	3882
		Low	1323	2912
	180	High	2443	5375
		Low	1832	4031
	225	High	2400	4199
		Low	1800	3149
DRG120	130	High	1765	3882
		Low	1323	2912
	180	High	2443	5375
		Low	1832	4031
	240	High	2986	5972
		Low	2240	4479
DRG150	130	High	1765	3882
		Low	1323	2912
	180	High	2443	5375
		Low	1832	4031
	240	High	2756	5119
		Low	2067	3839

APPENDIX E WIRING DIAGRAMS

WARNING

HIGH VOLTAGE!
DISCONNECT ALL POWER BEFORE SERVICING OR INSTALLING THIS UNIT. MULTIPLE POWER SOURCES MAY BE PRESENT. FAILURE TO DO SO MAY CAUSE PROPERTY DAMAGE, PERSONAL INJURY OR DEATH.

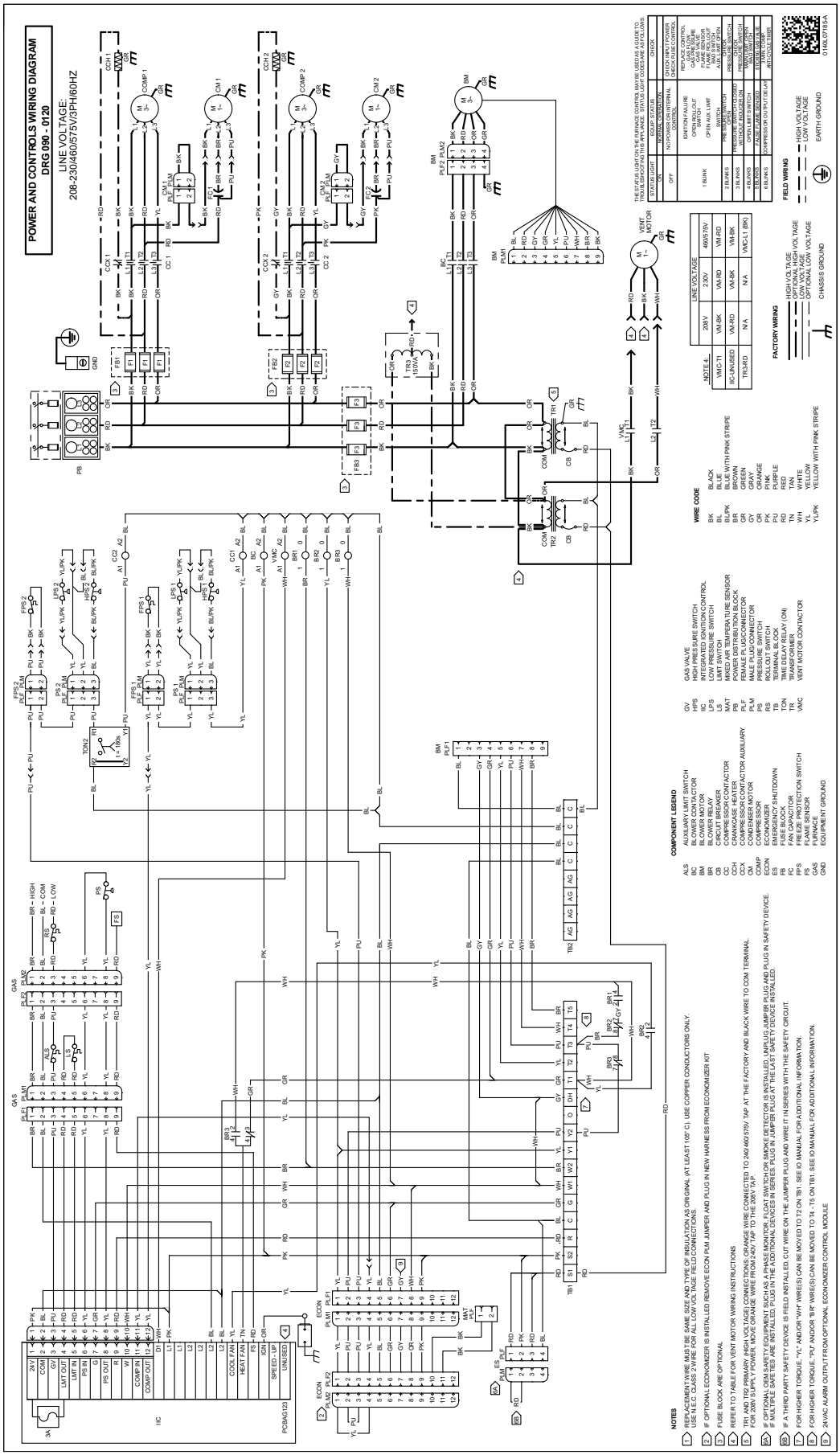

Wiring is subject to change. Always refer to the wiring diagram on the unit for the most up-to-date wiring.

APPENDIX E WIRING DIAGRAMS

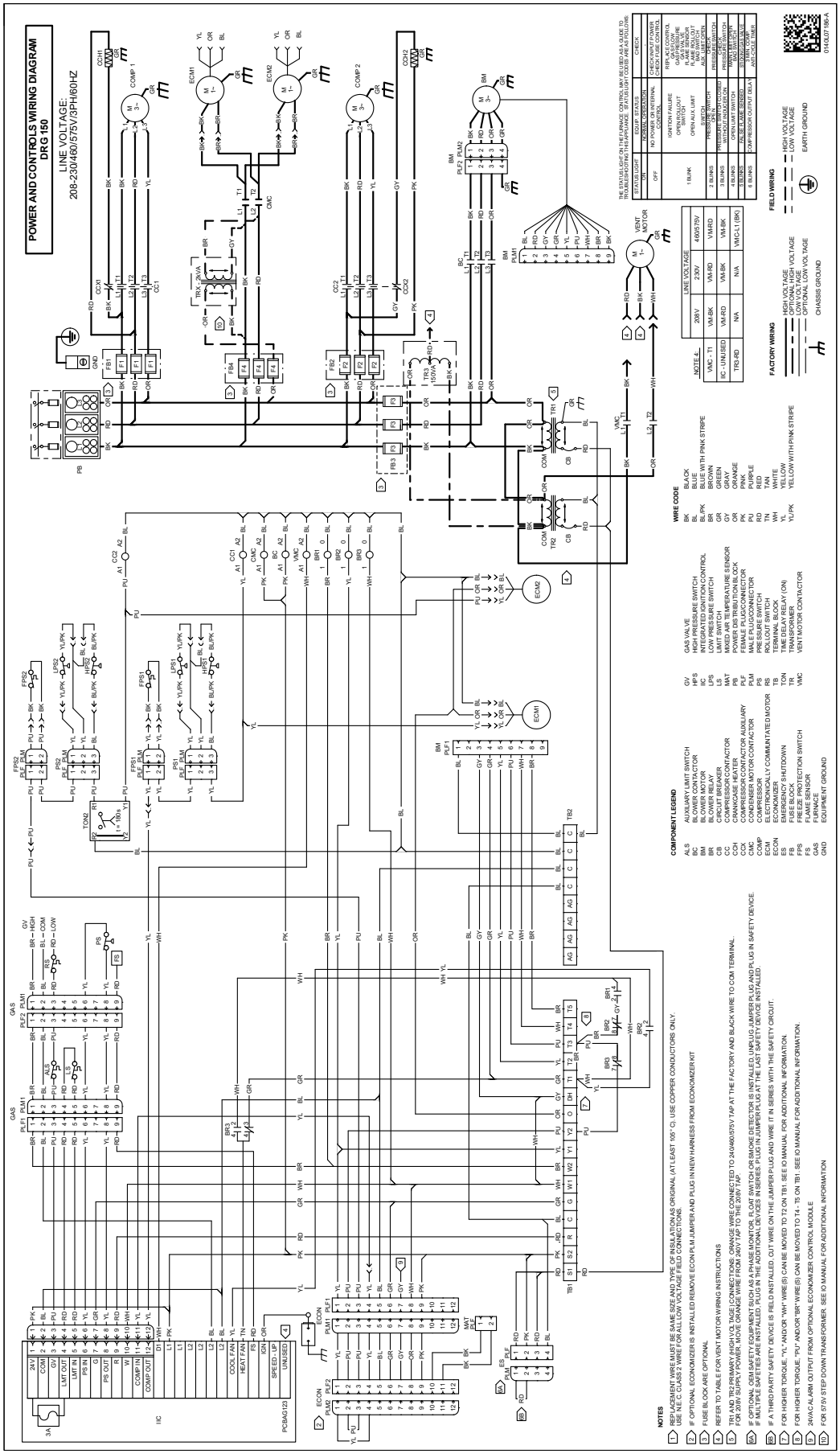

Wiring is subject to change. Always refer to the wiring diagram on the unit for the most up-to-date wiring.

APPENDIX E WIRING DIAGRAMS

WARNING

HIGH VOLTAGE!
DISCONNECT ALL POWER BEFORE SERVICING OR INSTALLING THIS UNIT. MULTIPLE POWER SOURCES MAY BE PRESENT. FAILURE TO DO SO MAY CAUSE PROPERTY DAMAGE, PERSONAL INJURY OR DEATH.

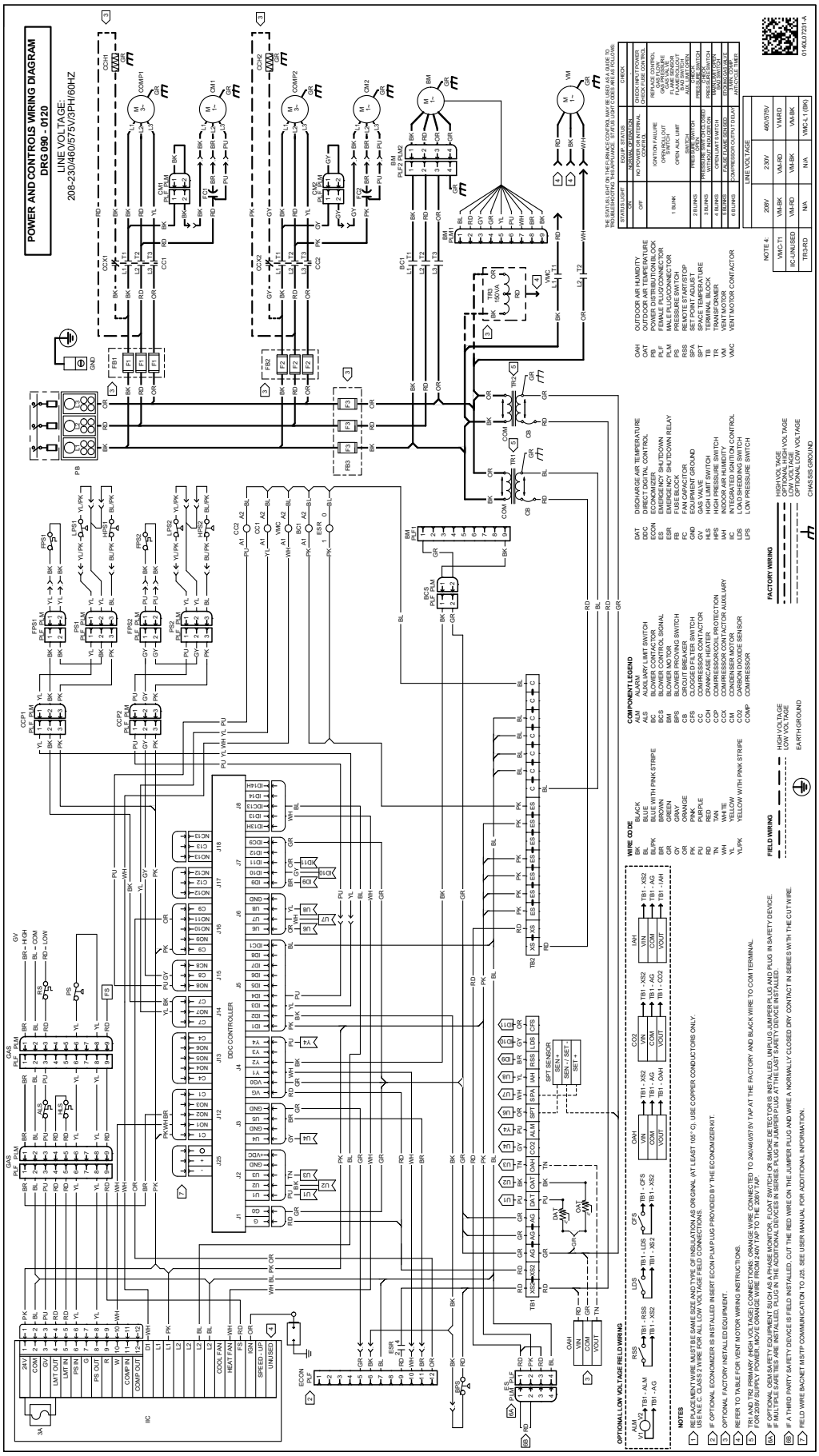

Wiring is subject to change. Always refer to the wiring diagram on the unit for the most up-to-date wiring.

APPENDIX E WIRING DIAGRAMS

WARNING

HIGH VOLTAGE!
DISCONNECT ALL POWER BEFORE SERVICING OR INSTALLING THIS UNIT. MULTIPLE POWER SOURCES MAY BE PRESENT. FAILURE TO DO SO MAY CAUSE PROPERTY DAMAGE, PERSONAL INJURY OR DEATH.

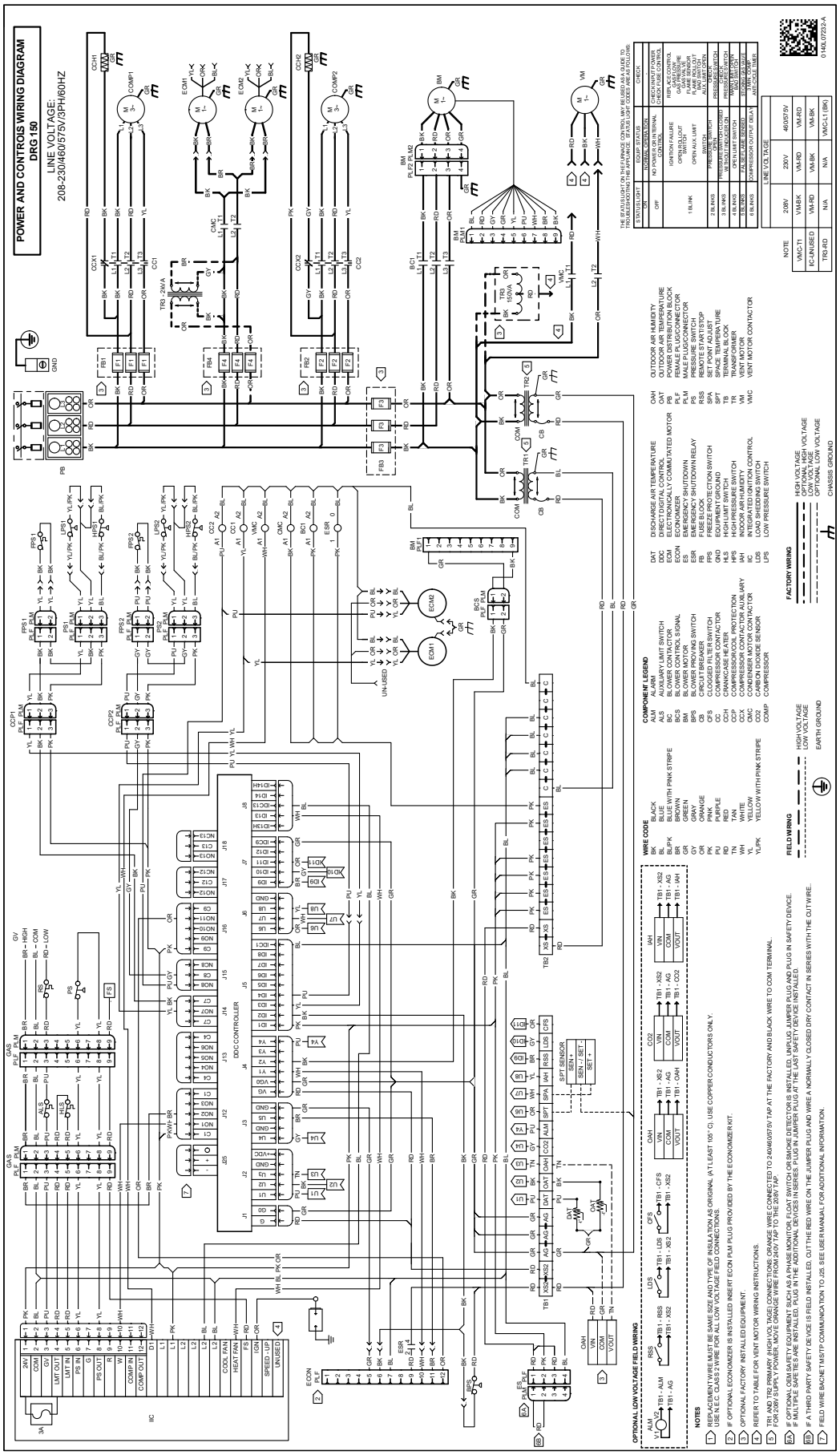

Wiring is subject to change. Always refer to the wiring diagram on the unit for the most up-to-date wiring.

Start-up Checklist

**Store in job file*

Date: _____ Location: _____

Model Number: _____ _____

Serial Number: _____ _____

Technician: _____ Unit #: _____

Pre Start-Up

(Check each item as completed)

- ☐ Verify all packaging material has been removed.
- ☐ Remove all shipping brackets per installation instructions.
- ☐ Verify the job site voltage agrees with the unit serial plate.
- ☐ Verify condensate connection is installed per installation instructions.
- ☐ Verify proper clearance around the unit for safety, service, maintenance and proper unit operation.
- ☐ Verify proper weatherproofing of all ductwork, roof curbs and electrical connections.
- ☐ Check that the flue screen is in place.
- ☐ Check gas piping for leaks.
- ☐ Verify gas pressure to the unit is within the range specified on the serial plate.
- ☐ Check to ensure that all fans, pulleys and wheels are secure.
- ☐ Check for proper belt tension and alignment per installation instructions.
- ☐ Check refrigerant piping for rubbing and leaks. *Repair if necessary.*
- ☐ Check unit wiring to ensure it is not in contact with refrigerant piping or sharp metal edges.
- ☐ Check all electrical connections and terminals. *Tighten as needed.*
- ☐ Verify that the crankcase heaters have been energized for 24 hours.
- ☐ Verify the scroll compressor(s) are rotating in the right direction.
- ☐ Verify all accessories are installed and operating correctly.
- ☐ Check filters and replace if necessary.
- ☐ Verify the installation of the thermostat.

9/2014

Start-up Checklist

Start-Up

(Insert the values as each item is completed.)

ELECTRICAL

Supply Voltage	L1 - L2	_____	L2 - L3	_____	L3 - L1	_____
Circuit 1 Compressor Amps	L1	_____	L2	_____	L3	_____
Circuit 2 Compressor Amps	L1	_____	L2	_____	L3	_____
Blower Amps	L1	_____	L2	_____	L3	_____
Condenser Fan Amps	Fan 1	_____	Fan 2	_____	Fan 3	_____

BLOWER EXTERNAL STATIC PRESSURE

Return Air Static Pressure	_____	IN. W.C.
Supply Air Static Pressure	_____	IN. W.C.
Total External Static Pressure	_____	IN. W.C.
Blower Wheel RPM	_____	RPM

TEMPERATURES

Outdoor Air Temperature	_____	DB	_____	WB
Return Air Temperature	_____	DB	_____	WB
Cooling Supply Air Temperature	_____	DB	_____	WB
Heating Supply Air Temperature	_____	DB		

PRESSURES

Gas Inlet Pressure	_____	IN. W.C.		
Gas Manifold Pressure	_____	IN. W.C. (Low Fire)	_____	IN. W.C. (High Fire)
Suction Circuit 1	_____	PSIG	_____	°F
Superheat (Orifice System)			_____	°F
Suction Circuit 2	_____	PSIG	_____	°F
Superheat (Orifice System)			_____	°F
Discharge Circuit 1	_____	PSIG	_____	°F
Subcooling (TXV System)			_____	°F
Discharge Circuit 2	_____	PSIG	_____	°F
Subcooling (TXV System)			_____	°F

(HEAT PUMP ONLY)

Suction Circuit 1	_____	PSIG	_____	°F
Suction Circuit 2	_____	PSIG	_____	°F
Discharge Circuit 1	_____	PSIG	_____	°F
Discharge Circuit 2	_____	PSIG	_____	°F

PAGE LEFT INTENTIONALLY BLANK

CUSTOMER FEEDBACK
Daikin is very interested in all product comments.
Please fill out the feedback form on the following link:
https://daikincomfort.com/contact-us
You can also scan the QR code on the right to be directed to the feedback page.

Our continuing commitment to quality products may mean a change in specifications without notice.

© 2020-2023 ***DAIKIN COMFORT TECHNOLOGIES MANUFACTURING, L.P.***
19001 Kermier Rd., Waller, TX 77484
www.daikincomfort.com