DAIKIN

INSTALLATION INSTRUCTIONS

DBG SERIES

LIGHT COMMERCIAL PACKAGED GAS UNIT

15 to 25 TON

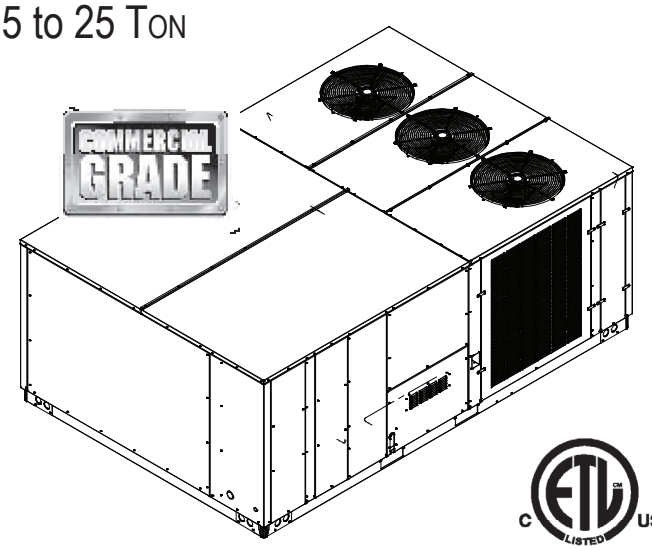

NOTE: 15 & 20 ton model shown in picture. 25 ton model has 2 fans.

Intertek

ATTENTION INSTALLING PERSONNEL:
Prior to installation, thoroughly familiarize yourself with this Installation Manual. Observe all safety warnings. During installation or repair, caution is to be observed.

It is your responsibility to install the product safely and to educate the customer on its safe use.

RECOGNIZE THIS SYMBOL AS A SAFETY PRECAUTION.

These installation instructions cover the **outdoor** installation of single package heating and cooling units. See the Specification Sheet applicable to your model for information regarding accessories.

***NOTE:** Please contact your distributor or our website for the applicable Specification Sheet referred to in this manual.

This Forced Air Central Unit Design Complies With Requirements Embodied in the American National Standard / National Standard of Canada shown below.

ANSI Z21.47•CSA-2.3 CENTRAL FURNACES

WARNING

ONLY PERSONNEL THAT HAVE BEEN TRAINED TO INSTALL, ADJUST, SERVICE OR REPAIR (HEREINAFTER, "SERVICE") THE EQUIPMENT SPECIFIED IN THIS MANUAL SHOULD SERVICE THE EQUIPMENT. THE MANUFACTURER WILL NOT BE RESPONSIBLE FOR ANY INJURY OR PROPERTY DAMAGE ARISING FROM IMPROPER SERVICE OR SERVICE PROCEDURES. IF YOU SERVICE THIS UNIT, YOU ASSUME RESPONSIBILITY FOR ANY INJURY OR PROPERTY DAMAGE WHICH MAY RESULT. IN ADDITION, IN JURISDICTIONS THAT REQUIRE ONE OR MORE LICENSES TO SERVICE THE EQUIPMENT SPECIFIED IN THIS MANUAL, ONLY LICENSED PERSONNEL SHOULD SERVICE THE EQUIPMENT. IMPROPER INSTALLATION, ADJUSTMENT, SERVICING OR REPAIR OF THE EQUIPMENT SPECIFIED IN THIS MANUAL, OR ATTEMPTING TO INSTALL, ADJUST, SERVICE OR REPAIR THE EQUIPMENT SPECIFIED IN THIS MANUAL WITHOUT PROPER TRAINING MAY RESULT IN PRODUCT DAMAGE, PROPERTY DAMAGE, PERSONAL INJURY OR DEATH.

PROP 65 WARNING FOR CALIFORNIA CONSUMERS

WARNING

Cancer and Reproductive Harm - www.P65Warnings.ca.gov

0140M00517-A

Index

Replacement Parts 2
Safety Instructions 2
General Information 3
Unit Location 4
Clearances 6
Roof Curb Post-Installation Checks 6
Roof Top Duct Connections 6
Rigging Details 6
Electrical Wiring 8
Gas Supply Piping 10
Propane Gas Installations 12
Circulating Air and Filters 13
Venting 13

IOD-1041
07/2019

Our continuing commitment to quality products may mean a change in specifications without notice.

©2019 DAIKIN COMPANY, L.P.

5151 San Felipe St., Suite 500, Houston, TX 77056
www.daikinac.com

Condensate Drain Connection 13
Startup, Adjustments, and Checks 13
Air flow Adjustments.....15
Motor Sheave Adjustments 16
Gas System Check.....16
Normal Sequence Of Operation - heating 18
Normal Sequence Of Operation - Cooling 20
Maintenance 21
Troubleshooting 22
Appendix A Blower Performance Data.....24
Appendix B Electrical Data.....27
Appendix C Unit Dimensions 28
Appendix D Wiring Diagrams.....29
Start-up checklist.....37

REPLACEMENT PARTS

Ordering Parts

When reporting shortages or damages, or ordering repair parts, give the complete unit model and serial numbers as stamped on the unit's nameplate.

Replacement parts for this appliance are available through your contractor or local distributor. Your nearest distributor can be located online at **www.daikinac.com** or by contacting:

EQUIPMENT SUPPORT
DAIKIN NORTH AMERICA LLC
19001 KERMIER ROAD
WALLER, TEXAS 77484
855-DAIKIN-1

SAFETY INSTRUCTIONS

To The Installer

Before installing this unit, please read this manual to familiarize yourself on the specific items which must be adhered to, including maximum external static pressure to unit, air temperature rise and minimum or maximum CFM.

Keep this literature in a safe place for future reference.

WARNING

If the information in these instructions is not followed exactly, a fire or explosion may result causing property damage, personal injury or loss of life.

— Do not store or use gasoline or other flammable vapors and liquids in the vicinity of this or any other appliance.

— **WHAT TO DO IF YOU SMELL GAS:**

- Do not try to light any appliance.
- Do not touch any electrical switch; do not use any phone in your building.
- Immediately call your gas supplier from a neighbor's phone. Follow the gas supplier's instructions.
- If you cannot reach your gas supplier, call the fire department.

— Installation and service must be performed by a qualified installer, service agency or the gas supplier.

WARNING

Should overheating occur or the gas supply fail to shut off, turn off the manual gas shutoff valve external to the furnace before turning off the electrical supply.

CAUTION

Sheet metal parts, screws, clips and similar items inherently have sharp edges, and it is necessary that the installer and service personnel exercise caution.

WARNING

Do not connect to or use any device that is not design certified by the manufacturer for use with this unit. Serious property damage, personal injury, reduced unit performance and/or hazardous conditions may result from the use of such non-approved devices.

WARNING

This unit must not be used as a "construction heater" during the finishing phases of construction on a new structure. This type of use may result in premature failure of the unit due to extremely low return air temperatures and exposure to corrosive or very dirty atmospheres.

WARNING

HIGH VOLTAGE !

Disconnect all power before servicing or installing this unit. Multiple power sources may be present. Failure to do so may cause property damage, personal injury or death.

WARNING

To prevent the risk of property damage, personal injury or death, do not store combustible materials or use gasoline or other flammable liquids or vapors in the vicinity of this appliance.

WARNING

CARBON MONOXIDE POISONING HAZARD

Failure to keep this compartment closed except when servicing could result in carbon monoxide poisoning or death.

This compartment must be closed except when servicing.

ADVERTISSEMENT

RISQUE D'EMPOISONNEMENT AU MONOXYDE DE CARBONE

Si ce compartiment n'est pas ferme en tout temps, sauf en cas de reparation, il y a risque d'empoisonnement ou monoxyde de carbon ou de mort.

Ce compartiment doit être ferme sauf au moment de l'entretien.

ADVERTENCIA

PELIGRO MONOXIDO DE CARBONO TOXICO

El fracaso de no mantener compartimiento cerrado menos durante, atender, podria tener como resultado envenar de monoxido de carbona o muerte.

Este compartimiento debe cerrado menos al atender.

0140L00106 REV C

GENERAL INFORMATION

For complete information and installation instructions for models with DDC controls, see manual DK-DDC-TGD-XXX.

WARNING

To prevent property damage, personal injury or death due to fire, explosions, smoke, soot, condensation, electric shock or carbon monoxide, this unit must be properly installed, repaired, operated and maintained.

This unit is approved for outdoor installation ONLY. Rated performance is achieved after 72 hours of operation. Rated performance is delivered at the specified airflow. See outdoor unit specification sheet for split system models or product specification sheet for packaged and light commercial models. Specification sheets can be found at www.daikinac.com for Daikin brand products. Within the website, please select the residential or commercial products menu and then select the submenu for the type of product to be installed, such as air conditioners or heat pumps, to access a list of product pages that each contain links to that model's specification sheet.

To assure that your unit operates safely and efficiently, it must be installed, operated, and maintained in accordance with these installation and operating instructions, all local building codes and ordinances, or in their absence, with the latest edition of the National Fuel Gas Code NFPA54/ANSI Z223.1 and National Standard of Canada CAN/CSA B149 Installation Codes.

EPA Regulations

Important: The United States Environmental Protection Agency (EPA) has issued various regulations regarding the introduction and disposal of refrigerants in this unit. Failure to follow these regulations may harm the environment and can lead to the imposition of substantial fines. Because regulations may vary due to passage of new laws, we suggest a certified technician perform any work done on this unit. Should you have any questions please contact the local office of the EPA.

National Codes

This product is designed and manufactured to permit installation in accordance with National Codes. It is the installer's responsibility to install the product in accordance with National Codes and/or prevailing local codes and regulations.

The heating and cooling capacities of the unit should be greater than or equal to the design heating and cooling loads of the area to be conditioned. The loads should be calculated by an approved method or in accordance with ASHRAE Guide or Manual J - Load Calculations published by the Air Conditioning Contractors of America.

Obtain from:

American National Standards Institute
25 West 43rd Street, 4th Floor
New York, NY 10036

System design and installation should also, where applicable, follow information presented in accepted industry guides such as the ASHRAE Handbooks. The manufacturer assumes no responsibility for equipment installed in violation of any code or regulation. The mechanical installation of the packaged roof top units consists of making final connections between the unit and building services; supply and return duct connections; and drain connections (if required). The internal systems of the unit are completely factory-installed and tested prior to shipment.

Units are generally installed on a steel roof mounting curb assembly which has been shipped to the job site for installation on the roof structure prior to the arrival of the unit. The model number shown on the unit's identification plate identifies the various components of the unit such as refrigeration tonnage, heating input and voltage.

Carefully inspect the unit for damage including damage to the cabinetry. Any bolts or screws which may have loosened in transit must be re-tightened. In the event of damage, the receiver should:

1. Make notation on delivery receipt of any visible damage to shipment or container.
2. Notify carrier promptly and request an inspection.
3. In case of concealed damage, carrier should be notified as soon as possible-preferably within 5 days.
4. File the claim with the following supporting documents:
   a. Original Bill of Lading, certified copy, or indemnity bond.
   b. Original paid freight bill or indemnity in lieu thereof.
   c. Original invoice or certified copy thereof, showing trade and other discounts or reductions.

d. Copy of the inspection report issued by carrier representative at the time damage is reported to the carrier. The carrier is responsible for making prompt inspection of damage and for a thorough investigation of each claim. The distributor or manufacturer will not accept claims from dealers for transportation damage.

NOTE: When inspecting the unit for transportation damage, remove all packaging materials. Recycle or dispose of the packaging material according to local codes.

Pre-Installation Checks

Carefully read all instructions for the installation prior to installing unit. Ensure each step or procedure is understood and any special considerations are taken into account before starting installation. Assemble all tools, hardware and supplies needed to complete the installation. Some items may need to be purchased locally.

UNIT LOCATION

WARNING

To prevent possible equipment damage, property damage, personal injury or death, the following bullet points must be observed when installing the unit.

IMPORTANT NOTE: Remove wood shipping rails prior to installation of the unit. *See important note under Roof Curb Installation Only.*

All Installations:

Important Note: *Unit should be energized 24 hours prior to compressor start up to ensure crankcase heater has sufficiently warmed the compressors. Compressor damage may occur if this step is not followed.*

NOTE: This appliance is a dedicated downflow design.

Proper installation of the unit ensures trouble-free operation. Improper installation can result in problems ranging from noisy operation to property or equipment damages, dangerous conditions that could result in injury or personal property damage. Damage or repairs due to improper installation are not covered under the warranty. Give this booklet to the user and explain it's provisions. The user should retain these instructions for future reference.

- For proper flame pattern within the heat exchanger and proper condensate drainage, the unit must be mounted level.
- The flue outlet must be at least 12 inches from any opening through which flue gases could enter a building, and at least three feet above any forced air inlet located within ten feet. The economizer/manual fresh air intake/motorized fresh air intake and combustion air inlet mounted on the unit are not affected by this restriction.
- To avoid possible corrosion of the heat exchanger, do not locate the unit in an area where the outdoor air (i.e. combustion air for the unit) will be frequently contaminated by compounds containing chlorine or fluorine. Common sources of such compounds include swimming pool chemicals and chlorine bleaches, paint stripper, adhesives, paints, varnishes, sealers, waxes (which are not yet dried) and solvents used during construction and remodeling. Various commercial and industrial processes may also be sources of chlorine/fluorine compounds.
- To avoid possible illness or death of the building occupants, do NOT locate outside air intake device (economizer, manual fresh air intake, motorized fresh air intake) too close to an exhaust outlet, gas vent termination, or plumbing vent outlet. For specific distances required, consult local codes.
- Allow minimum clearances from the enclosure for fire protection, proper operation, and service access (see unit clearances). These clearances must be permanently maintained.
- The combustion air inlet and flue outlet on the unit must never be obstructed. If used, do not allow the economizer/ manual fresh air damper/ motorized fresh air damper to become blocked by snow or debris. In some climates or locations, it may be necessary to elevate the unit to avoid these problems.
- When the unit is heating, the temperature of the return air entering the unit must be between 50° F and 100° F.

Ground Level Installations Only:

- When the unit is installed on the ground adjacent to the building, a level concrete (or equal) base is recommended. Prepare a base that is 3" larger than the package unit footprint and a minimum of 3" thick.
- The base should also be located where no runoff of water from higher ground can collect in the unit.

Roof top Installations Only:

- To avoid possible property damage or personal injury, the roof must have sufficient structural strength to carry the weight of the unit(s) and snow or water loads as required by local codes. Consult a structural engineer to determine the weight capabilities of the roof.
- The unit may be installed directly on wood floors or on Class A, Class B, or Class C roof covering material.
- To avoid possible personal injury, a safe, flat surface for service personnel should be provided.
- As indicated on the unit data plate, a minimum clearance of 36" to any combustible material is required on the furnace access side of the unit. All combustible materials must be kept out of this area.
- This 36" clearance must also be maintained to insure proper combustion air and flue gas flow. The combustion air intake and furnace flue discharge must not be blocked for any reason, including blockage by snow.

- Adequate clearances from the furnace flue discharge to any adjacent public walkways, adjacent buildings, building openings or openable windows must be maintained in accordance with the latest edition of the National Fuel Gas Code (ANSI Z223.1)
- Minimum horizontal clearance of 48” from the furnace flue discharge to any electric meters, gas meters, regulators and relief equipment is required.

Unit Precautions

- Do not stand or walk on the unit.
- Except for holes in the wiring entrances (see Figure below), do not drill holes anywhere in panels or in the base frame of the unit. Unit access panels provide structural support.
- Do not remove any access panels until unit has been installed on roof curb or field supplied structure.
- Do not roll unit across finished roof without prior approval of owner or architect.
- Do not skid or slide on any surface as this may damage unit base. The unit must be stored on a flat, level surface. Protect the condenser coil because it is easily damaged.

Roof Curb Installations Only:

Before installing this unit...

IMPORTANT NOTE: This unit has been equipped with a shipping brace under the compressor section that **MUST BE REMOVED** before installing the unit on a roof curb.

Please follow the instructions below to remove brace.

CAUTION

When unit is suspended, boards and shipping brace will drop when screws are removed. To prevent personal injury, STAND CLEAR. Remove fork hole brackets, boards and shipping brace from bottom of unit before placing unit onto curb.

1. Remove wooden struts and shipping brace per installation instructions. *The struts are located in the fork holes and are used to protect the unit from damage while lifting with forks. The shipping brace is located under the unit (under compressor).* Also remove the fork hole brackets as shown in the following figure.
2. Locate and remove the end brackets as shown in the following figure.

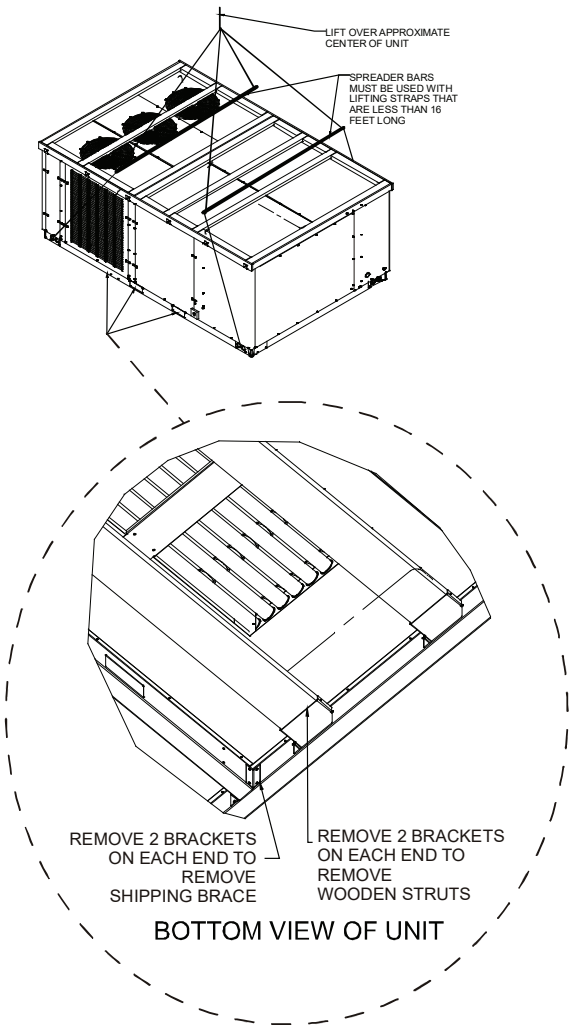

3. Lift unit per the “Rigging Details” section of this manual, observing all warnings and cautions. When unit is lifted, boards and shipping brace will drop if screws have been removed. To avoid injury, STAND CLEAR.
4. Dispose of the boards and brace appropriately.

Curb installations must comply with local codes and should be done in accordance with the established guidelines of the National Roofing Contractors Association.

Proper unit installation requires that the roof curb be firmly and permanently attached to the roof structure. Check for adequate fastening method prior to setting the unit on the curb.

Full perimeter roof curbs are available from the factory and are shipped unassembled. Field assembly, squaring, leveling and mounting on the roof structure are the responsibility of the installing contractor. All required hardware necessary for the assembly of the sheet metal curb is included in the curb accessory.

WARNING

To prevent possible equipment damage, property damage, personal injury or death, the following bullet points must be observed when installing the unit.

- Sufficient structural support must be determined prior to locating and mounting the curb and package unit.
- Ductwork must be constructed using industry guidelines. The duct work must be placed into the roof curb before mounting the package unit. Our full perimeter curbs include duct connection frames to be assembled with the curb. Cantilevered type curbs are not available from the factory.
- Curb insulation, cant strips, flashing and general roofing material are furnished by the contractor.

The curbs must be supported on parallel sides by roof members. The roof members must not penetrate supply and return duct opening areas as damage to the unit might occur.

NOTE: The unit and curb accessories are designed to allow vertical duct installation before unit placement. Duct installation after unit placement is not recommended.

CAUTION

All curbs look similar. To avoid incorrect curb positioning, check job plans carefully and verify markings on curb assembly. Instructions may vary in curb styles and supercede information shown.

See the manual shipped with the roof curb for assembly and installation instructions.

CLEARANCES

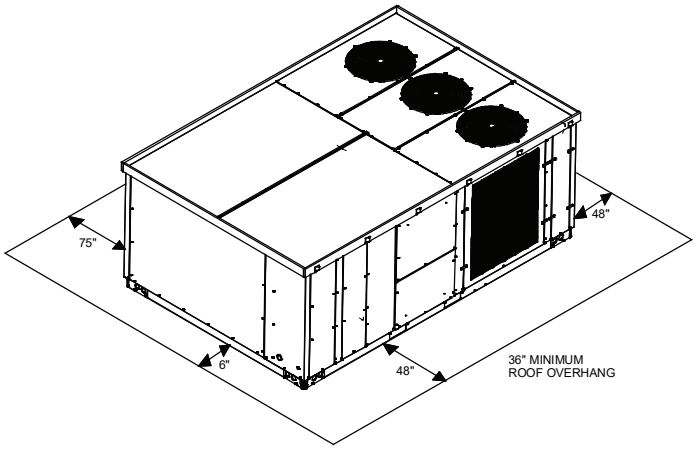

UNIT CLEARANCES

Adequate clearance around the unit should be kept for safety, service, maintenance, and proper unit operation. A clearance of 75” on the service side of the unit is recommended to facilitate possible blower assembly, shaft, wheel replacement, coil, heat exchanger, electric heat and gas furnace removal. This unit must not be installed beneath any obstruction. This unit should be installed remote from all building exhausts to inhibit ingestion of exhaust air into the unit’s fresh air intake.

NOTE: If the 48” minimum is used on the control panel side of a DBG unit, a flue extension (MF# 220-GX-03) needs be to installed to prevent flue gas recirculation.

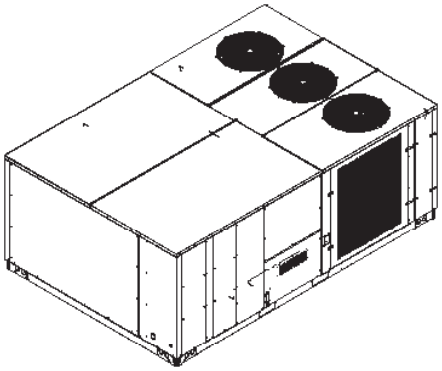

NOTE: *15 & 20 ton models have 3 fans.*
25 ton models have 2 fans.

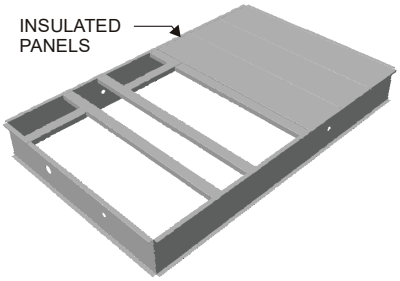

ROOF CURB INSTALLATION

ROOF CURB POST-INSTALLATION CHECKS

After installation, check the top of the curb, duct connection frame and duct flanges to make sure gasket has been applied properly. Gasket should be firmly applied to the top of the curb perimeter, duct flanges and any exposed duct connection frame. If gasket is loose, re-apply using strong weather resistant adhesive.

Protrusion

Inspect curb to ensure that none of the utility services (electric) routed through the curb protrude above the curb.

CAUTION

If protrusions exist, do not attempt to set unit on curb. Information shown.

ROOF TOP DUCT CONNECTIONS

Install all duct connections on the unit before placing the unit on rooftop.

RIGGING DETAILS

WARNING

To prevent property damage, the unit should remain in an upright position during all rigging and moving operations. To facilitate lifting and moving when a crane is used, place the unit in an adequate cable sling.

CAUTION

Do not lift units two at a time. Provisions for forks have been included in the unit base frame. Minimum fork length is 72" to prevent damage to the unit.

Provisions for forks have been included in the unit base frame. No other fork locations are approved.

WARNING

To prevent possible equipment damage, property damage, personal injury or death, the following bullet points must be observed when installing the unit.

- Unit must be lifted by the four lifting holes located at the base frame corners.
- Lifting cables should be attached to the unit with shackles.
- The distance between the crane hook and the top of the unit must not be less than 60".
- Two spreader bars must span over the unit to prevent damage to the cabinet by the lift cables. Spreader bars must be of sufficient length so that cables do not come in contact with the unit during transport. Remove wood struts mounted beneath unit base frame before setting unit on roof curb. These struts are intended to protect unit base frame from fork lift damage. Removal is accomplished by extracting the sheet metal retainers and pulling the struts through the base of the unit. Refer to rigging label on the unit.

Important: If using bottom discharge with roof curb, ductwork should be attached to the curb prior to installing the unit. Ductwork dimensions are shown in Roof Curb Installation Instructions.

Refer to the Roof Curb Installation Instructions for proper curb installation. Curbing must be installed in compliance with the National Roofing Contractors Association Manual.

Lower unit carefully onto roof mounting curb. While rigging unit, center of gravity will cause condenser end to be lower than supply air end.

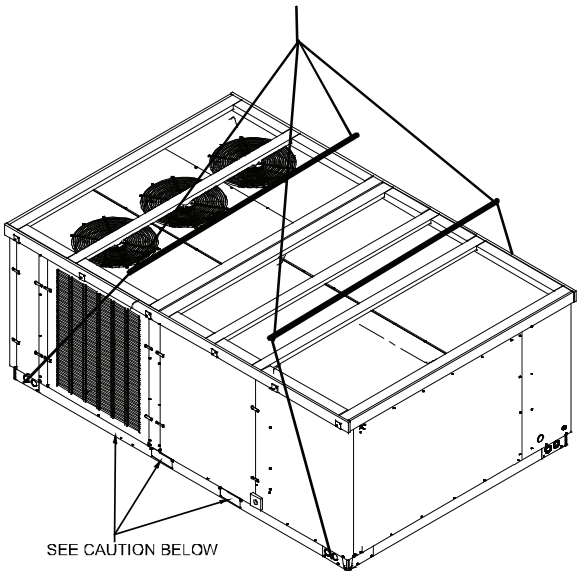

CAUTION

When unit is suspended, boards and shipping brace will drop when screws are removed. To prevent personal injury, STAND CLEAR. Remove fork hole brackets, boards and shipping brace from bottom of unit before placing unit onto curb.

To assist in determining rigging requirements, unit weights are shown as follows:

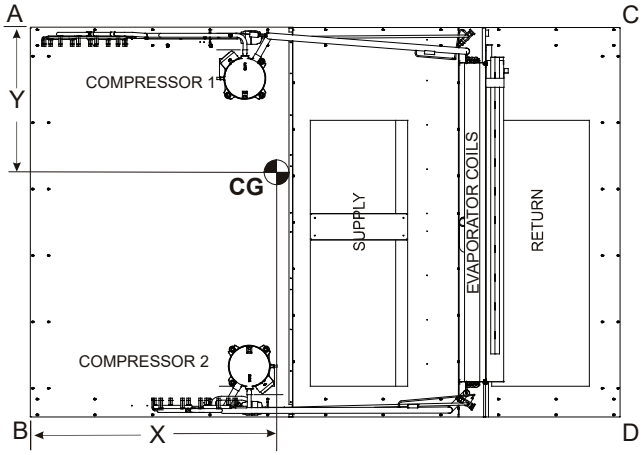

CORNER & CENTER OF GRAVITY LOCATIONS

DATA	DBG Weights (lbs)		
	15 Tons	20 Tons	25 Tons
Corner Weight - A	582	645	627
Corner Weight - B	475	527	525
Corner Weight - C	565	589	604
Corner Weight - D	461	481	521
Unit Shipping Weight	2198	2357	2513
Unit Operating Weight	2083	2242	2283
X (Inches)	65"	63"	65.6"
Y (Inches)	40"	40"	40.5"

A* and B* information

NOTE: These weights are without accessories installed.

CAUTION

To prevent severe damage to the bottom of the unit, do not fork lift unit after wood struts have been removed.

Bring condenser end of unit into alignment with the curb. With condenser end of the unit resting on curb member and using curb as a fulcrum, lower opposite end of the unit until entire unit is seated on the curb. When a rectangular cantilever curb is used, care should be taken to center the unit. Check for proper alignment and orientation of supply and return openings with duct.

Rigging Removal

CAUTION

To prevent damage to the unit, do not allow crane hooks and spreader bars to rest on the roof of the unit.

Remove spreader bars, lifting cables and other rigging equipment.

ELECTRICAL WIRING

WARNING

HIGH VOLTAGE !

Disconnect all power before servicing or installing this unit. Multiple power sources may be present. Failure to do so may cause property damage, personal injury or death.

WARNING

HIGH VOLTAGE !

To avoid personal injury or death due to electrical shock, do not tamper with factory wiring. The internal power and control wiring of these units are factory-installed and have been thoroughly tested prior to shipment. Contact your local representative if assistance is required.

CAUTION

To prevent damage to the wiring, protect wiring from sharp edges. Follow national electrical code and all local codes and ordinances. Do not route wires through removable access panels.

CAUTION

Conduit and fittings must be weather-tight to prevent water entry into the building.

For unit protection, use a fuse or HACR circuit breaker that is in excess of the circuit ampacity, but less than or equal to the maximum overcurrent protection device. DO NOT EXCEED THE MAXIMUM OVERCURRENT DEVICE SIZE SHOWN ON UNIT DATA PLATE.

All line voltage connections must be made through weatherproof fittings. All exterior power supply and ground wiring must be in approved weatherproof conduit.

The main power supply wiring to the unit and low voltage wiring to accessory controls must be done in accordance with these instructions, the latest edition of the National Electrical Code (ANSI/NFPA 70), and all local codes and ordinances.

The main power supply shall be three-phase, three wire. The unit is factory wired for the voltage shown on the unit's data plate.

NOTE: If supply voltage is 208V, all leads on primary of transformer(s) must be moved from the 230V to the 208V tap.

Main power wiring should be sized for the minimum circuit ampacity shown on the unit's database. Size wires in accordance with the ampacity tables in Article 310 of the National Electrical Code. If long wires are required, it may be necessary to increase the wire size to prevent excessive voltage drop. Wires should be sized for a maximum of 3% voltage drop.

CAUTION

To avoid property damage or personal injury due to fire, use only copper conductors.

CAUTION

To prevent improper and dangerous operation due to wiring errors, label all wires prior to disconnection when servicing controls. Verify proper operation after servicing.

NOTE: A weather-tight disconnect switch, properly sized for the unit total load, must be field or factory installed. An external field supplied disconnect may be mounted on the exterior panel.

Ensure the data plate is not covered by the field-supplied disconnect switch.

- Some disconnect switches are not fused. Protect the power leads at the point of distribution in accordance with the unit data plate.
- The unit must be electrically grounded in accordance with local codes or, in the absence of local codes, with the latest edition of the National Electrical Code (ANSI-NFPA 70). A ground lug is provided for this purpose. Size grounding conductor in accordance with Table 250-95 of the National Electrical Code. Do not use the ground lug for connecting a neutral conductor.
- Connect power wiring to the electrical middle contactor within the main control box of power block, if equipped.

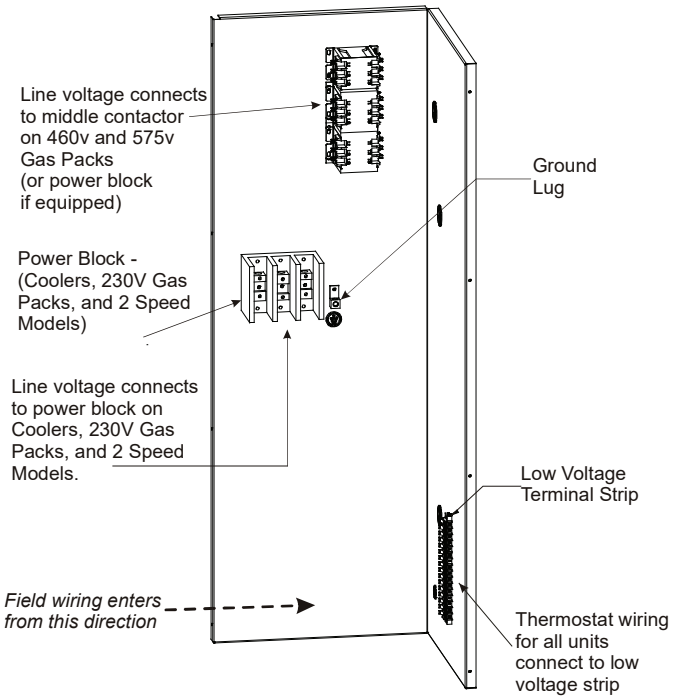

POWER AND LOW VOLTAGE BLOCK LOCATIONS

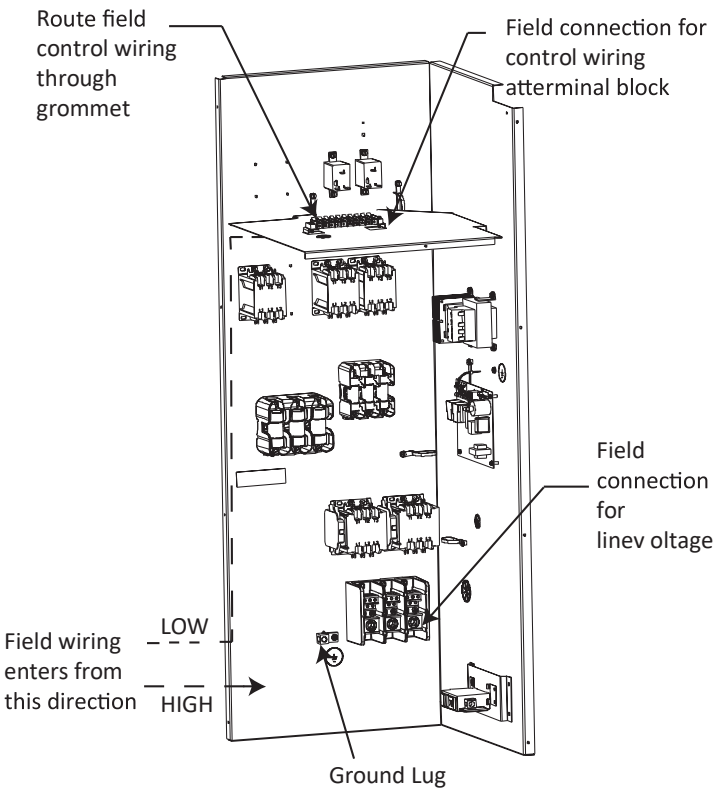

25 TONS MODEL POWER AND LOW VOLTAGE BLOCK LOCATIONS

NOTE: Depending on the options installed, the location of the components may vary in some models.

WARNING

FAILURE OF UNIT DUE TO OPERATION ON IMPROPER LINE VOLTAGE OR WITH EXCESSIVE PHASE UNBALANCE CONSTITUTES PRODUCT ABUSE AND IS NOT COVERED BY THE WARRANTY. IT MAY CAUSE SEVERE DAMAGE TO THE UNIT ELECTRICAL COMPONENTS.

Areas Without Convenience Outlet

It is recommended that an independent 115V power source be brought to the vicinity of the roof top unit for portable lights and tools used by the service mechanic.

NOTE: Refer to local codes for requirements. These outlets can also be factory installed.

Units installed on Roof Tops

Main power and low voltage wiring may enter the unit through the side or through the roof curb. Install conduit connectors at the desired entrance locations. External connectors must be weatherproof. All holes in the unit base must be sealed (including those around conduit nuts) to prevent water leakage into building. All required conduit and fittings are to be field supplied.

Supply voltage to roof top unit must not vary by more than 10% of the value indicated on the unit data plate. Phase voltage unbalance must not exceed 2%. Contact your local power company for correction of improper voltage or phase unbalance.

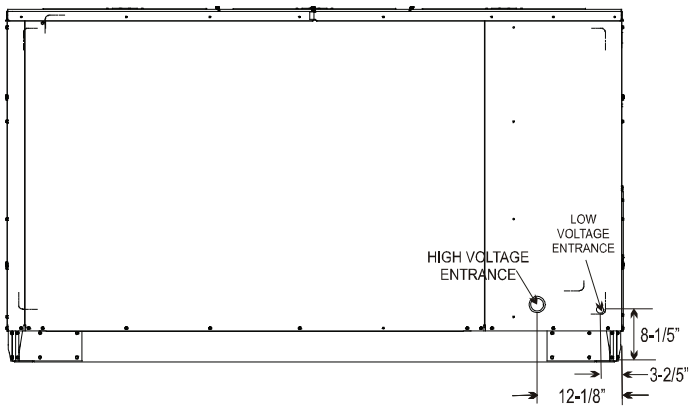

ELECTRICAL ENTRANCE LOCATIONS

Unit is equipped with a Low Voltage Terminal Block and has Single Point wiring to the contactor.

Low Voltage Control Wiring

1. A 24V thermostat must be installed for unit operation. It may be purchased with the unit or field -supplied. Thermostats may be programmable or electromechanical as required.
2. Locate thermostat or remote sensor in the conditioned space where it will sense average temperature. Do not locate the device where it may be directly exposed to supply air, sunlight or other sources of heat. Follow installation instructions packaged with the thermostat.
3. Use #18 AWG wire for 24V control wiring runs not exceeding 75 feet. Use #16 AWG wire for 24V control wiring runs not exceeding 125 feet. Use #14 AWG wire for 24V control wiring runs not exceeding 200 feet. Low voltage wiring may be National Electrical Code (NEC) Class 2 where permitted by local codes.
4. Route thermostat wires from sub-base terminals to the unit. Control wiring should enter through the duct panel (dimple marks entrance location). Connect thermostat and any accessory wiring to low voltage terminal block TB1 in the main control box.

NOTE: Field-supplied conduit may need to be installed depending on unit/curb configuration. Use #18 AWG solid conductor wire whenever connecting thermostat wires to terminals on sub-base. DO NOT use larger than #18 AWG wire. A transition to #18 AWG wire may be required before entering thermostat sub-base.

NOTE: Refer to unit wiring diagrams for thermostat hookups.

GAS SUPPLY PIPING

WARNING

To prevent personal injury or death due to improper installation, adjustment, alteration, service or maintenance, refer to this manual. For additional assistance or information, consult a qualified installer, service agency or the gas supplier.

IMPORTANT NOTE: This unit is factory set to operate on natural gas at the altitudes shown on the rating plate.

WARNING

To prevent property damage, personal injury or death when either using propane gas alone or at higher altitudes, obtain and install the proper conversion kit(s). Failure to do so can result in unsatisfactory operation and/or equipment damage. High altitude kits are for U.S. Installations only and are not approved for use in Canada.

The rating plate is stamped with the model number, type of gas and gas input rating. Make sure the unit is equipped to operate on the type of gas available. Conversion to propane (LP) gas is permitted with the use of the factory authorized conversion kit (see the unit Technical Manual for the appropriate kit). For High Altitude derates, refer to the latest edition of the National Fuel Gas Code NFPA 54/ ANSI Z223.1.

INLET GAS PRESSURE	
NATURAL	Min. 5.0" W.C., Max. 10.0" W.C.
PROPANE	Min. 11.0" W.C., Max. 14.0" W.C.

Inlet Gas Pressure Must Not Exceed the Maximum Value Shown in Table Above.

The minimum supply pressure should not vary from that shown in the table above because this could prevent the unit from having dependable ignition. In addition, gas input to the burners must not exceed the rated input shown on the rating plate. Overfiring of the unit could result in premature heat exchanger failure.

Piping

IMPORTANT NOTE: To avoid possible unsatisfactory operation or equipment damage due to under firing of equipment, do not undersize the natural/propane gas piping from the meter/tank to the unit. When sizing a trunk line, include all appliances on that line that could be operated simultaneously.

The rating plate is stamped with the model number, type of gas and gas input rating. Make sure the unit is equipped to operate on the type of gas available. The gas line installation must comply with local codes, or in the absence of local codes, with the latest edition of the National Fuel Gas Code NFPA 54/ANSI Z223.1.

Natural Gas Connection

Natural Gas Capacity of Pipe in Cubic Feet of Gas Per Hour (CFH)					
Length of Pipe in Feet	Nominal Black Pipe Size (inches)				
	1/2	3/4	1	1 1/4	1 1 /2
10	132	278	520	1050	1600
20	92	190	350	730	1100
30	73	152	285	590	980
40	63	130	245	500	760
50	56	115	215	440	670
60	50	105	195	400	610
70	46	96	180	370	560
80	43	90	170	350	530
90	40	84	160	320	490
100	38	79	150	305	460

Pressure= .50 PSIG or less and Pressure Drop of 0.3" W.C.
(Based on 0.60 Specific Gravity Gas)

$$\text{CFH} = \frac{\text{BTUH Furnace Input}}{\text{Heating Value of Gas (BTU/Cubic Foot}}$$

Refer to the Proper Piping Practice drawing for the general layout at the unit. The following rules apply:

1. Use black iron pipe and fittings for the supply piping. The use of a flex connector and/or copper piping is permitted as long as it is in agreement with local codes.
2. Use pipe joint compound on male threads only. Pipe joint compound must be resistant to the action of the fuel used.
3. Use ground joint unions.
4. Install a drip leg to trap dirt and moisture before it can enter the gas valve. The drip leg must be a minimum of three inches long.
5. Use two pipe wrenches when making connection to the gas valve to keep it from turning.
6. Install a manual shut-off valve in a convenient location (within six feet of unit) between the meter and the unit.
7. Tighten all joints securely.
8. The unit must be connected to the building piping by one of the following methods:

- Rigid metallic pipe and fittings
- Semirigid metallic tubing and metallic fittings (Aluminum alloy tubing must not be used in exterior locations)
- Listed gas appliance connectors used in accordance with the terms of their listing that are completely in the same room as the equipment
- In the prior two methods above the connector or tubing must be protected from physical and thermal damage. Aluminum alloy tubing and connectors must be coated to protect against external corrosion when in contact with masonry, plaster or insulation or are subject to repeated wettings by liquids (water - not rain water, detergents or sewage).

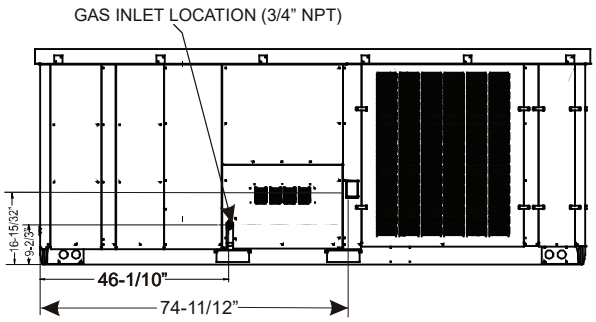

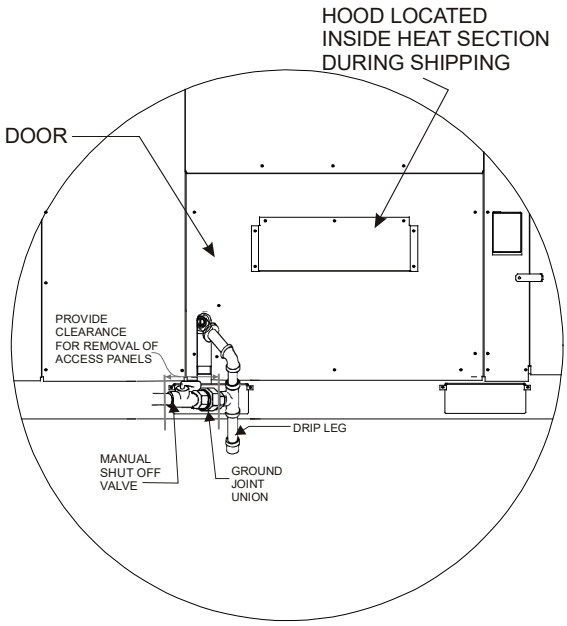

PROPER PIPING PRACTICE

NOTE: The unit gas supply entrance is factory sealed with plugs. Keep plugs in place until gas supply is ready to be installed. Once ready, replace the plugs with the supplied grommets and install gas supply line.

Gas Piping Checks

CAUTION

To prevent property damage or personal injury due to fire, the following instructions must be performed regarding gas connections and pressure testing:

- **The unit and its gas connections must be leak tested before placing in operation. Because of the danger of explosion or fire, never use a match or open flame to test for leaks. Never exceed specified pressures for testing. Higher pressure may damage gas valve and cause overfiring which may result in premature heat exchange failure.**
- **This unit and its shut-off valve must be disconnected from the gas supply during any pressure testing of that system at test pressures in excess of 1/2 PSIG (3.48 kPa).**
- **This unit must be isolated from the gas supply system by closing its manual shut-off valve during any pressure testing of the gas supply piping system at test pressures equal to or less than 1/2 PSIG (3.48 kPa).**

WARNING

To avoid property damage or personal injury, be sure there is no open flame in the vicinity during air bleeding.

There will be air in the gas supply line after testing for leaks on a new installation. Therefore, the air must be bled from the line by loosening the ground joint union until pure gas is expelled. Tighten union and wait for five minutes until all gas has been dissipated in the air. Be certain there is no open flame in the vicinity during air bleeding procedure. The unit is placed in operation by closing the main electrical disconnect switch for the unit.

PROPANE GAS INSTALLATIONS

WARNING

To avoid property damage, personal injury or death due to fire or explosion caused by a propane gas leak, install a gas detecting warning device. Since rust can reduce the level of odorant in propane gas, a gas detecting warning device is the only reliable way to detect a propane gas leak. Contact a local propane gas supplier about installing a gas detecting warning device.

IMPORTANT NOTE: Propane gas conversion kits must be installed to convert units to propane gas.

All propane gas equipment must conform to the safety standards of the National Board of Fire Underwriters (See NBFU Manual 58). Line pressure 11.3 - 14” w.c.

For satisfactory operation, propane gas manifold pressure must be within 9.7 - 10.3 inches w.c. for high fire and within 6.7 - 7.3 inches w.c. low fire at the manifold with all gas appliances in operation. Maintaining proper gas pressure depends on three main factors:

1. Vaporization rate, which depends on (a) temperature of the liquid, and (b) wetted surface area of the container or containers.
2. Proper pressure regulation.
3. Pressure drop in lines between regulators, and between second stage regulator and the appliance. Pipe size required will depend on length of pipe run and total load of all appliances.

Tanks and Piping

Complete information regarding tank sizing for vaporization, recommended regulator settings and pipe sizing is available from most regulator manufacturers and propane gas suppliers.

Since propane gas will quickly dissolve white lead or most standard commercial compounds, special pipe dope must be used. Shellac base compounds resistant to the actions of liquefied petroleum gases such as Gasolac®, Stalactic®, Clyde’s® or John Crane® are satisfactory.

See following figure for typical propane gas piping.

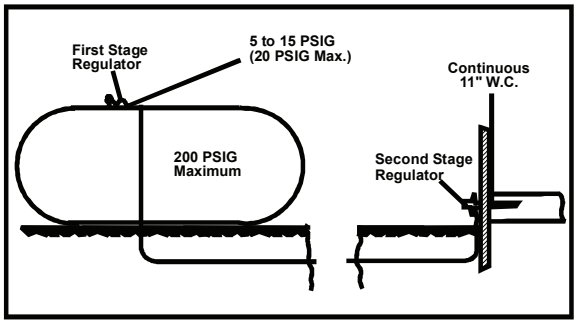

TYPICAL PROPANE GAS PIPING

Roof Top Location and Installation

The gas supply piping location and installation for roof top units must be in accordance with local codes or, in the absence of locals codes, with ordinances of the latest edition of the National Fuel Gas Code (ANSI Z223.1).

A manual gas shut off valve must be field installed external to the roof top unit. In addition, a drip leg must be installed near the inlet connection. A ground joint union connection is required between the external shut off valve and the unit connection to the gas valve to permit removal of the burner assembly for servicing.

1. Route gas piping to unit so that it does not interfere with the removal of access panels. Support and align piping to prevent strains or misalignment of the manifold assembly.
2. All units are furnished with standard female NPT pipe connections. Connection pipe size is 3/4” NPT. The size of the gas supply piping to the unit must be based on length of run, number of units on the system, gas characteristics, BTU requirement and available supply pressure. All piping must be done in accordance with local codes or, in the absence of local codes, with the latest edition of the National Fuel Gas Code (ANSI Z223.1).

   NOTE: The gas connection size at the unit does NOT establish the size of the supply line.

3. These units are designed for either natural or propane (LP) gas and are specifically constructed at the factory for only one of these fuels. The fuels are NOT interchangeable. However, the furnace can be converted in the field from natural gas to LP gas with the appropriate factory kit (see unit Technical Manual for the appropriate kit). Only a qualified contractor, experienced with natural and propane gas systems, should attempt conversion. Kit instructions must be followed closely to assure safe and reliable unit operation.
4. With all units on a common line operating under full fire, natural gas main supply pressure should be adjusted to approximately 7.0" w.c., measured at the unit gas valve. If the gas pressure at the unit is greater than 10.5" w.c., the contractor must furnish and install an external type positive shut off service pressure regulator. The unit will not function satisfactorily if supply gas pressure is less than 5.5" w.c. or greater than 10.5" w.c..

   NOTE: A minimum horizontal distance of 48" between the regulator and the furnace flue discharge is required.
5. With all units on a common line operating under full LP gas main supply pressure should be at least 11.0" w.c. and must be no greater than 14.0" w.c., measured at the unit gas valve. Unit will not function satisfactorily if supply gas pressure is less than 11.0" w.c. or greater than 14.0" w.c..
6. All pipe connections should be sealed with a pipe thread compound, which is resistant to the fuel used with the furnace. A soapy water solution should be used to check all joints for leaks. A 1/8" NPT plugged tap is located on the entering side of the gas valve for test gauge connection to measure supply (main) gas pressure. Another 1/8" tap is provided on the side of the manifold for checking manifold pressure.

⚠ WARNING

THIS UNIT AND ITS INDIVIDUAL SHUTOFF VALVE MUST BE DISCONNECTED FROM THE GAS SUPPLY SYSTEM DURING ANY PRESSURE TESTING OF THAT SYSTEM AT TEST PRESSURES IN EXCESS OF 1/2 PSIG (13.8" W.C.).

⚠ CAUTION

THIS UNIT MUST BE ISOLATED FROM THE GAS SUPPLY PIPING SYSTEM BY CLOSING ITS INDIVIDUAL MANUAL SHUTOFF VALVE DURING ANY PRESSURE TESTING EQUAL TO OR LESS THAN 1/2 PSIG.

7. There must be no obstruction to prevent the flow of combustion and ventilating air. A vent stack is not required and must never be used. The power ventor will supply an adequate amount of combustion air as long as the air passageways are kept free of any obstructions and the recommended external unit clearances are maintained.

CIRCULATING AIR AND FILTERS

DUCTWORK

The supply duct should be provided with an access panel large enough to inspect the air chamber downstream of the heat exchanger. A cover should be tightly attached to prevent air leaks.

Ductwork dimensions are shown in the roof curb installation manual.

If desired, supply and return duct connections to the unit may be made with flexible connections to reduce possible unit operating sound transmission.

VENTING

NOTE: Venting is self-contained.

CONDENSATE DRAIN CONNECTION

CONDENSATE DRAIN CONNECTION

A 1" female NPT drain connection is supplied on the end of the condensate pan, with an alternative connection on the bottom of the pan. An extrnal trap must be installed for proper condensate drainage.

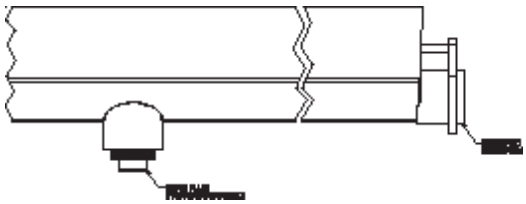

Drain Pan (Side View)

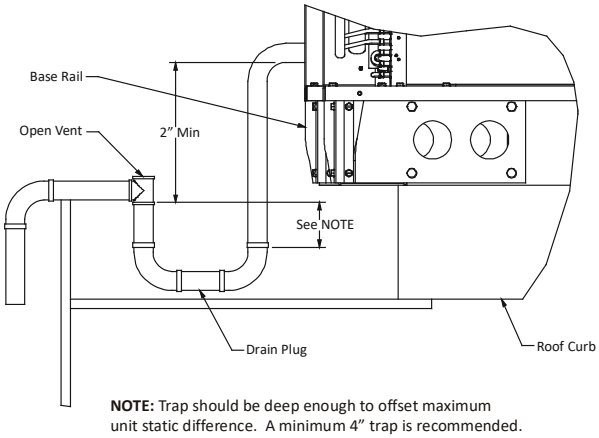

NOTE: Trap should be deep enough to offset maximum unit static difference. A minimum 4" trap is recommended.

DRAIN CONNECTION

Install condensate drain trap as shown. Use 1" drain line and fittings or larger. Do not operate without trap.

HORIZONTAL DRAIN

Drainage of condensate directly onto the roof may be acceptable; (refer to local code). It is recommended that a small drip pad of either stone, mortar, wood or metal be provided to prevent any possible damage to the roof. When using the horizontal drain connection, check the drain plug in bottom connection to ensure it is tight.

CLEANING

Due to the fact that drain pans in any air conditioning unit will have some moisture in them, algae and fungus will grow due to airborne bacteria and spores. Periodic cleaning is necessary to prevent this build-up from plugging the drain.

STARTUP, ADJUSTMENTS, AND CHECKS

WARNING

HIGH VOLTAGE!

TO AVOID PERSONAL INJURY OR DEATH DUE TO ELECTRICAL SHOCK, BOND THE FRAME OF THIS UNIT TO THE BUILDING ELECTRICAL GROUND BY USE OF THE GROUNDING TERMINAL PROVIDED OR OTHER ACCEPTABLE MEANS. DISCONNECT ALL POWER BEFORE SERVICING OR INSTALLING THIS UNIT.

PRE-STARTUP INSTRUCTIONS - GENERAL

CAUTION

TO PREVENT PROPERTY DAMAGE OR PERSONAL INJURY, DO NOT START THE UNIT UNTIL ALL NECESSARY PRE-CHECKS AND TEST HAVE BEEN PERFORMED.

Prior to the beginning of Startup, Adjustments, and Checks procedures, the following steps should be completed in the building.

WARNING

MOVING MACHINERY HAZARD!

TO PREVENT POSSIBLE PERSONAL INJURY OR DEATH, DISCONNECT POWER TO THE UNIT AND PADLOCK IN THE "OFF" POSITION BEFORE SERVICING FANS.

This unit is equipped with an electronic ignition device to automatically light the main burners. It also has a power vent blower to exhaust combustion products.

On new installations, or if a major component has been replaced, the operation of the unit must be checked.

Check unit operation as outlined in the following instructions. If any sparking, odors, or unusual sounds are encountered, shut off electrical power and recheck for wiring errors, or obstructions in or near the blower motors. **Duct covers must be removed before operating unit.**

The Startup, Adjustments, and Checks procedure provides a step-by-step sequence which, if followed, will assure the proper startup of the equipment in the minimum amount of time. Air balancing of duct system is not considered part of this procedure. However, it is an important phase of any air conditioning system startup and should be performed upon completion of the Startup, Adjustments, and Checks procedure. The Startup, Adjustments, and Checks procedure at outside ambients below 55°F should be limited to a readiness check of the refrigeration system with the required final check and calibration left to be completed when the outside ambient rises above 55°F.

TEMPORARY HEATING OR COOLING

If the unit is to be used for temporary heating or cooling, a "Startup, Adjustments, and Checks" must first be performed in accordance with this manual. Damage or repairs due to failure to comply with these requirements are not covered under the warranty. **After** the machines are used for temporary heating or cooling, inspect the coils, fans, and motors for unacceptable levels of construction dust and dirt and install new filters.

CONTRACTOR RESPONSIBILITY

The installing contractor must be certain that:

- All supply and return air ductwork is in place, properly sealed, and corresponds with installation instructions.
- All thermostats are mounted and wired in accordance with installation instructions.
- All electric power, all gas, hot water or steam line connections, and the condensate drain installation have been made to each unit on the job. These main supply lines must be functional and capable of operating all units simultaneously.
- Requirements are met for venting and combution air.
- Air filters are in place.
- Input rate and temperature rise are adjusted per rating plate.

ROOF CURB INSTALLATION CHECK

Inspect the roof curb for correct installation. The unit and curb assembly should be level. Inspect the flashing of the roof mounting curb to the roof, especially at the corners, for good workmanship. Also check for leaks around gaskets. Note any deficiencies in a separate report and forward to the contractor.

OBSTRUCTIONS, FAN CLEARANCE AND WIRING

Remove any extraneous construction and shipping materials that may be found during this procedure. Rotate all fans manually to check for proper clearances and that they rotate freely. Check for bolts and screws that may have jarred loose during shipment to the job site. Retighten if necessary. Re-tighten all electrical connections.

FIELD DUCT CONNECTIONS

Verify that all duct connections are tight and that there is no air bypass between supply and return.

FILTER SECTION CHECK

Remove filter section access panels and check that filters are properly installed. Note airflow arrows on filter frames.

PRE-STARTUP PRECAUTIONS

It is important to your safety that the unit has been properly grounded during installation. Check ground lug connection in main control box for tightness prior to closing circuit breaker or disconnect switch. Verify that supply voltage on line side of disconnect agrees with voltage on unit identification plate and is within the utilization voltage range as indicated in Appendix C Electrical Data.

System Voltage - That nominal voltage value assigned to a circuit or system for the purpose of designating its voltage class.

Nameplate Voltage - That voltage assigned to a piece of equipment for the purpose of designating its voltage class and for the purpose of defining the minimum and maximum voltage at which the equipment will operate.

Utilization Voltage - The voltage of the line terminals of the equipment at which the equipment must give fully satisfactory performance. Once it is established that supply voltage will be maintained within the utilization range under all system conditions, check

and calculate if an unbalanced condition exists between phases. Calculate percent voltage unbalance as follows:

Three Phase Models

$$\text{3) PERCENT VOLTAGE UNBALANCE} = 100 \times \frac{\text{2) MAXIMUM VOLTAGE DEVIATIONS FROM AVERAGE VOLTAGE}}{\text{1) AVERAGE VOLTAGE}}$$

HOW TO USE THE FORMULA:
EXAMPLE: With voltage of 220, 216, and 213
1) Average Voltage = 220+216+213=649 / 3 = 216
2) Maximum Voltage Deviations from Average Voltage = 220 - 216 = 4

$$\text{3) Percent Voltage Unbalance} = 100 \times \frac{4}{216} = \frac{400}{216} = 1.8\%$$

Percent voltage unbalance MUST NOT exceed 2%.

Control Voltage Check

Close the disconnect switch to energize control transformer. Check primary and secondary (24V) of control transformer.

AIR FLOW ADJUSTMENTS

Refer to the following "Motor Sheave Adjustments" section.

When the final adjustments are complete, the current draw of the motor should be checked and compared to the full load current rating of the motor. The amperage must not exceed the service factor stamped on the motor nameplate. The total airflow must not be less than that required for operation of the electric heaters or the furnace.

If an economizer is installed, check the unit operating balance with the economizer at full outside air and at minimum outside air.

NOTE: Airflow setting below 300 CFM/Ton is not recommended, as evaporator freezing or poor unit performance is possible.

For 2-speed models, airflow adjustments must be made with the evaporator motor operating at high speed (in 2nd stage cooling or in heat mode). 2-speed models have a "V" OR "W" in the 8TH digit of the model number (e.g. DBG3003***V***).

Evaporator Fan Rotation Check

Check that fan rotates clockwise when viewed from the drive side of unit and in accordance with rotation arrow shown on blower housing. If it does not, reverse any two incoming power cables at Single Point Power Block. In this case, repeat bearing check.

Do not attempt to change load side wiring. Internal wiring assures all motors and compressors will rotate in correct direction once evaporator fan motor rotation check has been made.

Electrical Input Check

Make preliminary check of evaporator fan ampere draw and verify that motor nameplate amps are not exceeded. A final check of amp draw should be made upon completion of air balancing of the duct system (see Appendix B).

Set Evaporator Fan Rpm

Actual RPM's must be set and verified with a tachometer or strobe light. Refer to Appendices A and B for basic unit fan RPM. Refer also to "Airflow" section of this manual. With disconnect switch open, disconnect thermostat wires from terminals Y and W. This will prevent heating and mechanical cooling from coming on. Place a jumper wire across terminals R and G at TB1 terminal block. Close disconnect switch; evaporator fan motor will operate so RPM can be checked.

For gas heat units, the airflow must be adjusted so that the air temperature rise falls within the ranges given stated on Data Plate (see Appendix A - Blower Performance).

The drive on the supply fan is typically set in the middle of the RPM range. The drive motor sheave pitch diameter is field adjustable for the required airflow. Refer to "Motor Sheave Adjustments" section.

Upon completion of the air flow balancing, we recommend replacing the variable pitched motor sheave with a properly-sized fixed sheave. A matching fixed sheave will provide longer belt and bearing life and vibration free operation. Initially, it is best to have a variable pitched motor sheave for the purpose of airflow balancing, but once the balance has been achieved, fixed sheaves maintain alignment and minimize vibration more effectively.

Bearing Check

Prior to energizing any fans, check and make sure that all setscrews are tight so that bearings are properly secured to shafts.

Tension and Alignment Adjustment

Correct belt tension is very important to the life of your belt. Too loose a belt will shorten its life; too tight, premature motor and bearing failure will occur. Check you belt drive for adequate "run-in" belt tension by measuring the force required to deflect the belt at the midpoint of the span length. Belt tension force can be measured using a belt tension gauge, available through most belt drive manufacturers.

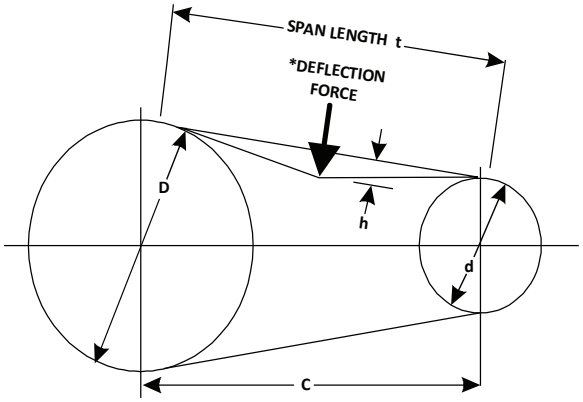

Apply force to the center of the span.

t = Span length, inches
C = Center distance, inches
D = Larger sheave diameter, inches
d = Smaller sheave diameter, inches
h = Deflection height, inches

DRIVE BELT TENSION ADJUSTMENT

MODEL	TYPE		SHEAVE DIAMETER (in)	DEFLECTION FORCE (lbs)		DEFLECTION (in)
	BELT	DRIVE		Used	New	
15 Ton	B, BA	Standard	4.3 to 5.5	5.5 ± .5	8.2 ± .5	1/4 ± 1/16
20 Ton	B, BA	Standard	4.3 to 5.5	5.5 ± .5	8.2 ± .5	1/4 ± 1/16
25 Ton	B, BA	Standard	5.1 to 6.1	5.5 ± .5	8.2 ± .5	1/4 ± 1/16

RECOMMENDED POUNDS OF FORCE PER BELT

When new V-belts are installed on a drive the initial tension will drop rapidly during the first few hours. Check tension frequently during the first 24 hours of operation. Subsequent retensioning should fall between the minimum and maximum force. To determine the deflection distance from the normal position, use a straightedge or stretch a cord from sheave to sheave to use as a reference line. On multiple belt drives, an adjacent undeflected belt can be used as a reference.

MOTOR SHEAVE ADJUSTMENTS

VL, VM & 2VP Variable Pitch Key Type Motor Sheaves

The driving and driven motor sheaves should be in alignment with each other and the shafts parallel.

VL & VM Sheaves Adjustment

1. Loosen set screw "B" using a 5/32" Allen key.
2. Making half or full turns from closed position, adjust sheave pitch diameter for desired speed. DO NOT OPEN MORE THAN SIX FULL TURNS.
3. Tighten set screw "B" securely over flat.
4. Carefully put on belts and adjust belt tension. DO NOT FORCE BELTS OVER GROOVES.
5. Ensure all keys are in place and the set screws tight before starting drive. Recheck set screws and belt tension after 24 hours service.

NOTE: Future adjustments should be made by loosening the belt tension and increasing or decreasing the pitch diameter of the sheave by half or full turns as required. Readjust belt tension before starting drive.

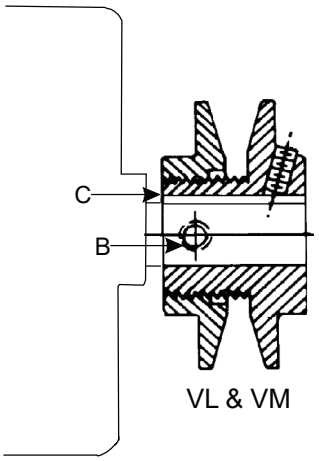

NOTE: Do not operate sheave with flange projecting beyond the hub end.

GAS SYSTEM CHECK

Pre-Operation Checks

1. Close the manual gas valve external to the unit.
2. Turn off the electrical power supply to the unit.
3. Set the room thermostat to its lowest possible setting.
4. Remove the heat exchanger door on the side of the unit by removing screws.
5. This unit is equipped with an ignition device which automatically lights the main burner. DO NOT try to light burner by any other method.
6. Move the gas control valve switch to the OFF position. Do not force.
7. Wait five minutes to clear out any gas.
8. Smell for gas, including near the ground. This is important because some types of gas are heavier than air. If you have waited five minutes and you do smell gas, immediately follow the warnings on page 3 of this manual. If having waited for five minutes and no gas smell is noted, move the gas control valve switch to the ON position.
9. Replace the heat exchanger door on the side of the unit.
10. Open the manual gas valve external to the unit.
11. Turn on the electrical power supply to the unit.
12. Set the thermostat to desired setting.

Gas Supply Pressures & Regulator Adjustments

WARNING

Should overheating occur or the gas supply fail to shut off, turn off the manual gas shutoff valve external to the unit before turning off the electrical supply.

WARNING

To avoid property damage, personal injury or death, do not fire gas unit with flue box cover removed.

NOTE: Except during brief periods when gas pressures are being measured by qualified service personnel, the furnace access panel must always be secured in place when the furnace is in operation. An inspection port in the access panel is provided to monitor the flame.

The first step in checking out the gas-fired furnace is to test the gas supply piping to the unit for tightness and purge the system of air using methods outlined in the latest edition of the National Fuel Gas Code ANSI Z223.1. Verify that the disconnect switch is in the "OFF" position. A soapy water solution should be used to check for gas leaks. Since the unit is subject to considerable jarring during shipment, it is extremely important that all gas connections and joints be tested for tightness. Gas piping downstream from the unit inlet should be checked for leaks during the subsequent sequence check.

The supply gas pressure should be adjusted to 7.0" w.c. on natural gas and 11.0" on LP gas with the gas burners operating. If there is more than one unit on a common gas line, the pressures should be checked with all units under full fire. A supply pressure tap is

provided on the upstream side of the gas valve. A manifold pressure tap is provided on the manifold. The normal manifold pressure for full input is 3.5” w.c. on natural gas and 10.0” w.c. for propane gas. Minimum gas supply pressure is 5.5” w.c. for natural gas and 11.0” for propane gas. In order to obtain rating, gas supply pressure must be 11.0” w.c. for propane gas.

The pressure regulator on LP gas models is adjusted for 10.0” w.c. manifold pressure and is intended to prevent over-firing only. Do not attempt adjustment of the built-in pressure regulator unless the supply pressure is at least 7.0” w.c. on natural gas or 14.0” w.c. on propane gas. Check the location of the ignition electrode and the flame sensor for correct gap setting.

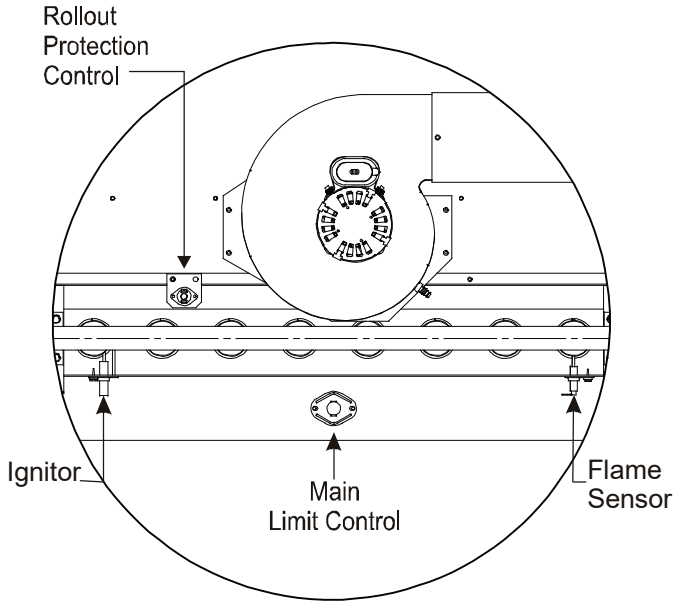

MAXIMUM INPUT (BTUH)	NUMBER of BURNERS	MAXIMUM BTUH/BURNER	GAS ORIFICES	
			NATURAL	PROPANE (LP)
350,000	7	50,000	#30	#48
400,000	8	50,000	#30	#48

HEAT EXCHANGER AND BURNER ORIFICE SPECIFICATIONS

NOTE: Gas appliances located more than 2000 feet above sea level must be derated 4% per 1000 feet of total elevation and that variance in gas heating value and specific gravity require change in manifold pressure to obtain rating, it is mandatory that the input be adjusted at the installation site. All installations should be made as outlined in the latest edition of the National Fuel Gas Code ANSI Z223.1, section “Procedures To Be Followed To Place An Appliance in Operation”. Refer also to the “User’s Information Manual” supplied with the unit for additional information on the gas furnace.

Gas Supply And Manifold Check

Gas supply pressure and manifold pressure with the burners operating must be as specified on the rating plate.

Gas Inlet Pressure Check

Gas inlet pressure must be checked and adjusted in accordance to the type of fuel being consumed.

With Power And Gas Off:

1. Connect a water manometer or adequate gauge to the inlet pressure tap of the gas valve.

   Inlet gas pressure can also be measured by removing the cap from the dripleg and installing a predrilled cap with a hose fitting.

With Power And Gas On:

2. Put unit into heating cycle and turn on all other gas consuming appliances.

INLET GAS PRESSURE	
NATURAL	Min. 5.0" W.C., Max. 10.0" W.C.
PROPANE	Min. 11.0" W.C., Max. 14.0" W.C.

NOTE: Inlet Gas Pressure Must Not Exceed the Maximum Value Shown.

If operating pressures differ from above, make necessary pressure regulator adjustments, check piping size, etc., and/or consult with local utility.

Manifold Pressure Check

The gas valve has a tapped opening to facilitate measurement of the manifold pressure. A “U” Tube manometer having a scale range from 0 to 12 inches of water should be used for this measurement. The manifold pressure must be measured with the burners operating.

To adjust the pressure regulator, remove the adjustment screw or cover on the gas valve. Turn out (counterclockwise) to decrease pressure, turn in (clockwise) to increase pressure. Only small variations in gas flow should be made by means of the pressure regulator adjustment. In no case should the final manifold pressure vary more than plus or minus 0.3 inches water column from the specified nominal pressure. Any major changes in flow should be made by changing the size of the burner orifices. The measured input rate to the furnace must not exceed the rating specified on the unit rating plate.

For natural gas, the manifold pressure must be between 3.2 and 3.8 inches w.c. (3.5 nominal) for high fire and between 1.7 and 2.3 inches w.c. (2.0 nominal) for low fire.

For propane gas, the manifold pressure must be between 9.7 and 10.3 inches w.c. (10.0 nominal) for high fire and between 6.7 and 7.3 inches w.c. (7.0 nominal) for low fire.

Gas Input (Natural Gas Only) Check

It is the responsibility of the contractor to adjust the gas input to the unit.

To measure the gas input use a gas meter and proceed as follows:

1. Turn off gas supply to all other appliances except the unit.
2. With the unit operating, time the smallest dial on the meter for one complete revolution. If this is a 2 cubic foot dial, divide the seconds by 2; if it is a 1 cubic foot dial, use the seconds as is. This gives the seconds per cubic foot of gas being delivered to the unit.

3. INPUT=GAS HTG VALUE x 3600 / SEC. PER CUBIC FOOT

Example: Natural gas with a heating value of 1000 BTU per cubic foot and 34 seconds per cubic foot as determined by Step 2, then:

Input = 1000 x 3600 / 34 = 106,000 BTU per Hour. **NOTE:** BTU content of the gas should be obtained from the gas supplier. This measured input must not be greater than shown on the unit rating plate.

Adjust input rate by varying the adjustment of the gas pressure regulator on the gas valve. All adjustments must be made with furnace operating at high fire and at normal operating temperature. A manometer should be connected to the gas valve to verify pressure is within the specified range (see following figures for manometer connections). Clockwise rotation of the pressure regulator screw increases pressure and gas flow rate. Turn screw counterclockwise to decrease pressure and gas flow rate. After adjustment the furnace temperature rise must be within the range specified on the unit data plate. **NOTE:** Thermal efficiency of the furnace is a product efficiency rating determined under continuous operating conditions independent of any installed system.

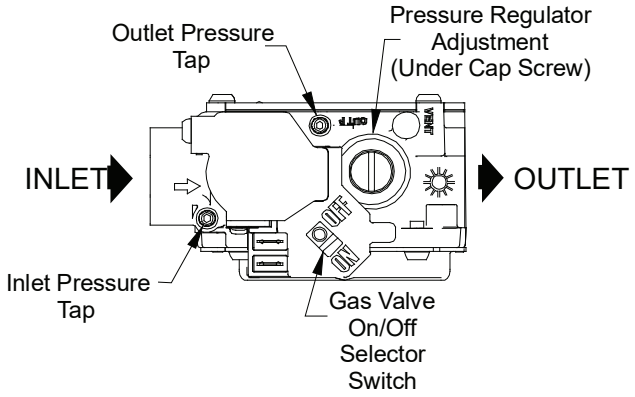

WHITE-RODGERS 36G22 - SINGLE STAGE

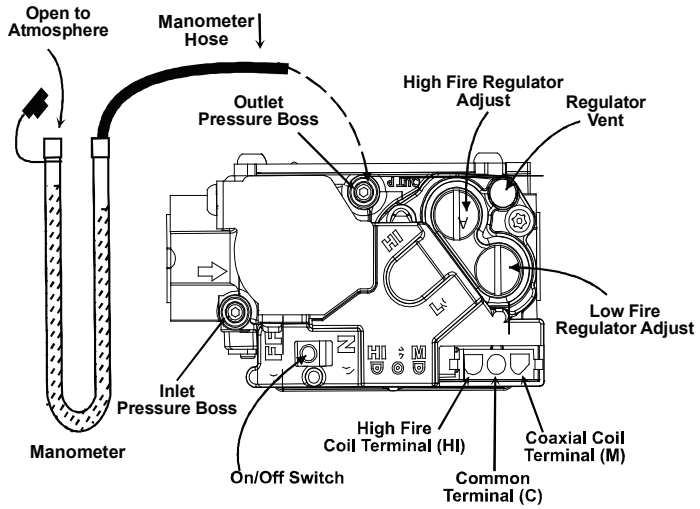

WHITE-RODGERS 36G54 (2-STAGE) CONNECTED TO MANOMETER PRESSURE ADJUSTMENTS

TO CONNECT MANOMETER TO GAS VALVE:

1. Back outlet pressure test screw (inlet/outlet pressure boss) out one turn (counterclockwise, not more than one turn).
2. Attach a hose and manometer to the outlet pressure boss of the valve.

TO REMOVE MANOMETER FROM GAS VALVE:

1. Remove manometer hose from outlet pressure boss.
2. Turn outlet pressure test screw in to seal pressure port (clockwise, 7 in-lb. minimum).
3. Turn on electrical power and gas supply to the system.
4. Turn on system power and energize valve.
5. Using a leak detection solution or soap suds, check for leaks at pressure boss screw. Bubbles forming indicate a leak. SHUT OFF GAS AND FIX ALL LEAKS IMMEDIATELY.

⚠ CAUTION

TO PREVENT UNRELIABLE OPERATION OR EQUIPMENT DAMAGE, THE GAS MANIFOLD PRESSURE MUST BE AS SPECIFIED ON THE UNIT RATING PLATE. ONLY MINOR ADJUSTMENTS SHOULD BE MADE BY ADJUSTING THE GAS VALVE PRESSURE REGULATOR.

6. Relight all other appliances turned off in step 1. Be sure all pilot burners are operating.

Main Burner Flame Check

Flames should be stable, soft and blue (dust may cause orange tips but they must not be yellow) and extending directly outward from the burner without curling, floating or lifting off.

Temperature Rise Check

Check the temperature rise through the unit by placing thermometers in supply and return air registers as close to the unit as possible. Thermometers must not be able to sample temperature directly from the unit heat exchangers, or false readings could be obtained.

1. All registers must be open; all duct dampers must be in their final (fully or partially open) position and the unit operated for 15 minutes on HIGH FIRE before taking readings.
2. The temperature rise must be within the range specified on the rating plate.

NOTE: Air temperature rise is the temperature difference between supply and return air.

With a properly designed system, the proper amount of temperature rise will normally be obtained when the unit is operated at rated input with the recommended blower speed.

If the correct amount of temperature rise is not obtained, it may be necessary to change the blower speed. A higher blower speed will lower the temperature rise. A slower blower speed will increase the temperature rise.

NOTE: Blower speed MUST be set to give the correct air temperature rise through the unit as marked on the rating plate.

NORMAL SEQUENCE OF OPERATION - HEATING

This unit has one (RS) Manual Reset Limit Control Switch. Check the limit to make sure it has not tripped. The limit may arrive at the job site tripped as a result of shipping shock.

If the vent motor comes on, but the unit does not attempt ignition, check if the ALS (Automatic Reset High Limit Control Switch) requires resetting.

1. With electricity and gas turned on, the system switch

in the "HEAT" or "AUTO" position and the fan switch in the "AUTO" position, the thermostat will close the circuit between unit terminals R and W (R-W) when the temperature falls below the thermostat setting.

2. D1 on IIC energizes relay VMR.
3. Relay VMR energizes the vent motor.
4. Operation of the vent motor closes the pressure switch PS located in the burner compartment. the control then initiates a 15-second pre-purge time delay. During this period, the vent motor will clear the combustion chamber of any residual gas.
5. After the pre-purge period, the ignition control energizes the Wl-C gas valve and simultaneously initiates a "three (3)-try" spark ignition sequence.
6. When the burners are ignited, a minimum four (4) micro-amp DC current will flow through the flame between the sensor electrode and the grounded burner.
7. When the controller proves that the flame has been established, it will keep the gas valve energized and discontinue the ignition spark. First stage manifold pressure will be approximately 2.0" w.c. for natural gas and 7.0" w.c. for propane (LP).
8. If the control is unable to ignite the burners after its initial attempt, it will initiate another purge and spark sequence. A third purge and spark sequence will be initiated if the second attempt is unsuccessful. If the third attempt is unsuccessful, the controller will close the gas valve and lock itself out. It may be reset by momentarily interrupting power. This may be accomplished by briefly lowering the room thermostat set-point below room temperature, or by shutting off the main power to the unit. (See TP-105 for more details.)
9. Integrated ignition control will close its normally open contacts after a delay of approximately 30 seconds. This action energizes contactor BC and starts the supply fan motor. Operation of the supply fan circulates air across the heat exchanger and delivers heated air to the conditioned space.
10. When the space temperature rises, the thermostat will open R-W. Opening R-W will cause the gas valve to close, and the furnace to shut down.
11. The furnace has three high temperature limit controls, which can shut down the burner. They do not shut down the vent motor.

Unit Shutdown

1. Set the thermostat to lowest setting.
2. Turn off the electrical power supply to the unit.
3. Remove the heat exchanger door on the side of the unit by removing screws.
4. Move the gas control valve switch to the OFF position. Do not force.
5. Close manual gas shut off valve external to the unit.
6. Replace the heat exchanger door on the unit.
7. If cooling and/or air circulation will be desired, turn ON the electrical power.

Automatic Reset High Limit Control (LS)

Located in the burner compartment on the heat exchanger, its sensing element projects through the blower section bulkhead and senses the temperature at the rear of the furnace. It will cycle the furnace off if the temperature exceeds 100°F plus maximum rise.

Auxiliary Reset High Limit Control (ALS)

Located in the blower compartment on the blower housing, it senses air temperature within the blower compartment and protects the filters from excessive temperature. It will shut down the furnace if it senses excessive temperatures.

Elevated temperatures at the control are normally caused by blower failure. The reason for the opening should be determined and repaired prior to resetting.

Manual Reset Flame Rollout Control (RS)

Located in the burner compartment at the top of the burner assembly, it senses high temperature that could occur if the heat exchanger tubes were plugged and the flame was rolling out instead of entering the tubes. It has a manual push-button reset that cannot be actuated until the limit control has cooled.

The reason for elevated temperatures at the control should be determined and repaired prior to resetting this manual reset control.

WARNING

To avoid property damage, personal injury or death due to fire or explosion, a qualified servicer must investigate the reason for the rollout protection device to open before manually resetting the rollout protection device.

Refrigeration System

The unit is equipped with a thermal expansion valve as a metering device.

Ensure the hold-down bolts on the compressor are secure and have not vibrated loose during shipment. Check that vibration grommets have been installed. Visually check all piping for damage and leaks; repair if necessary. The entire system has been factory charged and tested, making it unnecessary to field charge. Factory charges are shown on the unit's nameplate. To confirm charge levels or, if a leak occurs and charge needs to be added to the system, it is recommended to evacuate the system and recharge refrigerant to unit nameplate specifications. This unit has been rated in the cooling mode at the AHRI rated conditions of: Indoor (80°db / 67°wb) and outdoor (95°db). While operating at this condition, the subcooling should range from 12° to 15° F for each refrigeration circuit, for 15 and 20 ton models. Subcooling for 25 ton models should be from 16° to 19° F for circuit 1, and from 12° to 15° F for circuit 2.

Start-Up Procedure and Checklist

Begin with power turned off at all disconnects.

1. Turn thermostat system switch to "Cool," and fan switch to "Auto" and turn temperature setting as high as it will go.
2. Inspect all registers and set them to the normal open position.
3. Turn on the electrical supply at the disconnect.
4. Turn the fan switch to the "ON" position. The blower should operate in low speed after a 7 second delay.
5. Turn the fan switch to "Auto" position. The blower should stop after a 65 second delay.
6. Slowly lower the cooling temperature until first stage COOL (LOW COOL) starts. The blower, both fans, and first stage compressor should now be operating. The blower should be operating in low speed at 1175 motor rpm. Allow the unit to run 10 minutes, make sure cool air is being supplied by the unit.
7. Lower the cooling temperature further until second stage COOL (HIGH COOL) starts. The blower, both fans, and both compressors should now be operating. The blower should be operating in high speed at 1775 motor rpm. Allow the unit to run 10 minutes, make sure cool air is being supplied by the unit.
8. Turn the temperature setting to the highest position, stopping the unit. The indoor blower will continue to run for 65 seconds.
9. Turn the thermostat system switch to "OFF" and disconnect all power when servicing the unit.

LOW AMBIENT COOLING NOTES:

FOR 15 AND 20 TON MODELS: While in the Cooling Mode, to prevent frost from forming on the evaporator while the unit is operating in outdoor temperatures of 65°F or lower, it is recommended that a low ambient kit is used. This is strongly recommended for 2 Speed models due to the lower airflow while in the first stage of cooling. To further protect the compressor from damage during low ambient conditions, a Freezestat Kit (FSK01) can be added that turns the compressor off when the evaporator temperature drops too low.

FOR 25 TON MODELS: The 25 ton units are equipped with a control that shuts off one condenser fan when the outdoor temperature is 44° F or below. This is to assist low ambient cooling down to 24°. An optional Low Ambient kit, LAKT05, is required below 24° which will enable reliable cooling to occur to a minimum ambient temperature of zero °F.

WARNING

HIGH VOLTAGE!
Disconnect all power before servicing or installing this unit. Multiple power sources may be present. Failure to do so may cause property damage, personal injury or death.

NORMAL SEQUENCE OF OPERATION - COOLING

Refrigeration Sequence Check

With the disconnect switch open, remove the field connected thermostat wire from terminal R on TB1 terminal block. Place a jumper across terminals R and G, and across R and Y on TB1 terminal block. Close the disconnect switch. The following operational sequence should be observed.

1. Current through primary winding of transformer TRANS1 energizes the 24-volt control circuit.
2. To simulate a mechanical call for cooling from the wall thermostat, place a jumper across terminals R and Y1 of terminal block TB1.
3. **UNIT WITH ECONOMIZER OPTION:** The compressor circuit is interlocked through terminals 3 and 4 of the economizer module. If the outdoor air enthalpy (temperature and humidity) is not suitable for cooling, the economizer terminals will be closed permitting compressor to be energized.
4. The belt drive blower contactor closes its contacts L1, L2 and L3 to T1, T2 and T3 to provide power to the supply fan motor.
5. Check supply fan rotation. If the supply fan is rotating in the wrong direction, disconnect and lock off Single Point Power Block. Do not attempt to change load side wiring. Internal wiring is set at the factory to assure that the supply fan and compressors all rotate in the proper direction. Verification of correct supply fan rotation at initial startup will also indicate correct compressor rotation. Reconnect power and check for proper operation.
6. Compressor contactor closes its contacts L1, L2 and L3 to T1, T2 and T3 to provide power to the compressor motor COMP 1; COMP 2, if conditions are correct. In addition, contactor C1 closes its contact L3 to T3 , energizing the condenser fan motor.

WARNING

BURN HAZARD!
DO NOT TOUCH! DISCHARGE LINE MAY BE HOT!

7. Check that each compressor is operating correctly. The scroll compressors in these units MUST operate in the proper rotation. To ensure the compressors are operating in the correct direction, check the compressor discharge line pressure or temperature after each compressor is started.

   The discharge pressure and discharge line temperature should increase. If this does not occur and the compressor is producing an exceptional amount of noise, perform the following checks.
   - Ensure all compressors and the supply fan motor are operating in the proper direction. If a single motor is operating backwards, check the power wiring for that motor and correct any leads that have been interchanged at the contactor or at the motor.
   - If all of the motors are operating backward, disconnect the unit power supply and lock it in the "OFF" position. Switch two leads of the power supply at the unit Single Point Power Block. Reconnect power and check for compressor and supply fan motor operation.

8. With all safety devices closed, the system will continue cooling operation until the thermostat is satisfied.
9. Disconnecting the jumper wire between R and Y1 and Y2 and between R and G on TB1 terminal block will simulate a satisfied thermostat. The compressors will cycle off and IIC (pin 12) will initiate its time delay cycle. The compressor and the supply fan will cycle off.
10. After a time delay of approximately 3 minutes, the compressor control circuits will be ready to respond to a subsequent call for cooling from the wall thermostat.
11. Open disconnect switch. Reconnect the field thermostat wire at terminal R on terminal block TB1.

Final System Checks

1. Check to see if all supply and return air grilles are adjusted and the air distribution system is balanced for the best compromise between heating and cooling.
2. Check for air leaks in the ductwork. See Sections on **Air Flow Adjustments.**
3. Make sure the unit is free of "rattles", and the tubing in the unit is free from excessive vibration. Also make sure tubes or lines are not rubbing against each other or sheet metal surfaces or edges. If so, correct the trouble.
4. Set the thermostat at the appropriate setting for cooling and heating or automatic change over for normal use.
5. Be sure the Owner is instructed on the unit operation, filter, servicing, correct thermostat operation, etc.

MAINTENANCE

WARNING

HIGH VOLTAGE !

Disconnect all power before servicing or installing this unit. Multiple power sources may be present. Failure to do so may cause property damage, personal injury or death.

WARNING

To prevent personal injury or death due to improper installation, adjustment, alteration, service or maintenance, refer to this manual. For additional assistance or information, consult a qualified installer, service agency or the gas supplier.

CAUTION

This unit must be ISOLATED from the gas supply piping system by closing its individual manual shutoff valve during any pressure testing equal to or less than 1/2 PSIG.

Preventive maintenance is the best way to avoid unnecessary expense and inconvenience. Have this system inspected at regular intervals by qualified service personnel, at least twice a year. Routine maintenance should cover the following items:

1. Tighten all belts, set screws, and wire connections.
2. Clean evaporator and condenser coils mechanically or with cold water, if necessary. Usually any fouling is only matted on the entering air face of the coil and can be removed by brushing.
3. Lubricate motor bearings.
4. Align or replace belts as needed.
5. Replace filters as needed (see below).
6. Check for blockage of condensate drain.
7. Check power and control voltages.
8. Check running amperage.
9. Check operating temperatures and pressures.
10. Check and adjust temperature and pressure controls.
11. Check and adjust damper linkages.
12. Check operation of all safety controls.
13. Examine gas furnaces (see below and the User's Information Manual).
14. Check condenser fans and tighten set screws.

Filters

CAUTION

To prevent property damage due to fire and loss of equipment efficiency or equipment damage due to dust and lint build up on internal parts, never operate unit without an air filter installed in the return air system.

Every application may require a different frequency of replacement of dirty filters. Filters must be replaced at least every three (3) months during operating seasons.

Dirty filters are the most common cause of inadequate heating or cooling performance. Filter inspection should be made at least every two months; more often if necessary because of local conditions and usage.

Dirty throwaway filters should be discarded and replaced with a new, clean filter.

Disposable return air filters are supplied with this unit. See the unit Specification Sheet or Technical Manual for the correct size and part number. To remove the filters, remove the filter access panel on return side of the unit.

Cabinet Finish Maintenance

Use a fine grade automotive wax on the cabinet finish to maintain the finish's original high luster. This is especially important in installations with extended periods of direct sunlight.

Condenser and Induced Draft Motors

Bearings on the condenser fan motors and the combustion fan motor are permanently lubricated. No additional oiling is required.

Lubrication

The fan shaft bearings and the supply fan motor have grease fittings that should be lubricated during normal maintenance checks.

Clean Outside Coil (Qualified Servicer Only)

The coil with the outside air flowing over it should be inspected annually and cleaned as frequently as necessary to keep the finned areas free of lint, hair and debris.

Flame Sensor (Qualified Servicer Only)

A drop in the flame current can be caused by a nearly invisible coating on the flame sensor. This coating, created by the fuel or combustion air supply, can be removed by carefully cleaning the flame sensor with steel wool.

NOTE: After cleaning, the microamp signal should be stable and in the range of 4 - 6 microamps DC.

Flue Passages (Qualified Servicer Only)

At the start of each heating season, inspect and, if necessary, clean the unit flue passage.

Inspection & Cleaning

All flue product carrying areas of the furnace, its vent system, and main burners should be examined by a qualified service agency before the start of each heating season. This examination is necessary for continued safe operation. Particular attention should be given to deterioration from corrosion or other sources. This examination is accomplished in the following manner.

1. Disconnect power to the unit and remove furnace section access panel.
2. Remove burner assembly:
   a. Disconnect the three wires from the gas valve after noting which wires are connected to each terminal.
   b. Disconnect wires from the flame rod and ignition electrode.
   c. Disconnect the gas piping at the union.
   d. The entire burner assembly can now be removed from the unit.

NOTE: Use all screws that were removed; they are necessary for safe and proper operation of the unit.

3. Inspect and periodically clean the vent outlet (bird screen) on the access panel.

NOTE: Periodic observation of the flame and a log of CO_2 measurements are recommended. This will aid in determining whether the furnace is operating efficiently or if the furnace requires cleaning.

Flames should be stable, soft and blue (dust may cause orange tips but must not be yellow). The flames must extend directly outward from the burner without curling, floating or lifting off.

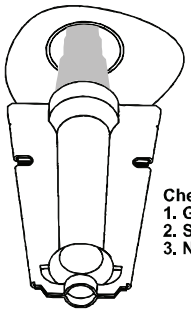

Check the burner flames for:
1. Good adjustment
2. Stable, soft and blue
3. Not curling, floating, or lifting off.

BURNER FLAME

WARNING

To avoid personal injury or death due to electric shock, do not remove any internal compartment covers or attempt any adjustment. Contact a qualified servicer at once if an abnormal flame should develop.

At least once a year, prior to or during the heating season, make a visual check of the burner flames.

NOTE: This will involve removing and reinstalling the heat exchanger door on the unit, which is held by two screws. If you are uncertain about your ability to do this, contact a qualified servicer.

If a strong wind is blowing, it may alter the airflow pattern within the unit enough that an inspection of the burner flames is not possible.

Functional Parts

Refer to the unit Parts Catalog for a list of functional parts. Parts are available from your distributor.

TROUBLESHOOTING

Ignition Control Error Codes

The following presents probable causes of questionable unit operation. Refer to *Diagnostic Indicator Chart* for an interpretation of the signal and to this section for an explanation.

Remove the control box access panel and note the number of diagnostic LED flashes. Refer to *Diagnostic Indicator Chart* for an interpretation of the signal and to this section for an explanation.

Internal Control Failure

If the integrated ignition control in this unit encounters an internal fault, it will go into a "hard" lockout and turn off the diagnostic LED. If diagnostic LED indicates an internal fault, check power supply to unit for proper voltage, check all fuses, circuit breakers and wiring. Disconnect electric power for five seconds. If LED remains off after restoring power, replace control.

Abnormal Operation - Heating Codes

External Lockout **(1 FLASH CODE)**

An external lockout occurs if the integrated ignition control determines that a measurable combustion cannot be established within three (3) consecutive ignition attempts. If flame is not established within the seven (7) second trial for ignition, the gas valve is deenergized, 15 second inter-purge cycle is completed, and ignition is reattempted. The control will repeat this routine three times if a measurable combustion is not established. The control will then shut off the induced draft blower and go into a lockout state.

If flame is established but lost, the control will energize the circulator blower at the heat speed and then begin a new ignition sequence. If flame is established then lost on subsequent attempts, the control will recycle for four (4) consecutive ignition attempts (five attempts total) before locking out.

The diagnostic fault code is 1 flash for a lockout due to failed ignition attempts or flame dropouts. The integrated control will automatically reset after one hour, or it can be reset by removing the thermostat signal or disconnecting the electrical power supply for over five seconds. If the diagnostic LED indicates an external lockout, perform the following checks:

- *Check the supply and manifold pressures*
- *Check the gas orifices for debris*
- *Check gas valve for proper operation*
- *Check secondary limit*

  A dirty filter, excessive duct static, insufficient air flow, a faulty limit, or a failed circulator blower can cause this limit to open. Check filters, total external duct static, circulator blower motor, blower motor speed tap (see wiring diagram), and limit. An interruption in electrical power during a heating cycle may also cause the auxiliary limit to open. The automatic reset secondary limit is located on top of the circulator blower assembly.
- *Check rollout limit*

  If the burner flames are not properly drawn into the heat exchanger, the flame rollout protection device will open. Possible causes are restricted or blocked flue passages, blocked or cracked heat exchanger, a failed induced draft blower, or insufficient combustion air. The rollout protection device is a manual reset limit located on the burner bracket. The cause of the flame rollout must be determined and corrected before resetting the limit.
- *Check flame sensor*

  A drop in flame signal can be caused by nearly invisible coating on the sensor. Remove the sensor and carefully clean with steel wool.
- *Check wiring*

  Check wiring for opens/shorts and miswiring.

IMPORTANT: If you have to frequently reset your gas/electric package unit, it means that a problem exists that should be corrected. Contact a qualified servicer for further information.

Pressure Switch Stuck Open **(2 FLASH CODE)**

A pressure switch stuck open can be caused by a faulty pressure switch, faulty wiring, a disconnected or damaged hose, a blocked or restricted flue, or a faulty induced draft blower.

If the control senses an open pressure switch during the pre-purge cycle, the induced draft blower only will be energized. If the pressure switch opens after ignition has begun the gas valve is deenergized, the circulator blower heat off cycle begins, and the induced draft blower remains on. The diagnostic fault code is two flashes.

Pressure Switch Stuck Closed **(3 FLASH CODE)**

A stuck closed pressure switch can be caused by a faulty pressure switch or faulty wiring. If the control encounters a pressure switch stuck closed, the induced draft blower remains off. The diagnostic LED code for this fault is three (3) flashes.

Open Thermal Protection Device **(4 FLASH CODE)**

If the primary limit switch opens, the gas valve is immediately deenergized, the induced draft and air circulating blowers are energized. The induced draft and air circulator blowers remain energized until the limit switch recloses. The diagnostic fault code for an open limit is four (4) flashes.

A primary limit will open due to excessive supply air temperatures. This can be caused by a dirty filter, excessive duct static, insufficient air flow, or a faulty limit. Check filters, total external duct static, blower motor, blower motor speed tap (see wiring diagram), and limit. This limit will automatically reset once the temperature falls below a preset level.

Flame Detected with Gas Valve Closed **(5 FLASH CODE)**

If flame is detected with the gas valve deenergized, the combustion and air circulator blowers are energized. The diagnostic fault code is five (5) flashes for this condition. The control can be reset by removing the power supply to the unit or it will automatically reset after one hour. Miswiring is the probable cause for this fault.

Abnormal Operation - Cooling Codes

Short Cycle Compressor Delay **(6 FLASH CODE)**

The automatic ignition control has a built-in feature that prevents damage to the compressor in short cycling situations. In the event of intermittent power losses or intermittent thermostat operation, the ignition control will delay output to the compressor contactor for three minutes from the time power is restored. (Compressor is off a total of three minutes). The diagnostic LED will flash six (6) times to indicate the compressor contactor output is being delayed.

NOTE: Some electronic thermostats also have a built-in compressor short cycle timer that may be longer than the three minute delay given above. If you are using an electronic thermostat and the compressor has not started after three minutes, wait an additional five minutes to allow the thermostat to complete its short cycle delay time.

⚠ CAUTION

To prevent unreliable operation or equipment damage, the gas manifold pressure must be as specified on the unit rating plate. Only minor adjustments should be made by adjusting the gas valve pressure regulator.

APPENDIX A BLOWER PERFORMANCE DATA
BELT DRIVE - STANDARD

DBG180 STANDARD TWO-SPEED BELT DRIVE

ESP, In H_2O	TURNS OPEN													
	0		1		2		3		4		5		6	
	CFM	BHP	CFM	BHP	CFM	BHP	CFM	BHP	CFM	BHP	CFM	BHP	CFM	BHP
0.2	---	---	---	---	---	---	---	0.00	6827	2.67	6394	2.28	5982	1.94
0.4	---	---	---	---	7079	3.20	6623	2.76	6161	2.34	5706	1.98	5271	1.66
0.6	---	---	6903	3.32	6405	2.83	5923	2.41	5434	2.02	4949	1.68	---	---
0.8	6717	3.42	6198	2.92	5668	2.45	5152	2.05	---	---	---	---	---	---
1.0	5975	2.99	5418	2.51	---	---	---	---	---	---	---	---	---	---
1.2	5147	2.55	---	---	---	---	---	---	---	---	---	---	---	---

DBG240 STANDARD TWO-SPEED BELT DRIVE

ESP, In H_2O	TURNS OPEN													
	0		1		2		3		4		5		6	
	CFM	BHP	CFM	BHP	CFM	BHP	CFM	BHP	CFM	BHP	CFM	BHP	CFM	BHP
0.2	---	---	---	---	9359	4.92	8991	3.79	8621	3.54	8188	3.27	7826	3.04
0.4	---	---	9018	3.18	8632	4.39	8251	3.39	7867	3.15	7363	2.85	6992	2.63
0.6	---	---	8279	2.96	7879	3.86	7484	2.99	7085	2.75	---	---	---	---
0.8	7957	4.82	7513	2.73	7097	3.35	---	---	---	---	---	---	---	---
1.0	7179	4.23	6716	2.49	---	---	---	---	---	---	---	---	---	---
1.2	6368	3.66	---	---	---	---	---	---	---	---	---	---	---	---

DBG300 STANDARD TWO SPEED BELT DRIVE

ESP, In H_2O	TURNS OPEN													
	0		1		2		3		4		5		6	
	CFM	BHP	CFM	BHP	CFM	BHP	CFM	BHP	CFM	BHP	CFM	BHP	CFM	BHP
0.2	9960	6.43	9464	5.80	8996	5.22	8553	4.67	8138	4.16	8005	4.00	7371	3.24
0.4	9324	6.07	8846	5.47	8396	4.91	7970	4.39	7570	3.90	7442	3.75	6831	3.02
0.6	8688	5.70	8229	5.13	7796	4.60	7386	4.10	7002	3.64	6879	3.49	---	---
0.8	8052	5.34	7612	4.80	7196	4.29	6803	3.81	---	---	---	---	---	---
1.0	7417	4.98	6994	4.46	6596	3.98	---	---	---	---	---	---	---	---
1.2	6781	4.62	---	---	---	---	---	---	---	---	---	---	---	---

NOTES:

High static airflow requires installation of high static kit.

Unit factory shipped with sheave set at 2.5 turns open.

Air flow tables represent dry coil with filters installed; SCFM correction factor for wet coil is 4%.

APPENDIX A BLOWER PERFORMANCE DATA

BELT DRIVE - HIGH STATIC

DBG180 HIGH STATIC DOWNSHOT TWO SPEED MODELS

(In. W.C.)	TURNS OPEN													
	0		1		2		3		4		5		6	
	CFM	BHP	CFM	BHP	CFM	BHP	CFM	BHP	CFM	BHP	CFM	BHP	CFM	BHP
0.8	---	---	---	---	---	---	---	---	6678	4.61	6266	4.10	---	---
1.0	---	---	---	---	---	---	6600	4.90	6126	4.32	5626	3.79	---	---
1.2	---	---	6840	5.80	6540	5.25	6078	4.58	5634	4.03	5115	3.51	---	---
1.4	6739	5.99	6457	5.53	6111	4.97	5633	4.31	5054	3.70	---	---	---	---
1.6	6367	5.77	6087	5.25	5670	4.67	5036	3.98	---	---	---	---	---	---
1.8	5950	5.47	5506	4.85	5010	4.28	---	---	---	---	---	---	---	---
2.0	5394	5.06	4868	4.49	---	---	---	---	---	---	---	---	---	---
2.2	4812	4.58	---	---	---	---	---	---	---	---	---	---	---	---

DBG240 HIGH STATIC BELT DRIVE DOWNSHOT TWO SPEED MODELS

(In. W.C.)	TURNS OPEN													
	0		1		2		3		4		5		6	
	CFM	BHP	CFM	BHP	CFM	BHP	CFM	BHP	CFM	BHP	CFM	BHP	CFM	BHP
0.8	---	---	---	---	---	---	8936	6.53	8347	5.76	7833	5.12	---	---
1.0	---	---	---	---	8855	7.06	8250	6.12	7657	5.40	7033	4.74	---	---
1.2	8934	7.89	8550	7.25	8175	6.57	7598	5.72	7043	5.04	6394	4.38	---	---
1.4	8424	7.49	8071	6.91	7639	6.21	7041	5.38	6318	4.63	---	---	---	---
1.6	7959	7.21	7609	6.57	7088	5.84	6295	4.97	---	---	---	---	---	---
1.8	7438	6.84	6883	6.06	6263	5.36	---	---	---	---	---	---	---	---
2.0	6742	6.32	6085	5.61	---	---	---	---	---	---	---	---	---	---
2.2	6015	5.73	---	---	---	---	---	---	---	---	---	---	---	---

DBG300 HIGH STATIC TWO-SPEED BELT DRIVE

ESP, In H_2O	TURNS OPEN													
	0		1		2		3		4		5		6	
	CFM	BHP	CFM	BHP	CFM	BHP	CFM	BHP	CFM	BHP	CFM	BHP	CFM	BHP
0.4	---	---	---	---	---	---	---	---	---	---	9854	6.74	9259	5.99
0.6	---	---	---	---	---	---	---	---	9812	7.13	9197	6.35	8626	5.63
0.8	---	---	---	---	---	---	9771	7.52	9131	6.70	8541	5.95	7993	5.27
1.0	---	---	---	---	---	---	9063	7.05	8450	6.27	7885	5.56	7359	4.91
1.2	---	---	---	---	8990	7.39	8355	6.58	7769	5.84	7228	5.17	6726	4.55
1.4	---	---	8968	7.80	8253	6.88	7647	6.11	7088	5.41	6572	4.77	---	---
1.6	---	---	8197	7.23	7516	6.37	6939	5.64	---	---	---	---	---	---
1.8	8136	7.58	7426	6.67	6779	5.85	---	---	---	---	---	---	---	---
2.0	7327	6.97	6654	6.11	---	---	---	---	---	---	---	---	---	---
2.2	6518	6.35	---	---	---	---	---	---						

NOTES:

High static airflow requires installation of high static kit.

Unit factory shipped with sheave set at 2.5 turns open.

Air flow tables represent dry coil with filters installed; SCFM correction factor for wet coil is 4%.

APPENDIX A ECONOMIZER PRESSURE DROP

Airflow Pressure Drop of Downflow Economizer for 15 to 25 Ton Rooftop Units (100% Return Air)												
SCFM	4500	5000	5500	6000	6500	7000	7500	8000	8500	9000	9500	10000
(In WG)	0.15	0.18	0.22	0.27	0.32	0.37	0.42	0.48	0.55	0.61	0.69	0.76

APPENDIX B ELECTRICAL DATA

Model Number	Electrical Rating	Compressor Circuit 1		Compressor Circuit 2		Outdoor Fan Motor			Indoor Fan Motor			Optional Powered Convienience Outlet	Power Supply	
		RLA	LRA	RLA	LRA	QTY	HP	FLA	Type	HP	FLA	FLA	MCA	MOP
DCG1803W	208/230-3-60	25.0	164.0	25.0	164.0	3	0.33	2.0	2-Speed High Static Belt Drive	7.50	20.3	-	82.6 / 82.6	100 / 100
												7.2 / 6.5	89.8 / 89.1	110 / 110
DCG1803V	208/230-3-60	25.0	164.0	25.0	164.0	3	0.33	2.0	2-Speed Belt Drive	5.00	14.0	-	76.3 / 76.3	100 / 100
												7.2 / 6.5	83.5 / 82.8	100 / 100
DCG1804W	460-3-60	12.2	100.0	12.2	100.0	3	0.33	0.9	2-Speed High Static Belt Drive	7.50	9.5	-	39.5	50
												3.3	42.8	50
DCG1804V	460-3-60	12.2	100.0	12.2	100.0	3	0.33	0.90	2-Speed Belt Drive	5.00	6.6	-	36.6	45
												3.3	39.9	50
DCG1807W	575-3-60	9.0	78.0	9.0	78.0	3	0.33	0.7	2-Speed High Static Belt Drive	7.50	7.5	-	29.8	35
												2.6	32.4	40
DCG1807V	575-3-60	9.0	78.0	9.0	78.0	3	0.33	0.7	2-Speed Belt Drive	5.00	5.2	-	27.5	35
												2.6	30.1	35

Model Number	Electrical Rating	Compressor Circuit 1		Compressor Circuit 2		Outdoor Fan Motor			Indoor Fan Motor			Optional Powered Convienience Outlet	Power Supply	
		RLA	LRA	RLA	LRA	QTY	HP	FLA	Type	HP	FLA	FLA	MCA	MOP
DCG2403W	208/230-3-60	34.0	240.0	34.0	240.0	3	0.33	2.0	2-speed High Static Belt Drive	7.50	20.3	-	103 / 103	125 / 125
												7.2 / 6.5	110 / 109	125 / 125
DCG2403V	208/230-3-60	34.0	240.0	34.0	240.0	3	0.33	2.0	2-speed Belt Drive	5.00	14.0	-	96.4 / 96.4	125 / 125
												7.2 / 6.5	104 / 103	125 / 125
DCG2404W	460-3-60	16.0	140.0	16.0	140.0	3	0.33	0.9	2-speed High Static Belt Drive	7.50	9.5	-	48.1	60
												3.3	51.4	60
DCG2404V	460-3-60	16.0	140.0	16.0	140.0	3	0.33	0.9	2-speed Belt Drive	5.00	6.6	-	45.2	60
												3.3	48.5	60
DCG2407W	575-3-60	12.9	107.6	12.9	107.6	3	0.33	0.7	2-speed High Static Belt Drive	7.50	7.5	-	38.7	50
												2.6	41.3	50
DCG2407V	575-3-60	12.9	107.6	12.9	107.6	3	0.33	0.7	2-speed Belt Drive	5.00	5.2	-	36.4	45
												2.6	39.0	50

Model Number	Electrical Rating	Compressor Circuit 1		Compressor Circuit 2		Outdoor Fan Motor			Indoor Fan Motor			Optional Powered Convienience Outlet	Power Supply	
		RLA	LRA	RLA	LRA	QTY	HP	FLA	Type	HP	FLA	FLA	MCA	MOP
DCG3003W	208/230-3-60	48.1	245.0	48.1	245.0	2	1.00	4.2	2-speed High Static Belt Drive	7.50	21.0	-	138 / 138	175 / 175
												7.2 / 6.5	145 / 144	175 / 175
DCG3003V	208/230-3-60	48.1	245.0	48.1	245.0	2	1.00	4.2	2-speed Belt Drive	7.50	21.0	-	138 / 138	175 / 175
												7.2 / 6.5	145 / 144	175 / 175
DCG3004W	460-3-60	18.6	125.0	18.6	125.0	2	1.00	2.1	2-speed High Static Belt Drive	7.50	10.1	-	56.1	70
												3.3	59.4	70
DCG3004V	460-3-60	18.6	125.0	18.6	125.0	2	1.00	2.1	2-speed Belt Drive	7.50	10.1	-	56.1	70
												3.3	59.4	70
DCG3007W	575-3-60	14.7	100.0	14.7	100.0	2	1.00	1.6	2-speed High Static Belt Drive	7.50	8.2	-	44.6	50
												2.6	47.2	60
DCG3007V	575-3-60	14.7	100.0	14.7	100.0	2	1.00	1.6	2-speed Belt Drive	7.50	8.2	-	44.6	50
												2.6	47.2	60

APPENDIX C UNIT DIMENSIONS

Model	A	B	C	D
15 Ton **20 Ton**	133-1/2"	88-7/32"	50-9/32"	5-5/32"
25 Ton	133-1/2"	88-7/32"	53-9/32"	5-5/32"

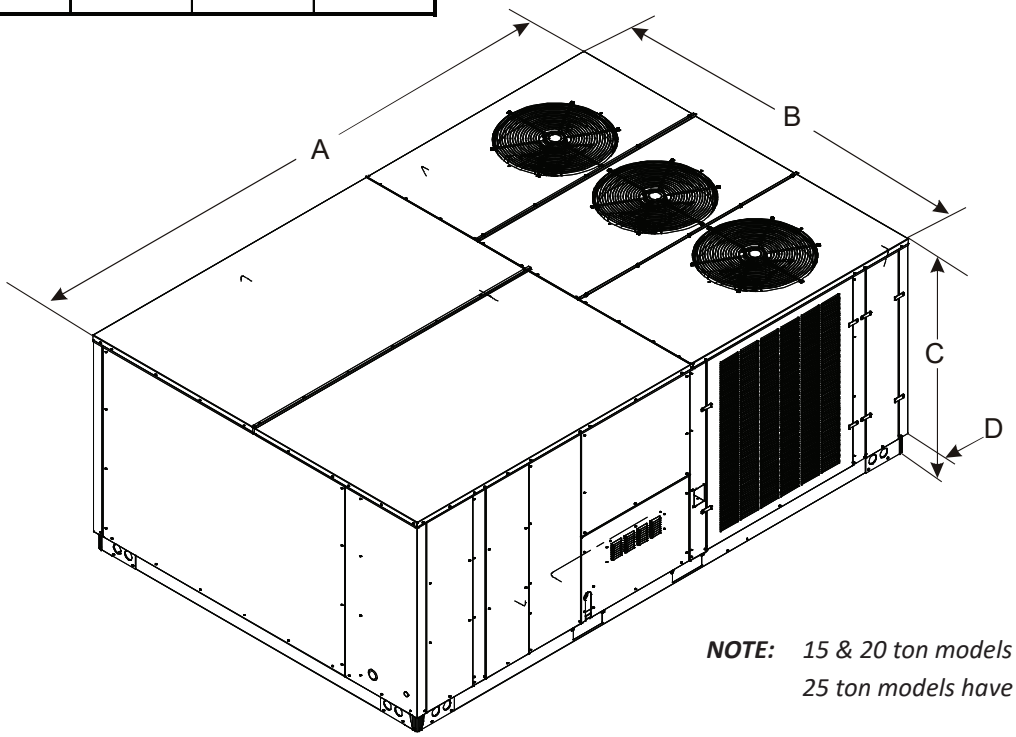

NOTE: *15 & 20 ton models have 3 fans.*
25 ton models have 2 fans.

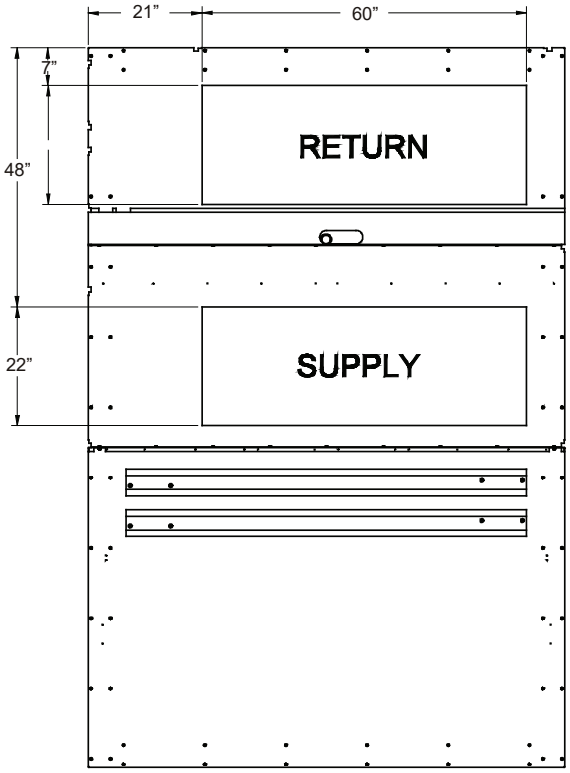

VERTICAL DISCHARGE (TOP VIEW)

APPENDIX D WIRING DIAGRAMS

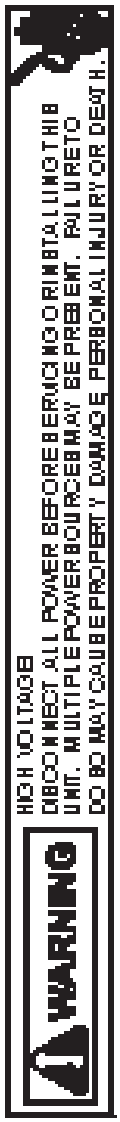

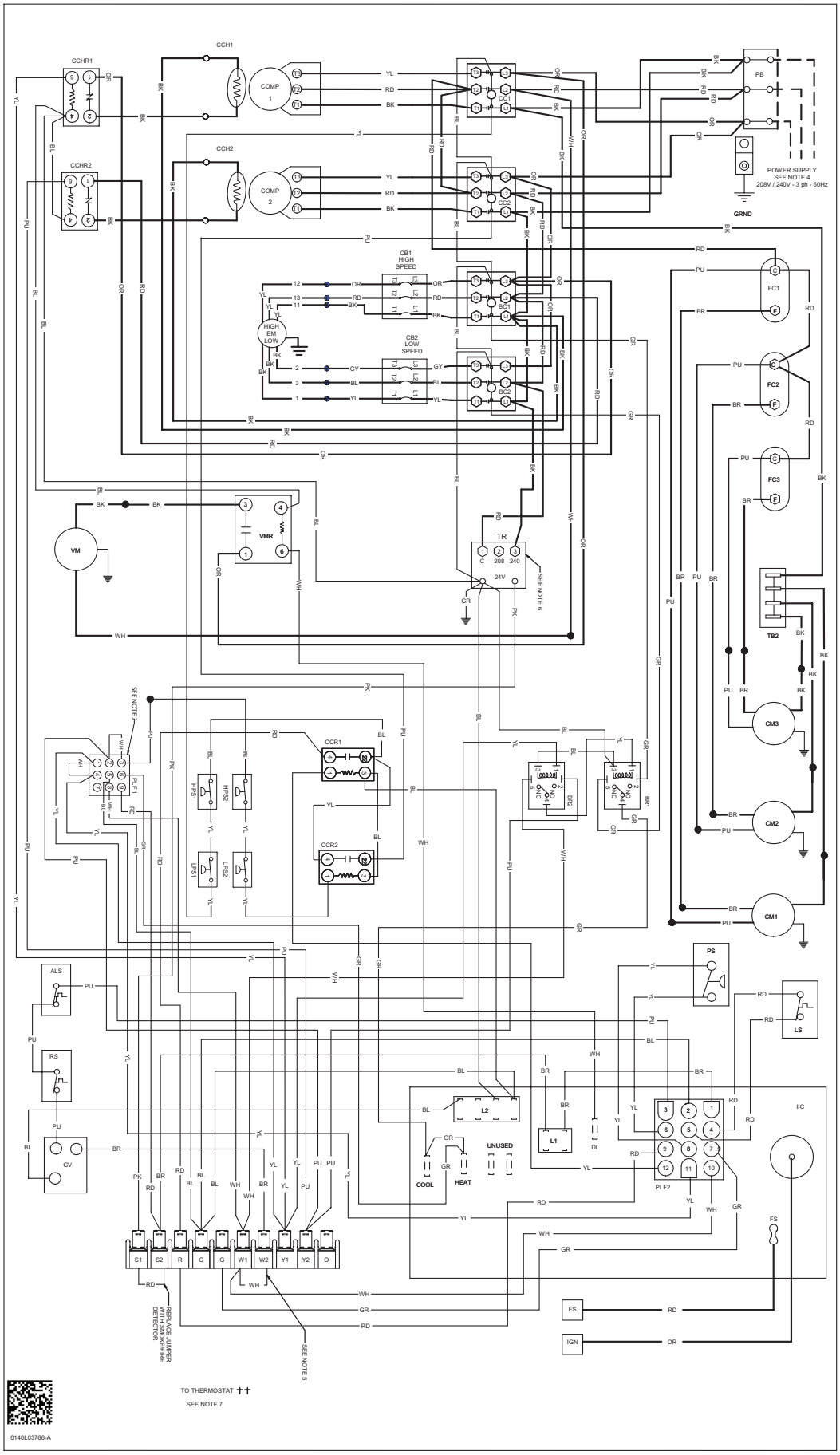

Wiring is subject to change. Always refer to the wiring diagram on the unit for the most up-to-date wiring.

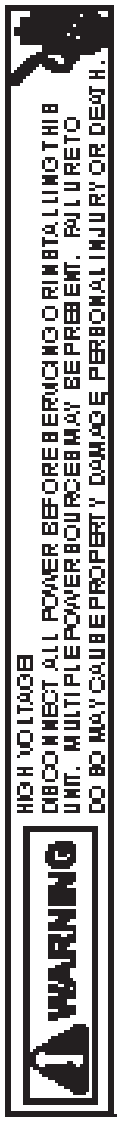

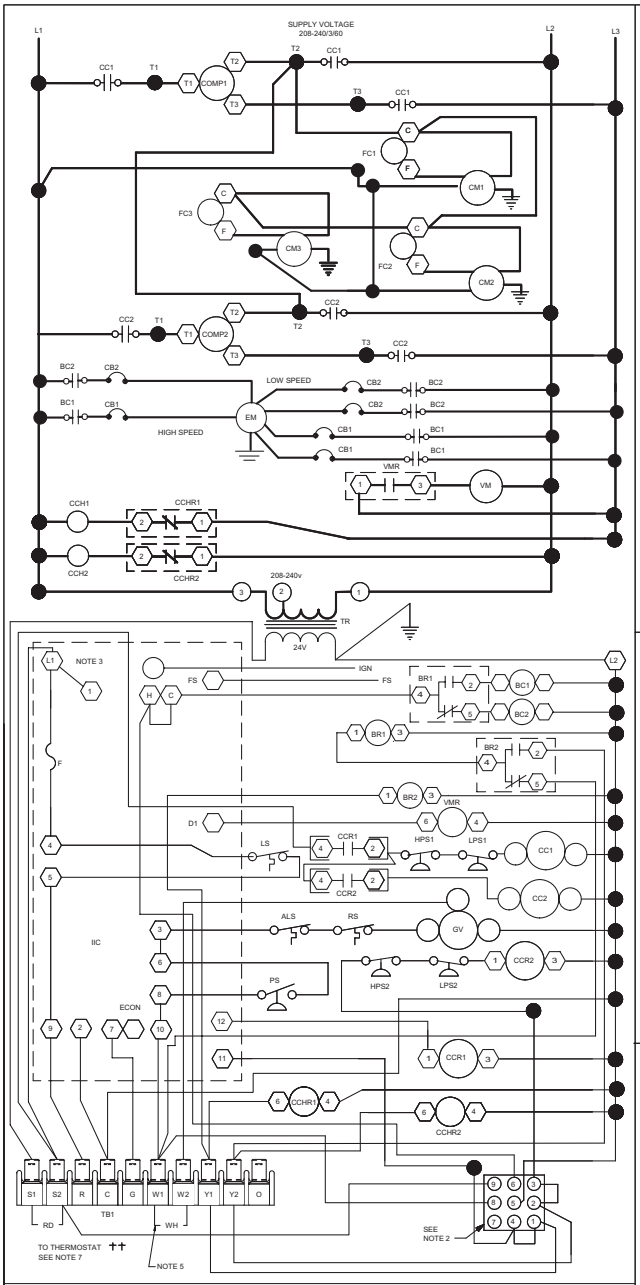

COMPONENT LEGEND

ALS	AUXILLARY LIMIT SWITCH
BC	BLOWER CONTACTOR
BR	BLOWER RELAY
CB	CIRCUIT BREAKER
COMP	COMPRESSOR
CM	CONDENSER MOTOR
CC	COMPRESSOR CONTACTOR
CCH	CRANK CASE HEATER
CCHR	CRANK CASE HEATER RELAY
CCR	COMPRESSOR CONTACTOR RELAY
EM	EVAPORATOR MOTOR
F	FUSE
FC	FAN CAPACITOR
FS	FLAME SENSOR
GND	EQUIPMENT GROUND
GV	GAS VALVE
HPS	HIGH PRESSURE SWITCH
IBR	INDOOR BLOWER RELAY
IIC	INTEGRATED IGNITION CONTROL
IGN	IGNITOR
LPS	LOW PRESSURE SWITCH
LS	LIMIT SWITCH
PB	POWER DISTRUBTION BLOCK
PLF	FEMALE PLUG/CONNECTOR
PS	PRESSURE SWITCH
RS	ROLLOUT SWITCH
TB1	TERMINAL BLOCK (24V SIGNAL)
TB2	TERMINAL BLOCK (L1)
TR	TRANSFORMER
VM	VENT MOTOR
VMR	VENT MOTOR RELAY

NOTES

1. REPLACEMENT WIRE MUST BE THE SAME SIZE AND TYPE OF INSULATION AS ORIGINAL. (USE COPPER CONDUCTOR ONLY).
2. ACCESSORY ECONOMIZER PLUG ADJACENT TO BLOWER HOUSING IN RETURN AIR COMPARTMENT. REMOVE MALE PLUG AND ATTACH FEMALE PLUG TO THE ECONOMIZER ACCESSORY.
3. L1 AND L2 ON IIC CONTROL IS 24V INPUT.
4. USE COPPER CONDUCTORS ONLY.

++ USE NEC CLASS 2 WIRE.

5. FOR TWO STAGE OPERATION REMOVE W1 TO W2 WIRE JUMPER.
6. FOR 208V OPERATION MOVE BLACK WIRE FROM TERMINAL 3 TO TERMINAL 2 ON THE TRANSFORMER.

FACTORY WIRING

LINE VOLTAGE
LOW VOLTAGE
OPTIONAL HIGH VOLTAGE

FIELD WIRING

HIGH VOLTAGE
LOW VOLTAGE

WIRE CODE

BK	BLACK
BL	BLUE
BR	BROWN
GR	GREEN
OR	ORANGE
PK	PINK
PU	PURPLE
RD	RED
WH	WHITE
YL	YELLOW
YL/PK	YELLOW WITH PINK STRIP
BL/PK	BLUE WITH PINK STRIP

THERMOSTAT
FIELD WIRING ++

2 STAGE COOLING

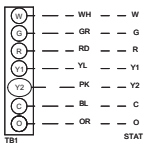

INSTALLER/SERVICEMAN

THE STATUS LIGHT ON THE FURNACE CONTROL MAY BE USED AS A GUIDE TO TROUBLESHOOTING THIS APPLIANCE. STATUS LIGHT CODES ARE AS FOLLOWS:

STATUS LIGHT	EQUIPMENT STATUS	CHECK
ON	NORMAL OPERATION	------
OFF	NO POWER OR INTERNAL CONTROL	CHECK INPUT POWER CHECK FUSE ON CONTROL REPLACE CONTROL
1 BLINK	IGNITION FAILURE OPEN ROLLOUT SWITCH OPEN AUX. LIMIT SWITCH	GAS FLOW GAS PRESSURE GAS VALVE FLAME SENSOR FLAME ROLLOUT BAD SWITCH AUX. LIMIT OPEN
2 BLINKS	PRESSURE SWITCH OPEN	CHECK PRESSURE SWITCH
3 BLINKS	PRESSURE SWITCH CLOSED WITHOUT INDUCER ON	CHECK PRESSURE SWITCH
4 BLINKS	OPEN LIMIT SWITCH	MAIN LIMIT OPEN BAD SWITCH
5 BLINKS	FALSE FLAME SENSED	STICKING GAS VALVE
6 BLINKS	COMPRESSOR OUTPUT DELAY	3 MIN. COMP. ANTI-CYCLE TIMER

SEE UNIT RATING PLATE FOR TYPE AND SIZE OF OVER CURRENT PROTECTION

0140L03767-A

Wiring is subject to change. Always refer to the wiring diagram on the unit for the most up-to-date wiring.

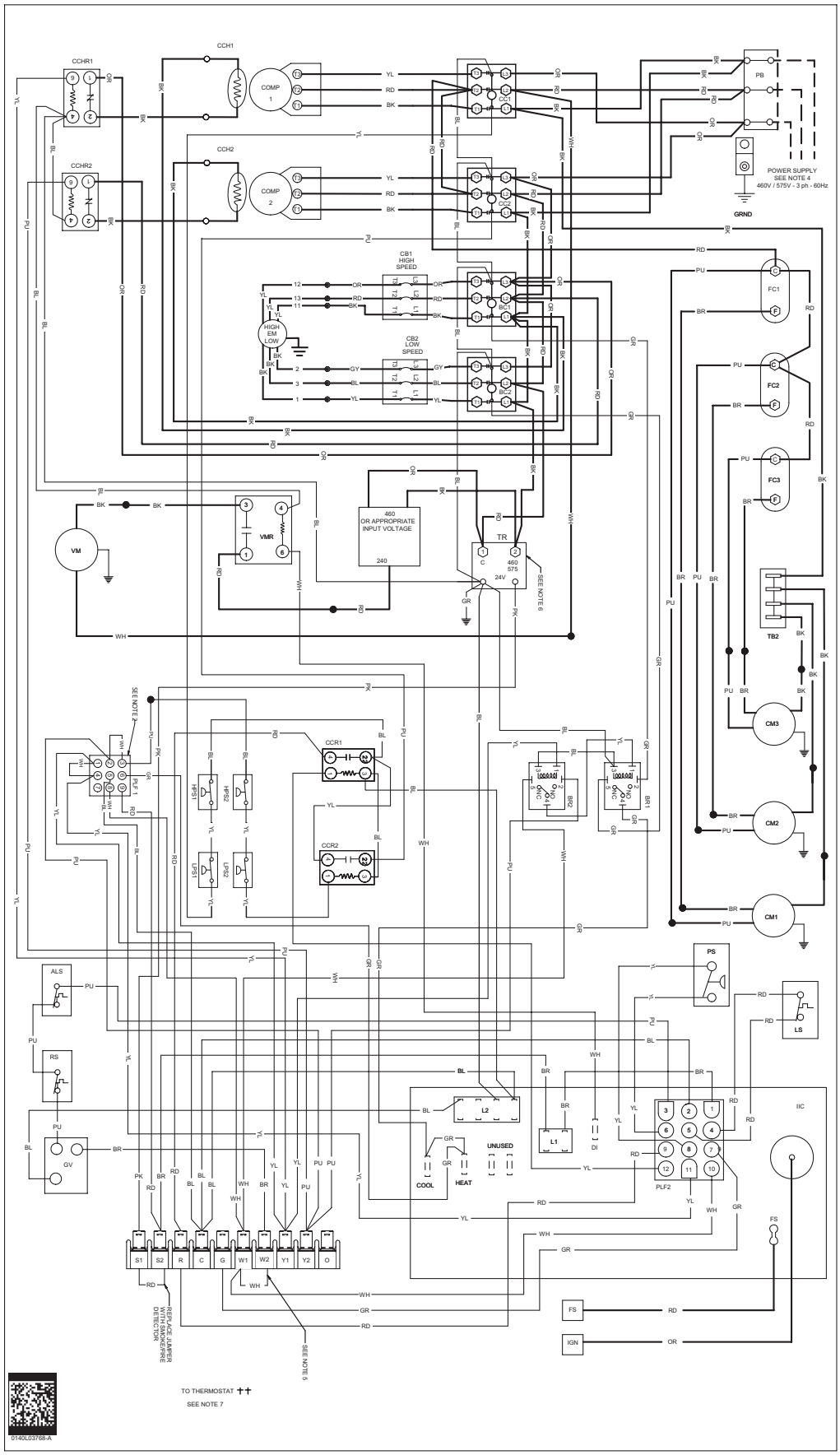

Wiring is subject to change. Always refer to the wiring diagram on the unit for the most up-to-date wiring.

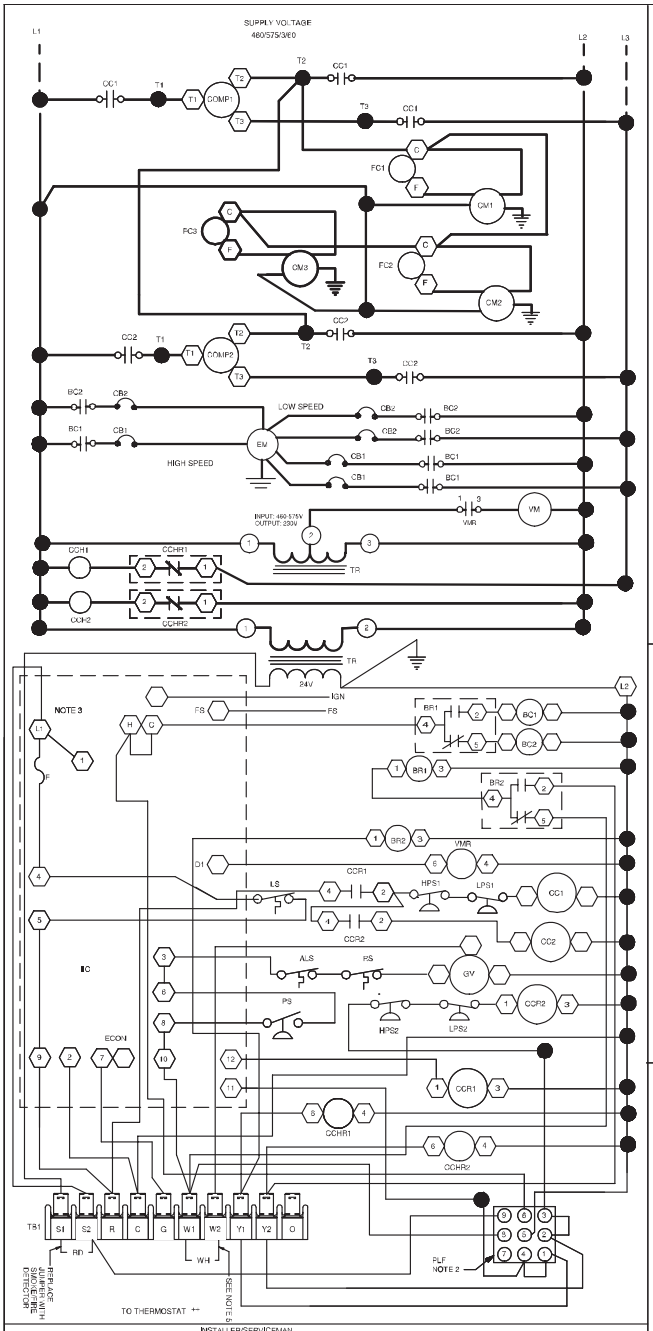

INSTALLER/SERVICEMAN

THE STATUS LIGHT ON THE FURNACE CONTROL MAY BE USED AS A GUIDE TO TROUBLESHOOTING THIS APPLIANCE. STATUS LIGHT CODES ARE AS FOLLOWS:

STATUS LIGHT	EQUIPMENT STATUS	CHECK
ON	NORMAL OPERATION	— —
OFF	NO POWER OR INTERNAL CONTROL	CHECK INPUT POWER CHECK FUSE ON CONTROL REPLACE CONTROL
1 BLINK	IGNITION FAILURE OPEN ROLLOUT SWITCH OPEN AUX. LIMIT SWITCH	GAS FLOW GAS PRESSURE GAS VALVE FLAME SENSOR FLAME ROLLOUT BAD SWITCH AUX. LIMIT OPEN
2 BLINKS	PRESSURE SWITCH OPEN	CHECK PRESSURE SWITCH
3 BLINKS	PRESSURE SWITCH CLOSED WITHOUT INDUCER ON	CHECK PRESSURE SWITCH
4 BLINKS	OPEN LIMIT SWITCH	MAIN LIMIT OPEN BAD SWITCH
5 BLINKS	FALSE FLAME SENSED	STICKING GAS VALVE
6 BLINKS	COMPRESSOR OUTPUT DELAY	3 MIN. COMP. ANTI-CYCLE TIMER

SEE UNIT RATING PLATE FOR TYPE AND SIZE OF OVER CURRENT PROTECTION

COMPONENT LEGEND

ALS	AUXILLARY LIMIT SWITCH
BC	BLOWER CONTACTOR
BR	BLOWER RELAY
COMP	COMPRESSOR
CM	CONDENSER MOTOR
CC	COMPRESSOR CONTACTOR
CCH	CRANK CASE HEATER
CCHR	CRANK CASE HEATER RELAY
CCR	COMPRESSOR CONTACTOR RELAY
EM	EVAPORATOR MOTOR
F	FUSE
FC	FAN CAPACITOR
FS	FLAME SENSOR
GND	EQUIPMENT GROUND
GV	GAS VALVE
HPS	HIGH PRESSURE SWITCH
IBR	INDOOR BLOWER RELAY
IIC	INTEGRATED IGNITION CONTROL
IGN	IGNITOR
LPS	LOW PRESSURE SWITCH
LS	LIMIT SWITCH
PLF	FEMALE PLUG/CONNECTOR
PS	PRESSURE SWITCH
RS	ROLLOUT SWITCH
TB1	TERMINAL BLOCK (24V SIGNAL)
TB2	TERMINAL BLOCK (L1)
TR	TRANSFORMER
VM	VENT MOTOR
VMR	VENT MOTOR RELAY

NOTES

1. REPLACEMENT WIRE MUST BE THE SAME SIZE AND TYPE OF INSULATION AS ORIGINAL. (USE COPPER CONDUCTOR ONLY).
2. ACCESSORY ECONOMIZER PLUG ADJACENT TO BLOWER HOUSING IN RETURN AIR COMPARTMENT. REMOVE MALE PLUG AND ATTACH FEMALE PLUG TO THE ECONOMIZER ACCESSORY.
3. L1 AND L2 ON IIC CONTROL IS 24V INPUT.
4. USE COPPER CONDUCTORS ONLY.

++ USE NEC CLASS 2 WIRE.

5. FOR TWO STAGE OPERATION REMOVE W1 TO W2 WIRE JUMPER.

FACTORY WIRING

LINE VOLTAGE

LOW VOLTAGE

FIELD WIRING

HIGH VOLTAGE

WIRE CODE

BK	BLACK
BL	BLUE
BR	BROWN
GR	GREEN
OR	ORANGE
PK	PINK
PU	PURPLE
RD	RED
WH	WHITE
YL	YELLOW
YL/PK	YELLOW WITH PINK STRIP
BL/PK	BLUE WITH PINK STRIP

THERMOSTAT FIELD WIRING ++

2 STAGE COOLING

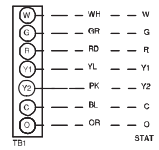

NO ECONOMIZER

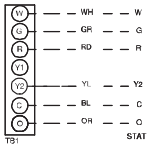

WITH ECONOMIZER OPTION

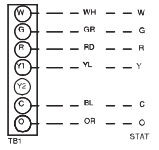

0140-03769-B

Wiring is subject to change. Always refer to the wiring diagram on the unit for the most up-to-date wiring.

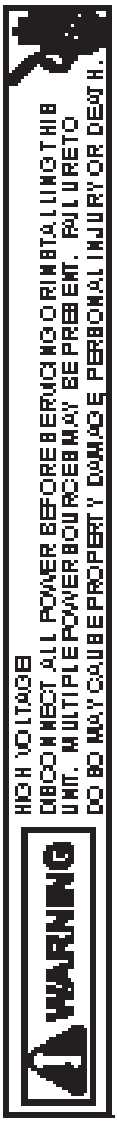

POWER DIAGRAM

IIC DIAGNOSTIC BLINK CODES

STATUS LIGHT	EQUIPMENT STATUS	CHECK
ON	NORMAL OPERATION	———
OFF	NO POWER OR INTERNAL CONTROL	CHECK INPUT POWER CHECK FUSE ON CONTROL REPLACE CONTROL
1 BLINK	IGNITION FAILURE OPEN ROLLOUT SWITCH OPEN AUX LIMIT SWITCH	GAS FLOW GAS PRESSURE GAS VALVE FLAME SENSER FLAME ROLLOUT BAD SWITCH AUX.LIMIT OPEN
2 BLINKS	PRESSURE SWITCH OPEN	CHECK PRESSURE SWITCH
3 BLINKS	PRESSURE SWITCH CLOSED WITHOUT INDUCER ON	CHECK PRESSURE SWITCH
4 BLINKS	OPEN LIMIT SWITCH	MAIN LIMIT OPEN BAD SWITCH
5 BLINKS	FALSE FLAME SENSED	STICKING GAS VALVE
6 BLINKS	COMPRESSOR OUTPUT DELAY	3 MIN. COMP. ANTI-CYCLE TIMER

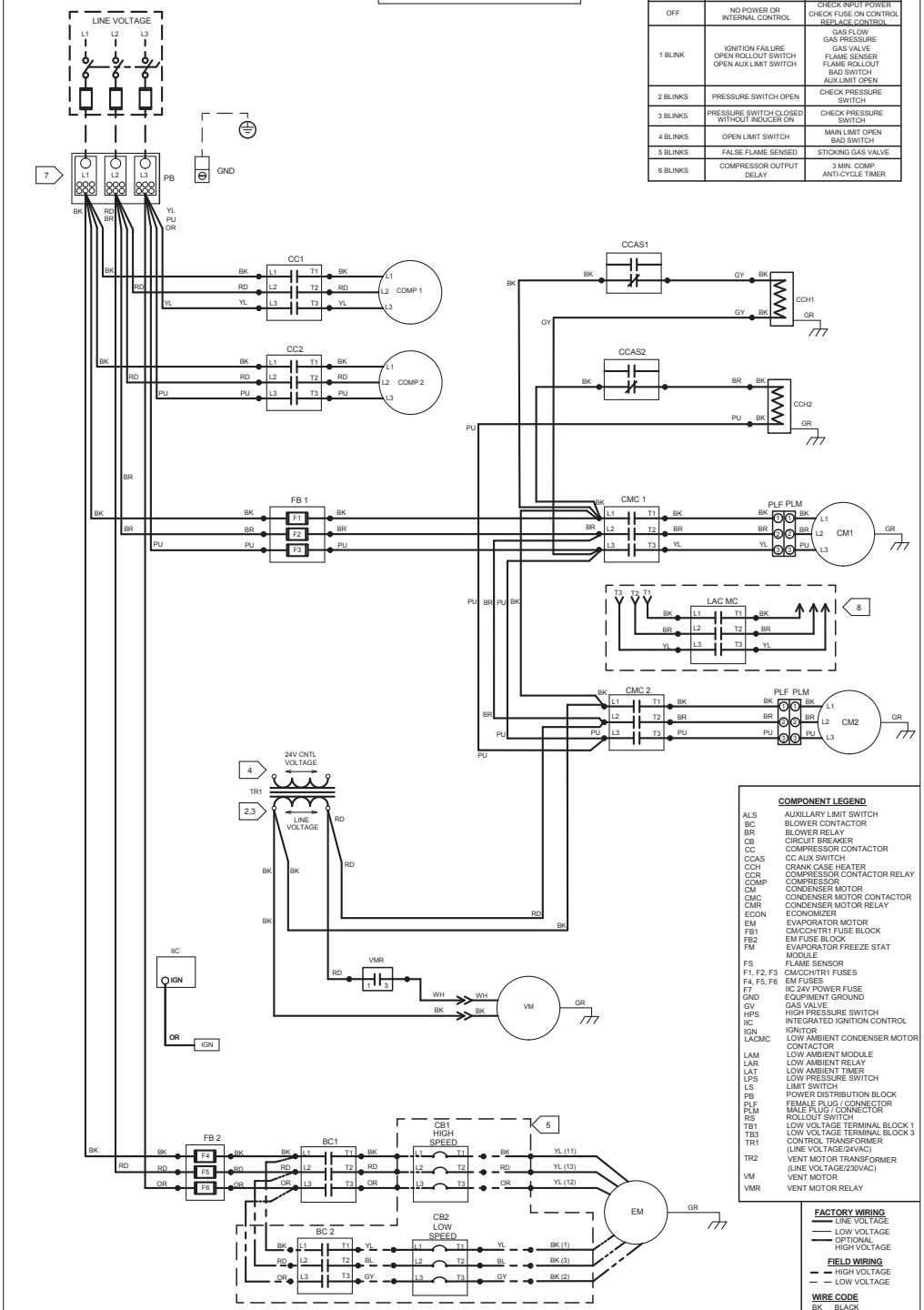

COMPONENT LEGEND

ALS	AUXILLARY LIMIT SWITCH
BC	BLOWER CONTACTOR
BR	BLOWER RELAY
CB	CIRCUIT BREAKER
CC	COMPRESSOR CONTACTOR
CCAS	CC AUX SWITCH
CCH	CRANK CASE HEATER
CCR	COMPRESSOR CONTACTOR RELAY
COMP	COMPRESSOR
CM	CONDENSER MOTOR
CMC	CONDENSER MOTOR CONTACTOR
CMR	CONDENSER MOTOR RELAY
ECON	ECONOMIZER
EM	EVAPORATOR MOTOR
FB1	CM/CCH/TR1 FUSE BLOCK
FB2	EM FUSE BLOCK
FM	EVAPORATOR FREEZE STAT MODULE
FS	FLAME SENSOR
F1, F2, F3	CM/CCH/TR1 FUSES
F4, F5, F6	EM FUSES
F7	IIC 24V POWER FUSE
GND	EQUIPMENT GROUND
GV	GAS VALVE
HPS	HIGH PRESSURE SWITCH
IIC	INTEGRATED IGNITION CONTROL
IGN	IGNITOR
LACMC	LOW AMBIENT CONDENSER MOTOR CONTACTOR
LAM	LOW AMBIENT MODULE
LAR	LOW AMBIENT RELAY
LAT	LOW AMBIENT TIMER
LPS	LOW PRESSURE SWITCH
LS	LIMIT SWITCH
PB	POWER DISTRIBUTION BLOCK
PLF	FEMALE PLUG / CONNECTOR
PLM	MALE PLUG / CONNECTOR
RS	ROLLOUT SWITCH
TB1	LOW VOLTAGE TERMINAL BLOCK 1
TB3	LOW VOLTAGE TERMINAL BLOCK 3
TR1	CONTROL TRANSFORMER (LINE VOLTAGE/24VAC)
TR2	VENT MOTOR TRANSFORMER (LINE VOLTAGE/230VAC)
VM	VENT MOTOR
VMR	VENT MOTOR RELAY

FACTORY WIRING
- LINE VOLTAGE
- LOW VOLTAGE
- OPTIONAL HIGH VOLTAGE

FIELD WIRING
- HIGH VOLTAGE
- LOW VOLTAGE

WIRE CODE

BK	BLACK
BL	BLUE
BR	BROWN
GR	GREEN
GY	GRAY
OR	ORANGE
PK	PINK
PU	PURPLE
RD	RED
WH	WHITE
YL	YELLOW

NOTES:
1. REPLACEMENT WIRE MUST BE SAME SIZE AND TYPE OF INSULATION AS ORIGINAL (USE COPPER CONDUCTORS ONLY).
2. THE CONTROL TRANSFORMER HAS MULTIPLE HIGH VOLTAGE TAPS. ENSURE WIRE CONNECTIONS ARE CORRECT FOR UNIT SUPPLY VOLTAGE RATING
3. 208/230V SUPPLY POWER UNITS ARE FACTORY CONNECTED TO THE CONTROL TRANSFORMER 240V TAP. MOVE WIRE CONNECTION FROM 240V TAP TO 208V TAP WHEN 208V POWER SUPPLY IS USED.
4. SEE CONTROL DIAGRAM FOR CONTROL TRANSFORMER LOW VOLTAGE CONNECTIONS
5. OPTIONAL; CB1,CB2,BC2 AND ASSOCIATED WIRING IS PRESENT ONLY WITH 2-SPEED EVAPORATOR MOTOR.
6. USE COPPER CONDUCTORS ONLY. UNIT TERMINALS ARE NOT DESIGNED FOR OTHER CONDUCTORS. THE USE OF OTHER TYPE CONDUCTORS MAY CAUSE DAMAGE TO THE UNIT.
7. SEE ACCESSORY KIT LITERATURE FOR OPTIONAL CONVENIENCE OUTLET WIRING DIAGRAM.
8. IF LOW AMBIENT KIT INSTALLED, DISCONNECT CONDENSER MOTOR WIRES (BK,BR,YL) FROM CMC1 (T1,T2,T3) AND CONNECT TO CORRESPONDING BK,BR,YL WIRES ON LOW AMBIENT HARNESS (INSULATED MALE QUICK CONNECT). ALSO CONNECT LOW AMBIENT HARNESS WIRES (BK,BR,YL) (INSULATED FEMALE QUICK CONNECT) TO T1,T2,T3 ON CMC1.

0140L04897-B

Wiring is subject to change. Always refer to the wiring diagram on the unit for the most up-to-date wiring.

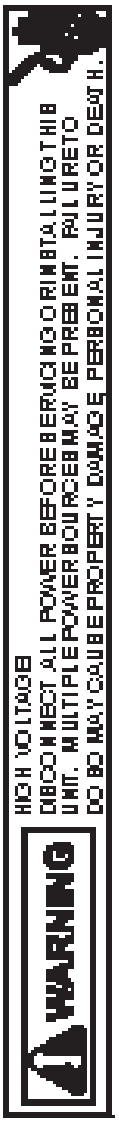

POWER DIAGRAM

IIC DIAGNOSTIC BLINK CODES

STATUS LIGHT	EQUIPMENT STATUS	CHECK
ON	NORMAL OPERATION	--------
OFF	NO POWER OR INTERNAL CONTROL	CHECK INPUT POWER CHECK FUSE ON CONTROL REPLACE CONTROL
1 BLINK	IGNITION FAILURE OPEN ROLLOUT SWITCH OPEN AUX LIMIT SWITCH	GAS FLOW GAS PRESSURE GAS VALVE FLAME SENSER FLAME ROLLOUT BAD SWITCH AUX.LIMIT OPEN
2 BLINKS	PRESSURE SWITCH OPEN	CHECK PRESSURE SWITCH
3 BLINKS	PRESSURE SWITCH CLOSED WITHOUT INDUCER ON	CHECK PRESSURE SWITCH
4 BLINKS	OPEN LIMIT SWITCH	MAIN LIMIT OPEN BAD SWITCH
5 BLINKS	FALSE FLAME SENSED	STICKING GAS VALVE
6 BLINKS	COMPRESSOR OUTPUT DELAY	3 MIN. COMP. ANTI-CYCLE TIMER

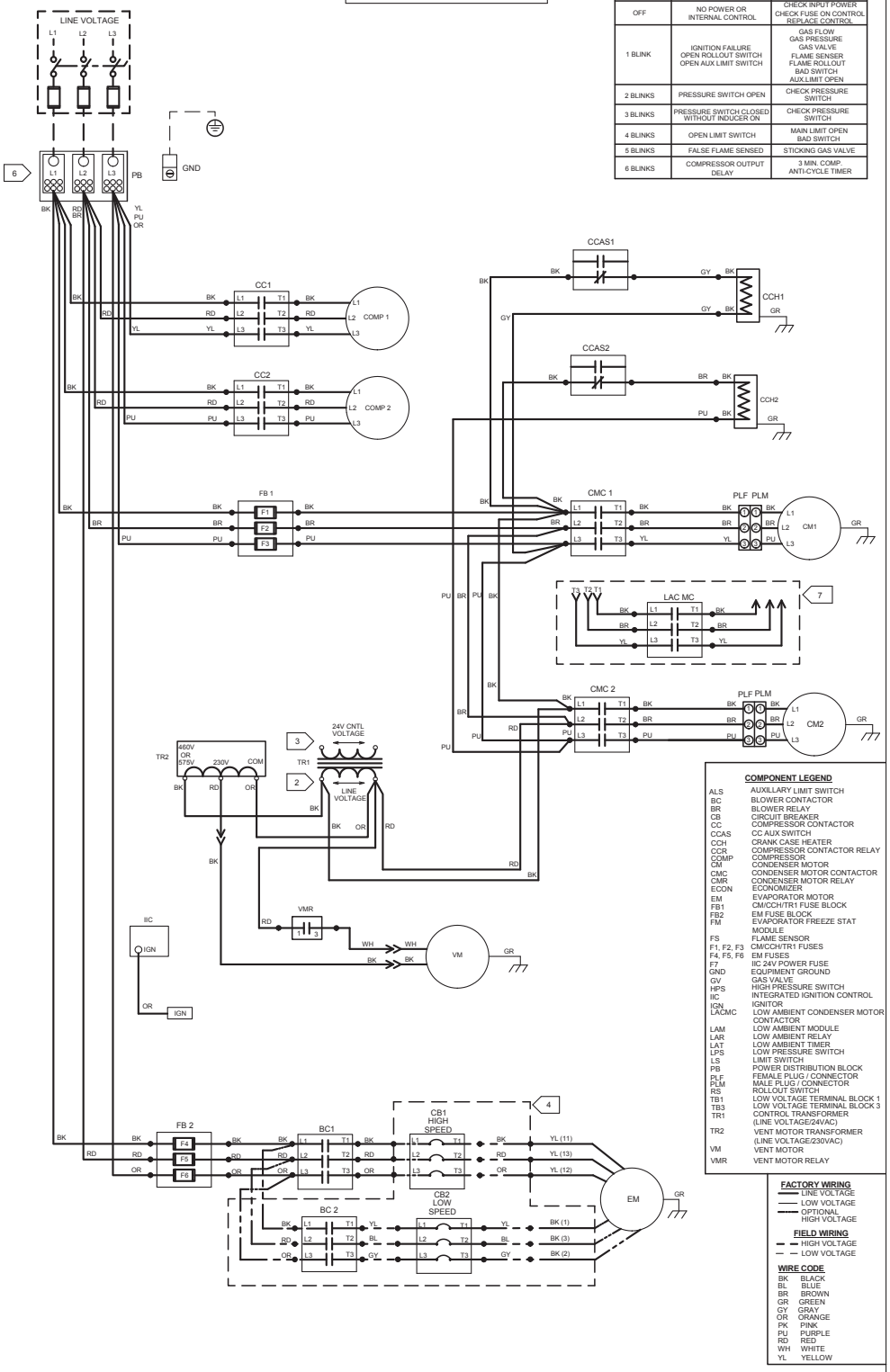

COMPONENT LEGEND

ALS	AUXILLARY LIMIT SWITCH
BC	BLOWER CONTACTOR
BR	BLOWER RELAY
CB	CIRCUIT BREAKER
CC	COMPRESSOR CONTACTOR
CCAS	CC AUX SWITCH
CCH	CRANK CASE HEATER
CCR	COMPRESSOR CONTACTOR RELAY
COMP	COMPRESSOR
CM	CONDENSER MOTOR
CMC	CONDENSER MOTOR CONTACTOR
CMR	CONDENSER MOTOR RELAY
ECON	ECONOMIZER
EM	EVAPORATOR MOTOR
FB1	CM/CCH/TR1 FUSE BLOCK
FB2	EM FUSE BLOCK
FM	EVAPORATOR FREEZE STAT MODULE
FS	FLAME SENSOR
F1, F2, F3	CM/CCH/TR1 FUSES
F4, F5, F6	EM FUSES
F7	IIC 24V POWER FUSE
GND	EQUIPMENT GROUND
GV	GAS VALVE
HPS	HIGH PRESSURE SWITCH
IIC	INTEGRATED IGNITION CONTROL
IGN	IGNITOR
LACMC	LOW AMBIENT CONDENSER MOTOR CONTACTOR
LAM	LOW AMBIENT MODULE
LAR	LOW AMBIENT RELAY
LAT	LOW AMBIENT TIMER
LPS	LOW PRESSURE SWITCH
LS	LIMIT SWITCH
PB	POWER DISTRIBUTION BLOCK
PLF	FEMALE PLUG / CONNECTOR
PLM	MALE PLUG / CONNECTOR
RS	ROLLOUT SWITCH
TB1	LOW VOLTAGE TERMINAL BLOCK 1
TB3	LOW VOLTAGE TERMINAL BLOCK 3
TR1	CONTROL TRANSFORMER (LINE VOLTAGE/24VAC)
TR2	VENT MOTOR TRANSFORMER (LINE VOLTAGE/230VAC)
VM	VENT MOTOR
VMR	VENT MOTOR RELAY

FACTORY WIRING
- LINE VOLTAGE
- LOW VOLTAGE
- OPTIONAL HIGH VOLTAGE

FIELD WIRING
- HIGH VOLTAGE
- LOW VOLTAGE

WIRE CODE

BK	BLACK
BL	BLUE
BR	BROWN
GR	GREEN
GY	GRAY
OR	ORANGE
PK	PINK
PU	PURPLE
RD	RED
WH	WHITE
YL	YELLOW

NOTES:

1. REPLACEMENT WIRE MUST BE SAME SIZE AND TYPE OF INSULATION AS ORIGINAL (USE COPPER CONDUCTORS ONLY).
2. THE CONTROL TRANSFORMER HAS MULTIPLE HIGH VOLTAGE TAPS. ENSURE WIRE CONNECTIONS ARE CORRECT FOR UNIT SUPPLY VOLTAGE RATING
3. SEE CONTROL DIAGRAM FOR CONTROL TRANSFORMER LOW VOLTAGE CONNECTIONS
4. OPTIONAL; CB1,CB2,BC2 AND ASSOCIATED WIRING IS PRESENT ONLY WITH 2-SPEED EVAPORATOR MOTOR.
5. USE COPPER CONDUCTORS ONLY. UNIT TERMINALS ARE NOT DESIGNED FOR OTHER CONDUCTORS. THE USE OF OTHER TYPE CONDUCTORS MAY CAUSE DAMAGE TO THE UNIT.
6. SEE ACCESSORY KIT LITERATURE FOR OPTIONAL CONVENIENCE OUTLET WIRING DIAGRAM.
7. IF LOW AMBIENT KIT INSTALLED, DISCONNECT CONDENSER MOTOR WIRES (BK,BR,YL) FROM CMC1 (T1,T2,T3) AND CONNECT TO CORRESPONDING BK,BR,YL WIRES ON LOW AMBIENT HARNESS (INSULATED MALE QUICK CONNECT). ALSO CONNECT LOW AMBIENT HARNESS WIRES (BK,BR,YL) (INSULATED FEMALE QUICK CONNECT) TO T1,T2,T3 ON CMC1.

0140L04898-B

Wiring is subject to change. Always refer to the wiring diagram on the unit for the most up-to-date wiring.

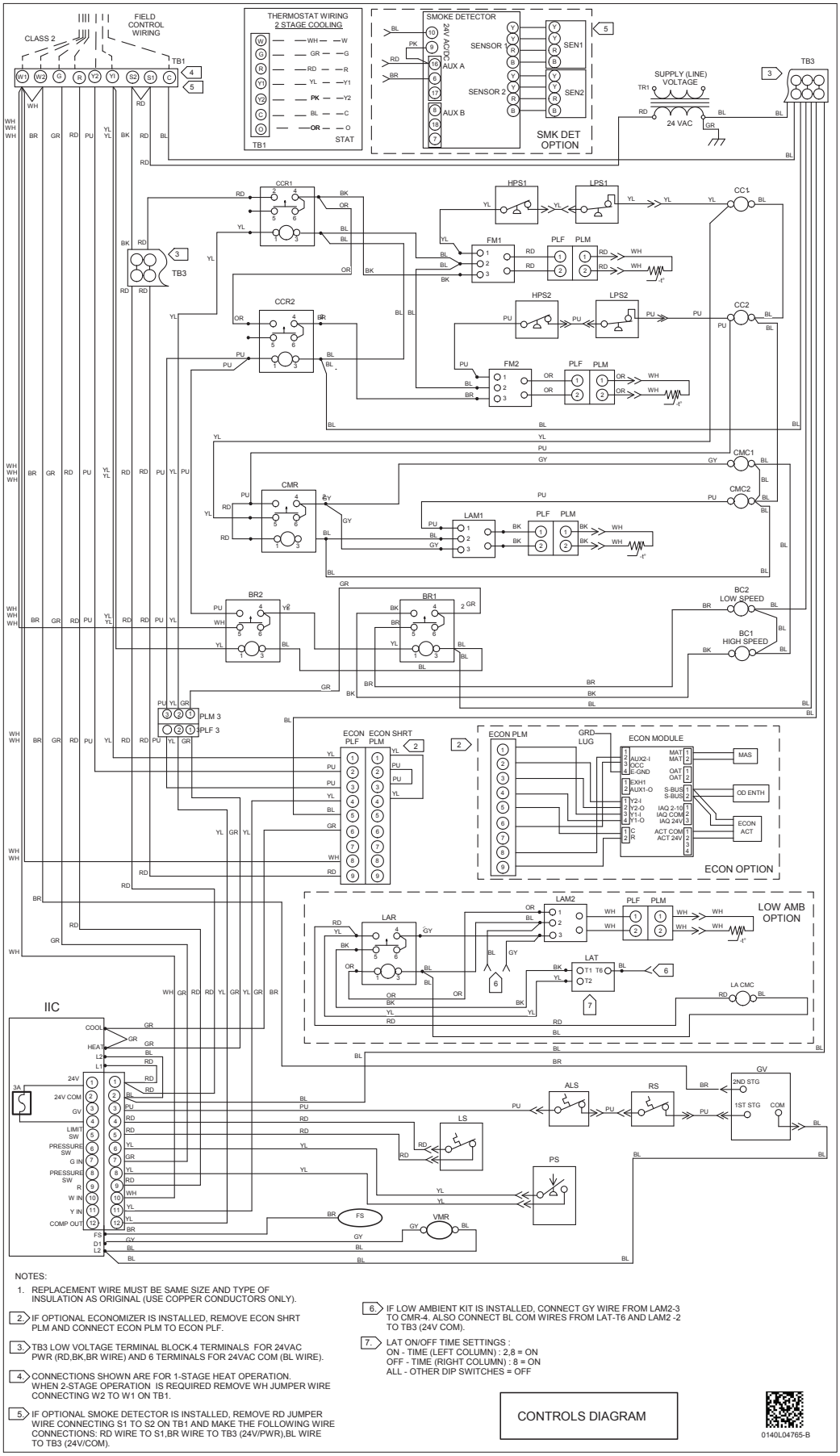

NOTES:

1. REPLACEMENT WIRE MUST BE SAME SIZE AND TYPE OF INSULATION AS ORIGINAL (USE COPPER CONDUCTORS ONLY).
2. IF OPTIONAL ECONOMIZER IS INSTALLED, REMOVE ECON SHRT PLM AND CONNECT ECON PLM TO ECON PLF.
3. TB3 LOW VOLTAGE TERMINAL BLOCK.4 TERMINALS FOR 24VAC PWR (RD,BK,BR WIRE) AND 6 TERMINALS FOR 24VAC COM (BL WIRE).
4. CONNECTIONS SHOWN ARE FOR 1-STAGE HEAT OPERATION. WHEN 2-STAGE OPERATION IS REQUIRED REMOVE WH JUMPER WIRE CONNECTING W2 TO W1 ON TB1.
5. IF OPTIONAL SMOKE DETECTOR IS INSTALLED, REMOVE RD JUMPER WIRE CONNECTING S1 TO S2 ON TB1 AND MAKE THE FOLLOWING WIRE CONNECTIONS: RD WIRE TO S1,BR WIRE TO TB3 (24V/PWR),BL WIRE TO TB3 (24V/COM).
6. IF LOW AMBIENT KIT IS INSTALLED, CONNECT GY WIRE FROM LAM2-3 TO CMR-4. ALSO CONNECT BL COM WIRES FROM LAT-T6 AND LAM2 -2 TO TB3 (24V COM).
7. LAT ON/OFF TIME SETTINGS :
   ON - TIME (LEFT COLUMN) : 2,8 = ON
   OFF - TIME (RIGHT COLUMN) : 8 = ON
   ALL - OTHER DIP SWITCHES = OFF

CONTROLS DIAGRAM

0140L04765-B

Wiring is subject to change. Always refer to the wiring diagram on the unit for the most up-to-date wiring.

Start-up Checklist

**Store in job file*

Date: _____ Location: _____

Model Number: _____ _____

Serial Number: _____ _____

Technician: _____ Unit #: _____

Pre Start-Up

(Check each item as completed)

- ☐ Verify all packaging material has been removed.
- ☐ Remove all shipping brackets per installation instructions.
- ☐ Verify the job site voltage agrees with the unit serial plate.
- ☐ Verify condensate connection is installed per installation instructions.
- ☐ Verify proper clearance around the unit for safety, service, maintenance and proper unit operation.
- ☐ Verify proper weatherproofing of all ductwork, roof curbs and electrical connections.
- ☐ Check that the flue screen is in place.
- ☐ Check gas piping for leaks.
- ☐ Verify gas pressure to the unit is within the range specified on the serial plate.
- ☐ Check to ensure that all fans, pulleys and wheels are secure.
- ☐ Check for proper belt tension and alignment per installation instructions.
- ☐ Check refrigerant piping for rubbing and leaks. *Repair if necessary.*
- ☐ Check unit wiring to ensure it is not in contact with refrigerant piping or sharp metal edges.
- ☐ Check all electrical connections and terminals. *Tighten as needed.*
- ☐ Verify that the crankcase heaters have been energized for 24 hours.
- ☐ Verify the scroll compressor(s) are rotating in the right direction.
- ☐ Verify all accessories are installed and operating correctly.
- ☐ Check filters and replace if necessary.
- ☐ Verify the installation of the thermostat.

9/2014

Start-up Checklist

Start-Up

(Insert the values as each item is completed.)

ELECTRICAL

Supply Voltage	L1 - L2	_____	L2 - L3	_____	L3 - L1	_____
Circuit 1 Compressor Amps	L1	_____	L2	_____	L3	_____
Circuit 2 Compressor Amps	L1	_____	L2	_____	L3	_____
Blower Amps	L1	_____	L2	_____	L3	_____
Condenser Fan Amps	Fan 1	_____	Fan 2	_____	Fan 3	_____

BLOWER EXTERNAL STATIC PRESSURE

Return Air Static Pressure	_____	IN. W.C.
Supply Air Static Pressure	_____	IN. W.C.
Total External Static Pressure	_____	IN. W.C.
Blower Wheel RPM	_____	RPM

TEMPERATURES

Outdoor Air Temperature	_____	DB	_____	WB
Return Air Temperature	_____	DB	_____	WB
Cooling Supply Air Temperature	_____	DB	_____	WB
Heating Supply Air Temperature	_____	DB		

PRESSURES

Gas Inlet Pressure	_____	IN. W.C.		
Gas Manifold Pressure	_____	IN. W.C. (Low Fire)	_____	IN. W.C. (High Fire)
Suction Circuit 1	_____	PSIG	_____	°F
Superheat (Orifice System)			_____	°F
Suction Circuit 2	_____	PSIG	_____	°F
Superheat (Orifice System)			_____	°F
Discharge Circuit 1	_____	PSIG	_____	°F
Subcooling (TXV System)			_____	°F
Discharge Circuit 2	_____	PSIG	_____	°F
Subcooling (TXV System)			_____	°F

(HEAT PUMP ONLY)

Suction Circuit 1	_____	PSIG	_____	°F
Suction Circuit 2	_____	PSIG	_____	°F
Discharge Circuit 1	_____	PSIG	_____	°F
Discharge Circuit 2	_____	PSIG	_____	°F

THIS PAGE INTENTIONALLY LEFT BLANK

CUSTOMER FEEDBACK
Daikin is very interested in all product comments.
Please fill out the feedback form on the following link:
https://daikincomfort.com/contact-us
You can also scan the QR code on the right to be directed to the feedback page.

Our continuing commitment to quality products may mean a change in specifications without notice.

©2019 **DAIKIN COMPANY, L.P.**
5151 San Felipe St., Suite 500, Houston, TX 77056
www.daikinac.com