AHVE***P0300** (115V)
AIR HANDLERS INSTALLATION & OPERATING INSTRUCTIONS

© 2026 Daikin Comfort Technologies Manufacturing, Inc.
19001 Kermier Rd., Waller, TX 77484
www.goodmanmfg.com - or - www.amana-hac.com
P/N: IOA-4055C Date: April 2026

WARNING

ONLY PERSONNEL THAT HAVE BEEN TRAINED TO INSTALL, ADJUST, SERVICE, MAINTENANCE OR REPAIR (HEREINAFTER, "SERVICE") THE EQUIPMENT SPECIFIED IN THIS MANUAL SHOULD SERVICE THE EQUIPMENT.
THIS EQUIPMENT IS NOT INTENDED FOR USE BY PERSONS (INCLUDING CHILDREN) WITH REDUCED PHYSICAL, SENSORY OR MENTAL CAPACITIES, OR LACK OF EXPERIENCE AND KNOWLEDGE, UNLESS THEY HAVE BEEN GIVEN SUPERVISION OR INSTRUCTION CONCERNING USE OF THE APPLIANCE BY A PERSON RESPONSIBLE FOR THEIR SAFETY. CHILDREN SHOULD BE SUPERVISED TO ENSURE THAT THEY DO NOT PLAY WITH THE EQUIPMENT.
THE MANUFACTURER WILL NOT BE RESPONSIBLE FOR ANY INJURY OR PROPERTY DAMAGE ARISING FROM IMPROPER SUPERVISION, SERVICE OR SERVICE PROCEDURES. IF YOU SERVICE THIS UNIT, YOU ASSUME RESPONSIBILITY FOR ANY INJURY OR PROPERTY DAMAGE WHICH MAY RESULT. IN ADDITION, IN JURISDICTIONS THAT REQUIRE ONE OR MORE LICENSES TO SERVICE THE EQUIPMENT SPECIFIED IN THIS MANUAL, ONLY LICENSED PERSONNEL SHOULD SERVICE THE EQUIPMENT. IMPROPER SUPERVISION, INSTALLATION, ADJUSTMENT, SERVICING, MAINTENANCE OR REPAIR OF THE EQUIPMENT SPECIFIED IN THIS MANUAL, OR ATTEMPTING TO INSTALL, ADJUST, SERVICE OR REPAIR THE EQUIPMENT SPECIFIED IN THIS MANUAL WITHOUT PROPER SUPERVISION OR TRAINING MAY RESULT IN PRODUCT DAMAGE, PROPERTY DAMAGE, PERSONAL INJURY OR DEATH.

WARNING

DO NOT BYPASS SAFETY DEVICES.

RECOGNIZE THIS SYMBOL AS A SAFETY PRECAUTION.

CAUTION

ELECTRIC HEATER CANNOT BE CONNECTED TO ANY OF THESE AIR HANDLERS.

NOTE

Specifications and performance data listed herein are subject to change without notice.
This equipment is only approved for use with R-32 Refrigerant.

NOTE

The installer must refer to section table 1 for the maximum possible refrigerant charge and minimum (air conditioned) room area which must be recorded on the serial plate.

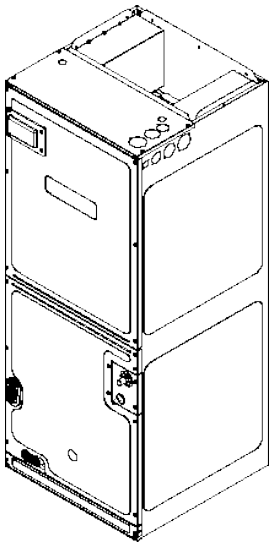

QUEBEC DISCLOSURE REGARDING AVAILABILITY OF REPLACEMENT PARTS, REPAIR SERVICES AND INFORMATION FOR MAINTENANCE AND REPAIR: Daikin Comfort Technologies Manufacturing, Inc. (Daikin) does not guarantee the availability of (1) replacement parts; (2) repair services; and (3) information necessary to maintain or repair products, within the meaning of section 39.1 of the Consumer Protection Act, CQLR, c P-40.1 and section 79.18 of the Regulation respecting the application of the Consumer Protection Act, CQLR, c P-40.1, r. 3.

AVIS POUR LE QUÉBEC CONCERNANT LA DISPONIBILITÉ DES PIÈCES DE RECHANGE, DES SERVICES DE RÉPARATION ET DES RENSEIGNEMENTS POUR L'ENTRETIEN ET LA RÉPARATION : Daikin Comfort Technologies Manufacturing, Inc. (Daikin) ne garantit pas la disponibilité (1) des pièces de rechange, (2) des services de réparation et (3) des renseignements pour l'entretien et la réparation, au sens de l'article 39.1 de la Loi sur la protection du consommateur, RLRQ c P-40.1 et de l'article 79.18 du Règlement d'application de la Loi sur la protection du consommateur, RLRQ c P-40.1, r 3.

1 Important Safety Instructions 2
2 Shipping Inspection 3
2.1 Parts 3
2.2 Handling 3
3 Codes & Regulations 3
4 Replacement Parts 4
5 Pre-Installation Considerations 4
5.1 Preparation 4
5.2 System Matches 4
5.3 Interconnecting Tubing 4
5.4 Clearances 4
5.5 Horizontal Applications 5
5.6 Access 5
6 Installation Location 5
6.1 Upflow Installation 5
6.2 Horizontal Left Installation 5
6.2.1 Instructions To Relocate A2L Sensor Bracket Assembly From Upflow to Horizontal Left 5
6.3 Downflow/Horizontal Right Installation 8
6.3.1 Instructions To Relocate A2L Sensor Bracket Assembly From Downflow to Horizontal Right 9

Amana® is a registered trademark of Maytag Corporation or its related companies and is used under license.
All rights reserved.

7 Refrigerant Lines 9
7.1 Tubing Size 9
7.2 Tubing Preparation 9
7.3 Tubing Connections 10
8 Condensate Drain Lines 11
9 Ductwork 12
9.1 Return Ductwork 12
10 Return Air Filters 12
11 Electrical and Control Wiring 12
11.1 Building Electrical Service Inspection 12
11.2 Wire Sizing 12
11.3 Maximum Overcurrent Protection (MOP) 12
11.4 Electrical Connections – Supply Voltage 13
11.4.1 Air Handler Only 13
11.5 Low Voltage Connections 13
12 Achieving 1.4% & 2% Low Leakage Rate 13
13 Airflow Trim 13
14 Miscellaneous Start-Up Checklist 14
14.1 Auxiliary Alarm Switch 15
14.2 Circulator Blower 15
14.3 Motor Orientation 15
14.4 Accessory Contacts 15
14.5 Leak Detection Output (Relay K4R) 16
15 Troubleshooting 16
15.1 Electrostatic Discharge (ESD) Precautions 16
15.2 Diagnostic Chart 17
15.3 Fault Recall 17
16 Fully Communicating Amana® Brand System 17
16.1 Overview 17
16.2 Airflow Consideration 17
16.3 Thermostat Wiring 18
16.3.1 Two-Wire Outdoor and Four-Wire Indoor Wiring 18
16.4 Network Troubleshooting 18
16.5 System Troubleshooting 18
16.6 Refrigeration Detection System RDS 19
16.7 Refrigerant Leak Test 19
Troubleshooting 20
Diagnostic Codes 23
Setting The Mode Display 24
Wiring Diagram 26
Routine Maintenance 27
Start-Up Checklist 29

1 IMPORTANT SAFETY INSTRUCTIONS

The following symbols and labels are used throughout this manual to indicate immediate or potential safety hazards. It is the owner's and installer's responsibility to read and comply with all safety information and instructions accompanying these symbols. Failure to heed safety information increases the risk of personal injury, property damage, and/or product damage.

NOTICE: THIS PRODUCT CONTAINS ELECTRONIC COMPONENTS WHICH REQUIRE A DEFINITE GROUND. PROVISIONS ARE MADE FOR CONNECTION OF THE GROUND. A DEDICATED GROUND FROM THE MAIN POWER SUPPLY OR AN EARTH GROUND MUST BE PROVIDED.

WARNING

HIGH VOLTAGE
Disconnect all power before servicing or installing this unit. Multiple power sources may be present. Failure to do so may cause property damage, personal injury or death.

WARNING

To prevent the risk of property damage, personal injury, or death, do not store combustible materials or use gasoline or other flammable liquids or vapors in the vicinity of this unit.

WARNING

To avoid property damage, personal injury or death due to electrical shock, this unit MUST have an uninterrupted, unbroken electrical ground. The electrical ground circuit may consist of an appropriately sized electrical wire connecting the ground lug in the unit control box to the building electrical service panel.
Other methods of grounding are permitted if performed in accordance with the National Electric Code (NEC)/American National Standards Institute (ANSI)/National Fire Protection Association (NFPA) 70 and local/state codes. In Canada, electrical grounding is to be in accordance with the Canadian Electric Code (CSA) C22.1.

CAUTION

When installing or servicing this equipment, safety clothing, including hand and eye protection, is strongly recommended. If installing in an area that has special safety requirements (hard hats, etc.), observe these requirements.

WARNING

This product is factory-shipped for use with 115V/1PH/60Hz electrical power supply. DO NOT reconfigure this air handler to operate with any other power supply.

WARNING

A refrigerant leak detection system is installed. The unit must be powered on all times except for service.

WARNING

Do not connect to or use any device that is not certified by the manufacturer for use with this unit. Serious property damage, personal injury, reduced unit performance and/or hazardous conditions may result from the use of such non-approved devices.

WARNING

Failure to properly reconnect sensor wires may result in Error codes and the unit not operating.

DANGER
PELIGRO

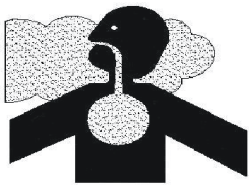

CARBON MONOXIDE POISONING HAZARD

Special Warning for Installation of Furnace or Air Handling Units in Enclosed Areas such as Garages, Utility Rooms or Parking Areas

Carbon monoxide producing devices (such as an automobile, space heater, gas water heater, etc.) should not be operated in enclosed areas such as unventilated garages, utility rooms or parking areas because of the danger of carbon monoxide (CO) poisoning resulting from the exhaust emissions. If a furnace or air handler is installed in an enclosed area such as a garage, utility room or parking area and a carbon monoxide producing device is operated therein, there must be adequate, direct outside ventilation.

This ventilation is necessary to avoid the danger of CO poisoning which can occur if a carbon monoxide producing device continues to operate in the enclosed area. Carbon monoxide emissions can be (re)circulated throughout the structure if the furnace or air handler is operating in any mode.

CO can cause serious illness including permanent brain damage or death. B10259-216

RIESGO DE INTOXICACIÓN POR MONÓXIDO DE CARBONO

Advertencia especial para la instalación de calentadores ó manejadoras de aire en áreas cerradas como estacionamientos ó cuartos de servicio.

Los equipos ó aparatos que producen monóxido de carbono (tal como automóvil, calentador de gas, calentador de agua por medio de gas, etc) no deben ser operados en áreas cerradas debido al riesgo de envenenamiento por monóxido de carbono (CO) que resulta de las emisiones de gases de combustión. Si el equipo ó aparato se opera en dichas áreas, debe existir una adecuada ventilación directa al exterior.

Esta ventilación es necesaria para evitar el peligro de envenenamiento por CO, que puede ocurrir si un dispositivo que produce monóxido de carbono sigue operando en el lugar cerrado.

Las emisiones de monóxido de carbono pueden circular a través del aparato cuando se opera en cualquier modo.

El monóxido de carbono puede causar enfermedades severas como daño cerebral permanente ó muerte. B10259-216

RISQUE D'EMPOISONNEMENT AU MONOXYDE DE CARBONE

Avertissement special au sujet de l'installation d'appareils de chauffage ou de traitement d'air dans des endroits clos, tets les garages, les locaux d'entretien et les stationnements.

Evitez de mettre en marche les appareils produisant du monoxyde de carbone (tels que les automobile, les appareils de chauffage autonome,etc.) dans des endroits non ventilés tels que les d'empoisonnement au monoxyde de carbone. Si vous devez faire fonctionner ces appareils dans un endroit clos, assures-vous qu'il y ait une ventilation directe provenant de l'exterier.

Cette ventilation est nécessaire pour éviter le danger d'intoxication au CO pouvant survenir si un appareil produisant du monoxyde de carbone continue de fonctionner au sein de la zone confinée.

Les émissions de monoxyde de carbone peuvent etre recircules dans les endroits clos, si l'appareil de chauffage ou de traitement d'air sont en marche.

Le monoxyde de carbone peut causer des maladies graves telles que des dommages permanents au cerveau et meme la mort. B10259-216

2 SHIPPING INSPECTION

Always transport the unit upright; laying the unit on its side or top during transit may cause equipment damage. The installer should inspect the product upon receipt for shipping damage and subsequent investigation is the responsibility of the carrier. The installer must verify the model number, specifications, electrical characteristics, and accessories are correct prior to installation. The distributor or manufacturer will not accept claims from dealers for transportation damage or installation of incorrectly shipped units.

2.1 Parts

Inspect the unit to verify all required components are present and intact. Report any missing components immediately to the distributor. Use only factory authorized replacement parts (see Section 4). Make sure to include the full product model number and serial number when reporting and/or obtaining service parts.

2.2 Handling

Use caution when transporting/carrying the unit. Do not move unit using shipping straps. Do not carry unit with hooks or sharp objects. The preferred method of carrying the unit after arrival at the job site is to carry via a two-wheel hand truck from the back or sides or via hand by carrying at the cabinet corners. If carrying by hand, carry at the cabinet corners with two people. Avoid holding the unit by the piping.

WARNING

IF ANY HOT WORK IS TO BE CONDUCTED ON THE REFRIGERATING EQUIPMENT OR ANY ASSOCIATED PARTS, APPROPRIATE FIRE EXTINGUISHING EQUIPMENT SHALL BE AVAILABLE ON HAND. HAVE A DRY POWDER OR CO2 FIRE EXTINGUISHER ADJACENT TO THE HOT WORK.

ENSURE THAT THE AREA IS IN THE OPEN OR THAT IT IS ADEQUATELY VENTILATED BEFORE BREAKING INTO THE SYSTEM OR CONDUCTING ANY HOT WORK. A DEGREE OF VENTILATION SHALL CONTINUE DURING THE PERIOD THAT THE WORK IS CARRIED OUT. THE VENTILATION SHOULD SAFELY DISPERSE ANY RELEASED REFRIGERANT AND PREFERABLY EXPEL IT EXTENALLY INTO THE ATMOSPHERE.

3 CODES & REGULATIONS

This product is designed and manufactured to comply with applicable national codes such as ASHRAE 15, ASHRAE 15.2, IAPMO Uniform Mechanical Code, ICC International Mechanical Code, or CSA B52. Installation in accordance with such codes and/or prevailing local codes/regulations is the responsibility of the installer. The manufacturer assumes no responsibility for equipment installed in violation of any codes or regulations.

The United States Environmental Protection Agency (EPA) has issued various regulations regarding the introduction and disposal of refrigerants. Failure to follow these regulations may harm the environment and can lead to the imposition of substantial fines. Should you have any questions please contact the local office of the EPA and/or refer to EPA's website www.epa.gov.

4 REPLACEMENT PARTS

When reporting shortages or damages, or ordering repair parts, give the complete product model and serial numbers as stamped on the product. Replacement parts for this product are available through your contractor or local distributor. For the location of your nearest distributor contact:

HOMEOWNER SUPPORT
DAIKIN COMFORT TECHNOLOGIES
MANUFACTURING, INC.
19001 KERMIER ROAD
WALLER, TEXAS 77484
855-770-5678

5 PRE-INSTALLATION CONSIDERATIONS

5.1 Preparation

Keep this document with the unit. Carefully read all instructions for the installation prior to installing product. Make sure each step or procedure is understood and any special considerations are taken into account before starting installation. Assemble all tools, hardware and supplies needed to complete the installation. Some items may need to be purchased locally. Make sure everything needed to install the product is on hand before starting.

5.2 System Matches

WARNING

PARTIAL UNITS SHALL ONLY BE CONNECTED TO AN APPLIANCE SUITABLE FOR THE SAME REFRIGERANT. THIS UNIT IS A PARTIAL UNIT AIR CONDITIONER, COMPLYING WITH PARTIAL UNIT REQUIREMENTS OF THIS INTERNATIONAL STANDARD, AND MUST ONLY BE CONNECTED TO OTHER UNITS THAT HAVE BEEN CONFIRMED AS COMPLYING TO CORRESPONDING PARTIAL UNIT REQUIREMENTS OF THIS INTERNATIONAL STANDARD.

The entire system (combination of indoor and outdoor sections) must be manufacturer approved and Air-Conditioning, Heating, and Refrigeration Institute (AHRI) listed. **NOTE:** Installation of unmatched systems is not permitted. Damage or repairs due to installation of unmatched systems is not covered under the warranty.

5.3 Interconnecting Tubing

Give special consideration to minimize the length of refrigerant tubing when installing air handlers. Refer to outdoor HEAT PUMP INSTALLATION & SERVICE REFERENCE for line set configuration guidelines. If possible, allow adequate length of tubing such that the coil may be removed (for inspection or cleaning services) from the cabinet without disconnecting the tubing.

5.4 Clearances

WARNING

WHEN INSTALLED IN A ROOM WITH AN AREA LESS THAN THAT OUTLINED IN TABLE 1, THAT ROOM SHALL BE WITHOUT CONTINUOUSLY OPERATING OPEN FLAMES (FOR EXAMPLE AN OPERATING GAS APPLIANCE) OR OTHER POTENTIAL IGNITION SOURCES (FOR EXAMPLE AN OPERATING ELECTRIC HEATER, HOT SURFACES).

WARNING

AUXILIARY DEVICES WHICH MAY BE A POTENTIAL IGNITION SOURCE ARE NOT TO BE INSTALLED IN THE DUCT WORK. SUCH POTENTIAL IGNITION SOURCES INCLUDE HOT SURFACES WITH A TEMPERATURE EXCEEDING 700°C AND ELECTRIC SWITCHING DEVICES.

WARNING

ONLY AUXILIARY DEVICES APPROVED BY THE APPLIANCE MANUFACTURER OR DECLARED SUITABLE WITH THE REFRIGERANT SHALL BE INSTALLED IN CONNECTING DUCTWORK.

Total System Refrigerant Charge (oz)	Total System Refrigerant Charge (kg)	Minimum Air Conditioned Room Area (ft^2)	Minimum Air Conditioned Room Area (m^2)	Minimum Required Mitigation Airflow (CFM)	Minimum Required Mitigation Airflow (m^3/hr)
31~50	0.86~1.42	46	4.22	83	140
51~100	1.42~2.84	91	8.44	165	279
101~150	2.84~4.26	137	12.66	247	418
151~200	4.26~5.67	182	16.85	328	556
201~250	5.67~7.09	227	21.07	410	696
251~300	7.09~8.51	273	25.29	492	835
301~350	8.51~9.93	318	29.51	574	974
351~400	9.93~11.34	363	33.69	655	1112
401~450	11.34~12.76	409	37.91	737	1251
451~500	12.76~14.18	454	42.13	819	1391
501~550	14.18~15.6	499	46.35	901	1530
551~600	15.6~17.01	545	50.54	982	1668

TABLE 1

The Indoor equipment mitigation requirements are calculated at sea level. For higher altitudes adjust the minimum room area by the corresponding altitude adjustment factor shown below. This table is provided as a reference.

Adjusted room area (Amin adj) is the product of the minimum air conditioned room area and the adjustment factor AF, as shown in below formula

Amin adj = Amin (Minimum air conditioned room area from table 1) * AF

Height in meters	Height in feet	Altitude Adjustment Factor (AF)
At sea level	At sea level	1
1~200	1~660	1.02
200~400	660~1320	1.03
400~600	1320~1970	1.05
600~800	1970~2630	1.07
800~1000	2630~3290	1.09
1000~1200	3290~3940	1.11
1200~1400	3940~4600	1.13
1400~1600	4600~5250	1.15
1600~1800	5250~5910	1.17
1800~2000	5910~6570	1.19
2000~2200	6570~7220	1.21
2200~2400	7220~7880	1.24
2400~2600	7880~8540	1.26
2600~2800	8540~9190	1.29
2800~3000	9190~9850	1.31
3000~3200	9850~10500	1.34

Table 2

NOTE: THE ALTITUDE ADJUSTMENT FACTOR (AF) FOR ANY ALTITUDES BELOW SEA LEVEL WILL BE 1.00

The unit clearance from a combustible surface may be 0”. However, service clearance must take precedence. A minimum of 24” in front of the unit for service clearance is required. Additional clearance on one side or top will be required for electrical wiring connections. Consult all appropriate regulatory codes prior to determining final clearances. When installing this unit in an area that may become wet (such as crawl spaces), elevate the unit with a sturdy, non-porous material. In installations that may lead to physical damage (i.e. a garage) it is advised to install a protective barrier to prevent such damage. Always install units such that a positive slope in condensate line (1/4” per foot) is allowed.

Further, any joints made in the installation between parts of the refrigerating system must be accessible for maintenance purposes.

5.5 Horizontal Applications

If installed above a finished living space a secondary drain pan with float switch, as required by many building codes, must be installed under the entire unit and its condensate drain line must be routed to a location such that the user will see the condensate discharge.

5.6 Access

This unit should be installed in a manner so that it is not accessible to the public.

6 INSTALLATION LOCATION

NOTE: These air handlers are designed for indoor installation only at a max altitude of 10,500 feet above sea level or a min altitude of -184 feet below sea level (refer Table 2)

If the unit is located in an unconditioned area with high ambient temperature and/or high humidity, the air handler may be subject to nuisance sweating of the casing. On these installations, a wrap of 2” fiberglass insulation with a vapor barrier is recommended. Do not cover warning labels or serial plate.

Maximum operating pressure is considered when connecting to any condenser unit.

The EEV Series Air Handler product line may be installed in one of the upflow, downflow, horizontal left or horizontal right orientations as shown in Figures 3, 4, 5 and 6. The unit may be installed in upflow or horizontal left orientation as shipped (refer to specific sections for more information).

Minor field modifications are necessary to convert to downflow or horizontal right as indicated in below sections.
For AHVE* installations in areas where the return air environment sees humidity levels above 65% relative humidity, a High Humidity Kit (HHK) must be used. See Table 4 for Model and Kit assignment.

6.1 Upflow Installation

No field modifications are mandatory however to obtain maximum efficiency, the horizontal drip shield, side drain pan and drain pan extension, can be removed.

Side Drain Pan and Extension Removal: Refer to Figure 1, remove the two (2) screws that secure the drip shield support brackets to the condensate collectors (front and back). Unsnap the side drain pan from the bottom drain pan using a screw driver or any small lever. The side drain pan, drip shield brackets and the drain pan extension may now be removed. From Figure 1, drain port labeled (A) is the primary drain for this application and condensate drain line must be attached to this drain port. Drain port (a) is for the secondary drain line (if used).
If the side drain pan is removed, the drain port opening in the access panel must be covered by the accessory drain port plug (DPK1, refer to Table 3) as shown in figure 1-1.

6.2 Horizontal Left Installation

No field modifications are permissible for this application.

Drain port labeled (B) in Figure 1 is the primary drain for this application and condensate drain line must be attached to this drain port. Drain port (b) is for the secondary drain line (if used).
In applications where the air handler is installed in the horizontal left or right position, and the return air environment see humidity levels above 65% relative humidity coupled with total external static levels above 0.9” e.s.p., a Condensate Management Kit (CMK) is available for field application. Kit nomenclature can be found in the Table 5.

DRAIN PORT PLUG		
Kit Number	**Description**	**Application**
DPK1	Side Drain Port Plug	All Models

TABLE 3

6.2.1 Instructions To Relocate A2L Sensor Bracket Assembly From Upflow To Horizontal Left

1. Take off the coil access panel
2. Take off the drain port gaskets from Figure 1, drain port labeled (A) and (B) on main drain pan and side drain pan
3. Take off the A2L sensor bracket assembly as shown in Figure 1
4. Put A2L sensor bracket assembly to the side drain port correctly as shown in the figure 5. The “FRONT 0121A*****” print on sensor bracket should be in the front
5. Place gaskets back to the drain ports correctly. The “FRONT” print on the gaskets should be in the front.
6. Sensor wiring should be routed as shown in Figure 5.
7. Reassemble the blower access panel to the unit.

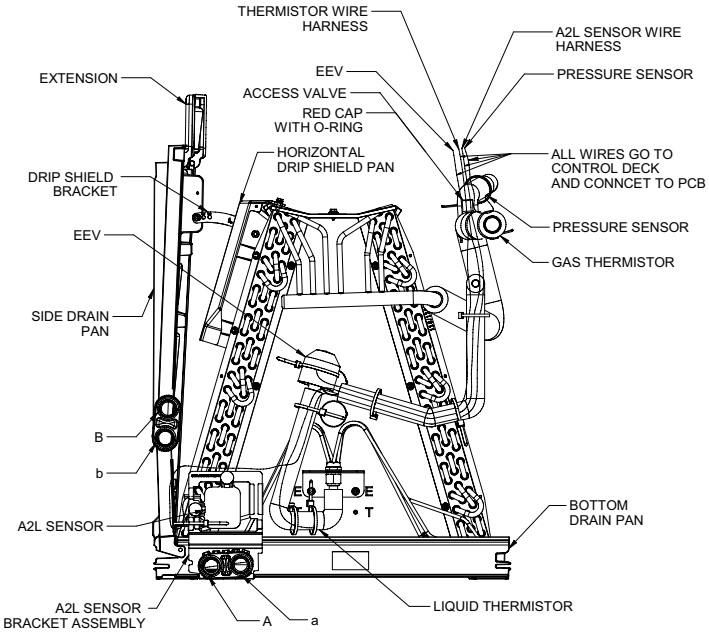

DRIP SHIELD REMOVAL
FIGURE 1

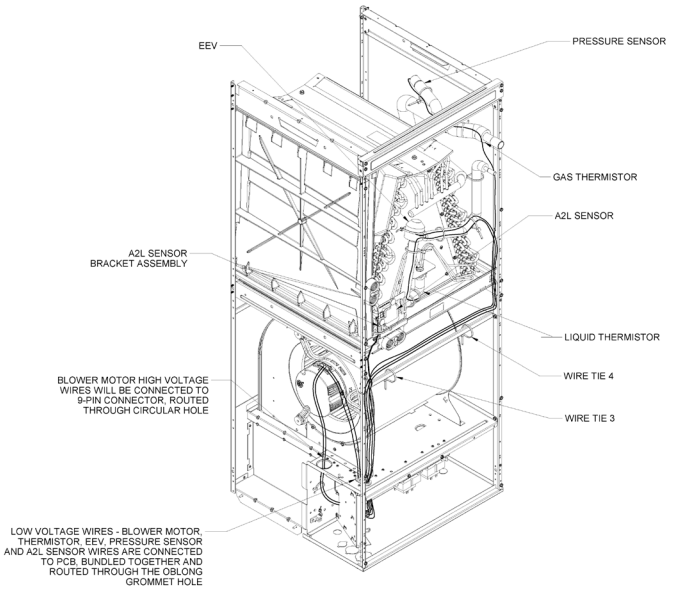

WIRE TIE LOCATION TO BE SECURED
FIGURE 2-2

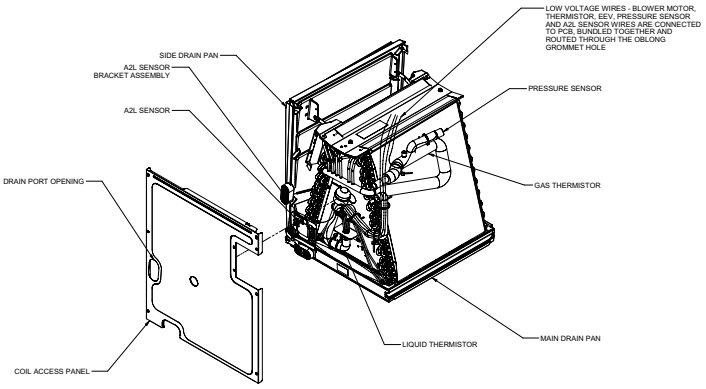

FIGURE 1-1

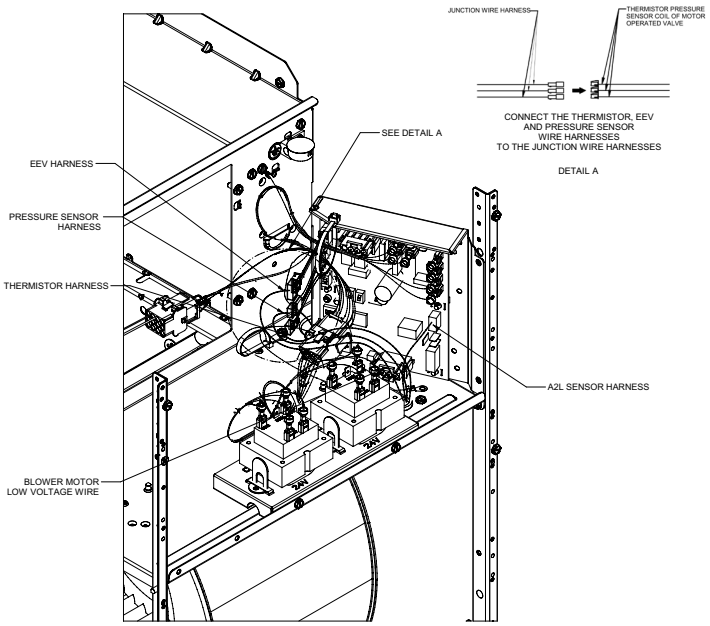

FIGURE 2-3

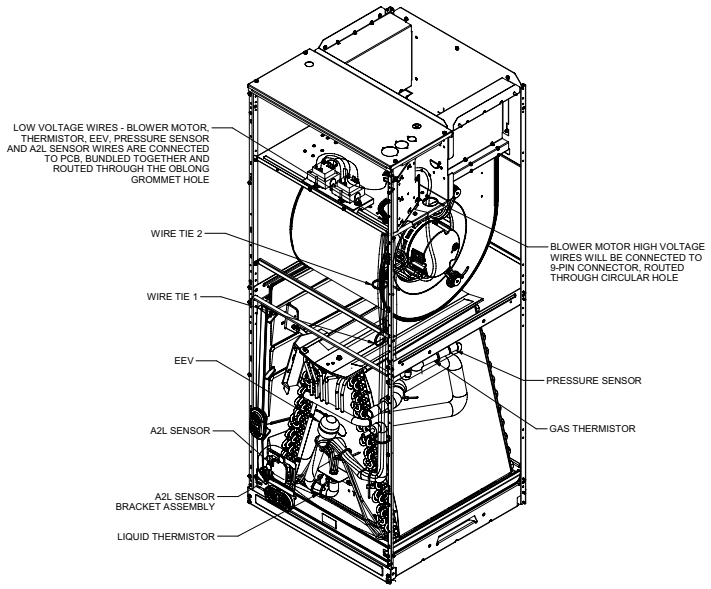

WIRE TIE LOCATION TO BE REMOVED
FIGURE 2-1

NOTE: If removing only the coil access panel from the unit, the filter access panel <u>must</u> be removed first. Failure to do so may result in panel damage.

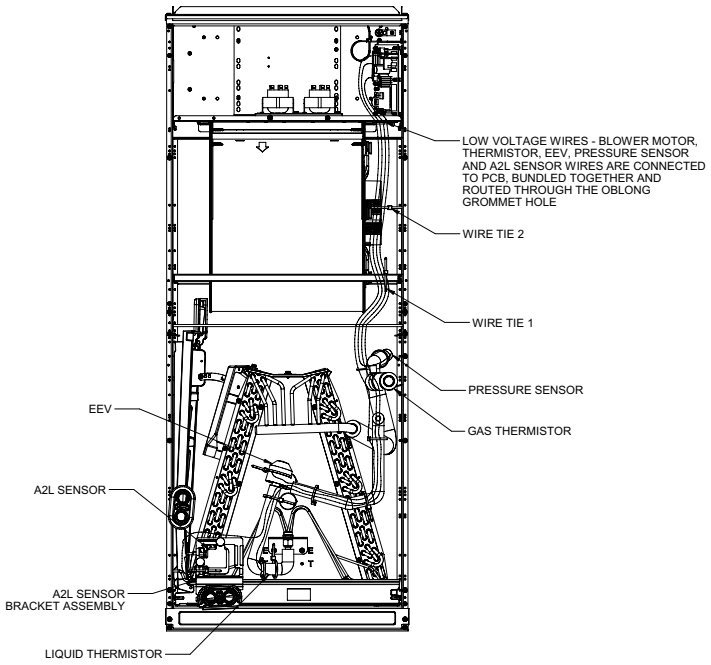

UPFLOW
FIGURE 3

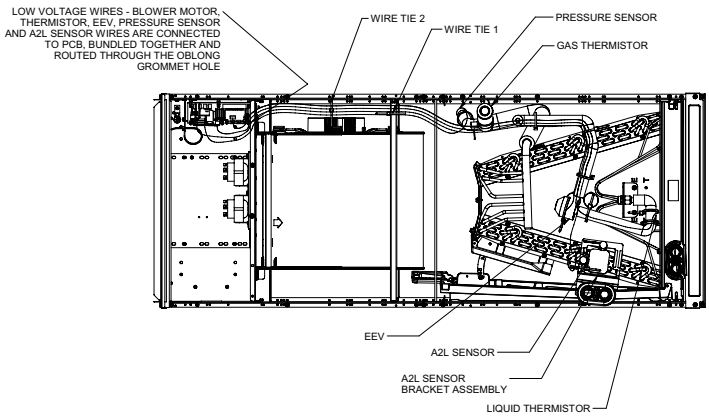

HORIZONTAL LEFT
FIGURE 5

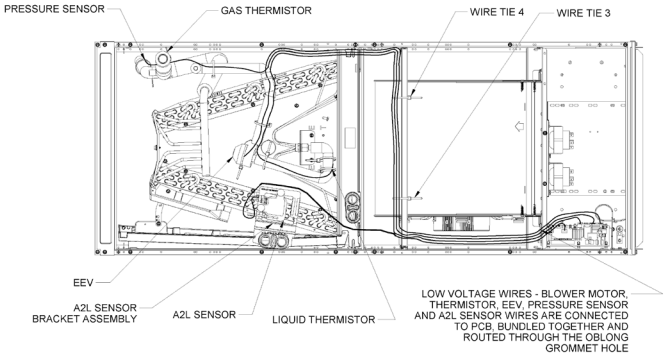

HORIZONTAL RIGHT
FIGURE 6

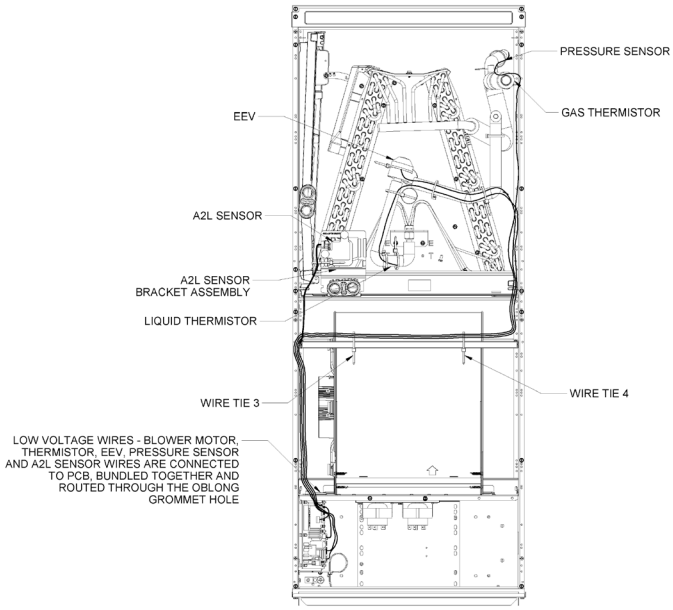

DOWNFLOW
FIGURE 4

High Humidity Kit			
HHK0001	HHK0002	HHK0003	HHK0011
AHVE24BP1300	AHVE36CP1300 AHVE42CP1300	AHVE48DP1300 AHVE60DP1300	AHVE48CP1300

HIGH HUMIDITY KIT
Table 3

CMK0015 Condensate Kit	CMK0016 Condensate Kit	CMK0017 Condensate Kit
AHVE24BP1300	AHVE36CP1300 AHVE42CP1300 AHVE48CP1300	AHVE48DP1300 AHVE60DP1300

CONDENSATE KIT
Table 4

DFKE-02 Down ow Kit
AHVE24BP1300
AHVE36CP1300
AHVE42CP1300
AHVE48CP1300
AHVE48DP1300
AHVE60DP1300

DOWNFLOW KIT
Table 5

NOTE: If removing only the coil access panel from the unit, the filter access panel must be removed first. Failure to do so may result in panel damage.

6.3 Downflow/Horizontal Right Installation

IMPORTANT NOTE: In the downflow application, to prevent coil pan “sweating”, the mandatory downflow kit (DFK) is available through your local distributor. The DFK is not supplied with the air handler and is required to minimize pan sweating on all downflow installations. See Table 5 for the correct DFK and follow the instructions provided for installation.

NOTE: For AHVE* only: If installing a filter, an external filter must be used when installing the unit in Horizontal Right (Figure 6), or if the side drain pan is not removed for Down Flow application. A filter will not fit on the internal filter rails in these applications.

Refer to Figure 7 and 8 for the location of the components referenced in the following steps.

1. Before flipping the air handler, remove blower access panel and coil access panel. The coil access panel and tubing panel may remain screwed together during this procedure. Remove and retain the seven (7) screws securing the coil access panel to the cabinet and the six (6) screws securing the blower access panel to the cabinet.
2. Before removing the coil, Cut Wire Tie 1, 2 shown in Figure 2-1 and disconnect sensor wires (Thermistor Wire Harness, A2L Sensor Wire Harness, EEV Wire Harness and Pressure sensor Wire Harness) from wire harnesses connectors connected to PCB as shown in Figure 2-3 and secure. Unbundled the wires by cutting Wire Tie.

Separate the A2L Sensor Wire Harness from the bundle to reroute as shown in Figure 4 and 6.

NOTE: Do not use manifolds, copper lines or the flowrator to pull the coil assembly out. Failure to do so may result in braze joint damage and leaks.

3. Slide the coil assembly out using the bottom drain pan to pull the assembly from the cabinet.
4. For flipping the coil, drain pan extension must be removed for all models. Center support should not be removed while removing the drain pan extension. Side drain pan and horizontal drip shield can be removed for downflow application. The side drain pan and horizontal drip shield cannot be removed for horizontal right.
5. Using the bottom drain pan to hold the coil assembly, slide the coil assembly back into the cabinet on the downflow brackets as shown in Figure 9.
6. Reroute the wire harnesses shown in Figure 4 (Downflow) and Figure 6 (Horizontal Right), secure with Wire Tie 3 and 4 shown in Figure 2-2, connect sensor wires (Thermistor Wire Harness, A2L Sensor Wire Harness, EEV Wire Harness and Pressure sensor Wire Harness) with wire harnesses connectors connected to PCB as shown in Figure 2-3 and secure. Bundled wires after the installation with a Wire Tie according to the requirement of the wire lengths.
7. Re-install the access panels removed in Step 1 as shown in Figure 10.
8. As shown in Figure 8, two drain ports located at the bottom drain pan (horizontally oriented) are to be used for upflow and downflow applications and the two on the side drain pan (vertically oriented) are to be used when the unit is in horizontal right or left configuration. When the unit is in upflow or downflow configuration, the drain ports located on bottom drain pan must be plugged and vice versa. Drain ports located at lower elevation (closer to the ground) in either configuration must be connected to the main drain line and the higher is for the secondary drain line.

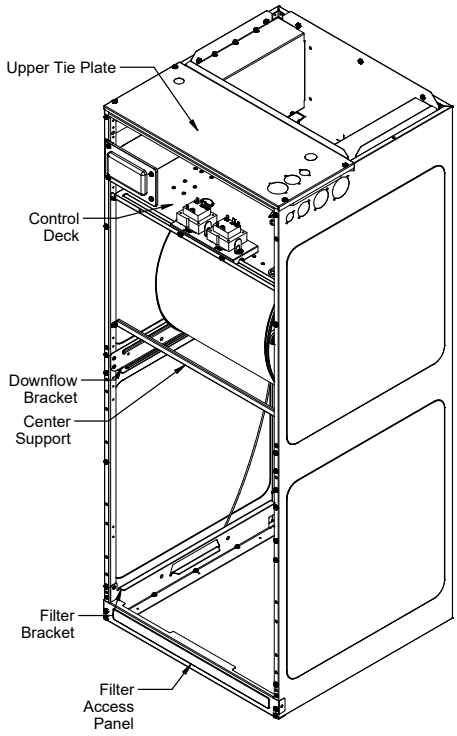

INTERNAL PART TERMINOLOGY
Figure 7

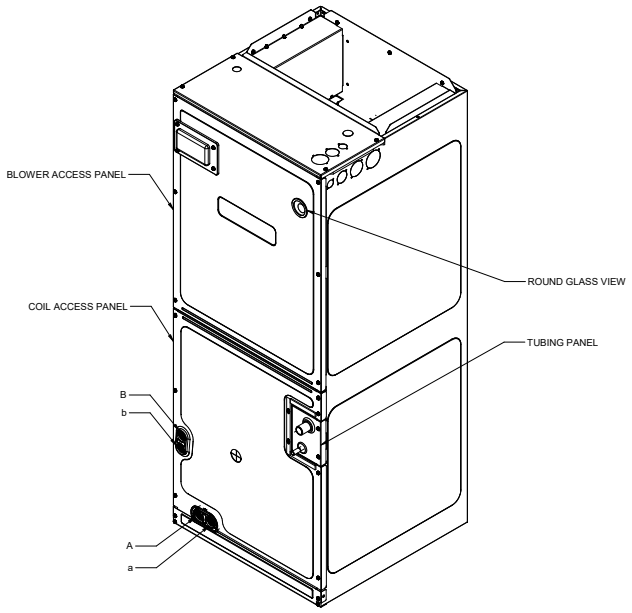

EXTERNAL PART TERMINOLOGY
FIGURE 8

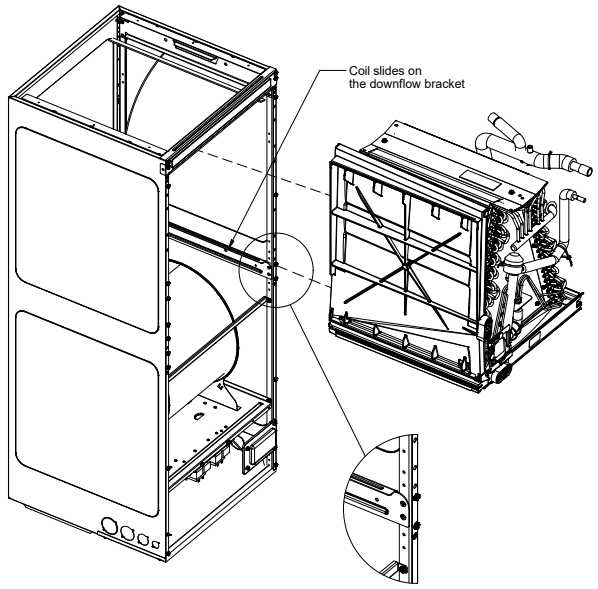

IMPORTANT NOTE:
Ensure coil slides on the rails along the groove provided on the drain pan side walls. Failure to do so will result in improper condensate drainage.

COIL INSTALLATION FOR DOWNFLOW
Figure 9

COIL INSTALLATION FOR DOWNFLOW
Figure 9

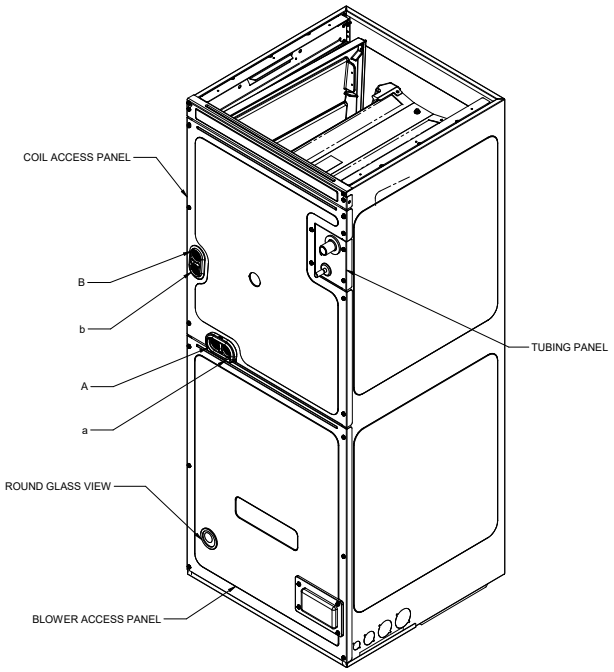

ACCESS PANEL CONFIGURATION FOR DOWNFLOW
OR HORIZONTAL RIGHT
FIGURE 10

6.3.1 Instruction To Relocate A2L Sensor Bracket Assembly From Downflow To Horizontal Right

1. Take off the coil access panel
2. Take off the drain port gaskets from Figure 1, drain port labeled (A) and (B) on main drain pan and side drain pan
3. Take off the A2L sensor bracket assembly as shown in Figure 1
4. Put A2L sensor bracket assembly to the side drain port correctly as shown in the figure 6. The “FRONT 0121A*****” print on sensor bracket should be in the front
5. Place gaskets back to the drain ports correctly. The “FRONT” print on the gaskets should be in the front.
6. Sensor wiring should be rerouted as shown in Figure 6.
7. Reassemble the blower access panel to the unit.

7 REFRIGERANT LINES

NOTE: Care should be taken to route refrigerant tubing in a way which allows adequate access for servicing and maintenance of the air handling unit.

WARNING

DO NOT USE MEANS TO ACCELERATE THE DEFROSTING PROCESS OR TO CLEAN, OTHER THAN THOSE RECOMMENDED BY THE MANUFACTURER.

THE APPLIANCE SHALL BE STORED IN A ROOM WITHOUT CONTINUOUSLY OPERATING IGNITION SOURCES (FOR EXAMPLE: OPEN FLAMES, AN OPERATING GAS APPLIANCE OR AN OPERATING ELECTRIC HEATER.) DO NOT PIERCE OR BURN. BE AWARE THAT REFRIGERANTS MAY NOT CONTAIN AN ODOR.

WARNING

This product is factory-shipped with dry nitrogen mixture gas under pressure. Use appropriate service tools and follow these instructions to prevent injury.

WARNING

A quenching cloth is strongly recommended to prevent scorching or marring of the equipment finish when brazing close to the painted surfaces. Use brazing alloy of 5% minimum silver content.

7.1 Tubing Size

For the correct tubing size, refer to the outdoor HEAT PUMP INSTALLATION & SERVICE REFERENCE.

7.2 Tubing Preparation

All cut ends are to be round, burr free, and clean. Failure to follow this practice increases the chances for refrigerant leaks. The suction line is spun closed and requires tubing cutters to remove the closed end.

WARNING

ONLY BRAZING TECHNIQUES AND APPROVED MECHANICAL JOINTS SHOULD BE USED TO CONNECT REFRIGERANT TUBING CONNECTIONS. NON-APPROVED MECHANICAL CONNECTORS AND OTHER METHODS ARE NOT PERMITTED IN THIS SYSTEM CONTAINING A2L REFRIGERANT. APPROVED MECHANICAL JOINTS WILL BE DETAILED IN THE PRODUCT'S SPECIFICATION SHEETS.

Braze joints should be made only with the connections provided external to the cabinet. Do not alter the cabinet nor braze inside the cabinet. To avoid overheating after brazing, quench all brazed joints with water or a wet rag.

Before breaking into the refrigerant circuit to make repairs – or for any other purpose – conventional procedures shall be used. Additionally, the following procedure shall be adhered to:

1. remove refrigerant;
2. purge the circuit with inert gas
3. evacuate
4. purge with inert gas
5. continuously flush or purge with inert gas when using flame to open circuit;
6. open the circuit by cutting or brazing.

The refrigerant charge shall be recovered into the correct recovery cylinders if venting is not allowed by local and national codes.

Ensure that the outlet for the vacuum pump is not close to any potential ignition sources and that ventilation is available.

CAUTION

Applying too much heat to any tube can melt the tube. Torch heat required to braze tubes of various sizes must be proportional to the size of the tube. Service personnel must use the appropriate heat level for the size of the tube being brazed.

NOTE: To prevent possible damage to the tubing joints, do not handle coil assembly with manifold or flowrator tubes. Always use clean gloves when handling coil assemblies.

7.3 Tubing Connections

EEV Series Air Handler models come with factory installed electronic expansion valve (EEV) pre-installed on the liquid tube.

1. Remove refrigerant tubing panel or coil (lower) access panel.
2. As shown in Figure 1, remove access valve fitting cap and depress the valve stem in access fitting to release pressure. No pressure indicates possible leak.
3. Replace the refrigerant tubing panel.
4. Remove the spin closure on both the liquid and suction tubes using a tubing cutter.
5. Insert liquid line set into liquid tube expansion and slide grommet about 18" away from braze joint.
6. Insert suction line set into suction tube expansion and slide insulation and grommet about 18" away from braze joint.
7. Braze joints. Quench all brazed joints with water or a wet rag upon completion of brazing.
8. Replace access panels, suction line grommet, insulation and all screws.
9. Ensure to replace and hand tighten the red valve on access fitting.

Installation of pipe-work must be kept to a minimum. Pipework including piping material, pipe routing and installation must be protected from physical damage and shall not be installed in an unventilated space. Equipment piping in any occupied space shall be installed in such a way to protect against accidental damage in operation and service. Precautions must be taken to avoid excessive vibration or pulsation to refrigeration piping. Protection devices, piping and fittings shall be protected as far as possible against adverse environmental effects, for example, the danger of water collecting and freezing in relief pipes or the accumulation of dirt and debris.

Follow standards related to ASHRAE 15, ASHRAE 15.2, IAPMO Uniform Mechanical Code, ICC International Mechanical Code or CSA B52 during any installation. Piping must be accessible for inspection prior to being covered or enclosed in compliance with national and local codes.

Flexible pipe elements must be protected against mechanical damage, excessive stress by torsion, or other forces. They should be checked for mechanical damage annually. The indoor equipment and pipes must be securely mounted and guarded such that accidental rupture of equipment cannot occur from such events as moving furniture or reconstruction activities. Field-made refrigerant joints indoors shall be tightness tested. The test method shall have a sensitivity of 5 grams per year of refrigerant or better under a pressure of at least 0.25 times the maximum allowable pressure. No leak shall be detected (Should be leak tight).
The indoor equipment and pipes must be securely mounted and guarded such that accidental rupture of equipment cannot occur from such events as moving furniture or reconstruction activities. Field-made refrigerant joints indoors shall be tightness tested.
Field pipework must be pressure tested with an inert gas and then vacuum tested prior to refrigerant charging according to the following requirements:

7.4 Standing Pressure Test (recommended before vacuum)

Pressurize the system to the maximum allowable pressure listed in the serial plate using dry nitrogen or dry helium. Allow the pressure to stabilize and hold for at least 15 minutes. The system is considered leak-free if the pressure does not drop below the selected maximum allowable pressure. If, after 15 minutes, the pressure drops, it implies a leak in the system. Proceed with identifying and sealing the leak and repeating the Standing Pressure Test. Proceed to system evacuation using the Deep Vacuum Method. Leak test the system using dry nitrogen or dry helium and soapy water to identify leaks. NO REFRIGERANT SHALL BE USED FOR PRESSURE TESTING TO DETECT LEAKS. Proceed to system evacuation using the Deep Vacuum Method.

7.5 Deep Vacuum Method

The Deep Vacuum Method requires a vacuum pump rated for 500 microns or less. This method effectively and efficiently ensures the system is free of non-condensable air and moisture. The Triple Evacuation Method is detailed in the Service Manual for this product model as an alternative. To expedite the evacuation procedure, it is recommended that the Schrader Cores be removed from the service valves using a core-removal tool.

1.Connect the vacuum pump, micron gauge, and vacuum-rated hoses to both service valves. Evacuation must use both service valves to eliminate system mechanical seals.
2.Evacuate the system to less than 500 microns.
3.Isolate the pump from the system and hold the vacuum for 10 minutes (minimum). Typically, pressure will rise slowly during this period. If the pressure rises to less than 1000 microns and remains steady, the system is considered leak-free; proceed to system charging and startup.
4.If pressure rises above 1000 microns but holds steady below 2000 microns, non-condensable air or moisture may remain, or a small leak may be present. Return to step 2: If the same result is achieved, check for leaks and repair. Repeat the evacuation procedure.
5.If pressure rises above 2000 microns, a leak is present. Check for leaks and repair them. Then, repeat the evacuation procedure.

NOTE: The use of a heat shield is strongly recommended when brazing to avoid burning the serial plate or the finish of the unit. Heat trap or wet rags must be used to protect heat sensitive components such as service valves, electronic expansion valve (EEV), thermistors, A2L sensor, and pressure sensors.

8 CONDENSATE DRAIN LINES

The coil drain pan has a primary and a secondary drain with ¾" NPT female connections. The connectors required are ¾" NPT male, either PVC or metal pipe, and should be hand tightened to a torque of no more than 37 in-lbs. to prevent damage to the drain pan connection. An insertion depth of approximately ⅜" to ½" (3-5 turns) should be expected at this torque.

1. Ensure drain pan hole is not obstructed.
2. To prevent potential sweating and dripping on to finished space, it may be necessary to insulate the condensate drain line located inside the building. Use Armaflex® or similar material.

A secondary condensate drain connection has been provided for areas where the building codes require it. Pitch all drain lines a minimum of ¼" per foot to provide free drainage. Provide required support to the drain line to prevent bowing. If the secondary drain line is required, run the line separately from the primary drain and end it where condensate discharge can be easily seen.

NOTE: Water coming from secondary line means the coil primary drain is plugged and needs immediate attention.

Insulate drain lines located inside the building or above a finished living space to prevent sweating. Install a condensate trap to ensure proper drainage.

NOTE: When units are installed above ceilings, or in other locations where damage from condensate overflow may occur, it is **MANDATORY** to install a field fabricated auxiliary drain pan under the coil cabinet enclosure.

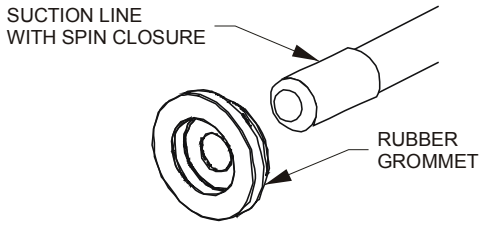

SUCTION LINE GROMMET
Figure 11

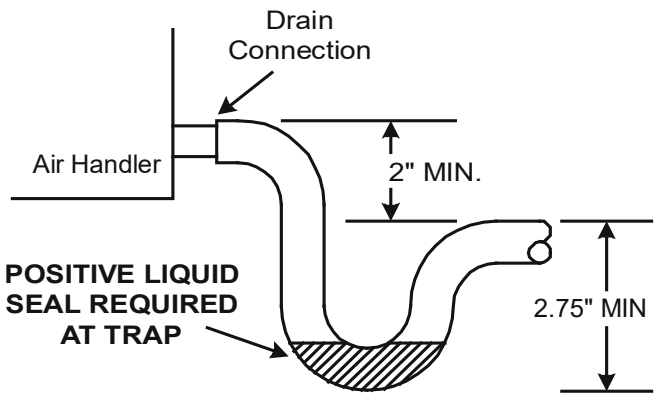

Figure 12

The installation must include a “P” style trap that is located as close as is practical to the indoor unit coil. See Figure 12 for details of a typical condensate line “P” trap.

NOTE: Units operating in high static pressure applications may require a deeper field constructed “P” style trap than is shown in Figure 12 to allow proper drainage and prevent condensate overflow.

NOTE: Trapped lines are required by many local codes. In the absence of any prevailing local codes, please refer to the requirements listed in the Uniform Mechanical Building Code.

A drain trap in a **draw-through** application prevents air from being drawn back through the drain line during fan operation thus preventing condensate from draining, and if connected to a sewer line to prevent sewer gases from being drawn into the airstream during blower operation.

Use of a condensate removal pump is permitted when necessary. This condensate pump should have provisions for shutting off the control voltage should a blocked drain occur. See Auxiliary Alarm Switch section for more details. A trap must be installed between the unit and the condensate pump.

IMPORTANT NOTE: The evaporator coil is fabricated with oils that may dissolve styrofoam and certain types of plastics. Therefore, a removal pump or float switch must not contain any of these materials.

9 DUCTWORK

CAUTION

Do not operate this product without all the ductwork attached.

This air handler is designed for a complete supply and return ductwork system.

To ensure correct system performance, the ductwork is to be sized to accommodate 350-450 CFM per ton of cooling with the static pressure not to exceed 0.9” in w.c. Refer to ACCA Manual D, Manual S and Manual RS for information on duct sizing and application. Flame retardant ductwork is to be used and sealed to the unit in a manner that will prevent leakage.

9.1 Return Ductwork

Instructions for wiring to external zoning dampers and/or mechanical ventilation, if required to ensure that upon detection of a leak, the zoning dampers are driven fully open and additional mechanical ventilation is activated.

For appliances using R-32 REFRIGERANTS, connected via an air duct system to one or more rooms, the supply and return air shall be directly ducted to the space.
For mechanical ventilation the air extraction opening from the room shall be located equal or below the refrigerant release point. For floor mounted units, it shall be as low as practicable. The air extraction openings shall be located in a sufficient distance from the air intake openings to prevent re-circulation to the space.

DO NOT LOCATE THE RETURN DUCTWORK IN AN AREA THAT CAN INTRODUCE TOXIC, OR OBJECTIONABLE FUMES/ODORS INTO THE DUCTWORK. The return ductwork is to be connected to the air handler bottom (upflow configuration).

10 RETURN AIR FILTERS

Each installation must include a return air filter. This filtering may be performed at the air handler using the factory filter rails or externally such as a return air filter grille. When using the factory filter rails, a nominal 16x20x1”, 20x20x1” or 24x20x1” (actual dimension must be less than 23-½”x20”) filter can be installed on a B, C and D cabinet respectively (the cabinet size is the seventh letter of the model number). Washable versions are available through your local distributor.

NOTE: If installing a filter, an external filter must be used when installing the unit in Horizontal Right (Figure 6), or if the side drain pan is not removed for Down Flow application. A filter will not fit on the internal filter rails in these applications.

IMPORTANT NOTE: If appliance is equipped with UVC coil and air purifier, turn off the appliance before opening filter access door panel to change and install filter.

11 ELECTRICAL AND CONTROL WIRING

IMPORTANT: All routing of electrical wiring must be made through provided electrical knockouts. When removing the electrical knockouts, take care not to damage the PCB. Do not cut, puncture or alter the cabinet for electrical wiring.

11.1 Building Electrical Inspection

This unit is designed for single-phase electrical supply only. DO NOT OPERATE AIR HANDLER ON A THREE-PHASE POWER SUPPLY. Measure the power supply to the unit. The supply voltage **must** be measured and be in agreement with the unit nameplate power requirements and within the range shown. Refer to Table 7

Nominal Input	Minimum Voltage	Maximum Voltage
115 VAC	103	126

ELECTRICAL VOLTAGE

Table 7

11.2 Wire Sizing

Wire size is important to the operation of your equipment. Use the following check list when selecting the appropriate wire size for your unit.

- **Wire used must be sized to carry the Minimum Circuit Ampacity (MCA) listed on the equipment's Rating Plate.**
- Refer to the NEC (USA) or CSA (Canada) for wire sizing. The unit MCA for the air handler and the optional electric heat kit can be found on the unit Series and Rating Plate.
- **Wire must be sized to allow no more than a 2% voltage drop from the building breaker/fuse panel to the unit.**
- Wires with different insulation temperature rating have varying ampacities - be sure to check the temperature rating used.
- Refer to the latest edition of the National Electric Code or in Canada the Canadian Electric Code when determining the correct wire size.

11.3 Maximum Overcurrent Protection (MOP)

Every installation must include an NEC (USA) or CEC (Canada) approved overcurrent protection device. Also, check with local or state codes for any special regional requirements. Protection can be in the form of fusing or HACR style circuit breakers. The Serial and Rating Plate provides the maximum overcurrent device permissible.

NOTE: Fuses or circuit breakers are to be sized larger than the equipment MCA but not to exceed the MOP.

11.4 Electrical Connections – Supply Voltage

IMPORTANT NOTE: USE COPPER CONDUCTORS ONLY.

Knockouts are provided on the air handler top panel and sides of the cabinet to allow for the entry of the supply voltage conductors, as shown in Figure 13. Separate knock-outs must be used for two circuit Heat-kits. If the knockouts on the cabinet sides are used for electrical conduit, an adapter ring must be used in order to meet UL 60335-2-40 safety requirements. An NEC or CEC approved strain relief is to be used at this entry point. Some codes/municipalities require the supply wire to be enclosed in conduit. Consult your local codes.

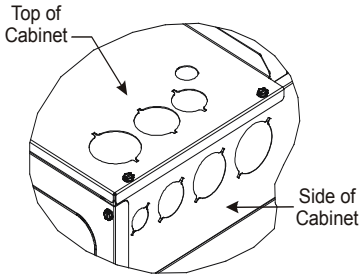

KNOCK-OUT FOR ELECTRICAL CONNECTIONS
Figure 13

11.4.1 Air Handler Only

IMPORTANT: Installation of Air Handler must follow any local codes/regulations. The manufacture recommends a field supplied disconnect switch or breaker must be installed in the electrical circuit that will allow power to be shut-off for service or maintenance.

The power supply connects to the stripped black and red wires contained in the air handler electrical compartment. Attach the supply wires to the air handler conductors as shown in the unit wiring diagram using appropriately sized solderless connectors or other NEC or CEC approved means. A ground lug is also provided in the electrical compartment. The ground wire from the power supply must be connected to this ground lug.

CAUTION

FIRE HAZARD! To avoid the risk of property damage, personal injury or fire, use only copper conductors.

WARNING

HIGH VOLTAGE
Disconnect all power before servicing or installing this unit. Multiple power sources may be present. Failure to do so may cause property damage, personal injury or death.

WARNING

High Voltage!
To avoid property damage, personal injury or death due to electrical shock, this unit MUST have an uninterrupted, unbroken electrical ground. The electrical ground circuit may consist of an appropriately sized electrical wire connecting the ground lug in the unit control box to the building electrical service panel.
Other methods of grounding are permitted if performed in accordance with the National Electric Code (NEC)/American National Standards Institute (ANSI)/National Fire Protection Association (NFPA) 70 and local/state codes. In Canada, electrical grounding is to be in accordance with the Canadian Electric Code (CSA) C22.1.

11.5 Low Voltage Connections

Use N.E.C Class 2 Copper conductor wire. The 24V-control voltage connects the air handler to the room thermostat and outdoor unit. Typical 18 AWG thermostat wire may be used to wire the system components. Two hundred fifty (250) feet is the maximum allowable length of wire between the indoor unit and outdoor unit, and one hundred twenty five (125) feet between indoor unit and thermostat is the maximum allowable length of wire. Low voltage wiring must be connected through the top of the cabinet or either side. See the “Thermostat Wiring” section of this manual for typical low voltage wiring connections.

12 ACHIEVING 1.4% AND 2.0% AIRFLOW LOW LEAKAGE RATE

Ensure all the gaskets remain intact on all surfaces as shipped with the unit. These surfaces are areas between the upper tie plate and coil access panel, blower access and coil access panels, and between the coil access and filter access panels. Ensure upon installation, that the plastic breaker cover is sitting flush on the blower access panel and all access panels are flush with each other and the cabinet. With these requirements satisfied, the unit achieves less than 1.4% airflow leakage @ 0.5 inch wc static pressure and less than 2% airflow leakage @1inch wc static pressure when tested in accordance with ASHRAE Standard 193.

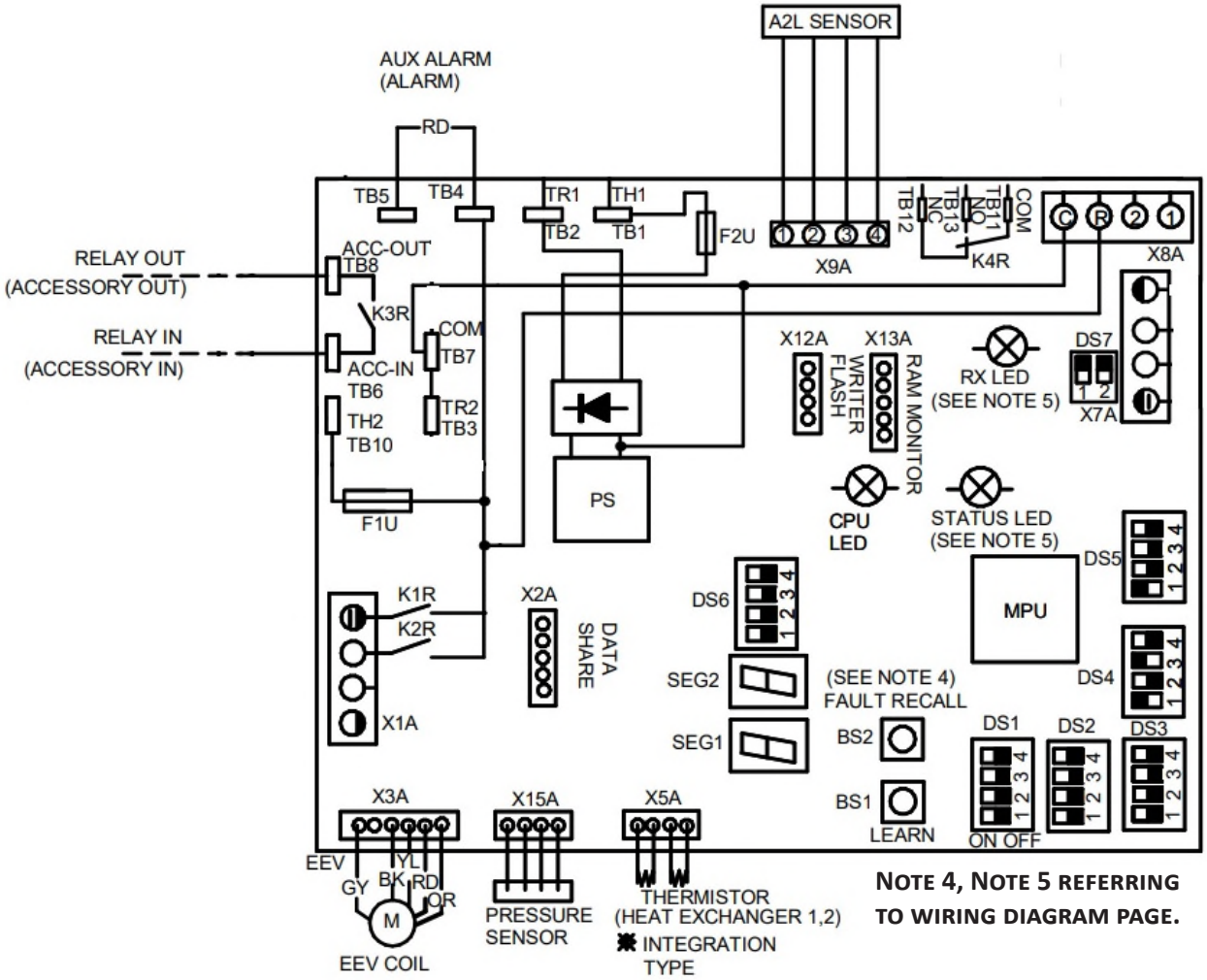

Note 4, Note 5 referring to wiring diagram page.

Indoor Unit Communicating Board (PCB)

Figure 14

13 AIRFLOW TRIM

Indoor airflow can be trimmed up/down through the outdoor unit user menu. For more detailed information, please refer to the outdoor unit installation manual.

- To prevent condensation blow off, positive side trim settings are allowed within the Maximum CFM listed below. (refer to Table 8) The CFM in this table intends actual measured value at installation site. Do not refer to the CFM value in the outdoor spec sheet, displayed in status menu of communication thermostat, or the displayed LEDs on the PCB, as there may be a tolerance difference between displayed and actual measured.

Maximum Measured CFM Allowed			
	Up-Flow	Down-Flow	HZ-Flow
AHVE24BP0300	910	870	870
AHVE36CP0300	1450	1390	1390
AHVE42CP0300	1520	1450	1450
AHVE48CP0300	1590	1520	1500
AHVE48DP0300	1590	1520	1520
AHVE60DP0300	1890	1800	1800

Table 8

14 MISCELLANEOUS START-UP CHECKLIST

- Prior to start-up, ensure that all electrical wires are properly sized and all connections are properly tightened.
- All panels must be in place and secured. For Air Tight application, gasket must be positioned at prescribed locations to achieve 2% leakage.
- Tubing must be leak free.
- Condensate line must be trapped and pitched to allow for drainage.
- Auxiliary drain is installed when necessary and pitched to allow for drainage.
- Low voltage wiring is properly connected.
- Unit is protected from vehicular or other physical damage.
- Return air is not obtained from, nor are there any return air duct joints that are unsealed in, areas where there may be objectionable odors, flammable vapors or products of combustion such as carbon monoxide (CO), which may cause serious personal injury or death.

IMPORTANT NOTE: If thumb screws are used to access the filter, ensure the washer installed on the screw behind the access panel remains in place after re-installation.

NOTE: A removable plug connector is provided with the control to make thermostat wire connections. This plug may be removed, wire connections made to the plug, and replaced. It is STRONGLY recommended that you do not connect multiple wires into a single terminal. Wire nuts are recommended to ensure one wire is used for each terminal. Failure to do so may result in intermittent operation.

14.1 Auxiliary Alarm Switch

The control is equipped with two Auxiliary Alarm terminals, labeled TB4 and TB5 which are typically utilized in series with a condensate switch but could also be used with compatible CO sensors or fire alarms.

The auxiliary alarm switch must be normally closed and open when the alarm occurs. For example, a normally closed condensate switch will open when the base pan's water level reaches a particular level. The control will respond by turning off the blower motor and outdoor unit and displaying the proper fault codes. If the switch is later detected closed for 30 seconds, normal operation resumes and the error message is removed. (The switch is closed as part of the default factory setting.) The error will be maintained in the equipment's fault history. See Figures 14 and 15 for the connection location.

IMPORTANT NOTE: If any of the refrigerant leak detection related error codes (A0/AF/A1) are detected at the same time, the action taken when the leak detection error is detected (fan on and relay K4R energized) takes priority.

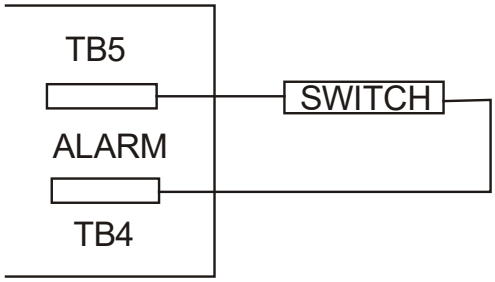

Figure 15

14.2 Circulator Blower

This air handler is equipped with a variable speed circulator blower. This blower provides several automatically-adjusted blower speeds.

CAUTION

Do not change any dip switches. For default settings see figure 14.

14.3 Motor Orientation

If the unit is in the upflow position, there is no need to rotate the motor. If the unit is in the downflow position, loosen motor mount and rotate motor as shown in the *Motor Orientation,* Figure 16. Be sure motor is oriented with the female connections on the casing down. If the motor is not oriented with the connections down, water could collect in the motor and may cause premature failure.

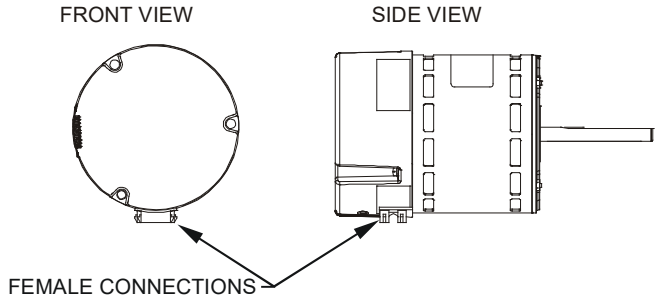

Motor Orientation
Figure 16

14.4 Accessory Contacts

WARNING

ALL ACCESSORIES THAT MAY BECOME A POTENTIAL IGNITION SOURCE IF INSTALLED, SUCH AS ELECTRONIC AIR CLEANERS, MUST ONLY BE POWERED THROUGH OUR ACCESSORY CONTROL BOARD KIT. IF AN ELECTRONIC AIR CLEANER IS ALREADY INSTALLED IN THE DUCT WORK AND NOT CONNECTED TO THE ACCESSORY CONTROL BOARD, IT WILL HAVE TO BE DISABLED OR REMOVED.
ENSURE THAT ANY ADDITIONAL WIRING FROM THE INDOOR UNIT TO THE ACCESSORY CONTROL BOARD IS ROUTED AND PROTECTED FROM DAMAGE AND WEAR, AVOIDING THE FLUE PIPE AND ANY JOINTS THAT MAY NEED BRAZED OR DISCONNECTED FOR SERVICE. REFER TO THE PRODUCT SPECIFICATION SHEET FOR THE ACCESSORY CONTROL BOARD KIT PART NUMBER

The control is equipped with an Accessory Relay and a pair of ¼ inch accessory terminals which is normally open, labeled ACC-IN [TB6] and ACC-OUT [TB8]. (This is a Dry contact. See accessory contacts graphic).

The Accessory Relay can be configured to close with humidification functionality or to close anytime the blower is running. A closed relay means the two terminals will have continuity between them. (The control does not provide power to these contacts).

This setting can be made in the “3. Equipment setup menu” of the Amana Brand Smart.

“3. Equipment Set up -> Air handler-> Humidifier relay”

For the setup for humidification functionality, the accessory terminals have 3 operational modes.

1. **humidifier-> humidification mode**
   1-1: off
   Contact (relay) never closes
   1-2: on
   The contact (relay) closes when,
   [humidification demand: on] and **[heating demand: on]** and **[blower motor; on]**
   1-3: independent
   The contact (relay) close when,
   [humidification demand; on] and **[blower motor; on]**
2. **enable with blower**
   Contact (relay) closes when,
   [blower motor; on]
3. **non (factory setting)**
   Contact (relay) never closes

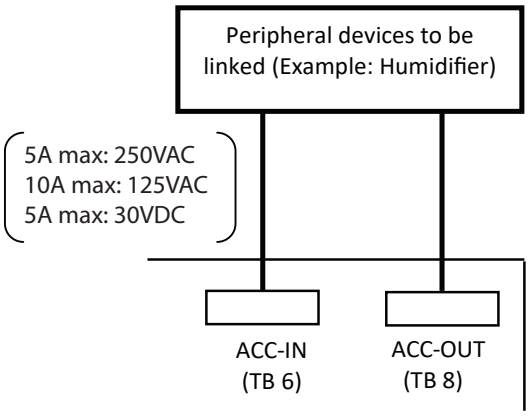

ACCESSORY CONTACTS
Figure 17

14.5 Leak Detection Output (Relay K4R)

The control board is equipped with three Refrigerant Leak Detection 1/4 inch quick connect terminals, labeled TB11, TB12 and TB13 that are used for the control of optional kits (zoning damper, UV light, ventilator). When a refrigerant leak is detected, as indicated by error codes A0, A1 or AF, relay K4R is activated by the control. See the table 9 for the conditions of relay K4R when the error code is issued. When refrigerant leak alarm is issued, dampers must be fully open, UV light must be turned off and accessory ventilation fans must be activated. See the table 10 for the specification for relay K4R and Figures 14 and 18 for the terminals’ location.

Items Connections	Error Code A0/A1/AF not issued	Error Code A0/A1/AF issued
TB11 (COM) / TB12 (NC)	CLOSED	OPEN
TB11 (COM) / TB13 (NO)	OPEN	CLOSED

Relay K4R when A0/A1/AF is issued
Table 10

Contact types	1 Form C, Dry contact
Contact rating (resistive)	Form A contact (TB11-13):
	10 A 125 V AC, 5 A 250 V AC
	Form B contact (TB11-12):
	3 A 125 V AC, 2 A 250 V AC
Max. switching power (resistive)	Form A contact (TB11-13):
	1,250 VA, 150 W
	Form B contact (TB11-12):
	500 VA, 30 W
Max. switching current	Form A contact (TB11-13):
	10 A (125 V AC)
	Form B contact (TB11-12):
	3 A (125 V AC)

Relay K4R Specifications
Table 9

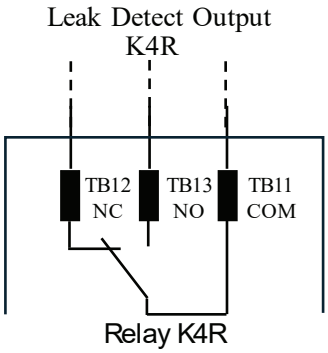

Figure 18

15 TROUBLESHOOTING

15.1 Electrostatic Discharge (ESD) Precautions

NOTE: Discharge body's static electricity before touching unit. An electrostatic discharge can adversely affect electrical components.

Use the following precautions during air handler installation and servicing to protect the integrated control module from damage. By putting the air handler, the control, and the person at the same electrostatic potential, these steps will help avoid exposing the integrated control module to electrostatic discharge. This procedure is applicable to both installed and uninstalled (ungrounded) blowers.

1. Disconnect all power to the blower. Do not touch the integrated control module or any wire connected to the control prior to discharging your body's electrostatic charge to ground.
2. Firmly touch a clean, unpainted, metal surface of the air handler blower near the control. Any tools held in a person's hand during grounding will be discharged.
3. Service integrated control module or connecting wiring following the discharge process in step 2. Use caution not to recharge your body with static electricity; (i.e., do not move or shuffle your feet, do not touch ungrounded objects, etc.). If you come in contact with an ungrounded object, repeat step 2 before touching control or wires.
4. Discharge your body to ground before removing a new control from its container. Follow steps 1 through 3 if installing the control on a blower. Return any old or new controls to their containers before touching any ungrounded object.

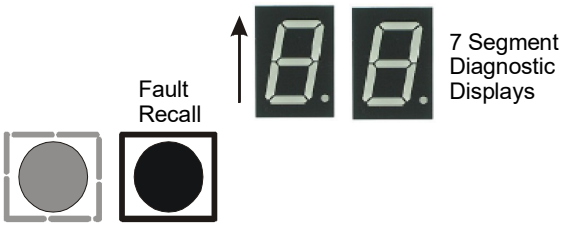

Figure 19

15.2 Diagnostic Chart

Refer to the *Troubleshooting Chart* at the end of this manual for assistance in determining the source of unit operational problems. The 7 segment LED display will provide any active fault codes.

15.3 Fault Recall

The integrated control module is equipped with a momentary push-button switch that can be used to display the last six faults on the 7 segment LED display. Follow the sequence to use the feature. The control must be in Standby Mode (no thermostat inputs).

1. Press FAULT RECALL button for 2 to 5 seconds*, so that 7 segment display shows "- -".
2. Release FAULT RECALL button in this period, 7 segment display shows the most recent fault.
3. Each time FAULT RECALL button is pressed after that**, 7 segment display outputs next occurred fault.
4. After displaying the series of recent faults, 7 segment displays blink "- -" and goes back to Standby Mode.

To clear the error code history:

1. Press FAULT RECALL button for 10 to 15 seconds***, so that 7 segment displays blink "- -".
2. Release FAULT RECALL button in this period, 7 segment displays show "88" and faults are cleared.

NOTE:

* If FAULT RECALL button is not pressed long enough (for 2 to 5 seconds), control goes back to Standby Mode.

If the FAULT RECALL button is pressed for 5 to 10 seconds, control goes back to Standby Mode.

** Consecutively repeated faults are displayed a maximum of three times.

*** If FAULT RECALL button is pressed for longer than 15 seconds, control goes back to Standby Mode.

16 FULLY COMMUNICATING AMANA® BRAND SYSTEM

NOTE: For a detailed procedure of thermostat commissioning process, please visit the Amana Brand Smart Thermostat website at http://www.amana-hac.com/.

16.1 Overview

A fully communicating Amana Brand system is a system that includes a compatible air handler and heat pump with a communicating thermostat.

The Air Handler (AHVE*115V) can be connected to HP. A fully communicating Amana Brand heating/air conditioning system differs from a non-communicating/traditional system in the manner in which the indoor unit, outdoor unit and thermostat interact with one another. In a traditional system, the thermostat sends commands to the indoor and outdoor units via analog 24 VAC signals. It is a one-way communication path. The indoor and outdoor units typically do not return information to the thermostat.

For a fully communicating Amana Brand system, the indoor unit, outdoor unit, and thermostat "communicate" digitally with one another. It is now a two-way communications path. The thermostat still sends commands to the indoor and outdoor units and may also request and receive information from both the indoor and outdoor units. This information may be displayed on the communicating thermostat. The indoor and outdoor units also interact with one another. The outdoor unit may send commands to or request information from the indoor unit. This two-way digital communications between the thermostat and subsystems (indoor/outdoor unit) is the key to unlocking the benefits and features of the fully communicating Amana Brand system.

Two-way digital communications is accomplished using only two wires. The thermostat and air handler controls are powered with 24 VAC. A maximum of 4 wires between the air handler and thermostat is required to operate the system. An inverter equipped outdoor unit does not require 24 VAC. Only the 2 digital communication wires are required between the air handler and inverter unit (pins 1 and 2 on the thermostat connector.)

16.2 Airflow Consideration

Airflow demands are managed differently in a fully communicating system than in a non-communicating wired system. The system operating mode (as determined by the thermostat) determines which unit calculates the system airflow demand. If the indoor unit is responsible for determining the airflow demand, it calculates the demand and sends it to the ECM motor. If the outdoor unit or thermostat is responsible for determining the demand, it calculates the demand and transmits the demand along with a fan request to the indoor unit. The indoor unit then sends the demand to the ECM motor. Table 11 lists the various fully communicating Amana brand systems, the operating mode, and airflow demand source.

For example, assume the system is a heat pump matched with an air handler. With a call for low stage cooling, the heat pump will calculate the system's low stage cooling airflow demand. The heat pump will then send a fan request along with the low stage cooling airflow demand to the air handler. Once received, the air handler will send the low stage cooling airflow demand to the ECM motor. The ECM motor then delivers the low stage cooling airflow. See the applicable fully communicating Amana brand System air conditioner or heat pump installation manual for the airflow delivered during cooling or heat pump heating.

In continuous fan mode, the communicating thermostat provides the airflow demand. The communicating thermostat provides 4 continuous fan speeds (25%, 50%, 75% and 100% of maximum airflow). During continuous fan operation, the thermostat sends a fan request along with the continuous fan demand to the air handler. The air handler, in turn, sends the demand to the ECM motor. The ECM motor delivers the requested continuous fan airflow.

16.3 Thermostat Wiring

NOTE: Refer to section Electrical Connections for 208/230 volt line connections to the air handler.

NOTE: It is **STRONGLY** recommended that no more than two wires be connected in a single terminal. If two wires are used in a terminal, it is recommended the same type of wire be used (i.e. Both stranded or solid for secure connection). Failure to do so may result in intermittent operation.

Typical 18 AWG thermostat wire may be used to wire the system components. Two hundred fifty (250) feet is the maximum of wire between indoor unit and outdoor unit, and one hundred twenty five (125) feet between indoor unit and thermostat.

16.3.1 Two-Wire Outdoor and Four-Wire Indoor Wiring

Typical wiring will consist of two wires between the indoor unit and outdoor unit and four wires between the indoor unit and thermostat. Figure 20 shows the required wires are: data lines, 1 and 2; "R" (24 VAC hot) and "C" (24 VAC common).

16.4 Network Troubleshooting

Occasionally the need to troubleshoot the network may arise. The integrated air handler control has some on-board tools that can be used to troubleshoot the network. These tools are: red communications LED, green receive (Rx) LED, and the learn button. Refer to the Communications Troubleshooting Chart at the end of this manual for error codes, possible causes and corrective actions

- Red communications LED – Indicates the status of the network. The Communications Troubleshooting Chart on the following page indicates the LED status and the corresponding potential problem.
- Green receive LED – Indicates network traffic. The following table indicates the LED status and the corresponding potential problem.

- Learn button – Used to reset the network. Depress the button for approximately 2 seconds to reset the network.

16.5 System Troubleshooting

NOTE: Refer to the instructions accompanying the Communicating compatible outdoor HP unit for unit specific troubleshooting information. Refer to the *Troubleshooting Chart* at the end of this manual for a listing of possible air handler error codes, possible causes and corrective actions.

ATTENTION INSTALLER - IMPORTANT NOTICE!

Please read carefully before installing this unit.

- Power line terminal #C from Indoor unit must connect to terminal #C on thermostat and power line terminal #R from indoor unit must connect to terminal #R on thermostat. Verify wires are not reversed.
  (**Note**: The order of the terminals of the indoor unit and the Amana Brand Smart thermostat may be different.)
- Do not attach any wires to the R & C Terminals on the HP, as they are not needed for inverter unit.
- Data line terminal #1 from HP must connect to terminal #1 on indoor unit and thermostat and data line terminal #2 from HP must connect to terminal #2 on indoor unit and thermostat. Verify wires are not reversed.

System	System Operating Mode	Airflow Demand Source
Heat Pump + Air Handler	Cooling	Heat Pump
	Heat Pump Heating Only	Heat Pump
	Continuous Fan	Thermostat

Table 11

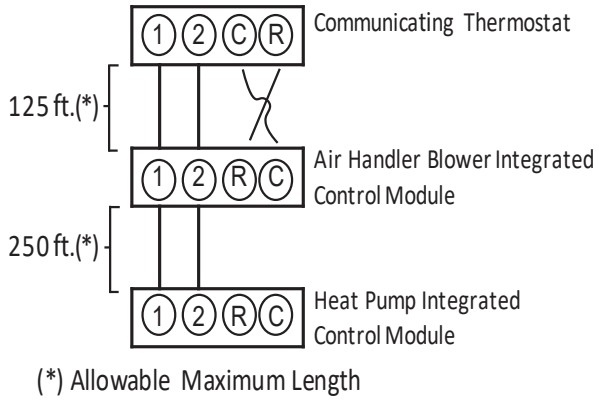

SYSTEM WIRING
Figure 20

16.6 Refrigeration Detection System (RDS)

Function: Refrigerant Detection System (RDS) is installed in this equipment to detect any R-32 leakage in the coil and take action to mitigate any risk of ignition/ fire.

Operation: When there is a leak detected, the RDS shall send signals for the unit to perform these actions:

1. Turn on the blower to circulate air with Mitigation CFM
2. Switch off electric heater
3. Error code A0 issued
4. Fully open damper (*1)
5. Switch off UV light (*1)

(*1) If the damper and/or UV lamp are installed in the field, be sure to use the “15.5 Leak detection output” function and construct the wiring so that they will activate as mentioned above when a leak is detected.

Servicing: Before servicing identify the Mode of operation of the system by reading the 7-Segment Display on the PCB which can be seen through the round glass view on top access panel and matching the 7-Segment Display with mode of operation in Diagnostic label which is attached on the Blower access panel. After identifying the mode of operation take recommended actions as specified in Table DIAGNOSTIC CODES.

Serial Plate Information: The installer must write the system charge used on installation on the serial plate under the maximum possible refrigerant charge field. Consult table 1 to determine minimum air conditioned room area required for the system charge used. If installation is not at sea level, consult table 2 to determine how to adjust the minimum air conditioned room area. Write the minimum air conditioned room area on the serial plate under the minimum room area field. Use a durable marking instrument to write the values on the serial plate.

Instruction to replace PCB: Take off the blower access panel, disconnect the PCB harness and A2L sensor wire connected to the PCB, detach the PCB from the 4 plastic standoffs, install new PCB on 4 plastic standoffs which is installed on metal bracket, re-connect the PCB harness and A2L sensor wire to the new PCB per wiring instruction as attached to the equipment, reassemble the blower access panel to the unit.

Instruction to replace A2L sensor: Take off the blower access panel and coil access panel, take off the drain port gasket on the drain pan in front of the sensor bracket, disconnect the A2L sensor wire from the PCB, take off sensor bracket assembly from the drain pan, remove plastic push pins and A2L sensor off the sensor bracket, install new A2L sensor and plastic push pins to sensor bracket, re-install A2L sensor bracket assembly to the drain port correctly as shown in the figures 3, 4, 5 and 6. The “FRONT 0121A*****” print on sensor bracket should be facing away from the equipment, place gaskets back to the drain ports correctly. The “FRONT” print on the gaskets should be in the front facing away from the equipment, reassemble the blower access panel and coil access panel to the unit.

	service indicator; read technical manual
	operator's manual; operating instructions
	warning; low Flammable materials
	UN GHS flame symbol

Marking Symbol Table

Mitigation CFM: When one of the error codes A0/A1/AF that is related to refrigerant leak detection system is issued, the blower is activated with the mitigation CFM shown in Table 1.

16.7 Refrigerant Leak Test

Conduct Refrigerant Leak Test to check that the refrigerant leak detection system works when a damper and/or UV light are installed. To start Refrigerant Leak Test, go to “Refrigerant Leak Detection” menu under “4 System Optimization” on the thermostat’s commissioning menu. Switch “Refrigerant leak test” setting to “Run test” to start the refrigerant leak test. When the unit goes into Refrigerant Leak Test, the message will be displayed on the thermostat to inform that it’s in testing mode. Check the refrigerant leak detection actions work properly (the blower runs, the zoning damper fully opens, and the UV light is switched off.) After confirming these actions, change the setting for “Refrigerant leak test” to “Stop” to finish the test.

Note: The refrigerant leak test is automatic after 1 hour, even if you do not set it to “stop”

Error Code	PCB LED Display	Description	Possible Causes	Corrective Actions
EE	No display (EE display is EMG mode)	• No power supply to ID blower / no 24 volt power to PCB • Blown fuse or circuit breaker • PCB has an internal fault	• Manual disconnect switch OFF • No power supply to ID blower / no 24 volt power to PCB • Blown fuse or faulty circuit breaker • Control board has internal fault	• Assure 115 volt and 24 volt power to blower and control board. • Check fuse F2U on control board • Check for possible short in 115 volt and 24 volt circuits. Repair as necessary. • Replace the control board.
Eb	E_Eb	Selecting "no heater kit" and receiving electric heat demand	• This air handler is set for heating operation using the heater kit even though it is not compatible with the heater kits.	• Make sure to set "Backup Defrost heat" to "always OFF" (OD Setting). • Set all dip switches from S9-S12 in OFF condition (ID Setting). • Set Heating emergency mode to "OFF" (ID Setting).
E5	E_E5	Fuse Open	• Fuse (F1U) is blown • Connector TB10 is open	• Replace fuse • Check wiring to AUX alarm, communication connection. • Replace the control board *After recovering the system, E5 will still be displayed on the indoor PCB (about 30 seconds). BLOWN FUSE will still be displayed on the thermostat within 45 seconds. They will be cleared automatically.*
EF	E_EF	Auxiliary Switch Open	• High water level in the evaporation coil • The connected alarm device is activated • Auxiliary Alarm terminals (TB4, TB5) are open	• Check water level in drain pan • Check alarm device. • Close Auxiliary terminals TB4 and TB5 if not used *After recovering the system, EF will still be displayed on the indoor PCB (about 30 seconds). AUXILIARY CONTACTS OPEN will still be displayed on the thermostat within 45 seconds. They will be cleared automatically.*
d0	E_d0	Data not on Network	• No shared data on the network	• Populate shared data set using memory card.
d1	E_d1	Invalid Data on Network	• Wrong shared data on the network	• Populate shared data set using memory card.
d4	E_d4	Invalid Memory Card Data	• Wrong memory card data	• Replace circuit board • Rewrite data using the correct memory card
b0	E_b0	Blower Motor not running	• Fan/motor obstruction • Power interruption (low voltage) • Incorrect / loose wiring	• Check for obstruction on the fan/motor • Verify the input voltage at the motor • Check wiring or tighten wiring connections if needed • Replace circuit board or motor
b1	E_b1	Blower Motor Communication error	• Incorrect / loose wiring • Power interruption (low voltage)	• Check wiring or tighten wiring connections if needed • Verify the input voltage at the motor • Replace circuit board or motor
b2	E_b2	Blower Motor HP Mismatch	• Incorrect size motor • Invalid shared data	• Correct motor installation • Populate shared data set using memory card.
b3	E_b3	Blower Motor operating in Power, Temp or Speed Limiting conditions	• Fan/motor obstruction or blocked filters • Power interruption (low voltage) • Incorrect wiring • Blockage in the airflow (ductwork) or ductwork undersized	• Check for obstruction on the fan/motor/ductwork, clean filters • Verify the input voltage at the motor • Check wiring • Replace motor

Error Code	PCB LED Display	Description	Possible Causes	Corrective Actions
b9	E_b9	Low Indoor Airflow (without Electric Heat mode)	• Fan/motor obstruction or blocked filters • Restrictive ductwork or ductwork undersized • Wiring disconnected • Wrong outdoor/indoor combination • ID motor failure	• Check for obstruction on the fan/motor • Check ductwork/filter for blockage, clean filters • Remove obstruction. Verify all registers are fully open • Check the connections and the rotation of the motor • Verify the input voltage at the motor • Verify ductwork is appropriately sized for system. Resize/replace ductwork if needed • Replace motor
9b	E_9b	Low Indoor Airflow (with Electric Heat mode)	• Fan/motor obstruction or blocked filters • Restrictive ductwork or ductwork undersized • ID motor failure • Wiring disconnected	• Check for obstruction on the fan/motor • Check ductwork/filter for blockage, clean filters • Remove obstruction. Verify all registers are fully open • Check the connections and the rotation of the motor • Verify the input voltage at the motor • Verify ductwork is appropriately sized for system. Resize/replace ductwork if needed • Replace motor
70	E_70	EEV disconnection detected	• Indoor EEV coil not connected • Incorrect wiring to EEV	• Check Indoor EEV coil connection (PCB and junction connector) • Replace EEV coil • Check the resistance value of EEV coil (refer service manual) • Replace the control board
73	E_73	Liquid side thermistor abnormality	• Open (or) short circuit of the liquid thermistor (X5A) • Liquid thermistor reading incorrect or values outside the normal range	• Check the connection to liquid thermistor (PCB and junction connector) • Check the resistance value of the thermistor (refer service manual) • Replace thermistor • Replace the control board
74	E_74	Gas side thermistor abnormality	• Open (or) short circuit of the gas thermistor (X5A) • Gas thermistor reading incorrect or values outside the normal range	• Check the connection to gas thermistor (PCB and junction connector) • Check the resistance value of the thermistor (refer service manual) • Replace thermistor • Replace the control board
75	E_75	Pressure sensor abnormality	• Open (or) short circuit of the Pressure sensor (X15A) • Pressure sensor reading incorrect or values outside the normal range	• Check the connection to pressure sensor (PCB and junction connector) • Check the output voltage of the pressure sensor (refer service manual) • Replace pressure sensor • Replace the control board
77	E_77	Indoor Unit - Thermostat communication error (start-up & during operation)	• Incorrect wiring between ID unit and thermostat. *The system may have the communication error without error code 77 on the indoor PCB. Follow section 17.5 SYSTEM TROUBLESHOOTING* • Thermostat failure • Power interruption (low voltage)	• Check for thermostat and indoor unit wiring • Verify the input voltage at the ID unit and thermostat *After recovering the system with power supply, TSTAT ID NO COM will continue to be displayed on the thermostat within 2 minutes. The error code will be cleared automatically.* • Replace control board or thermostat • Press "LEARN" button on PCB for more than 5 seconds to reestablish network
A0	E_A0	Refrigerant Leak Alarm	• Refrigerant Leak • A2L sensor failure	• Ventilate the room before conducting any actions • Check coil leakage • Remove refrigerant from system and replace coil
AF	E_AF	A2L Sensor Communication Error	• A2L sensor not connected • Incorrect wiring of A2L sensor	• Check the connection of A2L sensor • Replace A2L sensor
A1	E_A1	A2L Sensor Internal Alarm	• A2L sensor failure	• Replace A2L sensor • Replace control board

NETWORK TROUBLESHOOTING

If a network communication error code has occurred, use the following steps to help troubleshoot the system. (For network communication error codes, refer to the table below and the tables of error codes for outdoor unit and indoor unit.)

After any wiring changes have been made or the dip switches of DS1 on the outdoor control board and/or DS 7 on the indoor unit control board have been changed, apply power to the system and see if the error codes have cleared.

1. Confirm low voltage wiring is correct per installation instructions. Check for miswiring. (i.e. Terminal 1 and 2 is reversed.)

NOTE: A removable plug connector is provided with the control to make thermostat wire connections. This plug may be removed, wire connections made to the plug, and replaced. It is strongly recommended that you do not connect more than two wires into a single terminal in the field because there is a risk of the wires becoming loose, which may result in intermittent operation.

2. Check wires for damage. (i.e. Broken wire at terminal, broken inside wire nuts or damaged cable between units.)
3. Perform continuity check on wires to make sure cable is OK. Replace the cable if necessary.
4. Change both dip switch 1 and 2 of DS1 on the outdoor unit control board. In case the indoor unit control board has DS7, refer to the following table 12. Try the combinations of dip switches for DS1 and DS7 on the outdoor and indoor unit control board, respectively, one by one. Check that any combinations clear the communication error. These dip switches change the termination resistance value of the communication circuit.

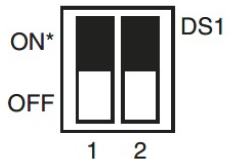

Outdoor unit DS1

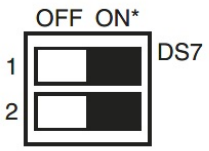

Indoor unit DS7

(*)Default factory setting.

Dip Switch Setting Combinations

Setting Combinations	DS1 on the outdoor unit control board	DS7 on the indoor unit control board
1*	(both) ON	(both)ON
2	(both) OFF	(both) ON
3	(both) ON	(both) OFF
4	(both) OFF	(both) OFF

(*) Default factory setting

Table 12

The integrated control module has some onboard tools that can be used to troubleshoot the network. Refer to Table 13 These tools are: red communications LED, green receive (Rx) LED, and the learn button.

- Red communications LED – Indicates the status of the network. The table below indicates the LED status and the corresponding potential problem.
- Green receive LED – Indicates network traffic. The table below indicates the LED status and the corresponding potential problem.
- LEARN button – Used to reset the network. Press the button for approximately 5 seconds to reset the network

LED COLOR	LED Status	Indication	Probable Causes	Corrective Actions
Red Communications LED (H2P)	OFF	Normal condition	• None	• None
	1 Flash	Communication failure	• Unknown packet is received • Communications failure	• Depress learn button • Verify wiring connection
	2 Flash	Out-of-box reset	• Control power up • Learn button depressed	• None
Green Receive LED (H3P)	OFF	No power Communications error	• No power to unit • Open fuse • Communication error	• Check circuits breakers and fuses; Reset/Replace if needed • Reset network by depressing learn button • Check communication wires (terminal 1/terminal 2 wires); Replace if needed • Check for shorts in low voltage wiring
	1 Steady Flash	No network found	• Broken/disconnected communication wire(s) • Unit is installed as a legacy/traditional system	• Check communication wires (terminal 1/terminal 2 wires); Replace if needed • Check installation type (legacy/traditional or communicating)
	Rapid Flashing	Normal network traffic	• Control is "taking" on network as expected	• None
	On Solid	Terminal 1/Terminal 2 miss-wire	• Terminal 1 and Terminal 2 wires reversed at indoor unit, thermostat, or outdoor unit • Short between terminal 1 and terminal 2 wires • Short between terminal 1 or terminal 2 two wires and terminal C (24VAC) or terminal R (24VAC, COM)	• Check communication wires (terminal 1/terminal 2 wires); Replace if needed

Table 13

DIAGNOSTIC CODES

7 SEGMENT LED DISPLAY	DESCRIPTION OF CONDITION
(NO DISPLAY)	INTERNAL CONTROL FAULT / NO POWER
On	STANDBY, WAITING FOR INPUTS
EE	EMERGENCY MODE RUNNING
Eb	NO HEATER KIT INSTALLED - SYSTEM CALLING FOR AUXILIARY HEAT (MINOR ERROR CODE)
Ed	HEATER KIT DIP SWITCHES NOT SET PROPERLY
E5	FUSE OPEN
EF	AUXILIARY SWITCH OPEN
d0	DATA NOT ON NETWORK
d1	INVALID DATA ON NETWORK
d4	INVALID MEMORY CARD DATA
b0	BLOWER MOTOR NOT RUNNING
b1	BLOWER MOTOR COMMUNICATION ERROR
b2	BLOWER MOTOR HP (HORSE POWER) MISMATCH
b3	BLOWER MOTOR OPERATING IN POWER, TEMPERATURE, OR SPEED LIMIT
b9	LOW INDOOR AIRFLOW (MINOR ERROR CODE) (WITHOUT ELECTRICAL HEATER MODE)
9b	LOW INDOOR AIRFLOW (MAJOR ERROR CODE) (ELECTRICAL HEATER MODE ONLY)
70	EEV OPEN CIRCUIT
73	LIQUID TEMPERATURE ABNORMALITY / THERMISTOR OPEN CIRCUIT
74	GAS TEMPERATURE ABNORMALITY / THERMISTOR OPEN CIRCUIT
75	PRESSURE ABNORMALITY / PRESSURE SENSOR OPEN CIRCUIT
77	INDOOR UNIT - THERMOSTAT COMMUNICATION ERROR (STARTUP OPERATION & DURING OPERATION)
Hu	HUMIDIFICATION DEMAND (RUNNING WITHOUT HEATING)
A0	A2L REFRIGERANT LEAKAGE ALARM
AF	A2L SENSOR COMM ALARM
A1	A2L SENSOR INTERNAL ALARM
7SEG LED WILL FLASH AIRFLOW RATE	

0140A01620-A

SETTING THE MODE DISPLAY

MODE DISPLAY INTRODUCTION

A 2-digit display is provided on the printed circuit board (PCB) as a backup tool to the thermostat for accessing error codes and erasing error code history of the indoor unit. Follow the information provided in this section to learn how to use the mode display

DISPLAY

The display consists of 2 digits.

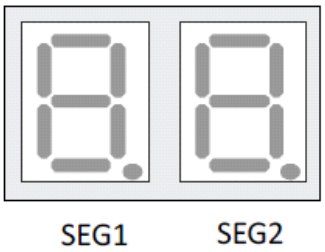

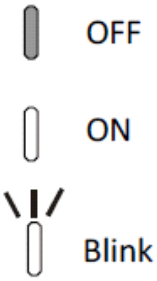

DISPLAY BUTTON LAYOUT

The display buttons shown can be used to navigate and select items:

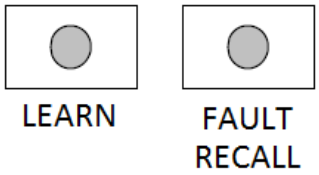

Example of button layout is shown above

FAULT CODE HISTORY NAVIGATION

This mode will allow the user to see the six most recent system faults. Please follow the flow chart to navigate to error codes from screen zero.

For a list of the fault codes, please see the TROUBLESHOOTING tables in this document.

It is also possible to erase all the diagnostics codes from this menu.

SETTING THE MODE DISPLAY

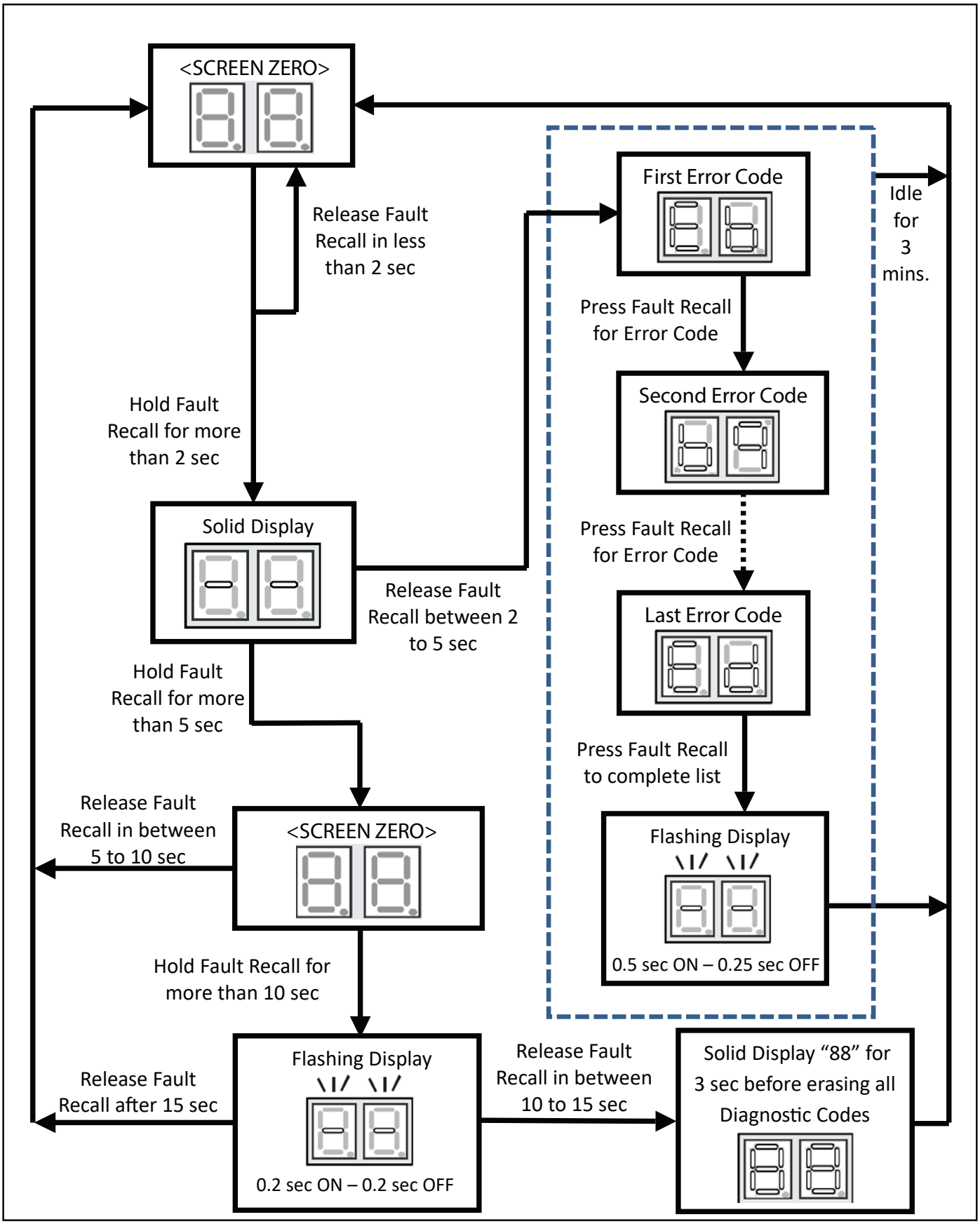

WIRING DIAGRAM

NOTE: THESE INSTRUCTIONS ARE SPECIFICALLY FOR AHVE* MODELS. DO NOT ATTEMPT TO APPLY THESE DIAGRAMS FOR ANY OTHER MODELS.

WARNING **HIGH VOLTAGE! DISCONNECT ALL POWER BEFORE SERVICING. MULTIPLE POWER SOURCES MAY BE PRESENT. FAILURE TO DO SO MAY CAUSE PROPERTY DAMAGE, PERSONAL INJURY OR DEATH.**

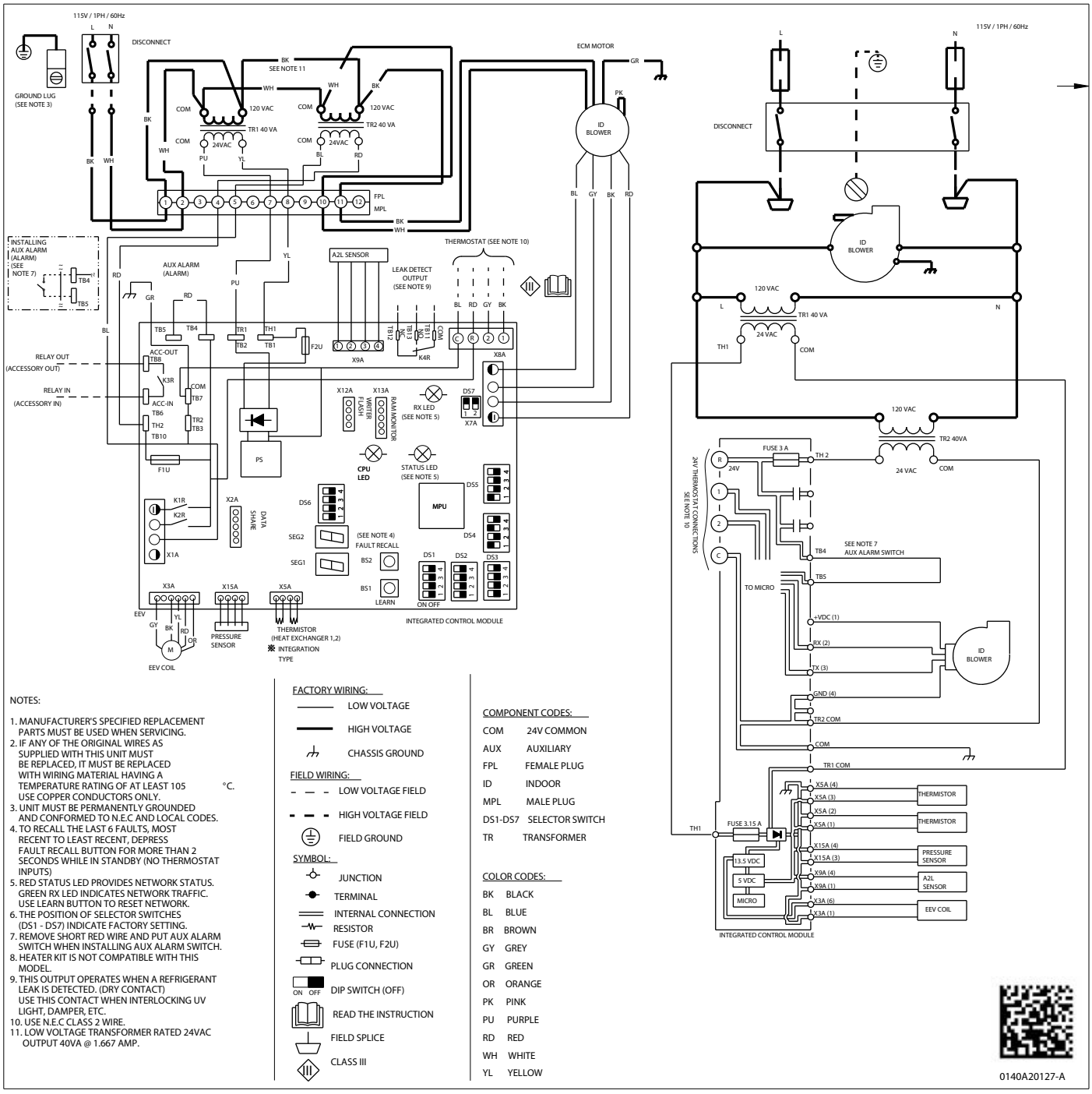

NOTES:

1. MANUFACTURER'S SPECIFIED REPLACEMENT PARTS MUST BE USED WHEN SERVICING.
2. IF ANY OF THE ORIGINAL WIRES AS SUPPLIED WITH THIS UNIT MUST BE REPLACED, IT MUST BE REPLACED WITH WIRING MATERIAL HAVING A TEMPERATURE RATING OF AT LEAST 105 °C. USE COPPER CONDUCTORS ONLY.
3. UNIT MUST BE PERMANENTLY GROUNDED AND CONFORMED TO N.E.C AND LOCAL CODES.
4. TO RECALL THE LAST 6 FAULTS, MOST RECENT TO LEAST RECENT, DEPRESS FAULT RECALL BUTTON FOR MORE THAN 2 SECONDS WHILE IN STANDBY (NO THERMOSTAT INPUTS)
5. RED STATUS LED PROVIDES NETWORK STATUS. GREEN RX LED INDICATES NETWORK TRAFFIC. USE LEARN BUTTON TO RESET NETWORK.
6. THE POSITION OF SELECTOR SWITCHES (DS1 - DS7) INDICATE FACTORY SETTING.
7. REMOVE SHORT RED WIRE AND PUT AUX ALARM SWITCH WHEN INSTALLING AUX ALARM SWITCH.
8. HEATER KIT IS NOT COMPATIBLE WITH THIS MODEL.
9. THIS OUTPUT OPERATES WHEN A REFRIGERANT LEAK IS DETECTED. (DRY CONTACT) USE THIS CONTACT WHEN INTERLOCKING UV LIGHT, DAMPER, ETC.
10. USE N.E.C CLASS 2 WIRE.
11. LOW VOLTAGE TRANSFORMER RATED 24VAC OUTPUT 40VA @ 1.667 AMP.

FACTORY WIRING:

- LOW VOLTAGE
- HIGH VOLTAGE
- CHASSIS GROUND

FIELD WIRING:

- LOW VOLTAGE FIELD
- HIGH VOLTAGE FIELD
- FIELD GROUND

SYMBOL:

- JUNCTION
- TERMINAL
- INTERNAL CONNECTION
- RESISTOR
- FUSE (F1U, F2U)
- PLUG CONNECTION
- ON OFF DIP SWITCH (OFF)
- READ THE INSTRUCTION
- FIELD SPLICE
- CLASS III

COMPONENT CODES:

COM	24V COMMON
AUX	AUXILIARY
FPL	FEMALE PLUG
ID	INDOOR
MPL	MALE PLUG
DS1-DS7	SELECTOR SWITCH
TR	TRANSFORMER

COLOR CODES:

BK	BLACK
BL	BLUE
BR	BROWN
GY	GREY
GR	GREEN
OR	ORANGE
PK	PINK
PU	PURPLE
RD	RED
WH	WHITE
YL	YELLOW

Wiring is subject to change. Always refer to the wiring diagram on the unit for the most up-to-date wiring.

AIR HANDLER

AIR HANDLER HOMEOWNER'S ROUTINE MAINTENANCE RECOMMENDATIONS

*We strongly recommend a bi-annual maintenance checkup be performed before the heating and cooling seasons begin by a **qualified servicer**.*

REPLACE OR CLEAN FILTER

IMPORTANT NOTE: Never operate unit without a filter installed as dust and lint will build up on internal parts resulting in loss of efficiency, equipment damage and possible fire.

An indoor air filter must be used with your comfort system. A properly maintained filter will keep the indoor coil of your comfort system clean. A dirty coil could cause poor operation and/or severe equipment damage.

Your air filter or filters could be located in your furnace, in a blower unit, or in "filter grilles" in your ceiling or walls. The installer of your air conditioner or heat pump can tell you where your filter(s) are, and how to clean or replace them.

Check your filter(s) at least once a month. When they are dirty, replace or clean as required. Disposable type filters should be replaced. Reusable type filters may be cleaned.

You may want to ask your dealer about high efficiency filters. High efficiency filters are available in both electronic and non-electronic types. These filters can do a better job of catching small airborne particles.

MOTORS

Indoor and outdoor fan motors are permanently lubricated and do not require additional oiling.

WARNING

HIGH VOLTAGE
Disconnect all power before servicing or installing this unit. Multiple power sources may be present. Failure to do so may cause property damage, personal injury or death.

ALUMINUM INDOOR COIL CLEANING (QUALIFIED SERVICER ONLY)

This unit is equipped with an aluminum tube evaporator coil. The safest way to clean the evaporator coil is to simply flush the coil with water. This cleaning practice remains as the recommended cleaning method for both copper tube and aluminum tube residential evaporator coils.

It has been determined that many coil cleaners and drain pan tablets contain corrosive chemicals that can be harmful to aluminum tube and fin evaporator coils. Even a one-time application of these corrosive chemicals can cause premature aluminum evaporator coil failure. Any cleaners that contain corrosive chemicals including, but not limited to, chlorine and hydroxides, should not be used.

An alternate cleaning method is to use one of the products listed in TP-109* to clean the coils. The cleaners listed are the only agents deemed safe and approved for use to clean round tube aluminum coils. TP-109 is also available on the web site in Partner Link > Service Toolkit.

NOTE: Ensure coils are rinsed well after use of any chemical cleaners.

BEFORE YOU CALL YOUR SERVICER

CAUTION

To avoid the risk of equipment damage or fire, install the same amperage breaker or fuse as you are replacing. If the circuit breaker or fuse should open again within thirty days, contact a qualified servicer to correct the problem.
If you repeatedly reset the breaker or replace the fuse without having the problem corrected, you run the risk of severe equipment damage.

- Check the thermostat to confirm that it is properly set.
- Wait 15 minutes. Some devices in the outdoor unit or in programmable thermostats will prevent compressor operation for awhile, and then reset automatically. Also, some power companies will install devices which shut off air conditioners for several minutes on hot days. If you wait several minutes, the unit may begin operation on its own.
- Check the electrical panel for tripped circuit breakers or open fuses. Reset the circuit breakers or replace fuses as necessary.
- Check the disconnect switch near the indoor furnace or blower to confirm that it is closed.
- Check for obstructions on the outdoor unit . Confirm that it has not been covered on the sides or the top. Remove any obstruction that can be safely removed. If the unit is covered with dirt or debris, call a qualified servicer to clean it.
- Check for blockage of the indoor air inlets and outlets. Confirm that they are open and have not been blocked by objects (rugs, curtains or furniture).
- Check the filter. If it is dirty, clean or replace it.

- Listen for any unusual noise(s), other than normal operating noise, that might be coming from the outdoor unit. If you hear unusual noise(s) coming from the unit, call a qualified servicer.

UV COIL AND AIR PURIFIERS

Clean Comfort brand UV coil purifiers also can be purchased from distributor. Maximum UV lamp diameter to be used is 1.375” to reduce the possibility of air leak.

The power source must be installed external of the unit. Ensure that the wiring is routed though the access panel knockout with the grommet included. A magnetic door switch must be installed to avoid an accidental ultraviolet exposure during service. UV-C radiation hazard label must be placed on any door or access panel.

Refer to UV coil purifiers product specification and installation manual for additional details. see table 14 for model and kit assignment.

UV-C PART NUMBERS	
MODELS	LAMP
UC18S15-24	UCP-16013
UC18S15-24B	UCP-16012

TABLE 14

UVc light conversion kit is required to install with the UVc light, for installation refer to the UVC drain pan kit installation manual IO -7023 for additional details. see table 14 for model and kit assignment.

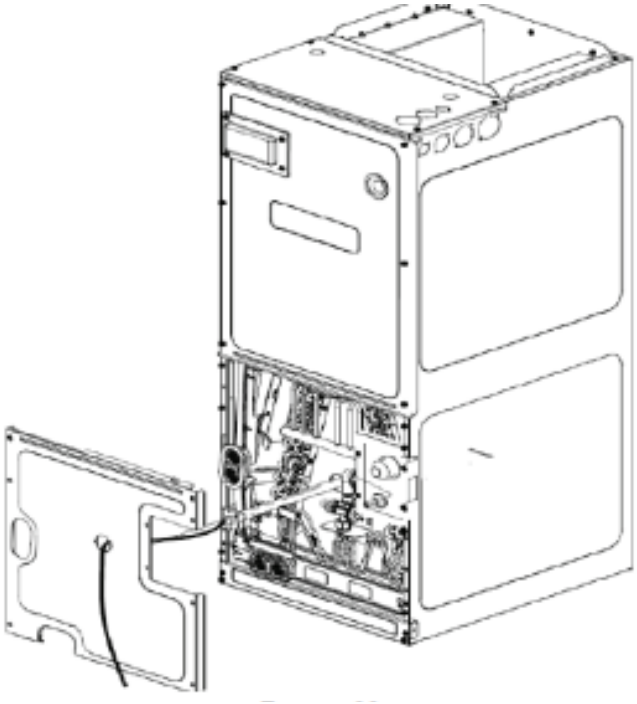

FIGURE 21

MODEL FAMILY	MODEL SIZE	KIT#	DRIAN PAN MAIN SEQ	DRIAN PAN SIDE SEQ	DRIAN PAN EXT SEQ	CONDENSATE COLLECTOR ,FRONT	CONDENSATE COLLECTOR ,BACK	CONDENSATE COLLECTOR ,MIDDLE
AHVE	24B	UVPK08	0010	0020	0050	0030	0040	NA
	36C	UVPK09	0010	0020	0050	0030	0040	NA
	42C		0010	0020	0050	0030	0040	NA
	48C		0010	0020	0050	0030	0040	NA
	48D	UVPK10	0010	0020	0050	0030	0040	NA
	60D	UVPK11	0010	0020	0050	0030	0040	NA

Table 15

A2L ACCESSORY / ZONING CONTROL KIT

When using the R-32 system, if a refrigerant leak is detected, the zoning damper must be fully opened and accessories that could be a source of ignition must be turned off. The A2L Accessory / Zoning Control Kit can fully open the damper in response to the refrigerant leak detection output from the indoor unit.

It also has an output to turn off accessories that could be a source of ignition, such as UV lights.

For details, refer to the installation manual for the A2L Accessory / Zoning Control Kit IO-7032 and spec sheet for Kit Number / Models.

START-UP CHECKLIST

Air Handler / Coil				
	Model Number	_____		
	Serial Number	_____		
ELECTRICAL				
Line Voltage (Measure L and N Voltage)	L - N	_____		
Secondary Voltage (Measure Transformer Output Voltage)	R - C	_____		
Blower Amps		_____		
Heat Strip 1 - Amps		Not Applicable		
Heat Strip 2 - Amps		Not Applicable		
BLOWER EXTERNAL STATIC PRESSURE				
Return Air Static Pressure		_____	IN. W.C.	
Supply Air Static Pressure		_____	IN. W.C.	
Total External Static Pressure (Ignoring +/- from the reading above, add total here)		_____	IN. W.C.	
TEMPERATURES				
Return Air Temperature (Dry bulb / Wet bulb)		_____	DB °F	_____ WB °F
Cooling Supply Air Temperature (Dry bulb / Wet bulb)		_____	DB °F	_____ WB °F
Heating Supply Air Temperature		_____	DB °F	
Temperature Rise		_____	DB °F	
Delta T (Difference between Supply and Return Temperatures)		_____	DB °F	

Air Handler / Coil - (Inverter Matched)	
INVERTER AH / COIL ONLY	
Check EEV and EEV wiring is secure (no adjustment required)	_____

Additional Checks	
Check wire routings for any rubbing	_____
Check product for proper draining	_____
Check screw tightness on blower wheel	_____
Check factory wiring and wire connections	_____
Check product for proper clearances as noted by installation instructions	_____

°F to °C formula: (°F - 32) divided by 1.8 = °C **°C to °F formula: (°C multiplied by 1.8) + 32 = °F**

THIS PAGE INTENTIONALLY LEFT BLANK

CUSTOMER FEEDBACK
We are very interested in all product comments.
Please fill out the feedback form on one of the following links:
Goodman® Brand Products: (http://www.goodmanmfg.com/about/contact-us).
Amana® Brand Products: (http://www.amana-hac.com/about-us/contact-us).
You can also scan the QR code on the right for the product brand you purchased to be directed to the feedback page.

GOODMAN® BRAND

AMANA® BRAND

19001 Kermier Rd. Waller, TX 77484
www.goodmanmfg.com -or- www.amana-hac.com
© 2026 Daikin Comfort Technologies Manufacturing, Inc.
Amana is a registered trademark of Maytag Corporation or its related companies and is used under license. All rights reserved.