AVPTC**14** AIR HANDLERS
Installation & Operating Instructions

© 2018-2021, 2023
Daikin Comfort Technologies Manufacturing, L.P.
19001 Kermier Rd., Waller, TX 77484
www.goodmanmfg.com - or - www.amana-hac.com
P/N: IOA-4030H Date: April 2023

Table of Contents

1 Important Safety Instructions....2
2 Shipping Inspection....3
3 Codes & Regulations....3
4 Replacement Parts....3
5 Pre-Installation Considerations....3
6 Installation Location....3
7 Refrigerant Lines....6
8 Condensate Drain Lines....9
9 Ductwork....10
10 Return Air Filters....10
11 Achieving 1.4% and 2.0% Airflow Low Leakage Rate....10
12 Electric Heat....10
13 Electrical and Control Wiring....12
14 AVPTC Motor Ortientation....13
15 Cool Cloud HVAC Phone Application....14
16 Quick Start Guide for Communicating Outdoor Units....14
17 Quick Start Guide for Non-communicating Outdoor Units....15
18 Dehumidification....16
19 Auxiliary Alarm Switch....17
20 Start-up Procedure....17
21 Accessories....17
22 Dehumidification Control Options....18
23 Ramping Profiles....19
24 Electric Air Cleaning....20
25 Start-Up Procedure....20
26 Regular Maintenance....20
27 Air Handler Troubleshooting Matrix....21
28 Air Handler Display....23
29 Airflow Label....26
30 Wiring Diagram....27
31 Start-Up Checklist....30

ATTENTION INSTALLING PERSONNEL

Prior to installation, thoroughly familiarize yourself with this Installation Manual. Observe all safety warnings. During installation or repair, caution is to be observed. It is your responsibility to install the product safely and to educate the customer on its safe use.

RECOGNIZE THIS SYMBOL AS A SAFETY PRECAUTION.

WARNING

Do not bypass safety devices.

WARNING

Only personnel that have been trained to install, adjust, service, maintenance or repair (hereinafter, "service") the equipment specified this manual should service the equipment.

This equipment is not intended for use by persons (including children) with reduced physical, sensory or mental capacities, or lack of experience and knowledge, unless they have been given supervision or instruction concerning use of the appliance by a person responsible for their safety.

Children should be supervised to ensure that they do not play with the equipment.

The manufacturer will not be responsible for any injury or property damage arising from improper supervision, service or service procedures. If you service this unit, you assume responsibility for any injury or property damage which may result. In addition, in jurisdictions that require one or more licenses to service the equipment specified in this manual, only licensed personnel should service the equipment. Improper supervision, installation, adjustment, servicing, maintenance or repair of the equipment specified in this manual, or attempting to install, adjust, service or repair the equipment specified in this manual without proper supervision or training may result in product damage, property damage, personal injury or death.

This device, which was assembled by Daikin Comfort Technologies Manufacturing, L.P., contains a component that is classified as an intentional radiator. This intentional radiator has been certified by the FCC: FCC ID QOQBGM111. And this international radiator has an Industry Canada ID: IC 5123A-BGM111.

This device complies with Part 15 of the FCC's Rules. Operation of this device is subject to two conditions:

(1) This device may not cause harmful interference; and

(2) This device must accept any interference received, including interference that may cause undesirable operation.

And this device meets the applicable Industry Canada technical specifications.

The manufacturer of the intentional radiator (model no. BGM111) is Silicon Laboratories Finland Oy, which can be contacted by calling 617-951-0200. (www.silabs.com)

The FCC responsible party is Daikin Comfort Technologies Manufacturing, L.P., and may be contacted by calling (713)-816-2500, or at 19001 Kermier Rd., Waller TX 77484. (www.GoodmanMFG.com)

This equipment complies with FCC radiation exposure limits. To ensure compliance, human proximity to the antenna shall not be less the 20cm during normal operations.

Amana® is a registered trademark of Maytag Corporation or its related companies and is used under license. All rights reserved.

1 Important Safety Instructions

The following symbols and labels are used throughout this manual to indicate immediate or potential safety hazards. It is the owner's and installer's responsibility to read and comply with all safety information and instructions accompanying these symbols. Failure to heed safety information increases the risk of personal injury, property damage, and/or product damage.

WARNING

TO PREVENT THE RISK OF PROPERTY DAMAGE, PERSONAL INJURY, OR DEATH, DO NOT STORE COMBUSTIBLE MATERIALS OR USE GASOLINE OR OTHER FLAMMABLE LIQUIDS OR VAPORS IN THE VICINITY OF THIS UNIT.

WARNING

THIS PRODUCT IS FACTORY-SHIPPED FOR USE WITH 208/240/1/60 ELECTRICAL POWER SUPPLY. DO NOT RECONFIGURE THIS AIR HANDLER TO OPERATE WITH AN OTHER POWER SUPPLY.

WARNING

TO AVOID PROPERTY DAMAGE, PERSONAL INJURY OR DEATH DUE TO ELECTRICAL SHOCK, THIS UNIT MUST HAVE AN UNINTERRUPTED, UNBROKEN ELECTRICAL GROUND. THE ELECTRICAL GROUND CIRCUIT MAY CONSIST OF AN APPROPRIATELY SIZED ELECTRICAL WIRE CONNECTING THE GROUND LUG IN THE UNIT CONTROL BOX TO THE BUILDING ELECTRICAL SERVICE PANEL.
OTHER METHODS OF GROUNDING ARE PERMITTED IF PERFORMED IN ACCORDANCE WITH THE NATIONAL ELECTRIC CODE (NEC)/ AMERICAN NATIONAL STANDARDS INSTITUTE (ANSI)/NATIONAL FIRE PROTECTION ASSOCIATION (NFPA) 70 AND LOCAL/STATE CODE. IN CANADA, ELECTRICAL GROUNDING IS TO BE IN ACCORDANCE WITH THE CANADIAN ELECTRIC CODE (CSA) C22.1.

CAUTION

WHEN INSTALLING OR SERVICING THIS EQUIPMENT, SAFETY CLOTHING, INCLUDING HAND AND EYE PROTECTION IS STRONGLY RECOMMENDED. IF INSTALLING IN AN AREA THAT HAS SPECIAL SAFETY REQUIREMENTS (HARD HATS, ETC.), OBSERVE THESE REQUIREMENTS.

WARNING

DO NOT CONNECT TO OR USE ANY DEVICE THAT IS NOT DESIGN-CERTIFIED BY THE MANUFACTURER FOR USE WITH THIS UNIT. SERIOUS PROPERTY DAMAGE, PERSONAL INJURY, REDUCED UNIT PERFORMANCE AND/OR HAZARDOUS CONDITIONS MAY RESULT FROM THE USE OF SUCH NON-APPROVED DEVICES.

WARNING

HIGH VOLTAGE

DISCONNECT ALL POWER BEFORE SERVICING OR INSTALLING THIS UNIT. MULTIPLE POWER SOURCES MAY BE PRESENT. FAILURE TO DO SO MAY CAUSE PROPERTY DAMAGE, PERSONAL INJURY OR DEATH.

DANGER
PELIGRO

CARBON MONOXIDE POISONING HAZARD

Special Warning for Installation of Furnace or Air Handling Units in Enclosed Areas such as Garages, Utility Rooms or Parking Areas

Carbon monoxide producing devices (such as an automobile, space heater, gas water heater, etc.) should not be operated in enclosed areas such as unventilated garages, utility rooms or parking areas because of the danger of carbon monoxide (CO) poisoning resulting from the exhaust emissions. If a furnace or air handler is installed in an enclosed area such as a garage, utility room or parking area and a carbon monoxide producing device is operated therein, there must be adequate, direct outside ventilation.

This ventilation is necessary to avoid the danger of CO poisoning which can occur if a carbon monoxide producing device continues to operate in the enclosed area. Carbon monoxide emissions can be (re)circulated throughout the structure if the furnace or air handler is operating in any mode.

CO can cause serious illness including permanent brain damage or death. B10259-216

RIESGO DE INTOXICACIÓN POR MONÓXIDO DE CARBONO

Advertencia especial para la instalación de calentadores ó manejadoras de aire en áreas cerradas como estacionamientos ó cuartos de servicio.

Los equipos ó aparatos que producen monóxido de carbono (tal como automóvil, calentador de gas, calentador de agua por medio de gas, etc) no deben ser operados en áreas cerradas debido al riesgo de envenenamiento por monóxido de carbono (CO) que resulta de las emisiones de gases de combustión. Si el equipo ó aparato se opera en dichas áreas, debe existir una adecuada ventilación directa al exterior.

Esta ventilación es necesaria para evitar el peligro de envenenamiento por CO, que puede ocurrir si un dispositivo que produce monóxido de carbono sigue operando en el lugar cerrado.

Las emisiones de monóxido de carbono pueden circular a través del aparato cuando se opera en cualquier modo.

El monóxido de carbono puede causar enfermedades severas como daño cerebral permanente ó muerte. B10259-216

RISQUE D'EMPOISONNEMENT AU MONOXYDE DE CARBONE

Avertissement special au sujet de l'installation d'appareils de chauffage ou de traitement d'air dans des endroits clos, tets les garages, les locaux d'entretien et les stationnements.

Evitez de mettre en marche les appareils produisant du monoxyde de carbone (tels que les automobile, les appareils de chauffage autonome,etc.) dans des endroits non ventilés tels que les d'empoisonnement au monoxyde de carbone. Si vous devez faire fonctionner ces appareils dans un endroit clos, assures-vous qu'il y ait une ventilation directe provenant de l'exterier.

Cette ventilation est nécessaire pour éviter le danger d'intoxication au CO pouvant survenir si un appareil produisant du monoxyde de carbone continue de fonctionner au sein de la zone confinée.

Les émissions de monoxyde de carbone peuvent etre recircules dans les endroits clos, si l'appareil de chauffage ou de traitement d'air sont en marche.

Le monoxyde de carbone peut causer des maladies graves telles que des dommages permanents au cerveau et meme la mort. B10259-216

2 Shipping Inspection

Always transport the unit upright; laying the unit on its side or top during transit may cause equipment damage. The installer should inspect the product upon receipt for shipping damage and subsequent investigation is the responsibility of the carrier. The installer must verify the model number, specifications, electrical characteristics, and accessories are

correct prior to installation. The distributor or manufacturer will not accept claims from dealers for transportation damage or installation of incorrectly shipped units.

2.1 Parts

Also inspect the unit to verify all required components are present and intact. Report any missing components immediately to the manufacturer or to the distributor. Use only factory authorized replacement parts (see Section 5). Make sure to include the full product model number and serial number when reporting and/or obtaining service parts.

2.2 Handling

Use caution when transporting/carrying the unit. Do not move unit using shipping straps. Do not carry unit with hooks or sharp objects. The preferred method of carrying the unit after arrival at the job site is to carry via a two-wheel hand truck from the back or sides or via hand by carrying at the cabinet corners.

3 Codes & Regulations

This product is designed and manufactured to comply with applicable national codes. Installation in accordance with such codes and/or prevailing local codes/regulations is the responsibility of the installer. The manufacturer assumes no responsibility for equipment installed in violation of any codes or regulations.

The United States Environmental Protection Agency (EPA) has issued various regulations regarding the introduction and disposal of refrigerants. Failure to follow these regulations may harm the environment and can lead to the imposition of substantial fines. Should you have any questions please contact the local office of the EPA and/or refer to EPA's website www.epa.gov.

4 Replacement Parts

When reporting shortages or damages, or ordering repair parts, give the complete product model and serial numbers as stamped on the product. Replacement parts for this product are available through your contractor or local distributor. For the location of your nearest distributor consult the white business pages, the yellow page section of the local telephone book or contact:

HOMEOWNER SUPPORT
DAIKIN COMFORT TECHNOLOGIES
MANUFACTURING, L.P.
19001 KERMIER ROAD,
WALLER, TX 77484
855-770-5678

5 Pre-Installation Considerations

5.1 Preparation

Keep this document with the unit. Carefully read all instructions for the installation prior to installing product. Make sure each step or procedure is understood and any special considerations are taken into account before starting installation. Assemble all tools, hardware and supplies needed to complete the installation. Some items may need to be purchased locally. Make sure everything needed to install the product is on hand before starting.

5.2 System Matches

The entire system (combination of indoor and outdoor sections) must be manufacturer approved and Air Conditioning, Heating, and Refrigeration Institute (AHRI) listed.
NOTE: Installation of unmatched systems is not permitted. Damage or repairs due to installation of unmatched systems is not covered under the warranty.

5.3 Interconnecting Tubing

Give special consideration to minimize the length of refrigerant tubing when installing air handlers. Refer to Remote Cooling/Heat Pump Service Manual RS6200006, and TP-107 Long Line Set Application R-410A for tubing guidelines. If possible, allow adequate length of tubing such that the coil may be removed (for inspection or cleaning services) from the cabinet without disconnecting the tubing.

5.4 Clearances

The unit clearance from a combustible surface may be 0". However, service clearance must take precedence. A minimum of 24" in front of the unit for service clearance is required. Additional clearance on one side or top will be required for electrical wiring connections. Consult all appropriate regulatory codes prior to determining final clearances. When installing this unit in an area that may become wet (such as crawl spaces), elevate the unit with a sturdy, non-porous material. In installations that may lead to physical damage (i.e. a garage) it is advised to install a protective barrier to prevent such damage. Always install units such that a positive slope in condensate line (1/4" per foot) is allowed.

5.5 Horizontal Applications

If installed above a finished living space, a secondary drain pan (as required by many building codes), must be installed under the entire unit and its condensate drain line must be routed to a location such that the user will see the condensate discharge.

5.6 Access

This unit should be installed in a manner so that it is not accessible to the public.

6 Installation Location

NOTE: These air handlers are designed for indoor installation only at a max altitude of 10,500 feet above sea level or a min altitude of -184 feet below sea level.

If the unit is located in an unconditioned area with high ambient temperature and/or high humidity, the air handler may be subject to nuisance sweating of the casing. On these installations, a wrap of 2" fiberglass insulation with a vapor barrier is recommended. A secondary drain pan below the unit is also recommended to protect the installation site.

This product line may be installed in one of the upflow, downflow, horizontal left or horizontal right orientations as shown in Figures 2, 3, 4 and 5. The unit may be installed in horizontal left orientation as shipped (refer to specific sections for more information).

6.1 Upflow and Downflow Installation (Figure 2 & 3)

1. Remove blower access panel and coil access panel. The coil access panel and tubing panel may remain screwed together during this procedure. Remove and retain the seven (7) screws securing the coil access panel to the cabinet and the six (6) screws securing the blower access panel to the cabinet.
2. Slide the coil assembly out from the cabinet. Use the drain pan to pull the assembly from the cabinet.

   IMPORTANT: Do not use manifolds, copper lines, or the flowrator to pull the coil assembly out. Failure to do so may result in braze joint damage and leaks.
3. Removal of the center support is required on units with 21” wide cabinet. Remove and retain the two (2) screws that secure the center support to the cabinet. Remove the center support.
4. **The horizontal drip shield, side drain pan, and drain pan extension must be removed. Follow the “Side Drain Pan and Extension Removal Instructions”.**
5. **For Upflow Installation:**
   a. Using the drain pan to hold the coil assembly, slide the coil assembly back into the cabinet.
   b. Reinstall the center support (if removed) using the two (2) screws removed in Step 3.
   c. Reinstall the coil access panels and reinstall blower access panel removed in Step 1 as shown in Figure 8.
6. **For Downflow Installation:**
   a. Position the unit in the downflow position.
   b. Using the drain pan to hold the coil assembly, slide the coil assembly back into the cabinet on the downflow brackets as shown in Figure 8.
   c. Reinstall the center support (if removed) using the two (2) screws removed in Step 3.
   d. Reinstall the coil access panels and reinstall blower access panel removed in Step 1 as shown in Figure 9.

Side Drain Pan and Extension Removal Instructions

Refer to Figure 1, remove the two (2) screws that secure the drip shield support brackets to the condensate collectors (front and back). Unsnap the side drain pan from the bottom drain pan using a screwdriver or any small lever. The side drain pan, drip shield brackets and the drain pan extension may now be removed. From Figure 1, drain port labeled (A) is the primary drain for this application and condensate drain line must be attached to this drain port. Drain port (a) is for the secondary drain line (if used). When the side drain pan is removed, the drain port opening in the access panel must be covered by the accessory drain port plug (DPK1) as shown in Figure 1-1.

Drain Port Plug		
Kit Number	**Description**	**Application**
DPK1	Side Drain Port Plug	All Models

DRAIN PORT PLUG
Table 1

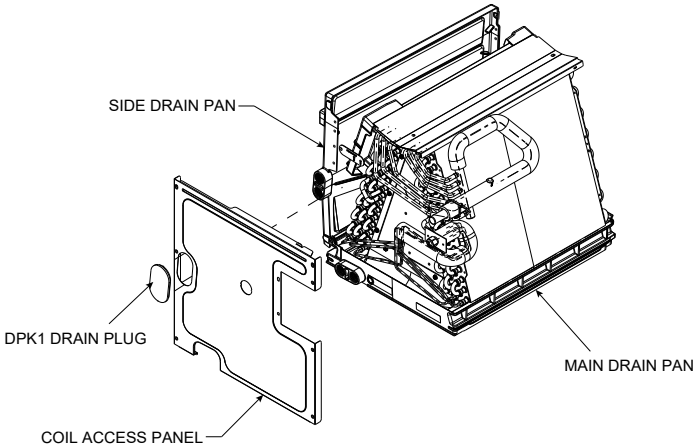

DRAIN PAN
Figure 1-1

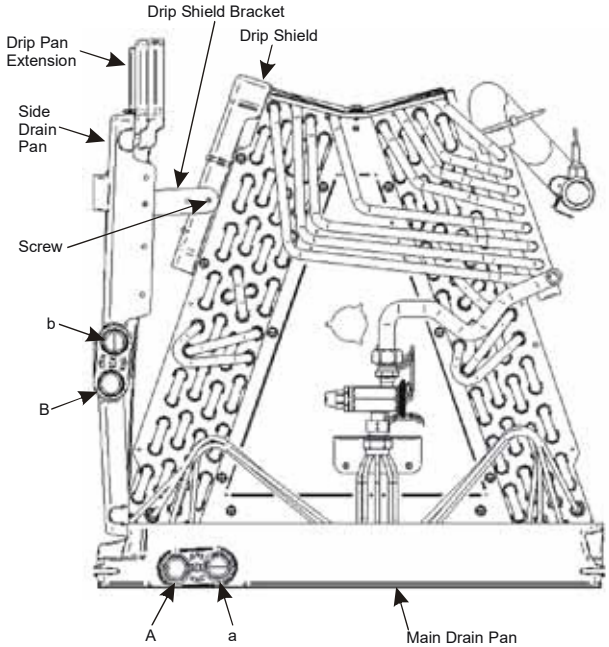

SIDE DRAIN PAN REMOVAL
Figure 1

6.2 Horizontal Left Installation (Figure 4)

No field modifications are permissible for this application. Install unit as shown in Figure 4.

Drain port labeled (B) in Figure 1 is the primary drain for this application and condensate drain line must be attached to this drain port. Drain port (b) is for the secondary drain line (if used).

Remove red plugs from side drain pan before connecting condensate drain pipes. Use removed plug to close drain ports on vertical drain pan.

6.3 HORIZONTAL RIGHT INSTALLATION (Figure 5)

NOTE: If installing a filter, an external filter must be used when installing the unit in Horizontal Right. A filter will not fit on the internal filter rails in these applications.

1. Before inverting the air handler, remove blower access panel and coil access panel. The coil access panel and tubing panel may remain screwed together during this procedure. Remove and retain the seven (7) screws securing the coil access panel to the cabinet and the six (6) screws securing the blower access panel to the cabinet.
2. Slide the coil assembly out from the cabinet. Use the drain pan to pull the assembly from the cabinet.

NOTE: Do not use manifolds, copper lines, or the flowrator to pull the coil assembly out. Failure to do so may result in braze joint damage and leaks.

3. Removal of the center support is required on units with 21” wide cabinet. Remove and retain the two (2) screws that secure the center support to the cabinet. Remove the center support.
4. Position the unit in the downflow position.
5. Remove side drain pan extension if present.
6. Using the drain pan to hold the coil assembly, slide the coil assembly back into the cabinet on the downflow brackets as shown in Figure 7.
7. Reinstall the center support (if removed) using the two (2) screws removed in Step 5.
8. Reinstall the coil access panels and reinstall blower access panel removed in Step 1 as shown in Figure 9.
9. Drain Connections for Horizontal Right Installation
   a. Drain port labeled (B) in Figure 1 is the primary drain for this application and condensate drain line must be attached to this drain port. Drain port (b) is for the secondary drain line (if used).
   b. Remove red plugs from side drain pan before connecting condensate drain pipes. Use removed plug to close drain ports on vertical drain pan.

CMK0008 Condensate Kit	CMK0009 Condensate Kit	CMK0010 Condensate Kit	CMK0012 Condensate Kit	CMK0013 Condensate Kit	CMK0014 Condensate Kit
AVPTC25B14	AVPTC29B14	AVPTC31C14	AVPTC49D14	AVPTC33C14	AVPTC49C14
	AVPTC37B14	AVPTC37C14	AVPTC61D14	AVPTC39C14	
		AVPTC37D14			
		AVPTC59C14			
		AVPTC59D14			

CONDENSATE KIT
Table 2

MODEL LIST FOR DOWNFLOW KITS

DFK-B Downflow Kit	DFK-C Downflow Kit	DFK-D Downflow Kit
AVPTC25B14**	AVPTC31C14**	AVPTC37D14**
AVPTC29B14**	AVPTC37C14**	AVPTC49D14**
AVPTC35B14**	AVPTC59C14**	AVPTC59D14**
AVPTC37B14**	AVPTC33C14**	AVPTC61D14**
	AVPTC39C14**	
	AVPTC49C14**	

DOWNFLOW KIT
Table 3

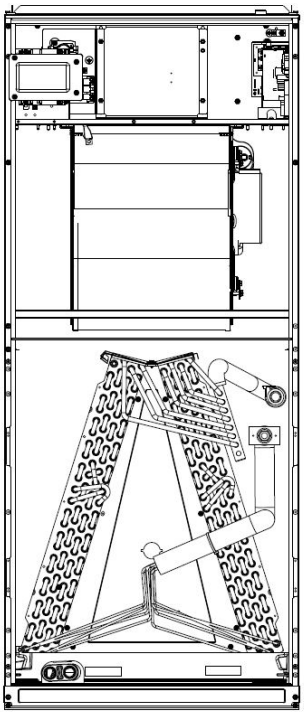

UPFLOW
Figure 2

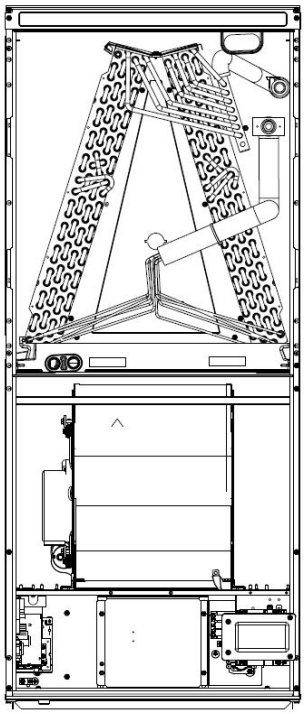

DOWFLOW
Figure 3

NOTE: If removing only the coil access panel from the unit, the filter access panel must be removed first. Failure to do so may result in panel damage.

Do not install the air handler in a location that violates the instructions provided with the condenser. If the unit is located in an unconditioned area with high ambient temperature and/or high humidity, the air handler may be subject to nuisance sweating of the casing. On these installations, a wrap of 2” fiberglass insulation with a vapor barrier is recommended.

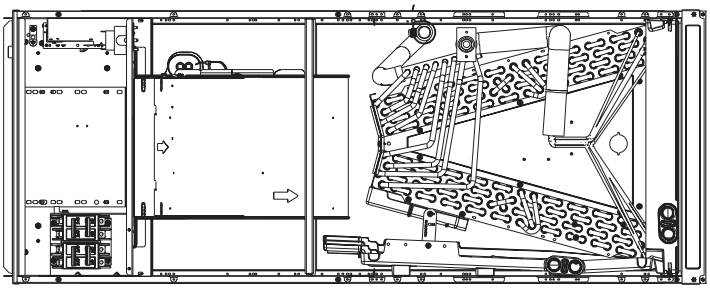

HORIZONTAL LEFT
Figure 4

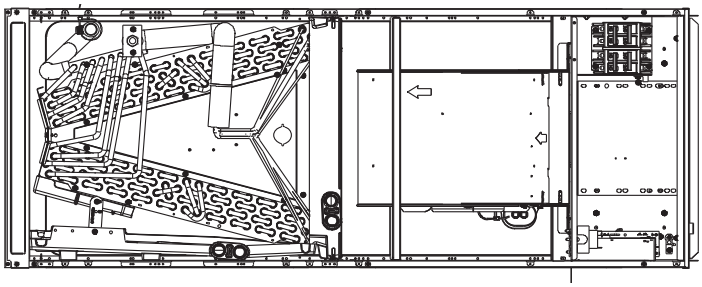

HORIZONTAL RIGHT
Figure 5

7 Refrigerant Lines

NOTE: Refrigerant tubing must be routed to allow adequate access for servicing and maintenance of the unit.

7.1 Tubing Size

For the correct tubing size, follow the specification for the condenser/heat pump.

7.2 Tubing Preparation

All cut ends are to be round, burr free, and clean. Failure to follow this practice increases the chances for refrigerant leaks. The suction line is spun closed and requires tubing cutters to remove the closed end.

NOTE: To prevent possible damage to the tubing joints, do not handle coil assembly with manifold or flowrator tubes. Always use clean gloves when handling coil assemblies.

NOTE: The use of a heat shield is strongly recommended when brazing to avoid burning the serial plate or the finish of the unit. Heat trap or wet rags must be used to protect heat sensitive components such as service valves and TXV valves sensing bulb.

WARNING

THIS PRODUCT IS FACTORY-SHIPPED WITH R-410A AND DRY NITROGEN MIXTURE GAS UNDER PRESSURE. USE APPROPRIATE SERVICE TOOLS AND FOLLOW THESE INSTRUCTIONS TO PREVENT INJURY.

WARNING

A QUENCHING CLOTH IS STRONGLY RECOMMENDED TO PREVENT SCORCHING OR MARRING OF THE EQUIPMENT FINISH WHEN BRAZING CLOSE TO THE PAINTED SURFACES. USE BRAZING ALLOY OF 5% MINIMUM SILVER CONTENT.

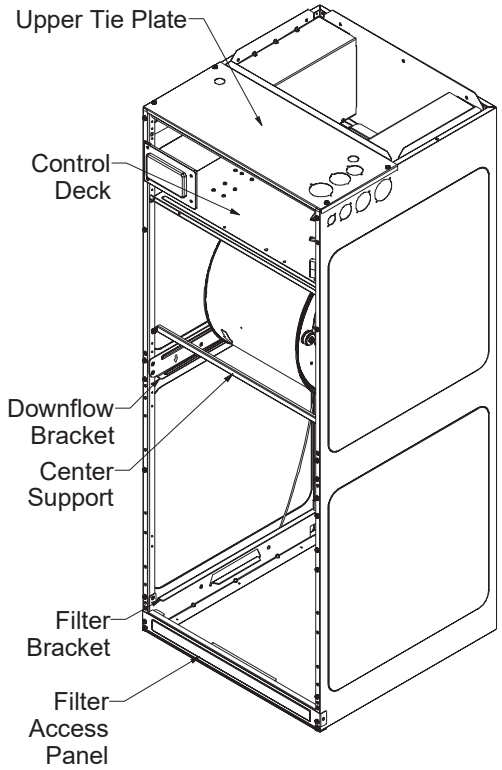

INTERNAL PART TERMINOLOGY
Figure 6

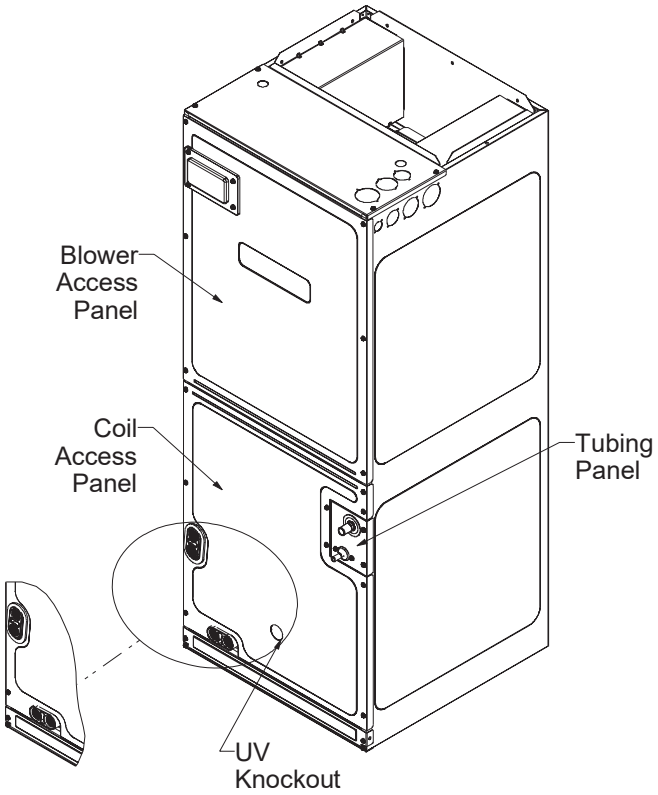

EXTERNAL PART TERMINOLOGY
Figure 7

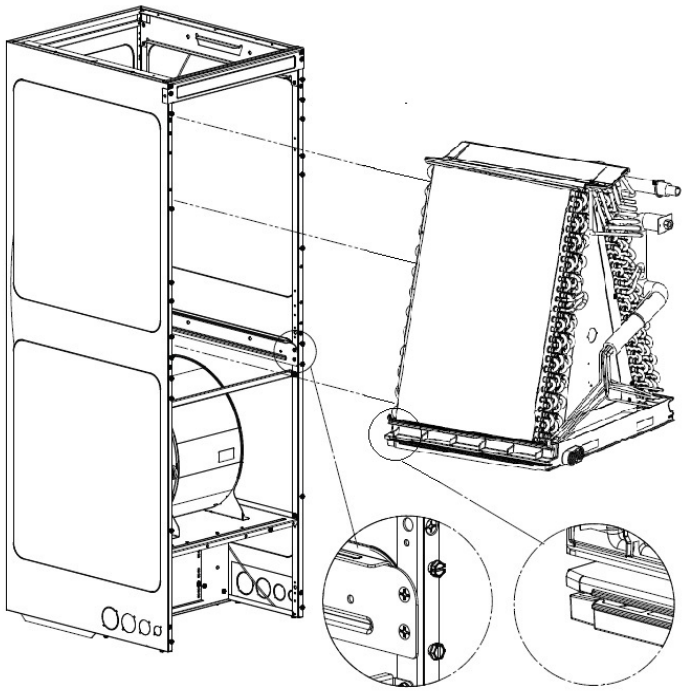

IMPORTANT NOTE:

Ensure coil slides on the rails along the groove provided on the drain pan side walls. Failure to do so will result in improper condensate drainage.

COIL INSTALLATION FOR DOWNFLOW
Figure 8

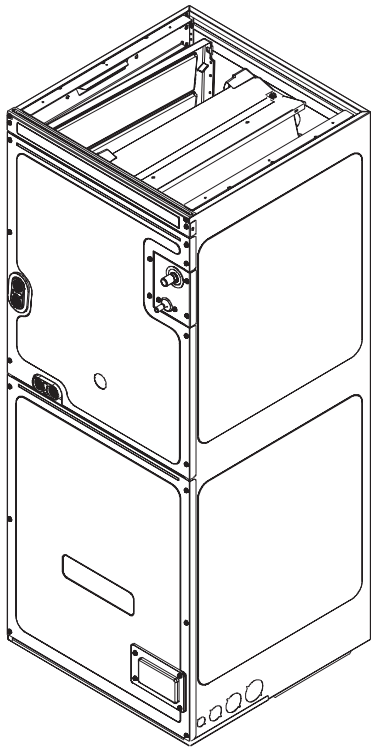

ACCESS PANEL CONFIGURATION
FOR DOWNFLOW OR HORIZONTAL RIGHT
Figure 9

CAUTION

Applying too much heat to any tube can melt the tube. Torch heat required to braze tubes of various sizes must be proportional to the size of the tube. Service personnel must use the appropriate heat level for the size of the tube being brazed.

7.3 Tubing Connections for TXV Models

TXV models come with factory installed TXV with the bulb pre-installed on the vapor tube.

1. Remove refrigerant tubing panel or coil (lower) access panel.
2. Remove access valve fitting cap and depress the valve stem in access fitting to release pressure. No pressure indicates possible leak.
3. Replace the refrigerant tubing panel.
4. Remove the spin closure on both the liquid and suction tubes using a tubing cutter.
5. Insert liquid line set into liquid tube expansion and slide grommet about 18” away from braze joint.
6. Insert suction line set into suction tube expansion and slide insulation and grommet about 18” away from braze joint.
7. Braze joints. Quench all brazed joints with water or a wet rag upon completion of brazing.

NOTE: The sensing bulb must be permanently located. A heat shield, heat trap, or wet rag must be used during brazing to prevent damage to the TXV valve.

8. Replace access panels, suction line grommet, insulation and all screws.

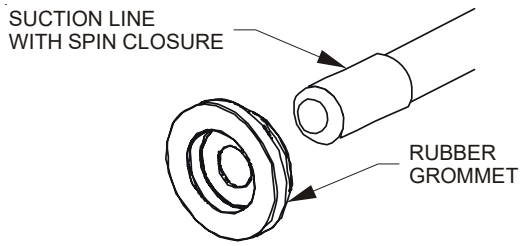

SUCTION LINE GROMMET
Figure 10

7.4 Thermal Expansion Valve System Adjustment

The following information for the indoor unit should be verified before attempting to charge system or adjust TXV if necessary.

1. Total static pressure is .5” WC or less.
2. Airflow is correct for installed unit.
3. Airflow tables are in the installation manual and Spec Sheet for Indoor Unit.
4. Complete airflow tables and charging information are in Service Manual RS6200006.
5. The outdoor temperature must be 60°F or higher.
6. Set the room thermostat to COOL, fan switch to AUTO
7. Set the temperature control well below room temperature.

Superheat adjustments should not be made until indoor ambient conditions have stabilized. This could take up to 24 hours depending on indoor temperature and humidity. Before checking superheat run the unit in cooling for 10 minutes or until refrigerant pressures stabilize. Use the following guidelines and methods to check unit operation and ensure that the refrigerant charge is within limits. NOTE: Charge two stage units on low stage.

1. Purge gauge lines. Connect service gauge manifold to base-valve service ports.
2. Temporarily install a thermometer on the liquid line at the liquid line service valve and 4-6” from the compressor on the suction line. Ensure the thermometer makes adequate contact and is insulated for best possible readings. Use liquid line temperature to determine subcooling and vapor temperature to determine superheat.
3. Check subcooling and superheat. The system should have a subcooling of 8°F +/- 1°F and two-stage compressor systems should have a Subcooling of 6°F +/- 1°F. and superheat of 8°F +/- 1°F. If subcooling and superheat are low, adjust TXV to 8°F +/- 1°F superheat, then check subcooling.
   a. If subcooling is low and superheat is high, add charge to raise subcooling to 8°F +/- 1°F. Two-stage compressor systems should have a Subcooling of 6°F +/- 1°F then check superheat.
   b. If subcooling and superheat are high, adjust TXV valve to 8°F +/- 1°F superheat, then check subcooling.

Superheat Adjustments (Only if necessary)

1. Attach a pipe clamp thermometer near the suction line service valve at the outdoor unit.
   a. Ensure the thermometer makes adequate contact for the best possible readings.
2. TXV-based systems should have a Superheat value of 8°F +/- 1°F.
3. Adjust Superheat by turning the TXV valve stem clockwise to increase and counterclockwise to decrease. Adjustments should be made opening or closing the valve by no more than ¼ turn at a time. Allow the system to stabilize 15 to 20 minutes before making additional adjustments if necessary.
4. After adjustments are complete replace cap on adjustment stem and tighten 1/6 turn.
5. Remove gauges and check the Schrader ports for leaks and tighten valve cores if necessary. Install caps finger tight.

NOTE: In situations where the TXV must be removed and replaced or re-installed into the system, the TXV should be hand tightened first and then apply a half turn to fully set the TXV. No more than 20 ft-lb torque should be applied to the joints of the TXV.

SATURATED SUCTION PRESSURE TEMPERATURE CHART	
SUCTION PRESSURE	SATURATED SUCTION
PSIG	R-410A
50	1
52	3
54	4
56	6
58	7
60	8
62	10
64	11
66	13
68	14
70	15
72	16
74	17
76	19
78	20
80	21
85	24
90	26
95	29
100	31
110	36
120	41
130	45
140	49
150	53
160	56
170	60

Table 4

SUBCOOL FORMULA =

SAT. LIQUID LINE TEMP. - LIQUID LINE TEMP.

SUPERHEAT FORMULA =

SUCT. LINE TEMP. - SAT. SUCT. TEMP.

SATURATED LIQUID PRESSURE TEMPERATURE CHART	
LIQUID PRESSURE	SATURATED LIQUID TEMPERATURE °F
PSIG	R-410A
200	70
210	73
220	76
225	78
235	80
245	83
255	85
265	88
275	90
285	92
295	95
305	97
325	101
355	108
375	112
405	118
415	119
425	121
435	123
445	125
475	130
500	134
525	138
550	142
575	145
600	149
625	152

Table 5

8 Condensate Drain Lines

The coil drain pan has a primary and a secondary drain with ¾" NPT female connections. The connectors required are ¾" NPT male, either PVC or metal pipe, and should be hand tightened to a torque of no more than 37 in-lbs. to prevent damage to the drain pan connection. An insertion depth of approximately ⅜" to ½" (3-5 turns) should be expected at this torque.

1. Ensure drain pan hole is not obstructed.
2. To prevent potential sweating and dripping on to finished space, it may be necessary to insulate the condensate drain line located inside the building. Use Armaflex® or similar material.

A secondary condensate drain connection has been provided for areas where the building codes require it. Pitch all drain lines a minimum of ¼" per foot to provide free drainage. Provide required support to the drain line to prevent bowing. If the secondary drain line is required, run the line separately from the primary drain and end it where condensate discharge can be easily seen.

NOTE: Water coming from secondary line means the coil primary drain is plugged and needs immediate attention.

CAUTION

IF SECONDARY DRAIN IS NOT INSTALLED, THE SECONDARY ACCESS MUST BE PLUGGED.

Insulate drain lines located inside the building or above a finished living space to prevent sweating. Install a condensate trap to ensure proper drainage.

NOTE: When units are installed above ceilings, or in other locations where damage from condensate overflow may occur, it is MANDATORY to install a field fabricated auxiliary drain pan under the coil cabinet enclosure.

The installation must include a "P" style trap that is located as close as is practical to the evaporator coil. See **Figure 11** for details of a typical condensate line "P" trap.

NOTE: Units operating in high static pressure applications may require a deeper field constructed "P" style trap than is shown in Figure 11 to allow proper drainage and prevent condensate overflow.

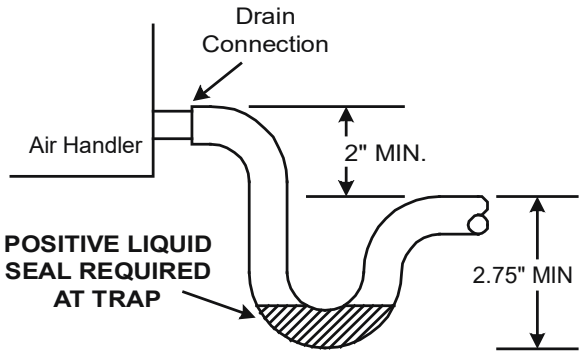

Figure 11

NOTE: Trapped lines are required by many local codes. In the absence of any prevailing local codes, please refer to the requirements listed in the Uniform Mechanical Building Code.

A drain trap in a **draw-through** application prevents air from being drawn back through the drain line during fan operation thus preventing condensate from draining, and if connected to a sewer line to prevent sewer gases from being drawn into the airstream during blower operation.

Use of a condensate removal pump is permitted when necessary. This condensate pump should have provisions for shutting off the control voltage should a blocked drain occur. A trap must be installed between the unit and the condensate pump.

IMPORTANT NOTE: The evaporator coil is fabricated with oils that may dissolve styrofoam and certain types of plastics. Therefore, a removal pump or float switch must not contain any of these materials.

Tip: Priming the "P" trap may avoid improper draining at the initial installation and at the beginning of the cooling season.

9 Ductwork

This air handler is designed for a complete supply and return ductwork system.

To ensure correct system performance, the ductwork is to be sized to accommodate 350-450 CFM per ton of cooling with the static pressure not to exceed 0.5" in w.c. Refer to ACCA Manual D, Manual S and Manual RS for information on duct sizing and application. Flame retardant ductwork is to be used and sealed to the unit in a manner that will prevent leakage.

NOTE: A downflow application with electric heat must have an L-shaped sheet metal supply duct without any outlets or registers located directly below the heater.

9.1 Return Ductwork

DO NOT LOCATE THE RETURN DUCTWORK IN AN AREA THAT CAN INTRODUCE TOXIC, OR OBJECTIONABLE FUMES/ODORS INTO THE DUCTWORK. The return ductwork is to be connected to the air handler bottom (upflow configuration).

10 Return Air Filters

Each installation must include a return air filter. This filtering may be performed at the air handler using the factory filter rails or externally such as a return air filter grille. When using the factory filter rails, a nominal 16x20x1", 20x20x1" or 24x20x1" (actual dimension must be less than 23-½"x20") filter can be installed on a B, C and D cabinet respectively (the cabinet size is the seventh letter of the model number).

11 Achieving 1.4% and 2.0% Airflow Low Leakage Rate

Ensure all the gaskets remain intact on all surfaces as shipped with the unit. These surfaces are areas between the upper tie plate and coil access panel, blower access and coil access panels, and between the coil access and filter access panels. Ensure upon installation, that the plastic breaker cover is sitting flush on the blower access panel and all access panels are flush with each other and the cabinet. With these requirements satisfied, the unit achieves less than 1.4% airflow leakage @ 0.5 inch wc static pressure and less than 2% airflow leakage @1inch wc static pressure when tested in accordance with ASHRAE Standard 193.

12 Electric Heat

CAUTION

DO NOT OPERATE THIS PRODUCT WITHOUT ALL THE DUCTWORK ATTACHED.

Refer to the installation manual provided with the electric heat kit for the correct installation procedure. All electric heat must be field installed. If installing this option, the ONLY heat kits that are permitted to be used are the HKS series. Refer to the air handler unit's Serial and Rating plate or the HKS specification sheets to determine the heat kits compatible with a given air handler. No other accessory heat kit besides the HKS series may be installed in these air handlers.

The heating mode temperature rise is dependent upon the system airflow, the supply voltage, and the heat kit size (kW) selected. Use data provided in Tables 3, 4 and 5 to determine the temperature rise (°F).

CFM	HEAT KIT NOMINAL kW							
	3	5	6	8	10	15	19/20	25
800	12	19	23	31	37	56		
1000	9	15	19	25	30	44		
1200	8	12	15	21	25	37	49	62
1400	7	11	13	18	21	32	42	53
1600	6	9	12	15	19	28	37	46
1800	5	8	10	14	16	25	33	41
2000	5	7	9	12	15	22	30	37

230/1/60 SUPPLY VOLTAGE - TEMP. RISE °F

Table 6

CFM	HEAT KIT NOMINAL kW							
	3	5	6	8	10	15	19/20	25
800	11	18	22	30	35	54		
1000	9	14	18	24	28	42		
1200	7	12	15	20	24	35	47	59
1400	6	10	13	17	20	30	40	51
1600	6	9	11	15	18	27	35	44
1800	5	8	10	13	16	24	31	39
2000	4	7	9	12	14	21	28	35

220/1/60 SUPPLY VOLTAGE - TEMP. RISE °F

Table 7

CFM	HEAT KIT NOMINAL kW							
	3	5	6	8	10	15	19/20	25
800	10	17	21	28	33			
1000	8	13	17	22	27	40		
1200	7	11	14	19	22	33	45	56
1400	6	10	12	16	19	29	38	48
1600	5	8	10	14	17	25	33	42
1800	5	7	9	12	15	22	30	37
2000	4	7	8	11	13	20	27	33

208/1/60 SUPPLY VOLTAGE - TEMP. RISE °F

Table 8

Model	HEATER (kW)								
	3	5	6	8	10	15	19	20	25
AVPTC25B14	550	650	700	800	850	875			
AVPTC29B14	550	650	700	800	875	875			
AVPTC35B14	550	650	700	800	875	1050			
AVPTC37B14	550	650	700	800	875	1050			
AVPTC31C14	600	700	770	880	970	1090	1280		
AVPTC33C14	600	700	750	850	920	950			
AVPTC37C14		700	770	880	970	1090	1280		
AVPTC39C14		700	770	880	970	1090	1280		
AVPTC49C14		800	800	950	1090	1290	1345		
AVPTC59C14		800	800	950	1090	1290	1345		
AVPTC37D14		870	970	1060	1120	1220		1250	
AVPTC49D14		950	1060	1150	1220	1520			
AVPTC59D14		990	1110	1200	1240	1520		1520	
AVPTC61D14		1030	1150	1250	1320	1650		1690	1750

MINIMUM CFM REQUIREMENTS FOR HEATER KITS

Table 9

NOTE: For installations not indicated above the following formula is to be used:

TR = (kW x 3412) x (Voltage Correction) / (1.08 x CFM)

Where: TR = Temperature Rise
kW = Heater Kit Actual kW
3412 = Btu per kW
VC* = .96 (230 Supply Volts)
= .92 (220 Supply Volts)
= .87 (208 Supply Volts)
1.08 = Constant
CFM = Measured Airflow

VC (Voltage Correction)*

NOTE: The Temperature Rise Tables can also be used to estimate the air handler airflow delivery. When using these tables for this purpose set the room thermostat to maximum heat and allow the system to reach steady state conditions. Insert two thermometers, one in the return air and one in the supply air. The temperature rise is the supply air temperature minus the return air temperature. Using the temperature rise calculated, CFM can be estimated from the TR formula above. See Spec Sheets and/or Service Manual for more information.

Comfort Setting Menu (CFS): There are 6 options available in the Comfort Setting Menu which impacts system target run time and electric heat functionality. Electric heat operation adjustments only apply if a communicating heat pump is installed. Comfort Setting Options 1 – 5 have set values for the System Target Runtime and option 6 enables additional menus to customize all comfort settings. See list below for the System Target Run times associated with the first 5 Comfort Settings. These first 5 options are setup to help satisfy the thermostat slower or faster based on the selection where option 1, with a 10 minute Target Runtime, is attempting to satisfy much faster than option 5, with a 30 minute Target Runtime.

System Target Runtime:

Comfort Setting Option 1) 10 Minute System Target Runtime
Comfort Setting Option 2) 15 Minute System Target Runtime
Comfort Setting Option 3) 20 Minute System Target Runtime
Comfort Setting Option 4) 25 Minute System Target Runtime
Comfort Setting Option 5) 30 Minute System Target Runtime

Electric Heat Adjustment: This system will automatically determine if the heat pump is capable of satisfying the thermostat in the selected System Target Runtime. If the heat pump is unable to satisfy in the selected time, electric heat settings will determine how many attempts should be given to the heat pump before temporarily locking it out and using the furnace. These electric heat settings also determine at what time the system should remove the temporary heat pump lockout and run the heat pump again.

There are four adjustable items associated with back up electric heat operation control. In the same way as the System Target Time, each of these items have defaulted values for Comfort Settings 1 – 5. Only when Comfort Setting 6 is selected will each item be available for full adjustment.

1. **Stage Up Percent (7 segment menu SUP):** This is a value that determines how far past the target runtime the system should continue running the heat pump before transitioning to the furnace. For example, assume this menu was set to 20% with a target runtime of 20 minutes. If the thermostat did not remove the heating call after 20 minutes, the system would allow for an additional 20% heat pump run (20% of the 20 minute target is an additional 4 minutes). In this case, the system would turn on back up electric heat after 24 minutes if the thermostat call was still present. Each time this occurs, the system records this as a strike against the heat pump (the strike is important when looking at the Over Target Threshold)

2. **Over Target Threshold (7 segment menu Ott):** If the heat pump has consecutively activated back up electric heat for the selected Over Target Threshold amount of times, meaning for this many consecutive cycles it has been unable to satisfy the target time by itself, then the heat pump will be temporarily locked out and the furnace will become the primary heat source.

3. **Stage Down Percent (7 segment menu SdP):** This only applies when the heat pump and back up electric heat are activated on initial start-up. In this case, the system will try to determine when the best time to operate the heat pump individually again. To determine this, the system looks at how easily the air handler is able to satisfy the thermostat using the heat pump with back up electric heat. Assume this setting is 15% and the target time is 20 minutes. If the heat pump with back up electric heat can satisfy the thermostat in less than 17 minutes (20 minutes - 15% = 17 minutes) then the algorithm records a strike against the air handler (this strike is important when looking at the Under Target Threshold).

4. **Under Target Threshold (7 segment menu Utt):** If the air handler is able to satisfy the thermostat using the heat pump with back up electric heat for the selected number of consecutive cycles the electric heat operation will be temporarily removed. The heat pump will then be used during the next cycle. If the heat pump can satisfy the thermostat in less than the System Target Runtime the back up heat operation will be completely removed and the heat pump will become the primary heat source again. if it fails to do so, the strike count against the furnace will be reset and the furnace will remain the temporary primary heat source until the Under Target Threshold is reached again.

The system will automatically make adjustments in an attempt to satisfy the thermostat as close to this target runtime as possible. After a power cycle or mode change (cooling to heating or heating to cooling) the system will run full capacity for the selected mode during the first thermostat call. Based on the selected target runtime and how long the initial cycle takes to satisfy the thermostat, the control algorithm will adjust the system stage times for a 2 stage unit or the capacity demand percentage for an inverter / modulating unit for the next cycle. **NOTE**: Actual run times may change depending on variations of load throughout the day.

The following table shows the default values for all Comfort Setting Options (1 – 5)

Comfort Setting Option	Target Time (Minutes)	Stage Up Percentage (%)	Stage Down Percentage (%)	Over Target Threshhold (Strike Count)	Under Target Threshhold (Strike Count)
1	10	20	20	2	10
2	15	20	20	4	8
3	20	20	20	6	6
4	25	20	20	8	4
5	30	20	20	10	2

The following table shows the ranges for each of item when the adjustable Comfort Setting Option 6 is selected. The table shows the minimum value, the maximum value and the defaulted value. All items can be adjusted up or down by increments of 1 which provides full flexibility for all items.

NOTE: It is critical that these numbers be set properly. If Comfort Setting option 3 is desired but a target time of 60 is preferred, select Comfort Setting Option 6 to enable all the adjustable menus, set the Target Time to 60 and make sure the other menus are set to match that of Comfort Setting Option 3.

Menu	Minimum Value	Maximum Value	Default Value
Target Time (t9t)	1 minute	240 minutes	60 minutes
Stage Up Percent (SUP)	0%	100%	20%
Stage Down Percent (SdP)	0%	100%	20%
Over Target Threshold (Ott)	1 strike	254 strikes	20 strikes
Under Target Threshold (Utt)	1 strike	254 strikes	20 strikes

13 Electrical and Control Wiring

IMPORTANT: All routing of electrical wiring must be made through provided electrical knockouts. Do not cut, puncture or alter the cabinet for electrical wiring.

13.1 Building Electrical Service Inspection

This unit is designed for single-phase electrical supply only. DO NOT OPERATE ON A THREE-PHASE POWER SUPPLY. Measure the power supply to the unit. The supply voltage **must** be measured and be in agreement with the unit nameplate power requirements and within the range shown.

Nominal Input	Minimum Voltage	Maximum Voltage
208-240	197	253

ELECTRICAL VOLTAGE

Table 10

13.2 Wire Sizing

Wire size is important to the operation of your equipment. Use the following check list when selecting the appropriate wire size for your unit.

CAUTION

FIRE HAZARD!
To avoid the risk of property damage, personal injury or fire, use only copper conductors.

WARNING

HIGH VOLTAGE
Disconnect ALL power before servicing or installing this unit. Multiple power sources may be present. Failure to do so may cause property damage, personal injury or death.

WARNING

HIGH VOLTAGE!
To avoid property damage, personal injury or death due to electrical shock, this unit MUST have an uninterrupted, unbroken electrical ground. The electrical ground circuit may consist of an appropriately sized electrical wire connecting the ground lug in the unit control box to the building electrical service panel.
Other methods of grounding are permitted if performed in accordance with the National Electric Code (NEC)/ American National Standards Institute (ANSI)/National Fire Protection Association (NFPA) 70 and local/state code. In Canada, electrical grounding is to be in accordance with the Canadian Electric Code (CSA) C22.1.

- **Wire used must carry the Minimum Circuit Ampacity (MCA) listed on the unit's Series and Rating Plate.**
- Refer to the NEC (USA) or CSA (Canada) for wire sizing. The unit MCA for the air handler and the optional electric heat kit can be found on the unit Series and Rating Plate.
- **Wire must be sized to allow no more than a 2% voltage drop from the building breaker/fuse panel to the unit.**
- Wires with different insulation temperature rating have varying ampacities - be sure to check the temperature rating used.

  Refer to the latest edition of the National Electric Code or in Canada the Canadian Electric Code when determining the correct wire size.

13.3 Maximum Overcurrent Protection (MOP)

Every installation must include an NEC (USA) or CEC (Canada) approved overcurrent protection device. Also, check with local or state codes for any special regional requirements.

Protection can be in the form of fusing or HACR style circuit breakers. The Series and Rating Plate provides the maximum overcurrent device permissible.

NOTE: Fuses or circuit breakers are to be sized larger than the equipment MCA but not to exceed the MOP.

13.4 Electrical Connections – Supply Voltage

IMPORTANT NOTE: USE COPPER CONDUCTORS ONLY.

Knockouts are provided on the air handler top panel and sides of the cabinet to allow for the entry of the supply voltage conductors, as shown in Figure 13. If the knockouts on the cabinet sides are used for electrical conduit, an adapter ring must be used in order to meet UL1995 safety requirements. An NEC or CEC approved strain relief is to be used at this entry point. Some codes/ municipalities require the supply wire to be enclosed in conduit. Consult your local codes.

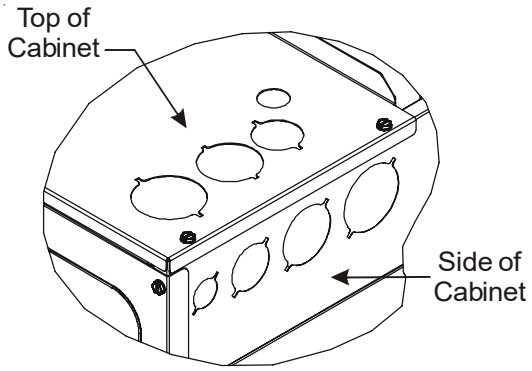

KNOCK-OUT FOR ELECTRICAL CONNECTIONS
Figure 12

13.4.1 Air Handler Only (Non-Heat Kit Models)

The building supply connects to the stripped black and red wires contained in the air handler electrical compartment cavity. A ground screw is also contained in this area. Attach the Supply wires to the air handler conductors as shown in the unit wiring diagram using appropriately sized solderless connectors or other NEC or CEC approved means.

13.4.2 Air Handler - Non-Circuit Breaker Heat Kits

A terminal block is provided with the HKS kit to attach the power supply and air handler connections. Follow the HKS Installation Manual and wiring diagram for complete wiring details.

13.4.3 Air Handler With Circuit Breaker Heat Kit

The air handler has a plastic cover on the upper access panel that will require either one or both sections to be removed to allow the heat kit circuit breaker(s) to be installed. The circuit breakers have lugs for power supply connection. See the HKS Installation Instructions for further details.

14 AVPTC Motor Orientation

If the unit is in the upflow position, there is no need to rotate the motor. If the unit is in the downflow position, loosen motor mount and rotate motor as shown in the *AVPTC Motor Orientation* figure below. Be sure motor is oriented with the female connections on the casing down. If the motor is not oriented with the connections down, water could collect in the motor and may cause premature failure.

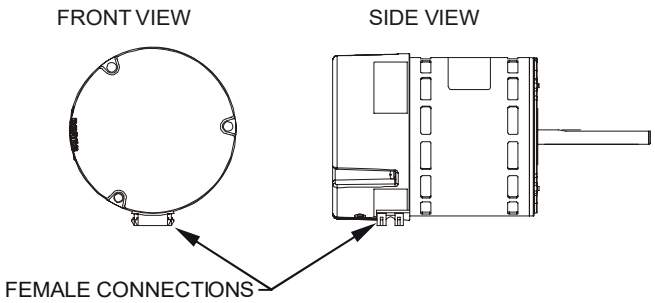

AVPTC MOTOR ORIENTATION
Figure 13

15 Cool Cloud HVAC Phone Application

NOTE: This equipment has been tested and found to comply with the limits for a Class B digital device, pursuant to part 15 of the FCC Rules. These limits are designed to provide reasonable protection against harmful interference in a residential installation. This equipment generates, uses and can radiate radio frequency energy and, if not installed and used in accordance with the instructions, may cause harmful interference to radio communications. However, there is no guarantee that interference will not occur in a particular installation. If this equipment does cause harmful interference to radio or television reception, which can be determined by turning the equipment off and on, the user is encouraged to try to correct the interference by one or more of the following measures:

—Reorient or relocate the receiving antenna.

—Increase the separation between the equipment and receiver.

—Connect the equipment into an outlet on a circuit different from that to which the receiver is connected.

—Consult the dealer or an experienced radio/ TV technician for help.

Actual screens may look different based on the mobile device being used.

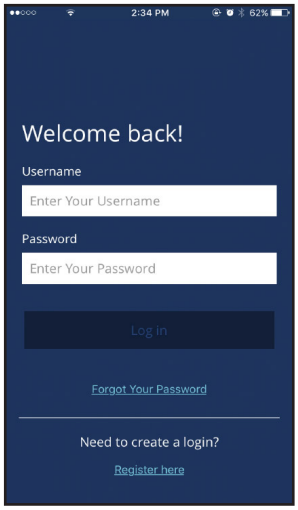

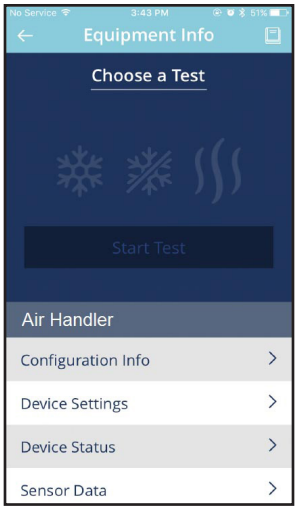

Figure 14

This air handler is Bluetooth ready and functions with the Cool Cloud HVAC phone application designed to improve the contractor's setup / diagnostic experience. Users can see specific model information, review active diagnostic error codes, observe system menu testing of all operational modes (heat / cool / fan) directly from the phone. The phone application is also capable of directly updating the air handler software anytime updates are available. The application will automatically notify the user.

NOTE: The software update may take up to 20 minutes to complete.

16 Quick Start Guide for Communicating Outdoor Units

EXTREMELY IMPORTANT: For all cooling calls the system only requires a single Y input from the thermostat. For all heating calls (including applications with backup electric heater kits) the system only requires a single W input from the thermostat. Internal algorithms will control all available cooling and heating stages based on these inputs. Any single-stage 24VAC thermostat can be used. For proper operation, the thermostat must be setup to control a single stage AC outdoor unit and to control single stage electric heat operation. The control board does not accommodate an O wire thermostat input (reversing valve signal). If a heat pump is installed, the thermostat should be setup as stated above. Setting the thermostat for the heat pump control or multi-stage control may result in incorrect performance.

1. Connect all necessary thermostat wires to the thermostat connector on the air handler control as instructed by the applicable wiring diagrams shown in this section.
2. Connect the 1 & 2 wires between the indoor and outdoor unit for communicating operation. **NOTE**: Verify two stage outdoor units include a 24VAC transformer (for outdoor control board power). Two stage outdoor units may not behave properly without this 24 VAC transformer.

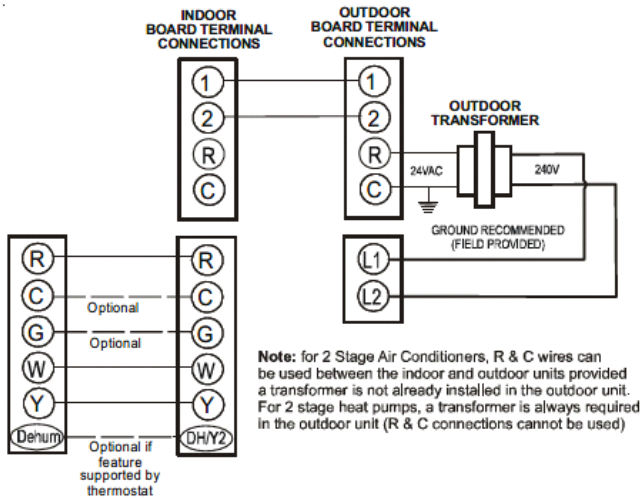

COMMUNICATING TWO-STAGE AIR CONDITIONER OR HEAT PUMP
Figure 15

3. Download the Cool Cloud HVAC phone application for charging and to configure / test system.

NOTE: When new versions of Bluetooth Communication Software and Air Handler Control Software are available, the phone application notifies the user. Software updates are classified as either optional or mandatory and installed by using the phone application. Ensure all mandatory software updates and install if necessary.

16.1 Charging

1. Two-stage outdoor units using the Cool Cloud HVAC application:
   a. Using the cooling icon after entering the outdoor unit menus, energize the outdoor unit at 49% capacity or lower.
   b. Charge the outdoor unit as required using the charging information provided with the outdoor equipment.

17 Quick Start Guide for Non-Communicating Outdoor Units

When setting up a ComfortBridge air handler for use with a Non-Communicating outdoor unit you must set airflow in the "ton" menu on the PCB or in the CoolCloud HVAC APP. Failure to do so will result in the air handler PCB displaying "IdL" and the blower will not operate with a call for cooling. The Board does not need to be replaced, you MUST set the airflow first.

EXTREMELY IMPORTANT: For two stage electric heat kit control the system only needs a single W input. Internal algorithms will control staging automatically based on the single W input. For non-communicating outdoor unit wiring, see instructions below:

1. Use the wiring diagrams on the next page to connect low voltage thermostat wires.

NOTE: When installing the air handler with a non-communicating heat pump, wire directly to the "O" terminal on the non-communicating heat pump. See the following figures.

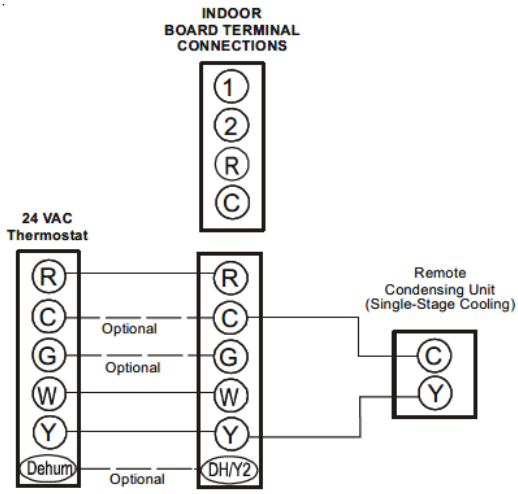

NON-COMMUNICATING SINGLE STAGE A/C
Figure 16

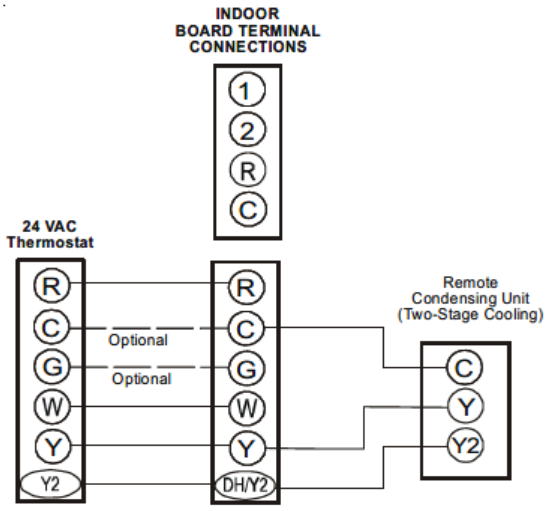

NON-COMMUNICATING TWO STAGE A/C
Figure 17

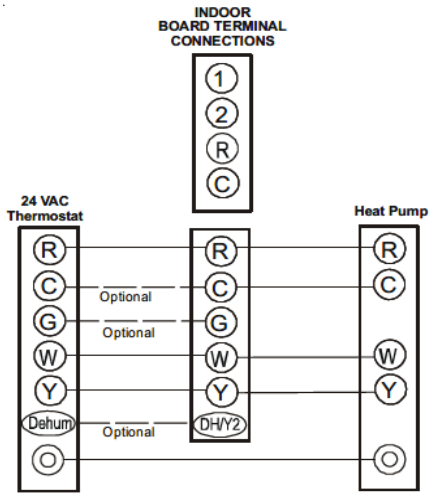

NON-COMMUNICATING SINGLE STAGE HEAT PUMP
Figure 18

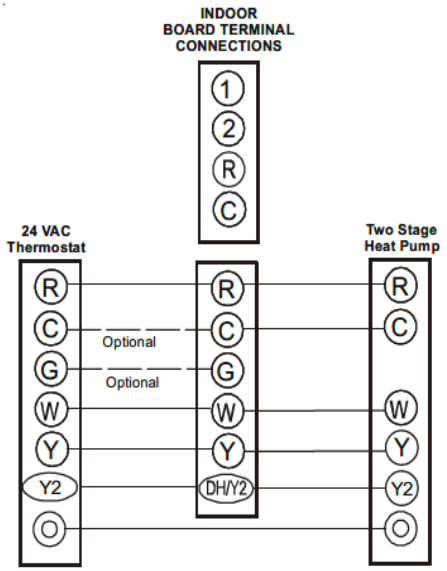

NON-COMMUNICATING TWO STAGE HEAT PUMP
Figure 19

2. Download the Cool Cloud HVAC phone application.

   NOTE: When new versions of Bluetooth Communication Software and Air Handler Control Software are available, the phone application notifies the user. Software updates are classified as either optional or mandatory and installed by using the phone application. Ensure all mandatory software updates have been installed. Review notes for optional software updates and install if necessary.

3. Go to the Non-Comm Outdoor Setting Menu (0d5) using the on board push buttons or the Cool Cloud HVAC phone application. Select " 1AC" for single stage Air Conditioners, " 1HP" for single stage Heat Pumps, "2AC" for two stage Air Conditioners and "2HP" for 2 stage Heat Pumps.

4. Go to the Tonnage Units Menu (ton) and select the tonnage value that corresponds to the desired airflow for the outdoor unit. See the following table.

   NOTE: For the two stage non-communicating outdoor units, system will stage airflow automatically for low stage operation.

Tonnage Selection	Airflow	Tonnage Selection	Airflow	Tonnage Selection	Airflow	Tonnage Selection	Airflow
1	400	2.3	920	3.6	1440	4.9	1960
1.1	440	2.4	960	3.7	1480	5	2000
1.2	480	2.5	1000	3.8	1520	5.1	2040
1.3	520	2.6	1040	3.9	1560	5.2	2080
1.4	560	2.7	1080	4	1600	5.3	2120
1.5	600	2.8	1120	4.1	1640	5.4	2160
1.6	640	2.9	1160	4.2	1680	5.5	2200
1.7	680	3	1200	4.3	1720	5.6	2240
1.8	720	3.1	1240	4.4	1760	5.7	2280
1.9	760	3.2	1280	4.5	1800	5.8	2320
2	800	3.3	1320	4.6	1840	5.9	2360
2.1	840	3.4	1360	4.7	1880	6	2400
2.2	880	3.5	1440	4.8	1920		

NOTE: The system will not provide airflows above the max Airflow Value.

ModelM	AX CFM
AVPTC25B14 AVPTC29B14 AVPTC35B14 AVPTC37B14	1200
AVPTC33C14	1300
AVPTC31C14 AVPTC37C14 AVPTC39C14	1600
AVPTC37D14 AVPTC49C14	1800
AVPTC49D14 AVPTC59C14	1900
AVPTC59D14 AVPTC61D14	2100

5. Use the Cool Cloud HVAC phone application to configure/test **air handler** operations.

NOTE: The phone application cannot test a non- communicating **outdoor unit.** The thermostat will be required for outdoor unit testing.

17.1 Electric Heater Kit Testing

1. Select the electric heat icon after entering the air handler menus while using the Cool Cloud phone application.
2. Select any value less than 50% for low stage operation and any value greater than 50% for high stage operation.
3. Confirm thermostat heating and cooling calls function properly for high stage operation.

18 Dehumidification

Dehumidification allows the air handler's circulator blower to operate at a reduced speed during a combined thermostat call for cooling and a dehumidification call from the thermostat or humidistat. This lower blower speed increases dehumidification of the conditioned air as it passes through the indoor coil. The control board is equipped with a 24 volt dehumidification input (DH) located on the thermostat wiring connector. The terminal can be configured to enable dehumidification when the input is energized or de-energized. When using an external dehumidistat, connect it between the R and DH terminals. If the humidistat closes on humidity rise or the thermostat energizes this terminal when dehumidification is required, set the control board Dehum Logic Menu (dHL) to "Hi" using the push buttons or Cool Cloud HVAC phone application. If the humidistat opens on humidity or the thermostat de-energizes this terminal when dehumidification is required, set the Dehum Logic Menu to "Lo" using the push buttons or Cool Cloud HVAC phone application.

19 Auxiliary Alarm Switch

The control is equipped with a 24VAC Aux Alarm to be used for a condensate switch install (designated by CONDENSATE IN/OUT on the control). By default, the connected AUX switch is normally closed and opens when the water level in the evaporator coil base pan reaches an undesirable level. The control responds by displaying a "EOF" error code and turning off the outdoor condensing unit. If the AUX switch is detected to be in the closed position for 30 seconds, normal operation resumes and the error message is no longer displayed.

20 Start-Up Procedure

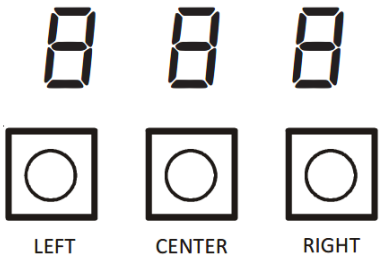

Figure 20

The air handler includes three on-board push buttons allowing users to navigate indoor and outdoor system menus. The Right and Left buttons allow the user to scroll through the main menus and to then scroll through available options within specific menus. The Center button is used to enter into a main menu and to then permanently select options within those menus.

NOTE: After scrolling to the desired option within a menu, that option may be flashing on the 7-segment displays. This indicates the option has not been officially selected. Pressing the Center button two times will select that option. The first press will stop the flashing. The second will make the selection official and return you to the main menu.

22 Dehumidification Control Options

Key Mitigations:

1. Full featured TS (dehum & overcool)
2. Connect G and dehum wire correctly
3. Dehumidistat

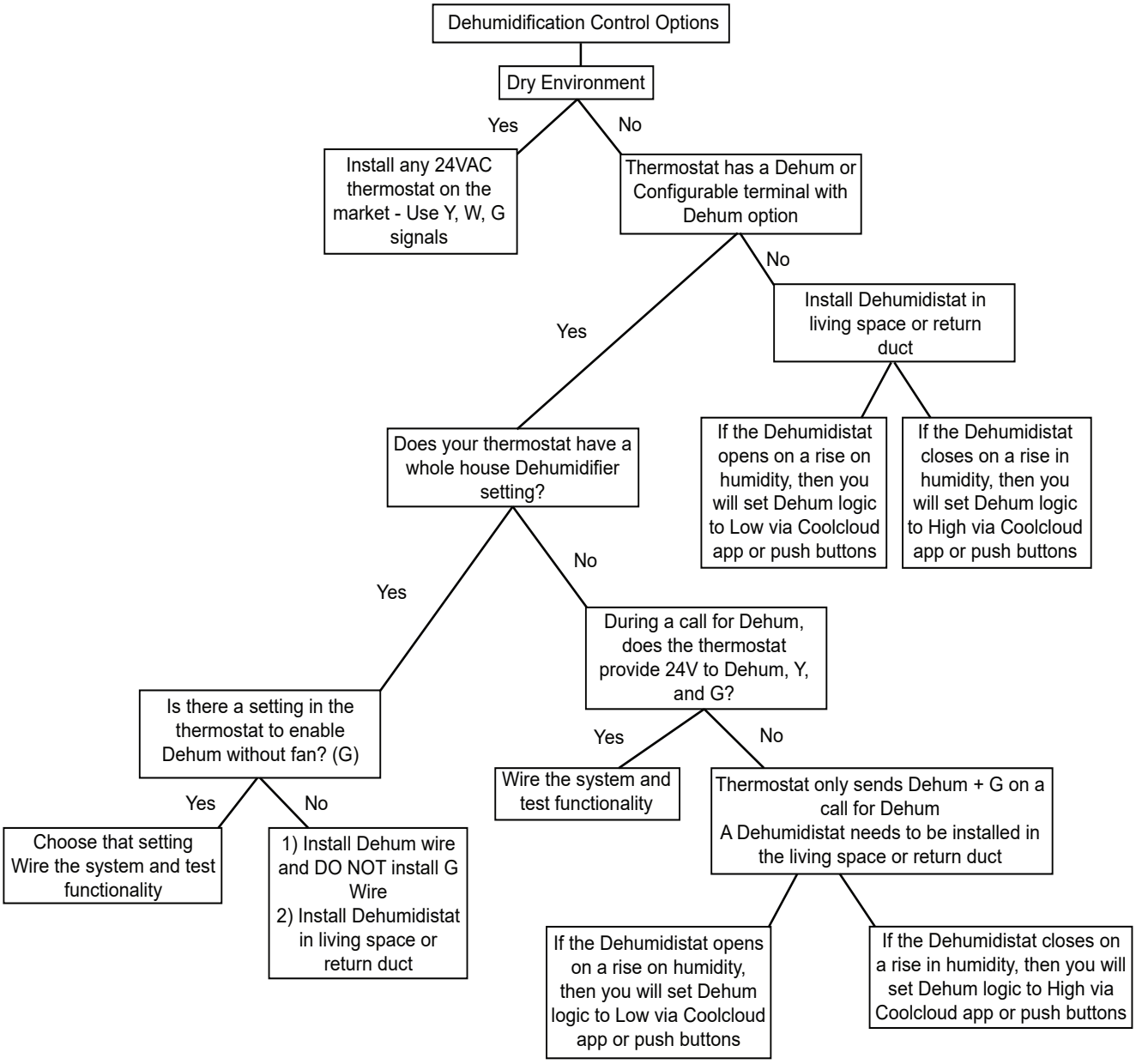

21 Accessory Control (Humidifiers, Dehumidifiers, Ventilators)

If an external humidifier, dehumidifier or ventilator is installed, it may require airflow from the HVAC system to function properly.

1. Make sure the installed 24VAC thermostat is capable of controlling the accessory or accessories.
2. Connect the appropriate accessory control wires to the accessory devices from the thermostat (see thermostat manual for connection and setup instructions).
3. If the thermostat is capable of providing a continuous fan call (G signal) during accessory operation: Make sure to connect the thermostat G terminal to the G terminal on the indoor unit. Setup thermostat to ensure G signal is energized during accessory operation.

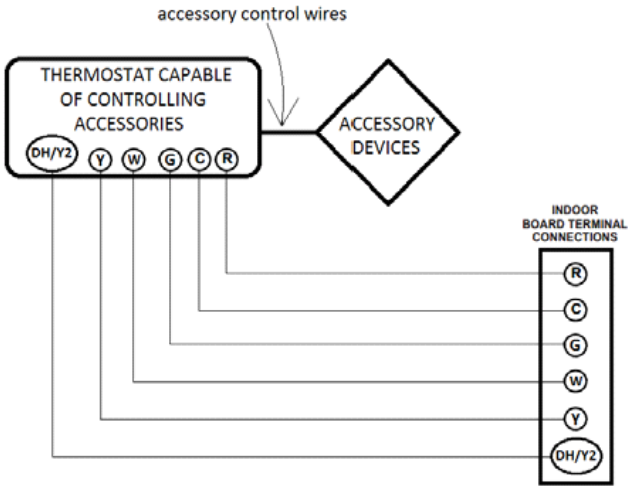

Figure 21

4. Select the appropriate fan only airflow for the accessory using the indoor unit push button menus or the Cool Cloud HVAC phone application.
5. Using the thermostat, independently test each accessory in addition to the independently testing continuous fan mode.

23 Ramping Profiles

The variable-speed circulator offers four different ramping profiles. These profiles may be used to enhance cooling performance and increase comfort level. Select the desired ramping profile using the Cool Cloud phone application or the push button menus.

- Profile A provides only an OFF delay of one (1) minute at 100% of the cooling demand airflow.

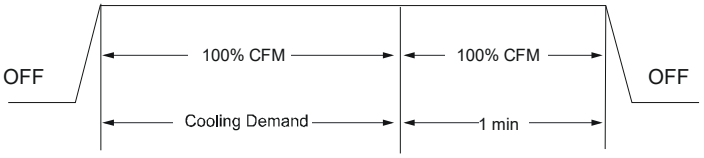

- Profile B ramps up to full cooling demand airflow by first stepping up to 50% of the full demand for 30 seconds. The motor then ramps to 100% of the required airflow. A one (1) minute OFF delay at 100% of the cooling airflow.

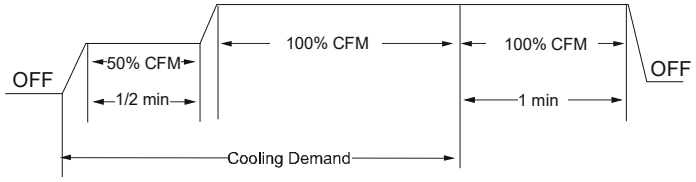

- Profile C ramps up to 82% of the full cooling demand airflow and operates there for approximately 7 ½ minutes. The motor then steps up to the full demand airflow. Profile C also has a one (1) minute 100% OFF delay.

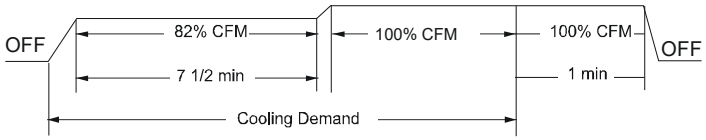

- Profile D ramps up to 50% of the demand for ½ minute, then ramps to 82% of the full cooling demand airflow and operates there for approximately 7 ½ minutes. The motor then steps up to the full demand airflow. Profile D has a ½ minute at 50% airflow OFF delay.

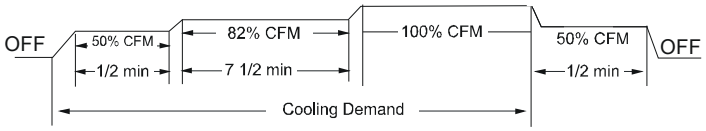

Figure 22

24 Electric Air Cleaner Warning

The control is equipped with an Accessory Relay and a pair of ¼ inch accessory terminals which is normally open, labeled EAC-IN and EAC-OUT (see accessory contacts graphic). The Accessory Relay is configured to close anytime the blower is running. A closed relay means the two terminals will have continuity between them (the control does not energize these contacts). It is recommended to utilize 24VAC with these terminals and limit the current to 1A.

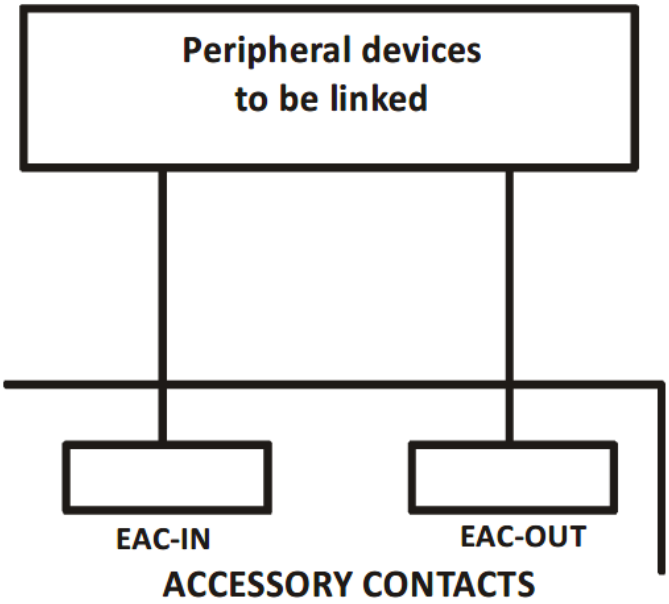

Figure 23

25 Start-Up Procedure

- Prior to start-up, ensure that all electrical connections are properly sized and tightened.
- All panels must be in place and secured. For Air Tight application, neoprene gasket must be positioned at prescribed locations to achieve low airflow as stated in section 13.
- Tubing must be leak free.
- Unit should be elevated, trapped and pitched to allow for drainage.
- Low voltage wiring is connected.
- Auxiliary drain is installed when necessary and pitched to allow for drainage.
- Drain pan and drain tubing has been leak checked.
- Return and supply ducts are sealed.
- Unit is elevated when installed in a garage or where flammable vapors may be present.
- Unit is protected from vehicular or other physical damage.
- Return air is not obtained from any areas where there may be objectionable odors, flammable vapors or products of combustion such as carbon monoxide (CO), which may cause serious personal injury or death.

26 Regular Maintenance

The only item to be maintained on a regular basis by the user is the circulating air filter(s). Filter should be cleaned or replaced regularly. A certified service technician must perform all other services.

NOTE: These instructions are specifically for AVPTC models. Do not use these diagrams for any other models. See separate installation and operating instructions for ATUF, ARUF, ARPT, ADPF, and ASPF models.

NOTICE: This product contains electronic components which require a definite ground. Provisions are made for connection of the ground. A dedicated ground from the main power supply or an earth ground must be provided.

27 Air Handler Troubleshooting Matrix

Symptoms of Abnormal Operation	Diagnostic / Status LED Codes	Fault Description	Possible Causes	Corrective Actions
No outdoor unit operations	EC1	Communication error with outdoor unit	Improper low voltage wiring between the indoor and outdoor unit Outdoor control board lost power duirng operation	Locate and correct improper low voltage wiring issue Identify reason outdoor control board lost power during operation
No Air Handler operation	E05	Open fuse	Short in low voltage wiring	Locate and correct short in low voltage wiring Replace fuse with 3-amp automotive type
No Air Handler operation	E0F	Auxiliary switch (condensate switch) open or open fuse	High water level in the evaporation coil or short in low voltage wiring	Check evaporator drain pan, trap, piping Replace fuse with 3-am automotive type
No Air Handler operation	Ed0	Data not yet on network	No network data	Populate shared data set using memory card
No Air Handler operation	Ed1	Invalid memory card data	Air Handler blower does not contain an appropriate shared data set	Populate correct shared data using memory card
Operation different than expected or no oper	Ed4	Invalid memory card data	Shared data set on memory card has been rejected by integrated control module	Verify shared data set is correct for the specifc model. Re-populate data using correct memory card if required
No Air Handler operation	Eb0	Circulator blower motor not running with demand present	Loose or disconnected wiring connection at circulator motor power leads Open circuit in inductor or loose wiring connection at inductor (3/4 Hp and 1 Hp models only) Failed circulator blower motor	Tighten or correct wiring connection Verify continuous circuit through inductor. Replace if open or short circuit Check circulator blower motor
No Air Handler operation	Eb1	Integrated control module has lost communications with circulator blower motor	Loose wiring connection at circulator motor control leads Failed circulator blower motor Failed integrated control module	Tighten or correct wiring connection Check circulator blower motor, replace if necessary Check integrated control module, replace if necessary
No Air Handler operation	Eb2	Circulator blower motor horse power in shared data set does not match circulator blower motor horse power	Incorrect circulator blower motor in Air Handler Incorrect shared data set in integrated control module	Verify circulator blower if motor horse power is the same specifed for the specifc Air Handler model, replace if necessary Verify shared data set is correct for the specifc model, re-populate data using correct memory card if required
Air Handler operates at reduced performance Airfow delivered is less than expected	Eb3	Circulator blower motor is operating in a power, temperature, or speed limiting condition	Blocked flters Restrictive or undersized ductwork High ambient temperatures	Check filters for blockage, clean flters or remove obstruction Check ductwork for blockage, remove obstruction and verify all registers are fully open Verify ductwork is appropriately sized for system and resize/replace ass needed

27 Air Handler Troubleshooting Matrix (continued)

Symptoms of Abnormal Operation	Diagnostic / Status LED Codes	Fault Description	Possible Causes	Corrective Actions
No Air Handler operation	E64	Circulator blower motor senses a loss of rotor control Circulator blower motor senses high current	Abnormal motor loading, sudden change in speed or torque, sudden blockage of air handler air inlet or outlet	Check filters, filter grills/registers, duct system and air handler inlet/outlet for blockages
No Air Handler operation	E65	Circulator blower motor fails to start 10 consecutive times	Obstruction in circulator blower housing Seized Circulator blower motor bearings Failed circulator blower motor	Check circulator blower for obstructions Remove and repair/replace wheel/motor if necessary Check circulator blower motor shaft rotation and motor, replace motor if necessary
No Air Handler operation	E66	Circulator blower motor shuts down for over or under voltage condition Circulator blower motor shuts down due to over temperature condition on power module	High or low AC line voltage to air handler High ambient temperatures	Check power to air handler Verify line voltage is within the range specified on the rating plate
No Air Handler operation	E67	Circulator blower motor does not have enough information to operate properly Motor fails to start 40 consecutive times	Error with integrated control module shared data	Verify control is populated with the correct shared data
Air Handler operates at reduced performance or operates on low stage when high stage is expected	E69	Airflow is lower than demanded	Blocked filters or restrictive ductwork Undersized ductwork	Check filters for blockage, clean filters or remove obstruction Check ductwork for blockage, remove obstruction and verify all registers are fully open Verify ductwork is appropriately sized for system, resize/replace ductwork if necessary

28 Air Handler Display

LED Display	Menu Description
LGF	View 6 most recent fault codes and Clear Fault Codes if desired (furnace)
Lrn	Restart communications between the indoor and outdoor unit.
Cr	Control Firmware Revision Number
Sr	Control Shared Data Revision Number
FSd	Constant Fan Speed as percent of maximum airflow. Default = 30%
EHt	Electric Heater Kit Wattage (kW)
EFd	Electric Heat Off Delay (seconds)
End	Electric Heat On Delay (seconds)
EtF	Electric Heat Airflow Trim (percentage)
ESt	Percentage of high stage electric heating airflow to run duirng low stage electric heat operation
CFS	1 = system will try to satisfy the thermostat quickly. 5 (default) = system will try to satsify the thermostat more slowly.
dHL	Select "Hi " to enable dehumidification when the thermostat DH terminal is energized. Select "Lo" to enable dehumidification when the thermostat DH terminal is de-energized. (default = Hi)
OdS	Select number of stages for the non-communicating outdoor unit. (1AC for single-stage Air Conditioners, 1HP for single stage Heat Pumps, 2AC for two stage Air Conditioners or 2HP for two stage heat pumps)
ton	Indoor Airflow for non-communicating outdoor units. (values based on 400CFM per ton) (default = 3.0 Ton)
CtF	Cooling Airflow Trim (default 0%)
CAP	Cooling Airflow Profile setting (default = profile D shown as 4)
Cnd	Cooling Airflow On Delay Time (default = 5 seconds)
CFd	Cooling Airflow Off Delay Time. (default = 60 seconds)
CSt	Percentage of high stage cooling airflow to run during low stage operation. (default = 70%)
dHS	Electric heat operation during defrost. 1 = low stage 2 (default) = high stage
HtF	Heat Pump Indoor Airflow Trim (default = 0%)
HFd	Heat Pump Heating Airflow Off Delay Time (default = 60 seconds)
Hnd	Heat Pump Heating Airflow On Delay Time (default = 5 seconds)
HSt	Percentage of high stage heat pump heating airflow to run during low stage operation. (defaullt = 70%)
EHA	When heat pump heating and electric heat are running at the same time, this percentage is used for additional airflow trim
dHE	Enables or disables dehumidification feature in the outdoor unit. (default = Enabled)
CbP	Balance point temperature. The Compressor will not operate below temperature. (Default = 0°F)
EbP	Backup Heat Balance Points
Hdi	Compressor run time between defrost cycles. (default = 30 minutes) (2 stage units)
CdL	Compressor off delay at the beginning and end of a defrost cycle. (default = 30 seconds)

28 Air Handler Display (continued)

LED Display	Menu Description
FCL	View 6 most recent fault codes and Clear Fault Codes if desired (outdoor communicating units)
t9t	Menu is enabled if the CFS menu is set to 6. Select the target time the system will attempt to satisfy the thermostat.
SUP	Menu is enabled if the CFS menu is set to 6. Select the percentage past the target time when the system will enable electric heat operation during heat mode.
Ott	Menu is enabled if the CFS is set to 6. (Electric heat will run during the next heat call if the heat pump fails to satisfy the custom target time for this number of consecutive cycles) (default = 20 cycles)
utt	Menu is enabled if the CFS menu is set to 6. (if the addition of low stage electric heat is able to consecutively satisfy the thermostat under the set target time for this number of cycles, the system will transition to the heat pump for primary heating)
SdP	Menu is enabled if the CFS menu is set to 6. (this percentage will help determine when switching back to heat pump only operation is appropriate. Default = 20%. If target time = 20 minutes, the addtion of low stage electric heat must staisfy the thermostat by less than 16 minutes. (target time - 20% default = 16 minutes).

28 Air Handler Display (continued)

LED Display	Description of System Status
IdL	Idle
FAn	Constant Fan
AC	Compressor Cooling, Single-Stage (non-comm units)
1AC	Compressor Cooling, Low Stage (non-comm units)
2AC	Compressor Cooling, High Stage (non-comm units)
AC 1	Compressor Cooling, Low Stage (comm units)
AC2	Compressor Cooling, High Stage (comm units)
HP	Compressor Heat, Single-Stage (non-comm. units)
1AC	Compressor Heat, Low Stage (non-comm units)
2AC	Compressor Heat, High Stage (non-comm units)
HP 1	Compressor Heat, Low Stage (Comm Units)
HP2	Compressor Heat, High Stage (Comm Units)
Ht	Electric Heat, Single Stage
Ht 1	Electric Heat, Low Stage
Ht2	Electric Heat, High Stage
*dFt	Defrost, Single Stage Electric Heat (non-comm units)
dF 1	Defrost, Low Stage Electric Heat
dF2	Defrost, High Stage Electric Heat
dHU	Dehumidification

* If a system is a heat pump connected legacy, then a DFT will show on the board in 2 instances.

1. If the heat pump calls for a defrost, Y and a W will be energized resulting in a DFT code on the air-handler display.
2. If the heat pump calls for auxiliary heat, Y and a W will be energized resulting in a DFT code on the air-handler display.

29 Air Flow Label

Menu Navigation and Selection Instructions

Using Phone Application over Bluetooth Network:

1) Connect to the air handler (instructions provided by phone during connection process).
2) Select desired settings menu
3) Select item that requires adjustment and make necessary selection
4) Submit Changes

Using On-Board Push Buttons:

1) Use the Right and Left Buttons to scroll between menus
2) Use the Center Button to select desired menu when menu code is shown on 7-segment displays
3) Use the Left and Right Buttons to scroll through options within the desired menu (the display will flash while scrolling through options for selection)
4) Use the Center Button to select the displayed option (when selected the display will stop flashing)
5) Use the Center Button to finalize selection and return to the main menu

Profiles	Pre-Run	Short-Run	OFF Delay
1	--------	--------	60 sec/100%
2	--------	30 sec/50%	60 sec/100%
3	--------	7.5 min/82%	60 sec/100%
4	30 sec/50%	7.5 min/82%	60 sec/100%

Airflow Settings Instructions

1) For non-communicating installations, select the type of unit installed in the OdS menu (1AC = single-stage air conditioner, 1HP = single-stage heat pump, 2AC = 2 stage air conditioner, 2HP = 2 stage heat pump) Default = OFF (no outdoor unit).

2) Use the Tonnage Menu (ton) to select Cooling/Heat Pump Airflow (non-communicating installation). Tonnage selection options and corresponding airflow CFM can be found to the right. [Airflow = Tonnage Selection x 400] Default selection is 6.0 tons.

3) [Optional] Use the Cooling Trim Menu (CtF) to adjust the cooling airflow from -10% to +10% (2% increments). This applies for 2 stage communicating outdoor units and single or 2 stage non-communicating outdoor units.

4) [Optional] Use the Heating Trim Menu (HtF) to adjust the heat pump airflow from -10% to +10% (2% increments). This applies for 2 stage communicating outdoor units and single or 2 stage non-communicating outdoor units.

5) [Optional] Use the Constant Fan Menu (FSD) to select the percentage of maximum airflow for continuous fan

6) [Optional] Use the Cooling Airflow Profile Menu (CAP) to select between 5 cooling airflow profiles. Profile options 1-4 are listed above (option 5 is adjustable). See installation manual for further details

Tonnage Menu (t o n)

Tonnage Selection	Airflow	Tonnage Selection	Airflow
1.0	400	3.5	1400
1.1	440	3.6	1440
1.2	480	3.7	1480
1.3	520	3.8	1520
1.4	560	3.9	1560
1.5	600	4.0	1600
1.6	640	4.1	1640
1.7	680	4.2	1680
1.8	720	4.3	1720
1.9	760	4.4	1760
2.0	800	4.5	1800
2.1	840	4.6	1840
2.2	880	4.7	1880
2.3	920	4.8	1920
2.4	960	4.9	1960
2.5	1000	5.0	2000
2.6	1040	5.1	2040
2.7	1080	5.2	2080
2.8	1120	5.3	2120
2.9	1160	5.4	2160
3.0	1200	5.5	2200
3.1	1240	5.6	2240
3.2	1280	5.7	2280
3.3	1320	5.8	2320
3.4	1360	5.9	2360
3.5	1400	6.0	2400

Maximum Airflow Output

AVPTC25B14 AVPTC29B14 AVPTC35B14 AVPTC37B14	AVPTC33C14	AVPTC31C14 AVPTC37C14 AVPTC39C14	AVPTC37D14 AVPTC49C14	AVPTC49D14 AVPTC59C14	AVPTC59D14 AVPTC61D14
1200	1300	1600	1800	1900	2100

*If airflow is set above the model's maximum value, the output will be the maximum value

Electric Heat Airflow Table

Htr Kw	AVPTC25B14	AVPTC29B14	AVPTC35B14 AVPTC37B14	AVPTC31C14	AVPTC33C14	AVPTC37C14 AVPTC39C14	AVPTC49C14 AVPTC59C14	AVPTC37D14	AVPTC49D14 ++	AVPTC59D14	AVPTC61D14 +++
3	550	550	550	600	600	NR	NR	NR	NR	NR	NR
5	650	650	650	700	700	700	800	870	950	990	1030
6	700	700	700	770	750	770	800	970	1060	1110	1150
8	800	800	800	880	850	880	950	1060	1150	1200	1250
10	850	875	875	970	920	970	1090	1120	1220	1270	1320
15	875	875	1050	1090	950	1090	1290	1220	1520	1520	1650
19	NR	NR	NR	1280	NR	1280	1345	NR	NR	NR	NR
20	NR	NR	NR	NR	NR	NR	NR	1250	NR	1520	1690
21	NR	NR	NR	NR	NR	NR	NR	NR	NR	NR	NR
25	NR	NR	NR	NR	NR	NR	NR	NR	NR	NR	1750

Selecting Heater Kit: Use the Electric Heating Wattage Menu (EHt) to select heater kit size. See "Menu Navigation and Selection Instructions" above. Default selection is 0 (No Heat Kit). Select installed heater kit for heater kit operation.

NR - Not Rated
++ For match up with a 3 ton outdoor unit: Airflow for 5kW up to 15kW heater kits shall be set to 1220 CFM by selecting 10 in the Electric Heating Wattage (EHt) menu.
+++ For match up with a 3.5 ton outdoor unit: Heater kit application shall not exceed 20 kW. Airflow for 5kW up to 20kW heater kits shall be set to 1500 CFM by selecting 8 in the Electric Heating Wattage (EHt) menu.

0140A00615-C

30 Wiring Diagrams

WARNING

HIGH VOLTAGE!
DISCONNECT ALL POWER BEFORE SERVICING OR INSTALLING THIS UNIT. MULTIPLE POWER SOURCES MAY BE PRESENT. FAILURE TO DO SO MAY CAUSE PROPERTY DAMAGE, PERSONAL INJURY OR DEATH.

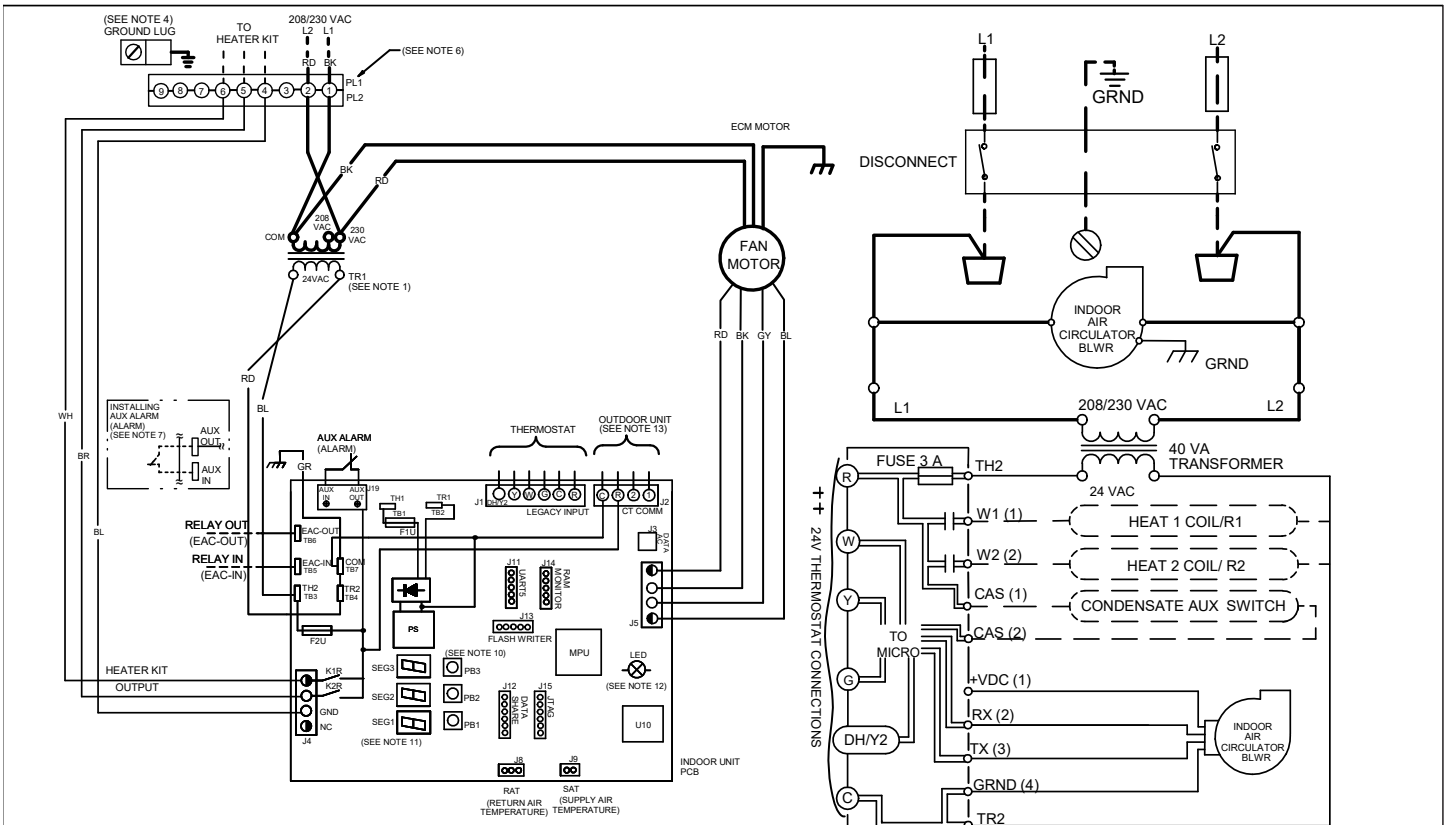

NOTES:

1. PLACE RED WIRE ON 208 V TERMINAL OF TRANSFORMER (TR1) FOR 208 VAC OPERATION.
2. MANUFACTURER'S SPECIFIED REPLACEMENT PARTS MUST BE USED WHEN SERVICING.
3. IF ANY OF THE ORIGINAL WIRES AS SUPPLIED WITH THIS UNIT MUST BE REPLACED, IT MUST BE REPLACED WITH WIRING MATERIAL HAVING A TEMPERATURE RATING OF AT LEAST 105°C. USE COPPER CONDUCTORS ONLY.
4. UNIT MUST BE PERMANENTLY GROUNDED AND CONFORM TO N.E.C AND LOCAL CODES.
6. DISCARD CONNECTOR PL1 WHEN INSTALLING OPTIONAL HEAT KIT.
7. REMOVE JUMPER TAB AND PUT AUX ALARM SWITCH WHEN INSTALLING AUX ALARM SWITCH.
9. USE N.E.C CLASS 2 WIRE.
10. SEE MANUAL FOR PUSH BUTTON OPERATION.
11. SEE MANUAL FOR 7-SEGMENT DISPLAY DIAGNOSTIC CODES AND MENU CODES
12. SEE MANUAL FOR LED FUNCTIONALITY.
13. R AND C TERMINALS (USED FOR 24VAC OUTDOOR CONTROL VOLTAGE) ARE OPTIONAL FOR 2 STAGE COMMUNICATING AIR CONDITIONERS. R AND C TERMINALS ARE NOT TO BE USED FOR 2 STAGE COMMUNICATING HEAT PUMP APPLICATIONS.

    FOR COMMUNICATING HEAT PUMPS OR IF ONLY TWO THERMOSTAT WIRES ARE AVAILABLE, A SEPARATE TRANSFORMER MUST BE INSTALLED IN THE OUTDOOR UNIT FOR CONTROL BOARD POWER.

    1 AND 2 WIRES ARE REQUIRED FOR ALL APPLICATIONS. SEE INSTALLATION MANUAL FOR FULL SYSTEM WIRING EXAMPLES.

INTEGRATED CONTROL:

- LOW VOLTAGE
- LOW VOLTAGE FIELD
- HIGH VOLTAGE
- HIGH VOLTAGE FIELD
- JUNCTION
- TERMINAL
- INTERNAL TO
- RESISTOR
- OVERCURRENT PROT. DEVICE
- PLUG CONNECTION
- EQUIPMENT GND
- FIELD GROUND

COLOR CODES:

- BL - BLUE
- RD - RED
- YL - YELLOW
- OR - ORANGE
- BK - BLACK
- GY - GREY
- BR - BROWN
- GR - GREEN
- PU - PURPLE
- WH - WHITE

COMPONENT CODES:

- PL1, PL2 — POWER/HEATER CONNECTOR
- TL — THERMAL LIMIT
- TR — TRANSFORMER
- F1U, F2U — FUSE LINK
- PL3, PL4 — TRANSFORMER CONNECTOR

0140A00716-A

Wiring is subject to change. Always refer to the wiring diagram on the unit for the most up-to-date wiring.

WARNING

HIGH VOLTAGE!
DISCONNECT ALL POWER BEFORE SERVICING OR INSTALLING THIS UNIT. MULTIPLE POWER SOURCES MAY BE PRESENT. FAILURE TO DO SO MAY CAUSE PROPERTY DAMAGE, PERSONAL INJURY OR DEATH.

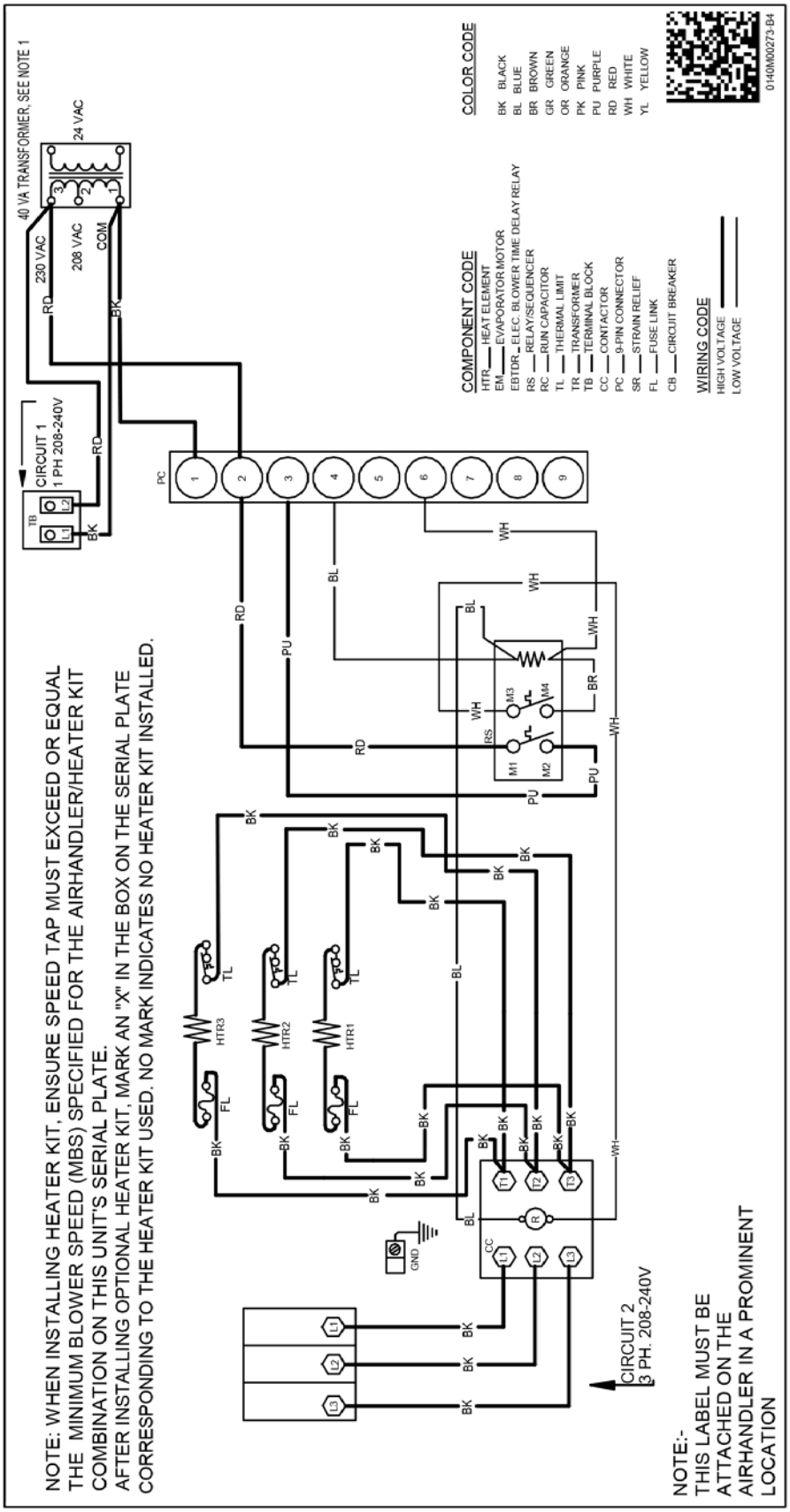

Wiring is subject to change. Always refer to the wiring diagram on the unit for the most up-to-date wiring.

AIR HANDLER

AIR HANDLER HOMEOWNER'S ROUTINE MAINTENANCE RECOMMENDATIONS

*We strongly recommend a bi-annual maintenance checkup be performed before the heating and cooling seasons begin by a **qualified servicer**.*

REPLACE OR CLEAN FILTER

IMPORTANT NOTE: Never operate unit without a filter installed as dust and lint will build up on internal parts resulting in loss of efficiency, equipment damage and possible fire.

An indoor air filter must be used with your comfort system. A properly maintained filter will keep the indoor coil of your comfort system clean. A dirty coil could cause poor operation and/or severe equipment damage.

Your air filter or filters could be located in your furnace, in a blower unit, or in "filter grilles" in your ceiling or walls. The installer of your air conditioner or heat pump can tell you where your filter(s) are, and how to clean or replace them.

Check your filter(s) at least once a month. When they are dirty, replace or clean as required. Disposable type filters should be replaced. Reusable type filters may be cleaned.

You may want to ask your dealer about high efficiency filters. High efficiency filters are available in both electronic and non-electronic types. These filters can do a better job of catching small airborne particles.

MOTORS

Indoor and outdoor fan motors are permanently lubricated and do not require additional oiling.

WARNING

HIGH VOLTAGE

DISCONNECT ALL POWER BEFORE SERVICING OR INSTALLING THIS UNIT. MULTIPLE POWER SOURCES MAY BE PRESENT. FAILURE TO DO SO MAY CAUSE PROPERTY DAMAGE, PERSONAL INJURY OR DEATH.

ALUMINUM INDOOR COIL CLEANING

(QUALIFIED SERVICER ONLY)

This unit is equipped with an aluminum tube evaporator coil. The safest way to clean the evaporator coil is to simply flush the coil with water. This cleaning practice remains as the recommended cleaning method for both copper tube and aluminum tube residential evaporator coils.

It has been determined that many coil cleaners and drain pan tablets contain corrosive chemicals that can be harmful to aluminum tube and fin evaporator coils. Even a one time application of these corrosive chemicals can cause premature aluminum evaporator coil failure. Any cleaners that contain corrosive chemicals including, but not limited to, chlorine and hydroxides, should not be used.

An alternate cleaning method is to use one of the products listed in TP-109* to clean the coils. The cleaners listed are the only agents deemed safe and approved for use to clean round tube aluminum coils. TP-109 is also available on the web site in Partner Link > Service Toolkit.

NOTE: Ensure coils are rinsed well after use of any chemical cleaners.

CAUTION

TO AVOID THE RISK OF EQUIPMENT DAMAGE OR FIRE, INSTALL THE SAME AMPERAGE BREAKER OR FUSE AS YOU ARE REPLACING. IF THE CIRCUIT BREAKER OR FUSE SHOULD OPEN AGAIN WITHIN THIRTY DAYS, CONTACT A QUALIFIED SERVICER TO CORRECT THE PROBLEM. IF YOU REPEATEDLY RESET THE BREAKER OR REPLACE THE FUSE WITHOUT HAVING THE PROBLEM CORRECTED, YOU RUN THE RISK OF SEVERE EQUIPMENT DAMAGE.

BEFORE YOU CALL YOUR SERVICER

- Check the thermostat to confirm that it is properly set.
- Wait 15 minutes. Some devices in the outdoor unit or in programmable thermostats will prevent compressor operation for awhile, and then reset automatically. Also, some power companies will install devices which shut off air conditioners for several minutes on hot days. If you wait several minutes, the unit may begin operation on its own.
- Check the electrical panel for tripped circuit breakers or failed fuses. Reset the circuit breakers or replace fuses as necessary.
- Check the disconnect switch near the indoor furnace or blower to confirm that it is closed.
- Check for obstructions on the outdoor unit . Confirm that it has not been covered on the sides or the top. Remove any obstruction that can be safely removed. If the unit is covered with dirt or debris, call a qualified servicer to clean it.
- Check for blockage of the indoor air inlets and outlets. Confirm that they are open and have not been blocked by objects (rugs, curtains or furniture).
- Check the filter. If it is dirty, clean or replace it.
- Listen for any unusual noise(s), other than normal operating noise, that might be coming from the outdoor unit. If you hear unusual noise(s) coming from the unit, call a qualified servicer.

31 Start-up Checklist

Air Handler / Coil				
	Model Number	_____		
	Serial Number	_____		
ELECTRICAL				
Line Voltage (Measure L1 and L2 Voltage)	L1 - L2	_____		
Secondary Voltage (Measure Transformer Output Voltage)	R - C	_____		
Blower Amps		_____		
Heat Strip 1 - Amps		_____		
Heat Strip 2 - Amps		_____		
BLOWER EXTERNAL STATIC PRESSURE				
Return Air Static Pressure		_____	IN. W.C.	
Supply Air Static Pressure		_____	IN. W.C.	
Total External Static Pressure (Ignoring +/- from the reading above, add total here)		_____	IN. W.C.	
TEMPERATURES				
Return Air Temperature (Dry bulb / Wet bulb)		_____	DB °F	_____ WB °F
Cooling Supply Air Temperature (Dry bulb / Wet bulb)		_____	DB °F	_____ WB °F
Heating Supply Air Temperature		_____	DB °F	
Temperature Rise		_____	DB °F	
Delta T (Difference between Supply and Return Temperatures)		_____	DB °F	

Air Handler / Coil - (Inverter Matched)	
INVERTER AH / COIL ONLY	
Check EEV and EEV wiring is secure (no adjustment required)	_____

Additional Checks	
Check wire routings for any rubbing	_____
Check product for proper draining	_____
Check screw tightness on blower wheel	_____
Check factory wiring and wire connections	_____
Check product for proper clearances as noted by installtion instructions	_____

°F to °C formula: (°F - 32) divided by 1.8 = °C **°C to °F formula: (°C multiplied by 1.8) + 32 = °F**

THIS PAGE IS LEFT INTENTIONALLY BLANK.

CUSTOMER FEEDBACK
We are very interested in all product comments.
Please fill out the feedback form on one of the following links:
Goodman® Brand Products: (http://www.goodmanmfg.com/about/contact-us).
Amana® Brand Products: (http://www.amana-hac.com/about-us/contact-us).
You can also scan the QR code on the right for the product brand you purchased to be directed to the feedback page.

GOODMAN® BRAND

AMANA® BRAND

PRODUCT REGISTRATION
Thank you for your recent purchase. Though not required to get the protection of the standard warranty, registering your product is a relatively short process, and entitles you to additional warranty protection, except that failure by California and Quebec residents to register their product does not diminish their warranty rights. The duration of warranty coverages in Texas differs in some cases.

For Product Registration, please register as follows:
Goodman® Brand products: (https://www.goodmanmfg.com/product-registration).
Amana® Brand products: (http://www.amana-hac.com/product-registration).
You can also scan the QR code on the right for the product brand you purchased to be directed to the Product Registration page.

GOODMAN® BRAND

AMANA® BRAND

Our continuing commitment to quality products may mean a change in specifications without notice.

© 2018-2021, 2023 Daikin Comfort Technologies Manufacturing, L.P.
19001 Kermier Rd., Waller, TX 77484
www.goodmanmfg.com - or - www.amana-hac.com

Amana® is a registered trademark of Maytag Corporation or its related companies and is used under license. All rights reserved.