AVPEC

AIR HANDLERS
INSTALLATION & OPERATING INSTRUCTIONS

© 2016-2017 Goodman Manufacturing Company, L.P.
5151 San Felipe, Suite 500, Houston, TX 77056
www.goodmanmfg.com - or - www.amana-hac.com
P/N: IOA-4018B Date: December 2017

1 Important Safety Instructions ---- 2
2 Shipping Inspection ---- 3
2.1 Parts ---- 3
2.2 Handling ---- 3
3 Codes & Regulations ---- 3
4 Replacement Parts ---- 3
5 Pre-Installation Considerations ---- 3
5.1 Preparation ---- 3
5.2 System Matches ---- 3
5.3 Interconnecting Tubing ---- 3
5.4 Clearances ---- 3
5.5 Horizontal Applications ---- 4
6 Installation Location ---- 4
6.1 Upflow Installation ---- 4
6.2 Horizontal Left Installation ---- 4
6.3 Downflow/Horizontal Right Installation ---- 4
7 Refrigerant Lines ---- 7
7.1 Tubing Size ---- 7
7.2 Tubing Preparation ---- 7
7.3 Tubing Connections ---- 7
8 Condensate Drain Lines ---- 8
9 Ductwork ---- 9
9.1 Return Ductwork ---- 9
10 Return Air Filters ---- 9
11 Electric Heat ---- 9
12 Electrical and Control Wiring ---- 11
12.1 Building Electrical Service Inspection ---- 11
12.2 Wire Sizing ---- 11
12.3 Maximum Overcurrent Protection (MOP) ---- 11
12.4 Electrical Connections – Supply Voltage ---- 12
12.4.1 Air Handler Only (Non-Heat Kit Models) ---- 12
12.4.2 Air Handler - Non-Circuit Breaker Heat Kits ---- 12
12.4.3 Air Handler With Circuit Breaker Heat Kit ---- 12
13 Achieving 1.4% & 2% Low Leakage Rate ---- 12
14 Miscellaneous Start-Up Checklist ---- 12
14.1 Auxiliary Alarm Switch ---- 14
14.2 Circulator Blower ---- 14
14.3 AVPEC Motor Orientation ---- 14
14.4 Accessory Contacts ---- 14
15 Troubleshooting ---- 15
15.1 Electrostatic Discharge (ESD) Precautions ---- 15
15.2 Diagnostic Chart ---- 15
15.3 Fault Recall ---- 16
15.4 Dehumidification ---- 16
16 ComfortNet™ System ---- 17
16.1 Overview ---- 17
16.2 Airflow Consideration ---- 17
16.3 CTK04 Thermostat Wiring ---- 19
16.3.1 Two-Wire Outdoor and Four-Wire Indoor Wiring. ---- 19
16.4 ComfortNet™ System Advanced Features ---- 19
16.5 Network Troubleshooting ---- 19
16.6 System Troubleshooting ---- 20
17 Directions to ComfortNet System Advanced Feature Menus ---- 20
17.2 Diagnostics ---- 20
17.3 Identification ---- 20
17.4 Set-Up ---- 20
17.5 Status ---- 21
Troubleshooting ---- 23
setting the mode display ---- 24
Diagnostic Codes ---- 25
SETTING THE MODE DISPLAY ---- 27

⚠ WARNING

ONLY PERSONNEL THAT HAVE BEEN TRAINED TO INSTALL, ADJUST, SERVICE OR REPAIR (HEREINAFTER, "SERVICE") THE EQUIPMENT SPECIFIED IN THIS MANUAL SHOULD SERVICE THE EQUIPMENT. THE MANUFACTURER WILL NOT BE RESPONSIBLE FOR ANY INJURY OR PROPERTY DAMAGE ARISING FROM IMPROPER SERVICE OR SERVICE PROCEDURES. IF YOU SERVICE THIS UNIT, YOU ASSUME RESPONSIBILITY FOR ANY INJURY OR PROPERTY DAMAGE WHICH MAY RESULT. IN ADDITION, IN JURISDICTIONS THAT REQUIRE ONE OR MORE LICENSES TO SERVICE THE EQUIPMENT SPECIFIED IN THIS MANUAL, ONLY LICENSED PERSONNEL SHOULD SERVICE THE EQUIPMENT. IMPROPER INSTALLATION, ADJUSTMENT, SERVICING OR REPAIR OF THE EQUIPMENT SPECIFIED IN THIS MANUAL, OR ATTEMPTING TO INSTALL, ADJUST, SERVICE OR REPAIR THE EQUIPMENT SPECIFIED IN THIS MANUAL WITHOUT PROPER TRAINING MAY RESULT IN PRODUCT DAMAGE, PROPERTY DAMAGE, PERSONAL INJURY OR DEATH.

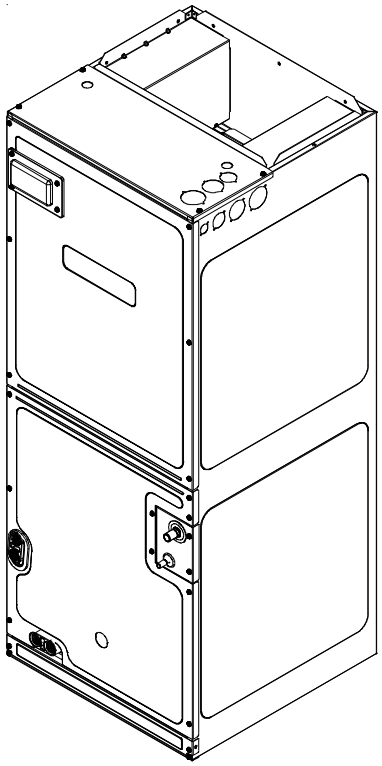

ATTENTION
INSTALLING PERSONNEL:

Prior to installation, thoroughly familiarize yourself with this Installation Manual. Observe all safety warnings. During installation or repair, caution is to be observed. It is your responsibility to install the product safely and to educate the customer on its safe use.

Amana is a registered trademark of Maytag Corporation or its related companies and is used under license. All rights reserved.

1 IMPORTANT SAFETY INSTRUCTIONS

The following symbols and labels are used throughout this manual to indicate immediate or potential safety hazards. It is the owner's and installer's responsibility to read and comply with all safety information and instructions accompanying these symbols. Failure to heed safety information increases the risk of personal injury, property damage, and/or product damage.

CAUTION

When installing or servicing this equipment, safety clothing, including hand and eye protection, is strongly recommended. If installing in an area that has special safety requirements (hard hats, etc.), observe these requirements.

NOTICE: THIS PRODUCT CONTAINS ELECTRONIC COMPONENTS WHICH REQUIRE A DEFINITE GROUND. PROVISIONS ARE MADE FOR CONNECTION OF THE GROUND. A DEDICATED GROUND FROM THE MAIN POWER SUPPLY OR AN EARTH GROUND MUST BE PROVIDED

WARNING

HIGH VOLTAGE!
Disconnect ALL power before servicing or installing this unit. Multiple power sources may be present. Failure to do so may cause property damage, personal injury or death.

WARNING

This product is factory-shipped for use with 208/240/1/60 electrical power supply. DO NOT reconfigure this air handler to operate with any other power supply.

RECOGNIZE THIS SYMBOL AS A SAFETY PRECAUTION.

NOTICE

If an "Ed" error is encountered on startup, verify that the electric heater DIP switches have been set to the appropriate heater size. See Tables 8 and 9 for the heater kit airflow delivery and DIP switch settings.

WARNING

DO NOT CONNECT TO OR USE ANY DEVICE THAT IS NOT DESIGN CERTIFIED BY THE MANUFACTURER FOR USE WITH THIS UNIT. SERIOUS PROPERTY DAMAGE, PERSONAL INJURY, REDUCED UNIT PERFORMANCE AND/OR HAZARDOUS CONDITIONS MAY RESULT FROM THE USE OF SUCH NON-APPROVED DEVICES.

WARNING

To prevent the risk of property damage, personal injury, or death, do not store combustible materials or use gasoline or other flammable liquids or vapors in the vicinity of this unit.

WARNING

To avoid property damage, personal injury or death due to electrical shock, this unit MUST have an uninterrupted, unbroken electrical ground. The electrical ground circuit may consist of an appropriately sized electrical wire connecting the ground lug in the unit control box to the building electrical service panel.

Other methods of grounding are permitted if performed in accordance with the National Electric Code (NEC)/American National Standards Institute (ANSI)/National Fire Protection Association (NFPA) 70 and local/state codes. In Canada, electrical grounding is to be in accordance with the Canadian Electric Code (CSA) C22.1.

WARNING

Failure to properly reconnect sensor wires may result in Error codes and the unit not operating.

DANGER
PELIGRO

CARBON MONOXIDE POISONING HAZARD

Special Warning for Installation of Furnace or Air Handling Units in Enclosed Areas such as Garages, Utility Rooms or Parking Areas

Carbon monoxide producing devices (such as an automobile, space heater, gas water heater, etc.) should not be operated in enclosed areas such as unventilated garages, utility rooms or parking areas because of the danger of carbon monoxide (CO) poisoning resulting from the exhaust emissions. If a furnace or air handler is installed in an enclosed area such as a garage, utility room or parking area and a carbon monoxide producing device is operated therein, there must be adequate, direct outside ventilation.

This ventilation is necessary to avoid the danger of CO poisoning which can occur if a carbon monoxide producing device continues to operate in the enclosed area. Carbon monoxide emissions can be (re)circulated throughout the structure if the furnace or air handler is operating in any mode.

CO can cause serious illness including permanent brain damage or death. B10259-216

RIESGO DE INTOXICACIÓN POR MONÓXIDO DE CARBONO

Advertencia especial para la instalación de calentadores ó manejadoras de aire en áreas cerradas como estacionamientos ó cuartos de servicio.

Los equipos ó aparatos que producen monóxido de carbono (tal como automóvil, calentador de gas, calentador de agua por medio de gas, etc) no deben ser operados en áreas cerradas debido al riesgo de envenenamiento por monóxido de carbono (CO) que resulta de las emisiones de gases de combustión. Si el equipo ó aparato se opera en dichas áreas, debe existir una adecuada ventilación directa al exterior.

Esta ventilación es necesaria para evitar el peligro de envenenamiento por CO, que puede ocurrir si un dispositivo que produce monóxido de carbono sigue operando en el lugar cerrado.

Las emisiones de monóxido de carbono pueden circular a través del aparato cuando se opera en cualquier modo.

El monóxido de carbono puede causar enfermedades severas como daño cerebral permanente ó muerte. B10259-216

RISQUE D'EMPOISONNEMENT AU MONOXYDE DE CARBONE

Avertissement special au sujet de l'installation d'appareils de chauffage ou de traitement d'air dans des endroits clos, tets les garages, les locaux d'entretien et les stationnements.

Evitez de mettre en marche les appareils produisant du monoxyde de carbone (tels que les automobile, les appareils de chauffage autonome,etc.) dans des endroits non ventilés tels que les d'empoisonnement au monoxyde de carbone. Si vous devez faire fonctionner ces appareils dans un endroit clos, assures-vous qu'il y ait une ventilation directe provenant de l'exterier.

Cette ventilation est nécessaire pour éviter le danger d'intoxication au CO pouvant survenir si un appareil produisant du monoxyde de carbone continue de fonctionner au sein de la zone confinée.

Les émissions de monoxyde de carbone peuvent etre recircules dans les endroits clos, si l'appareil de chauffage ou de traitement d'air sont en marche.

Le monoxyde de carbone peut causer des maladies graves telles que des dommages permanents au cerveau et meme la mort. B10259-216

2 SHIPPING INSPECTION

Always transport the unit upright; laying the unit on its side or top during transit may cause equipment damage. The installer should inspect the product upon receipt for shipping damage and subsequent investigation is the responsibility of the carrier. The installer must verify the model number, specifications, electrical characteristics, and accessories are correct prior to installation. The distributor or manufacturer will not accept claims from dealers for transportation damage or installation of incorrectly shipped units.

2.1 Parts

Also inspect the unit to verify all required components are present and intact. Report any missing components immediately to Daikin or to the distributor. Use only factory authorized replacement parts (see Section 4). Make sure to include the full product model number and serial number when reporting and/or obtaining service parts.

2.2 Handling

Use caution when transporting/carrying the unit. Do not move unit using shipping straps. Do not carry unit with hooks or sharp objects. The preferred method of carrying the unit after arrival at the job site is to carry via a two-wheel hand truck from the back or sides or via hand by carrying at the cabinet corners.

3 CODES & REGULATIONS

This product is designed and manufactured to comply with applicable national codes. Installation in accordance with such codes and/or prevailing local codes/regulations is the responsibility of the installer. The manufacturer assumes no responsibility for equipment installed in violation of any codes or regulations.

The United States Environmental Protection Agency (EPA) has issued various regulations regarding the introduction and disposal of refrigerants. Failure to follow these regulations may harm the environment and can lead to the imposition of substantial fines. Should you have any questions please contact the local office of the EPA and/or refer to EPA's website www.epa.gov.

4 REPLACEMENT PARTS

When reporting shortages or damages, or ordering repair parts, give the complete product model and serial numbers as stamped on the product. Replacement parts for this product are available through your contractor or local distributor. For the location of your nearest distributor consult the white business pages, the yellow page section of the local telephone book or contact:

HOMEOWNER SUPPORT
GOODMAN MANUFACTURING COMPANY, L.P.
19001 KERMIER ROAD
WALLER, TEXAS 77484
855-770-5678

5 PRE-INSTALLATION CONSIDERATIONS

5.1 Preparation

Keep this document with the unit. Carefully read all instructions for the installation prior to installing product. Make sure each step or procedure is understood and any special considerations are taken into account before starting installation. Assemble all tools, hardware and supplies needed to complete the installation. Some items may need to be purchased locally. Make sure everything needed to install the product is on hand before starting.

5.2 System Matches

The entire system (combination of indoor and outdoor sections) must be manufacturer approved and Air-Conditioning, Heating, and Refrigeration Institute (AHRI) listed. **NOTE:** Installation of unmatched systems is not permitted. Damage or repairs due to installation of unmatched systems is not covered under the warranty.

5.3 Interconnecting Tubing

Give special consideration to minimize the length of refrigerant tubing when installing air handlers. Refer to outdoor AIR CONDITIONING OR HEAT PUMP INSTALLATION & SERVICE REFERENCE for line set configuration guidelines. If possible, allow adequate length of tubing such that the coil may be removed (for inspection or cleaning services) from the cabinet without disconnecting the tubing.

5.4 Clearances

The unit clearance from a combustible surface may be 0". However, service clearance must take precedence. A minimum of 24" in front of the unit for service clearance is required. Additional clearance on one side or top will be required for electrical wiring connections. Consult all appropriate regulatory codes prior to determining final clearances. When installing this unit in an area that may become wet (such as crawl spaces), elevate the unit with a sturdy, non-porous material. In installations that may lead to physical damage (i.e. a garage) it is advised to install a protective barrier to prevent such damage. Always install units such that a positive slope in condensate line (1/4" per foot) is allowed.

5.5 Horizontal Applications

If installed above a finished living space a secondary drain pan, as required by many building codes, must be installed under the entire unit and its condensate drain line must be routed to a location such that the user will see the condensate discharge.

6 INSTALLATION LOCATION

NOTE: These air handlers are designed for ***indoor installation only***.

The AVPEC product line may be installed in one of the upflow, downflow, horizontal left or horizontal right orientations as shown in Figures 3, 4, 5 and 6. The unit may be installed in upflow or horizontal left orientation as shipped (refer to specific sections for more information).

Minor field modifications are necessary to convert to downflow or horizontal right as indicated in below sections.

6.1 Upflow Installation

No field modifications are mandatory however to obtain maximum efficiency, the horizontal drip shield, side drain pan and drain pan extension, can be removed.

Side Drain Pan and Extension Removal: Refer to Figure 1, remove the two (2) screws that secure the drip shield support brackets to the condensate collectors (front and back). Unsnap the side drain pan from the bottom drain pan using a screw driver or any small lever. The side drain pan, drip shield brackets and the drain pan extension may now be removed. From Figure 1, drain port labeled (A) is the primary drain for this application and condensate drain line must be attached to this drain port. Drain port (a) is for the secondary drain line (if used).

6.2 Horizontal Left Installation

No field modifications are permissible for this application.

Drain port labeled (B) in Figure 1 is the primary drain for this application and condensate drain line must be attached to this drain port. Drain port (b) is for the secondary drain line (if used).

In applications where the air handler is installed in the horizontal left position (←), and the return air environment see humidity levels above 65% relative humidity coupled with total external static levels above 0.5" e.s.p., a condensate kit is available for field application. Kit nomenclature can be found in the table 1.

6.3 Downflow/Horizontal Right Installation

IMPORTANT NOTE: In the downflow application, to prevent coil pan "sweating", a downflow kit (DFK) is available through your local Daikin distributor. The DFK is not supplied with the air handler and is required to minimize pan sweating on all downflow installations. See Table 2 for the correct DFK and follow the instructions provided for installation.

Refer to Figure 7 and 8 for the location of the components referenced in the following steps.

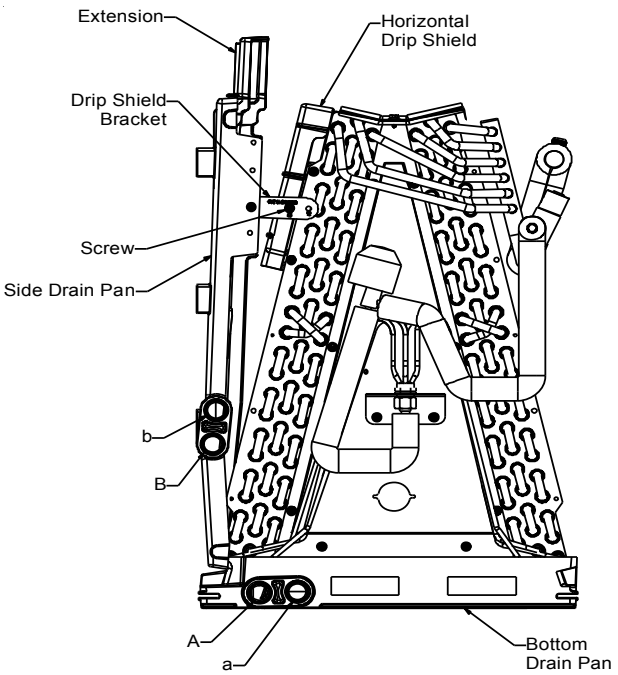

DRIP SHIELD REMOVAL

Figure 1

CMK0008 Condensate	CMK0009 Condensate	CMK0010 Condensate	CMK0011 Condensate
AVPEC25B14	AVPEC37C14	AVPEC59D14	AVPEC61D14

CONDENSATE KIT

Table 1

DFK-B Downflow Kit	DFK-C Downflow Kit	DFK-D Downflow Kit
AVPEC25B14	AVPEC37C14	AVPEC59D14 AVPEC61D14

DOWNFLOW KIT

Table 2

1. Before flipping the air handler, remove blower access panel and coil access panel. The coil access panel and tubing panel may remain screwed together during this procedure. Remove and retain the seven (7) screws securing the coil access panel to the cabinet and the six (6) screws securing the blower access panel to the cabinet.

2. Before removing the coil remove the wire ties holding the sensor wire harness to the center support. Remove the insulation covering the wire connectors and disconnect the wires. Do not cut or damage the insulation covering the junction connectors since it will be required to secure the wires once the change is complete. See FigureS 2-1 and 2-2 for wire tie location.

NOTE: DO NOT USE MANIFOLDS OR FLOWRATOR TO PULL THE COIL ASSEMBLY OUT. FAILURE TO DO SO MAY RESULT IN BRAZE JOINT DAMAGE AND LEAKS.

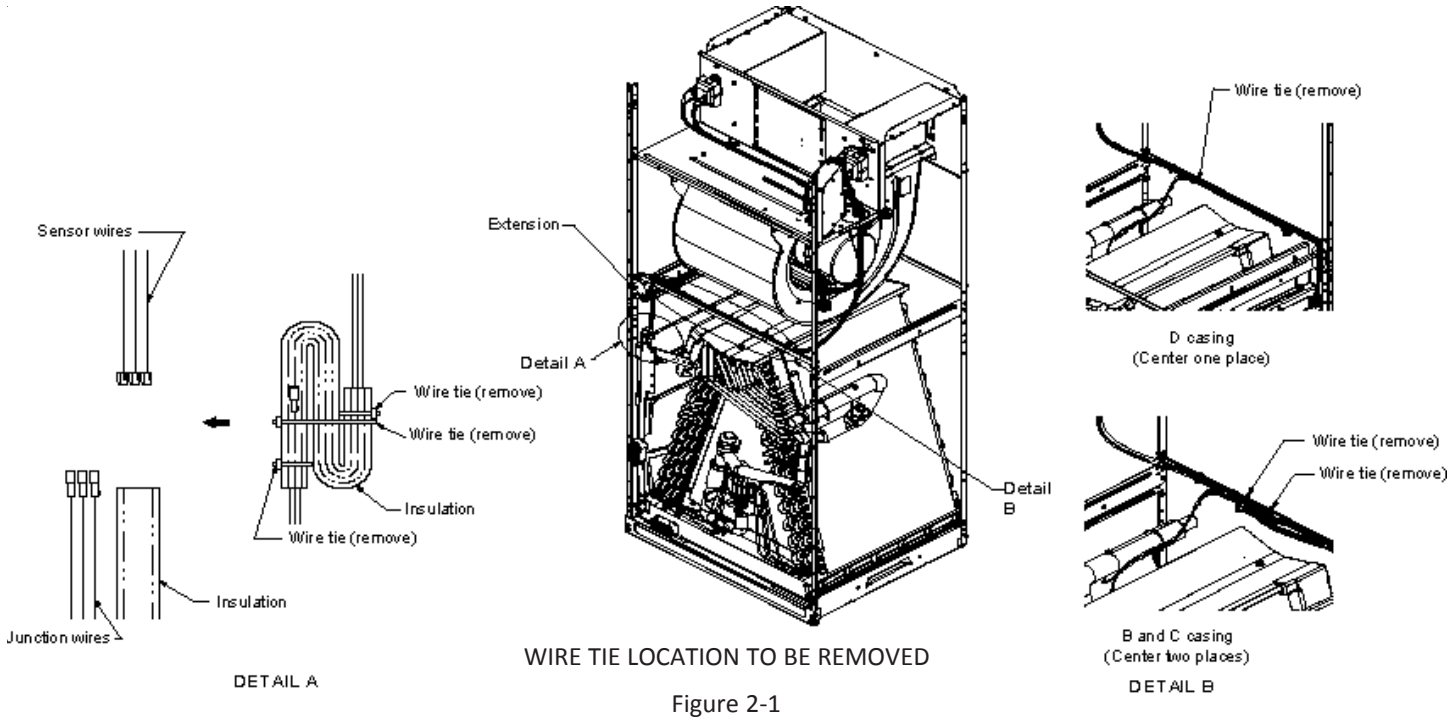

WIRE TIE LOCATION TO BE REMOVED

Figure 2-1

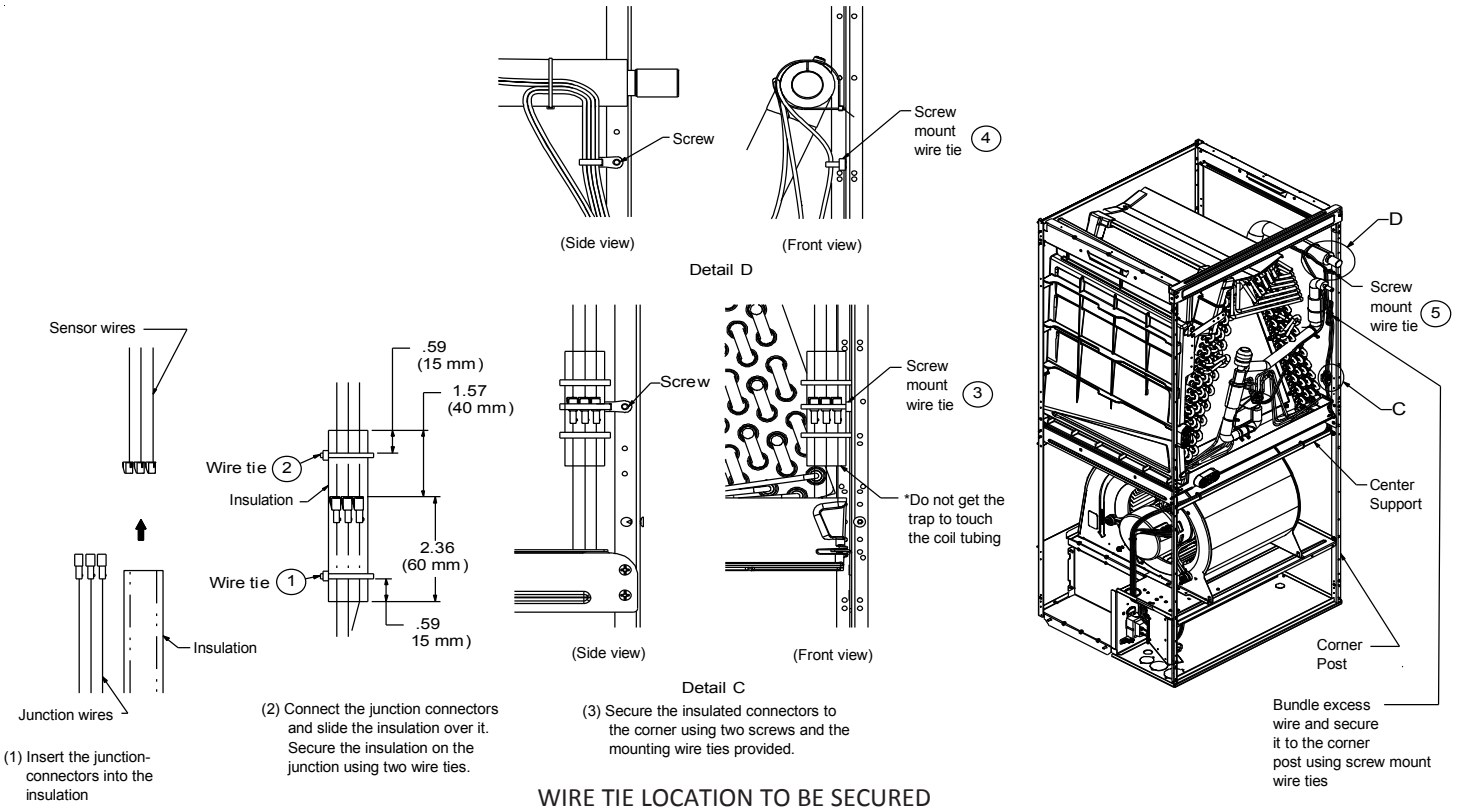

WIRE TIE LOCATION TO BE SECURED

Figure 2-2

3. Slide the coil assembly out using the bottom drain pan to pull the assembly from the cabinet.

4. For flipping the coil, drain pan extension must be removed for all models except AVPEC61D14. Center support should not be removed while removing the drain pan extension. Side drain pan and horizontal drip shield can be removed for downflow application. The side drain pan and horizontal drip shield cannot be removed for horizontal right.

5. Using the bottom drain pan to hold the coil assembly, slide the coil assembly back into the cabinet on the downflow brackets as shown in Figure 9.

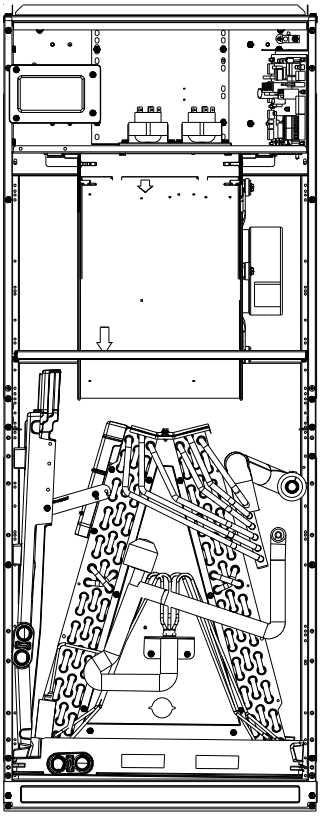

UPFLOW

Figure 3

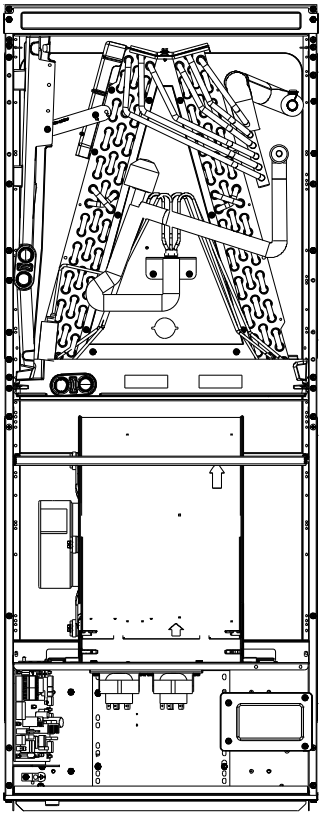

DOWNFLOW

Figure 4

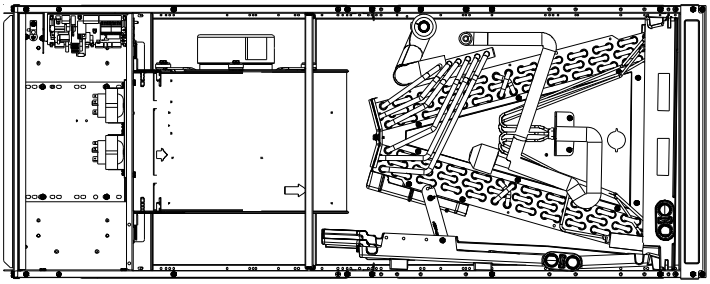

HORIZONTAL LEFT

Figure 5

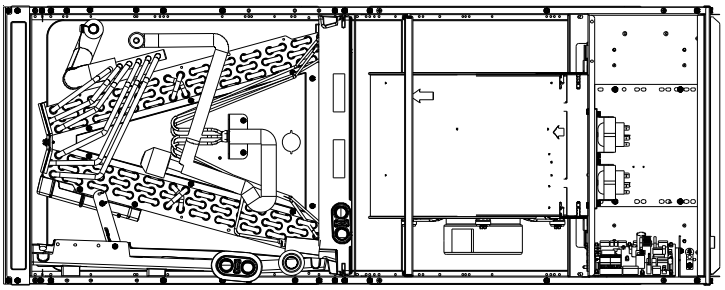

HORIZONTAL RIGHT

Figure 6

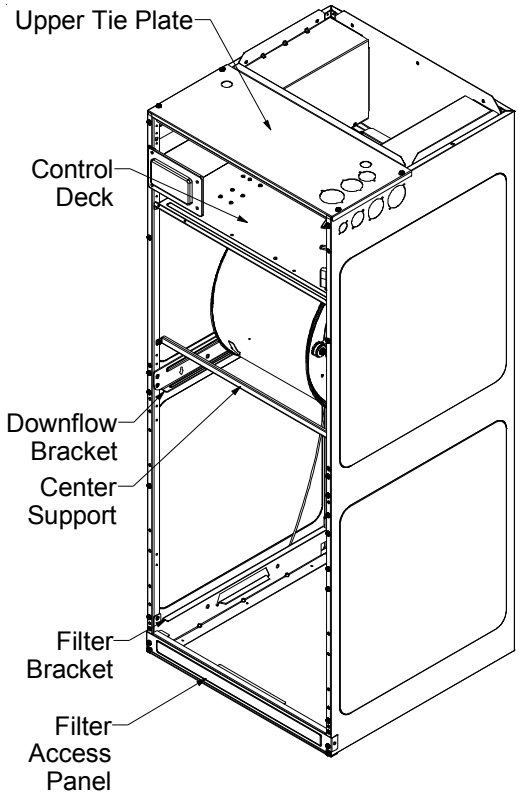

INTERNAL PART TERMINOLOGY

Figure 7

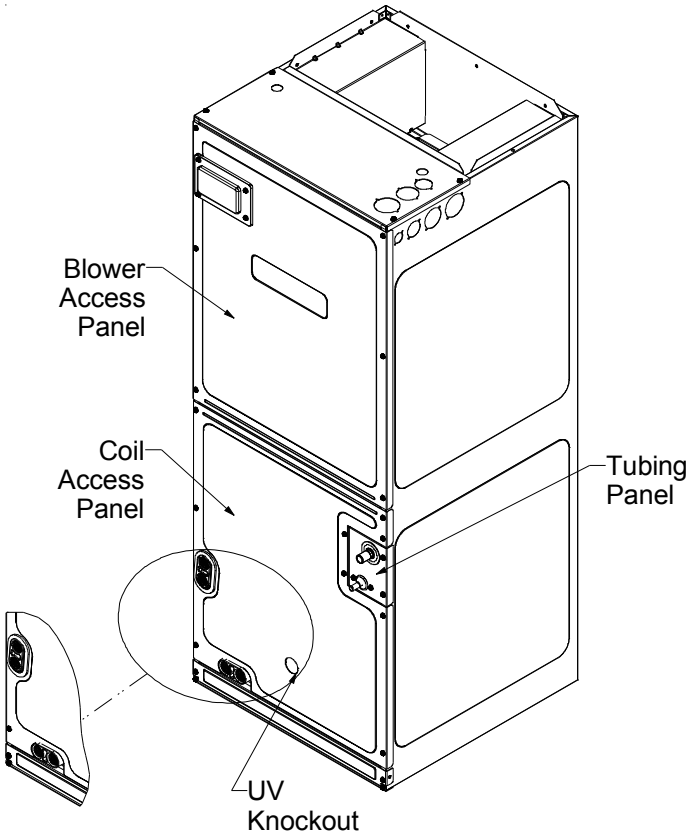

EXTERNAL PART TERMINOLOGY

Figure 8

NOTE: If removing only the coil access panel from the unit, the filter access panel must be removed first. Failure to do so may result in panel damage.

6. Reconnect the sensor wires and replace the insulation securing it with wire ties on both sides as shown in Figure 2-2. Then, secure the wire harness to the corner post using the screw mount wire ties provided.
7. Re-install the access panels removed in Step 1 as shown in Figure 10.
8. Two drain ports located at the bottom drain pan (horizontally oriented) are to be used for upflow and downflow applications and the two on the side drain pan (vertically oriented) are to be used when the unit is in horizontal right or left configuration. When the unit is in upflow or downflow configuration, the drain ports located on bottom drain pan must be plugged and vice versa. Drain ports located at lower elevation (closer to the ground) in either configuration must be connected to the main drain line and the higher is for the secondary drain line.

7 REFRIGERANT LINES

NOTE: Care should be taken to route refrigerant tubing in a way which allows adequate access for servicing and maintenance of the air handling unit.

WARNING

This product is factory-shipped with R410A and dry nitrogen mixture gas under pressure. Use appropriate service tools and follow these instructions to prevent injury.

Do not install the air handler in a location that violates the instructions provided with the condenser. If the unit is located in an unconditioned area with high ambient temperature and/or high humidity, the air handler may be subject to nuisance sweating of the casing. On these installations, a wrap of 2" fiberglass insulation with a vapor barrier is recommended.

7.1 Tubing Size

For the correct tubing size, refer to the outdoor AIR CONDITIONING OR HEAT PUMP INSTALLATION & SERVICE REFERENCE.

7.2 Tubing Preparation

WARNING

A quenching cloth is strongly recommended to prevent scorching or marring of the equipment finish when brazing close to the painted surfaces. Use brazing alloy of 5% minimum silver content.

CAUTION

Applying too much heat to any tube can melt the tube. Torch heat required to braze tubes of various sizes must be proportional to the size of the tube. Service personnel must use the appropriate heat level for the size of the tube being brazed.

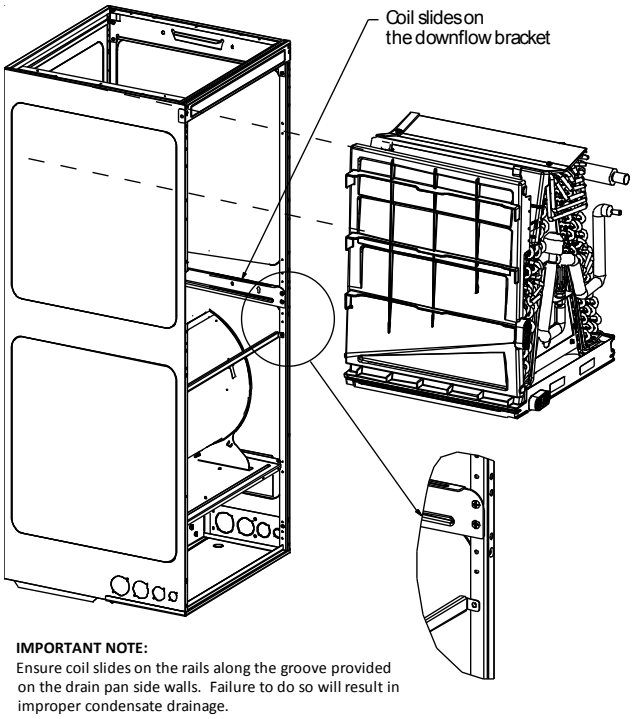

COIL INSTALLATION FOR DOWNFLOW

Figure 9

All cut ends are to be round, burr free, and clean. Failure to follow this practice increases the chances for refrigerant leaks. The suction line is spun closed and requires tubing cutters to remove the closed end.

NOTE: To prevent possible damage to the tubing joints, do not handle coil assembly with manifold or flowrator tubes. Always use clean gloves when handling coil assemblies.

NOTE: The use of a heat shield is strongly recommended when brazing to avoid burning the serial plate or the finish of the unit. Heat trap or wet rags must be used to protect heat sensitive components such as service valves, electronic expansion valve (EEV), thermistors and pressure sensors.

7.3 Tubing Connections

AVPEC models come with factory installed electronic expansion valve (EEV) pre-installed on the vapor tube.

1 Remove refrigerant tubing panel or coil (lower) access panel.
2. Remove access valve fitting cap and depress the valve stem in access fitting to release pressure. No pressure indicates possible leak.
3. Replace the refrigerant tubing panel.
4. Remove the spin closure on both the liquid and suction tubes using a tubing cutter.
5. Insert liquid line set into liquid tube expansion and slide grommet about 18" away from braze joint.

6. Insert suction line set into suction tube expansion and slide insulation and grommet about 18" away from braze joint.
7. Braze joints. Quench all brazed joints with water or a wet rag upon completion of brazing.
8. Replace access panels, suction line grommet, insulation and all screws.

NOTE: The use of a heat shield is strongly recommended when brazing to avoid burning the serial plate or the finish of the unit. Heat trap or wet rags must be used to protect heat sensitive components such as service valves, electronic expansion valve (EEV), thermistors and pressure sensors.

8 CONDENSATE DRAIN LINES

The coil drain pan has a primary and a secondary drain with 3/4" NPT female connections. The connectors required are 3/4" NPT male, either PVC or metal pipe, and should be hand tightened to a torque of no more than 37 in-lbs. to prevent damage to the drain pan connection. An insertion depth of approximately 3/8" to 1/2" (3-5 turns) should be expected at this torque.

1. Ensure drain pan hole is not obstructed.
2. To prevent potential sweating and dripping on to finished space, it may be necessary to insulate the condensate drain line located inside the building. Use Armaflex® or similar material.

A secondary condensate drain connection has been provided for areas where the building codes require it. Pitch all drain lines a minimum of 1/4" per foot to provide free drainage. Provide required support to the drain line to prevent bowing. If the secondary drain line is required, run the line separately from the primary drain and end it where condensate discharge can be easily seen.

NOTE: Water coming from secondary line means the coil primary drain is plugged and needs immediate attention.

Insulate drain lines located inside the building or above a finished living space to prevent sweating. Install a condensate trap to ensure proper drainage.

NOTE: When units are installed above ceilings, or in other locations where damage from condensate overflow may occur, it is **MANDATORY** to install a field fabricated auxiliary drain pan under the coil cabinet enclosure.

The installation must include a "P" style trap that is located as close as is practical to the evaporator coil. See Figure 12 for details of a typical condensate line "P" trap.

NOTE: Trapped lines are required by many local codes. In the absence of any prevailing local codes, please refer to the requirements listed in the Uniform Mechanical Building Code.

A drain trap in a **draw-through** application prevents air from being drawn back through the drain line during fan operation thus preventing condensate from draining, and if connected to a sewer line to prevent sewer gases from being drawn into the airstream during blower operation.

Condensate drain traps with an open vertical Tee between the air handler and the condensate drain trap can improve condensate drainage in some applications, but may cause excessive air discharge out of the open Tee. Daikin does not prohibit this type of drain but we also do not recommend it due to the resulting air leakage. Regardless of the condensate drain design used, it is the installer's responsibility to ensure the condensate drain system is of sufficient design to ensure proper condensate removal from the coil drain pan.

Use of a condensate removal pump is permitted when necessary. This condensate pump should have provisions for shutting off the control voltage should a blocked drain occur. See Auxiliary Alarm Switch section for more details. A trap must be installed between the unit and the condensate pump.

IMPORTANT NOTE: The evaporator coil is fabricated with oils that may dissolve styrofoam and certain types of plastics. Therefore, a removal pump or float switch must not contain any of these materials.

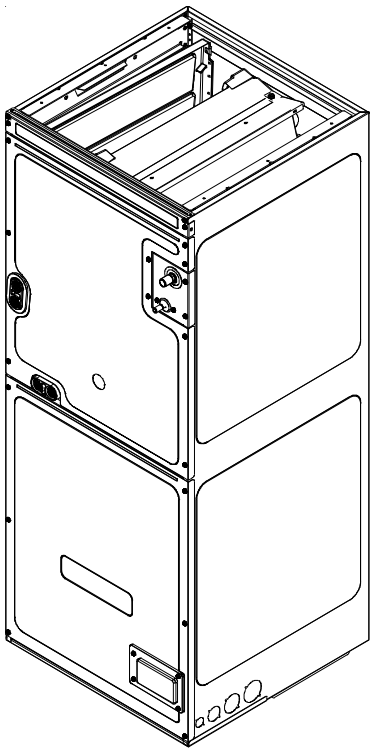

ACCESS PANEL
CONFIGURATION FOR
DOWNFLOW
OR HORIZONTAL RIGHT
Figure 10

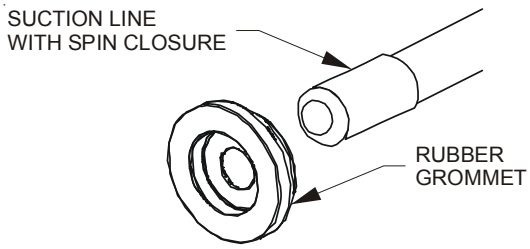

SUCTION LINE GROMMET
Figure 11

9 DUCTWORK

CAUTION

If secondary drain is not installed, the secondary access must be plugged.

This air handler is designed for a complete supply and return ductwork system.

To ensure correct system performance, the ductwork is to be sized to accommodate 350-450 CFM per ton of cooling with the static pressure not to exceed 0.5" in w.c. Refer to ACCA Manual D, Manual S and Manual RS for information on duct sizing and application. Flame retardant ductwork is to be used and sealed to the unit in a manner that will prevent leakage.

NOTE: A downflow application with electric heat must have an L-shaped sheet metal supply duct without any outlets or registers located directly below the heater.

9.1 Return Ductwork

DO NOT LOCATE THE RETURN DUCTWORK IN AN AREA THAT CAN INTRODUCE TOXIC, OR OBJECTIONABLE FUMES/ODORS INTO THE DUCTWORK. The return ductwork is to be connected to the air handler bottom (upflow configuration).

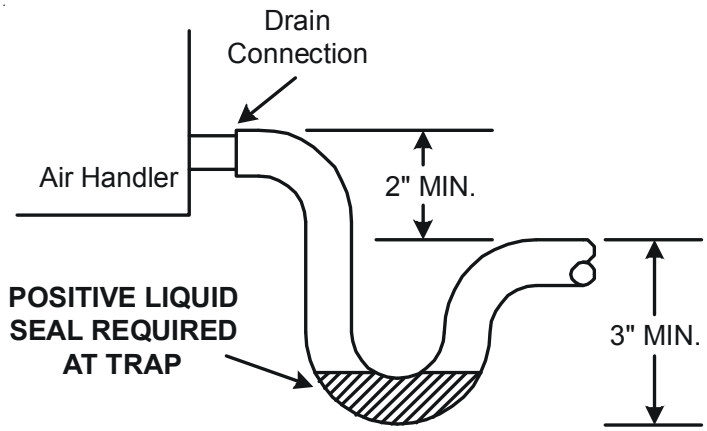

Figure 12

10 RETURN AIR FILTERS

CAUTION

Do not operate this product without all the ductwork attached.

Each installation must include a return air filter. This filtering may be performed at the air handler using the factory filter rails or externally such as a return air filter grille. When using the factory filter rails, a nominal 16x20x1”, 20x20x1” or 24x20x1” (actual dimension must be less than 23-½”x20”) filter can be installed on a B, C and D cabinet respectively (the cabinet size is the seventh letter of the model number). Washable versions are available through your local Daikin distributor.

11 ELECTRIC HEAT

Refer to the installation manual provided with the electric heat kit for the correct installation procedure. All electric heat must be field installed. If installing this option, the ONLY heat kits that are permitted to be used are the Daikin produced HKS series. Refer to the air handler unit’s Serial and Rating plate or the HKS specification sheets to determine the heat kits compatible with a given air handler. No other accessory heat kit besides the HKS series may be installed in these air handlers.

NOTE: TRANSFORMER SUB-ASSEMBLY

Before installing the Heat Kit, uninstall the transformer sub-assembly (Figure 21). Make sure to unplug 12-Pin connector before uninstalling the uninstalling the transformer sub-assembly. Follow the Heat Kit Installation Manual to install the Heat Kit. Install transformer sub-assembly back to the unit (Figure 21). Plug in 12-Pin connectors and secure screws while installing transformer sub-assembly back to the unit after heater kit installation.

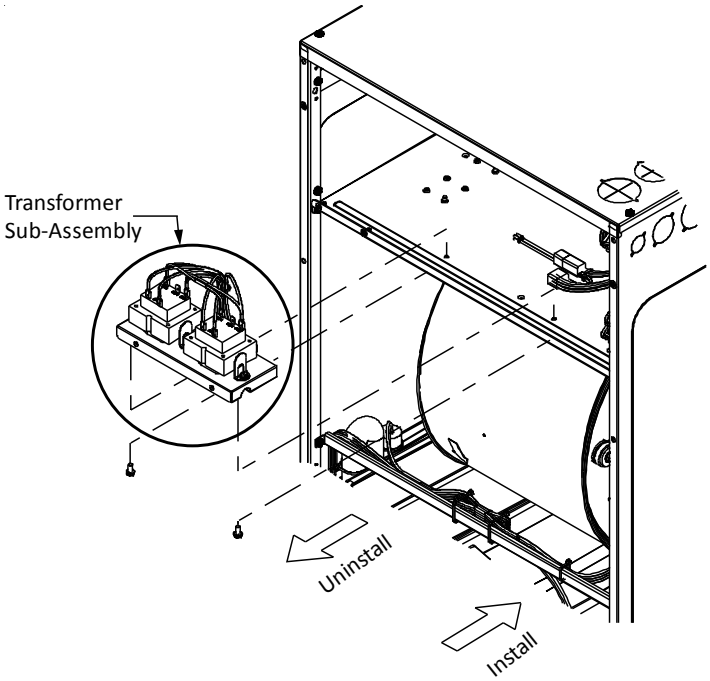

Figure 21

The heating mode temperature rise is dependent upon the system airflow, the supply voltage, and the heat kit size (kW) selected. Use data provided in Tables 3,4 and 5 to determine the temperature rise (°F).

NOTE: For emergency heat, set the dipswitch on PCB. For heating mode, use the thermostast user menu.

For installations not indicated above the following formula is to be used:

TR = (kW x 3412) x (Voltage Correction) / (1.08 x CFM)

Where:
- TR = Temperature Rise
- kW = Heater Kit Actual kW
- 3412 = Btu per kW
- VC* = .96 (230 Supply Volts)
- = .92 (220 Supply Volts)
- = .87 (208 Supply Volts)
- 1.08 = Constant
- CFM = Measured Airflow
- **VC (Voltage Correction)*

NOTE: The Temperature Rise Tables can also be used to estimate the air handler airflow delivery. When using these tables for this purpose set the room thermostat to maximum heat and allow the system to reach steady state conditions. Insert two thermometers, one in the return air and one in the supply air. The temperature rise is the supply air temperature minus the return air temperature. Using the temperature rise calculated, CFM can be estimated from the TR formula above. See Specification Sheet and/or Service Manual for more information.

CFM	HEAT KIT NOMINAL Kw							
	3	5	6	8	10	15	19/20	25
800	12	19	23	31	37			
1000	9	15	19	25	30	44		
1200	8	12	15	21	25	37	49	62
1400	7	11	13	18	21	32	42	53
1600	6	9	12	15	19	28	37	46
1800	5	8	10	14	16	25	33	41
2000	5	7	9	12	15	22	30	31

230/1/60 SUPPLY VOLTAGE - TEMP. RISE °F

Table 3

CFM	HEAT KIT NOMINAL Kw							
	3	5	6	8	10	15	19/20	25
800	11	18	22	30	35			
1000	9	14	18	24	28	42		
1200	7	12	15	20	24	35	47	59
1400	6	10	13	17	20	30	40	51
1600	6	9	11	15	18	27	35	44
1800	5	8	10	13	16	24	31	39
2000	4	7	9	12	14	21	28	35

230/1/60 SUPPLY VOLTAGE - TEMP. RISE °F

Table 4

CFM	HEAT KIT NOMINAL Kw							
	3	5	6	8	10	15	19/20	25
800	10	17	21	28	33			
1000	8	13	17	22	27	40		
1200	7	11	14	19	22	33	45	56
1400	6	10	12	16	19	29	38	48
1600	5	8	10	14	17	25	33	42
1800	5	7	9	12	15	22	30	37
2000	4	7	8	11	13	20	27	33

230/1/60 SUPPLY VOLTAGE - TEMP. RISE °F

Table 5

Model	HEATER (kW)								
	3	5	6	8	10	15	19	20	25
AVPEC25B14	550	650	700	715	875				
AVPEC37C14		850	900	1000	1170	1345	1345		
AVPEC59D14		1240	1240	1240	1240	1520		1520	
AVPEC61D14		1250	1300	1500	1550	1715		1715	1715

MINIMUM CFM REQUIRED FOR HEATER KITS

Table 6

Heat Kit Selection

For heat kit selection, see the Specification Sheet for each specific Air Handler.

12 ELECTRICAL AND CONTROL WIRING

IMPORTANT: All routing of electrical wiring must be made through provided electrical knockouts. When removing the electircal knockouts, take care not to damage the PCB. Do not cut, puncture or alter the cabinet for electrical wiring.

CAUTION

FIRE HAZARD!
To avoid the risk of property damage, personal injury or fire, use only copper conductors.

WARNING

HIGH VOLTAGE!
Disconnect ALL power before servicing.
Multiple power sources may be present.
Failure to do so may cause property damage, personal injury or death.

WARNING

HIGH VOLTAGE!
To avoid property damage, personal injury or death due to electrical shock, this unit MUST have an uninterrupted, unbroken electrical ground. The electrical ground circuit may consist of an appropriately sized electrical wire connecting the ground lug in the unit control box to the building electrical service panel.
Other methods of grounding are permitted if performed in accordance with the National Electric Code (NEC)/American National Standards Institute (ANSI)/National Fire Protection Association (NFPA) 70 and local/state codes. In Canada, electrical grounding is to be in accordance with the Canadian Electric Code (CSA) C22.1.

12.1 Building Electrical Service Inspection

This unit is designed for single-phase electrical supply only. DO NOT OPERATE AIR HANDLER ON A THREE-PHASE POWER SUPPLY. Measure the power supply to the unit. The supply voltage **must** be measured and be in agreement with the unit nameplate power requirements and within the range shown.

Nominal Input	Minimum Voltage	Maximum Voltage
208-240	197	253

ELECTRICAL VOLTAGE

Table 7

12.2 Wire Sizing

Wire size is important to the operation of your equipment. Use the following check list when selecting the appropriate wire size for your unit.

- **Wire used must be sized to carry the Minimum Circuit Ampacity (MCA) listed on the equipment's Rating Plate.**
- Refer to the NEC (USA) or CSA (Canada) for wire sizing. The unit MCA for the air handler and the optional electric heat kit can be found on the unit Series and Rating Plate.
- **Wire must be sized to allow no more than a 2% voltage drop from the building breaker/fuse panel to the unit.**
- Wires with different insulation temperature rating have varying ampacities - be sure to check the temperature rating used.

Refer to the latest edition of the National Electric Code or in Canada the Canadian Electric Code when determining the correct wire size.

12.3 Maximum Overcurrent Protection (MOP)

Every installation must include an NEC (USA) or CEC (Canada) approved overcurrent protection device. Also, check with local or state codes for any special regional requirements. Protection can be in the form of fusing or HACR style circuit breakers. The Series and Rating Plate provides the maximum overcurrent device permissible.

NOTE: Fuses or circuit breakers are to be sized larger than the equipment MCA but not to exceed the MOP.

12.4 Electrical Connections – Supply Voltage

IMPORTANT NOTE: USE COPPER CONDUCTORS ONLY.

Knockouts are provided on the air handler top panel and sides of the cabinet to allow for the entry of the supply voltage conductors, as shown in Figure 13. If the knockouts on the cabinet sides are used for electrical conduit, an adapter ring must be used in order to meet UL1995 safety requirements. An NEC or CEC approved strain relief is to be used at this entry point. Some codes/municipalities require the supply wire to be enclosed in conduit. Consult your local codes.

12.4.1 Air Handler Only (Non-Heat Kit Models)

The power supply connects to the stripped black and red wires contained in the air handler electrical compartment. Attach the supply wires to the air handler conductors as shown in the unit wiring diagram using appropriately sized solderless connectors or other NEC or CEC approved means. A ground lug is also provided in the electrical compartment. The ground wire from the power supply must be connected to this ground lug.

12.4.2 Air Handler - Non-Circuit Breaker Heat Kits

A terminal block is provided with the HKS kit to attach the power supply and air handler connections. Follow the HKS Installation Manual and wiring diagram for complete wiring details.

12.4.3 Air Handler With Circuit Breaker Heat Kit

The air handler comes with a plastic cover on the blower access panel for easy access on the circuit breakers. Do not discard or puncture the plastic cover, it needs to be re-installed and sealed tight on the access panel once circuit breaker is installed for heater kit. The circuit breakers have lugs for power supply connection. See the HKS Installation Instructions for further details.

13 ACHIEVING 1.4% AND 2.0% AIRFLOW LOW LEAKAGE RATE

Ensure all the gaskets remain intact on all surfaces as shipped with the unit. These surfaces are areas between the upper tie plate and coil access panel, blower access and coil access panels, and between the coil access and filter access panels. Ensure upon installation, that the plastic breaker cover is sitting flush on the blower access panel and all access panels are flush with each other and the cabinet. With these requirements satisfied, the unit achieves less than 1.4% airflow leakage @ 0.5 inch wc static pressure and less than 2% airflow leakage @1inch wc static pressure when tested in accordance with ASHRAE Standard 193.

IMPORTANT: After installing the heater kits, it is very important to seal the gap between the circuit breaker and the cover. Putty paste or gasket can be used to seal the gap so that air leakage can be minimized.

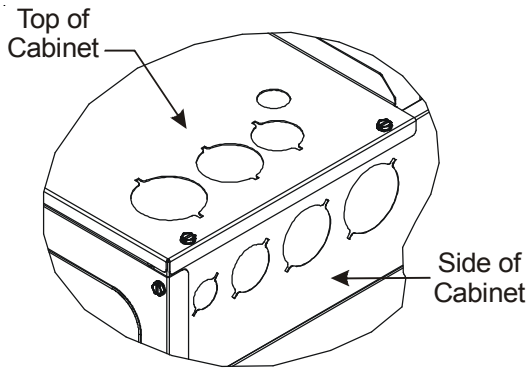

KNOCK-OUT FOR ELECTRICAL CONNECTIONS

Figure 13

14 MISCELLANEOUS START-UP CHECKLIST

- Prior to start-up, ensure that all electrical wires are properly sized and all connections are properly tightened.
- All panels must be in place and secured. For Air Tight application, gasket must be positioned at prescribed locations to achieve 2% leakage.
- Tubing must be leak free.
- Condensate line must be trapped and pitched to allow for drainage.
- Auxiliary drain is installed when necessary and pitched to allow for drainage.
- Low voltage wiring is properly connected.
- Unit is protected from vehicular or other physical damage.
- Return air is not obtained from, nor are there any return air duct joints that are unsealed in, areas where there may be objectionable odors, flammable vapors or products of combustion such as carbon monoxide (CO), which may cause serious personal injury or death.

IMPORTANT NOTE: If thumb screws are used to access the filter, ensure the washer installed on the screw behind the access panel remains in place after re-installation.

NOTE: A removable plug connector is provided with the control to make thermostat wire connections. This plug may be removed, wire connections made to the plug, and replaced. It is **STRONGLY** recommended that you do not connect multiple wires into a single terminal. Wire nuts are recommended to ensure one wire is used for each terminal. Failure to do so may result in intermittent operation.

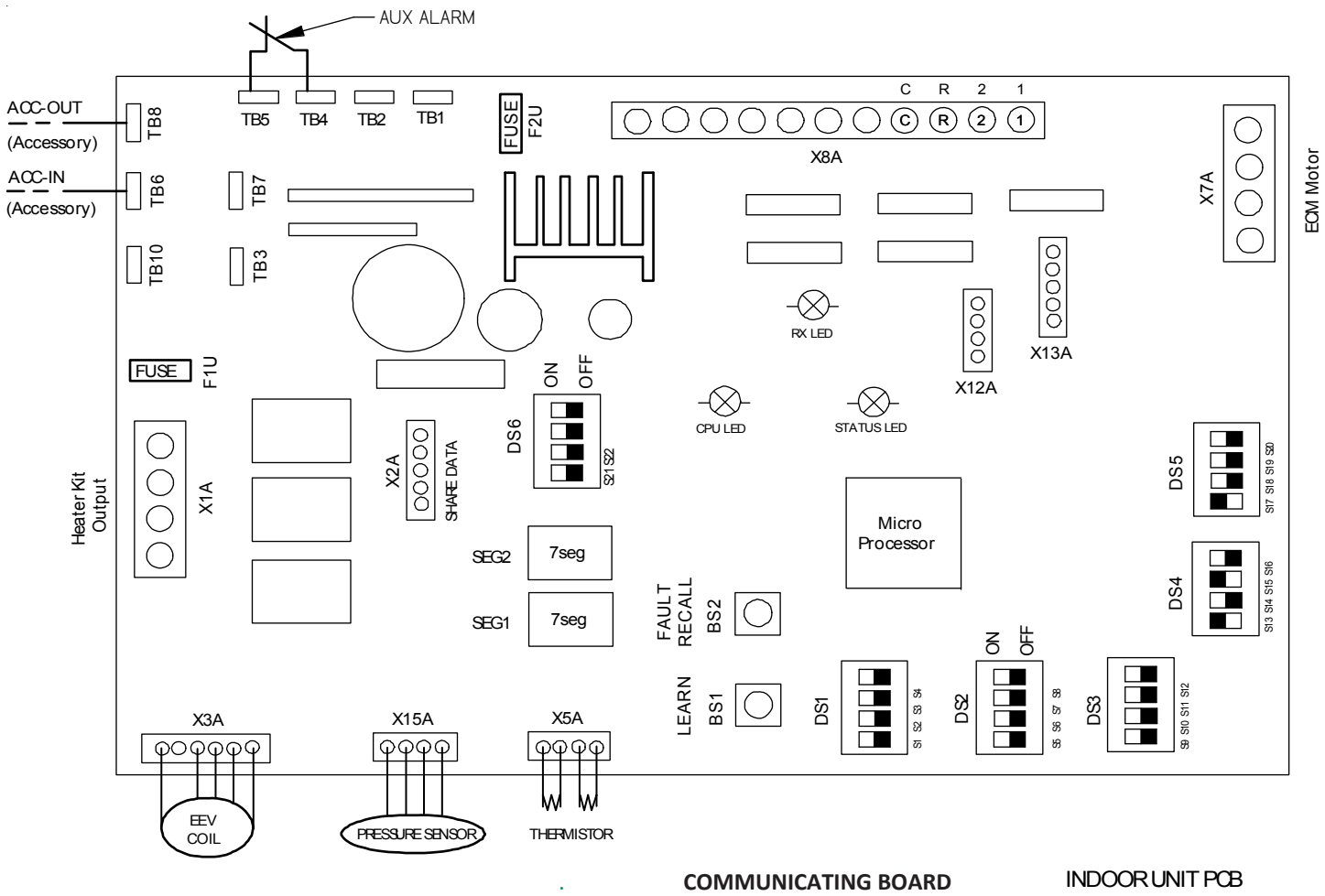

Figure 14

14.1 Auxiliary Alarm Switch

The control is equipped with two Auxiliary Alarm terminals, labeled TB4 and TB5 which are typically utilized in series with a condensate switch but could also be used with compatible CO_2 sensors or fire alarms.

The auxiliary alarm switch must be normally closed and open when the alarm occurs. For example, a normally closed condensate switch will open when the base pan's water level reaches a particular level. The control will respond by turning off the blower motor and outdoor unit and displaying the proper fault codes. If the switch is later detected closed for 30 seconds, normal operation resumes and the error message is removed. (The switch is closed as part of the default factory setting.) The error will be maintained in the equipment's fault history. See Figures 14 and 15 for the connection location.

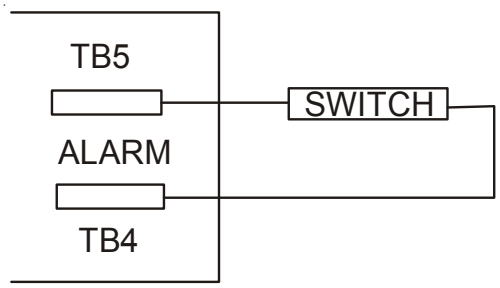

Figure 15

14.2 Circulator Blower

This air handler is equipped with a variable speed circulator blower. This blower provides several automatically-adjusted blower speeds. The Specification Sheet applicable to your model provides an airflow table, showing the relationship between airflow (CFM) and external static pressure (E.S.P.). For heater kit installation, it is important to set the capacity of the electric heater at two locations

Set-up menu

("HT KIT(kW)") of thermostat

Section 17.4 lists details for heater kit capacity selection. Confirm if the selection is correctly done from CONFIGURATION menu (section 17.1) of the ComfortNet™ systems Advanced feature Menus.

Indoor blower airflow (CFM) for a particular heater kit selection can be checked using the STATUS menu (section 17.5) or from the 7-segment display on the control board. (See section SETTING THE MODE DISPLAY).

NOTE: Upon start up in communicating mode the circuit board may display an "Ed" error. This is an indication that the DIP switches on the control board need to be configured in accordance with the Electric Heating Airflow Table. Configuring the DIP switches and resetting power to the unit will clear the error code.

CAUTION

Do not change any other dip switches other than S9 to S12. Incorrect settings may cause any error. For default setting, see Figure 14.

14.3 AVPEC Motor Orientation

If the unit is in the upflow position, there is no need to rotate the motor. If the unit is in the downflow position, loosen motor mount and rotate motor as shown in the *AVPEC Motor Orientation* Figure 16. Be sure motor is oriented with the female connections on the casing down. If the motor is not oriented with the connections down, water could collect in the motor and may cause premature failure.

14.4 Accessory Contacts

The control is equipped with an Accessory Relay and a pair of ¼ inch accessory terminals which is normally open, labeled ACC-IN and ACC-OUT (see accessory contacts graphic). The Accessory Relay can be configured to close with humidification functionality or to close anytime the blower is running. A closed relay means the two terminals will have continuity between them (the control does not energize these contacts). The set-up menu is where this configuration takes place.

(HUM) Humidifier

For the setup for humidification functionality, the accessory terminals have 3 operational modes.

1. ON: Humidifier is only enabled during a call for heat. During a heat call the accessory relay will close only if there is an active call for humidification from the thermostat. Otherwise, the relay will be open.
2. OFF: Humidifier remains off (relay never closes).

DIP Switch Setting	MODEL			
	AVPEC25B14	AVPEC37C14	AVPEC59D14	AVPEC61D14
First Valid Heater Kit	3	5	5	5
Second Valid Heater Kit	5	6	6	6
Third Valid Heater Kit	6	8	8	8
Fourth Valid Heater Kit	8	10	10	10
Fifth Valid Heater Kit	10	15	15	15
Sixth Valid Heater Kit	X	19	20	20
Seventh Valid Heater Kit	X	X	X	25

HEATER KIT OPTIONS
Table 8

DIP SWITCH SETTING					
Function	Function	Switch 9 (S9)	Switch 10 (S10)	Switch 11 (S11)	Switch 12 (S12)
Heater Kit Selection	NO Heater Kit	OFF*	OFF*	OFF*	OFF*
	First Valid Heater Kit	ON	ON	ON	ON
	Second Valid Heater Kit	ON	ON	ON	OFF
	Third Valid Heater Kit	ON	ON	OFF	ON
	Fourth Valid Heater Kit	ON	ON	OFF	OFF
	Fifth Valid Heater Kit	ON	OFF	ON	ON
	Sixth Valid Heater Kit	ON	OFF	ON	OFF
	Seventh Valid Heater Kit	ON	OFF	OFF	ON

DIP SWITCH SETTING
Table 9
Note: Default factory settings are marked with *

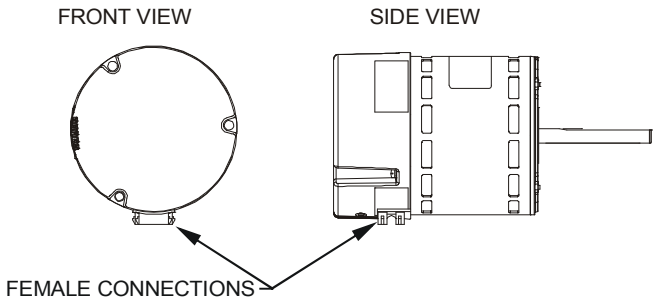

AVPEC MOTOR ORIENTATION

Figure 16

3. IND: Humidifier will cycle with any active call for humidification from the thermostat (independent of a heat call). The relay will remain open during cooling operation. This mode also allows the user to select one of 4 fan speeds (25, 50, 75, and 100%). The fan speed will be used when the system is in an idol state and a call for humidification is made by the thermostat.

NOTE: If "HUM" is selected in Accessary setting (ACC) menu, Humidity Setting (HUM) will appear on set-up menu. If "IND" is then selected under the HUM menu, Humidity Airflow (HUM FAN SPD (%)) will appear on the set-up menu. Correct values must be set to use humidifier. Default Factory setting of HUM is OFF.

(W/BLWR) With Blower

When the Accessory Relay is setup as With Blower, the relay will be closed anytime the blower is running.

15 TROUBLESHOOTING

15.1 Electrostatic Discharge (ESD) Precautions

NOTE: Discharge body's static electricity before touching unit. An electrostatic discharge can adversely affect electrical components.

Use the following precautions during air handler installation and servicing to protect the integrated control module from damage. By putting the air handler, the control, and the person at the same electrostatic potential, these steps will help avoid exposing the integrated control module to electrostatic discharge. This procedure is applicable to both installed and uninstalled (ungrounded) blowers.

1. Disconnect all power to the blower. Do not touch the integrated control module or any wire connected to the control prior to discharging your body's electrostatic charge to ground.
2. Firmly touch a clean, unpainted, metal surface of the air handler blower near the control. Any tools held in a person's hand during grounding will be discharged.
3. Service integrated control module or connecting wiring following the discharge process in step 2. Use caution not to recharge your body with static electricity; (i.e., do not move or shuffle your feet, do not touch ungrounded objects, etc.). If you come in contact with an ungrounded object, repeat step 2 before touching control or wires.
4. Discharge your body to ground before removing a new control from its container. Follow steps 1 through 3 if installing the control on a blower. Return any old or new controls to their containers before touching any ungrounded object.

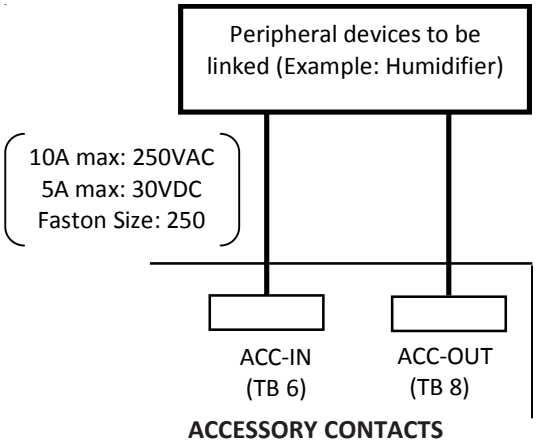

Figure 17

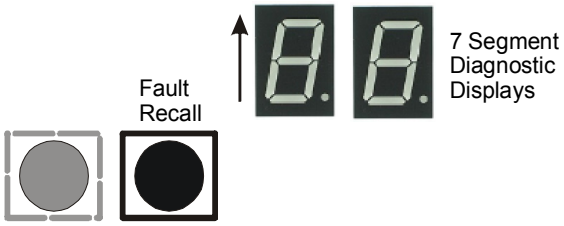

Figure 18

15.2 Diagnostic Chart

Refer to the *Troubleshooting Chart* at the end of this manual for assistance in determining the source of unit operational problems. The 7 segment LED display will provide any active fault codes. An arrow printed next to the display indicates proper orientation (arrow points to top of display). See following image.

15.3 Fault Recall

The integrated control module is equipped with a momentary push-button switch that can be used to display the last six faults on the 7 segment LED display. Follow the sequence to use the feature. The control must be in Standby Mode (no thermostat inputs).

1. Press FAULT RECALL button for 2 to 5 seconds*, so that 7 segment blinks "- -".
2. Release FAULT RECALL button in this period, 7 segment display shows the most recent fault.

3. Each time FAULT RECALL button is pressed after that**, 7 segment display outputs next occurred fault.
4. After displaying the series of recent faults, 7 segment displays blink "- -" and goes back to Standby Mode.

To clear the error code history:

1. Press FAULT RECALL button for 10 to 15 seconds***, so that 7 segment displays blink "- -".
2. Release FAULT RECALL button in this period, 7 segment displays show "88" and faults are cleared.

NOTE:

* If FAULT RECALL button is not pressed long enough (for 2 to 5 seconds), control goes back to Standby Mode.

If the FAULT RECALL button is pressed for 5 to 10 seconds, control goes back to Standby Mode.

** Consecutively repeated faults are displayed a maximum of three times.

*** If FAULT RECALL button is help pressed for longer than 15 seconds, control goes back to Standby Mode.

15.4 Dehumidification

The thermostat reads the indoor humidity level from the CTK04 and allows the user to set a dehumidification target based on these settings. The thermostat controls the humidity level of the conditioned space using the cooling system. Dehumidification is engaged whenever a cooling demand is present and structural humidity levels are above the target level. When this condition exists the circulating fan output is reduced, increasing system run time, over cooling the evaporator coil and ultimately removing more humidity from the structure than if only in cooling mode. The CTK04 also allows for an additional overcooling limit setting from 0 °F to 3 °F setup through the Installer Option menu (direction below). This allows the cooling system to further reduce humidity by lowering the temperature up to 3° F below the cooling setpoint in an attempt to better achieve desired humidity levels.

By default dehumidification needs to be turned ON at the thermostat via the Dehumidification Equipment menu. Dehumidification can be activated at the original equipment setup by selecting the A/C with Low Speed Fan button in the Dehumidification Menu. Availability can be verified by pressing MENU on the home screen. Scroll down and if a Dehumidification button is present dehumidification is activated.

If Dehumidification is not available in the menu then it must be enabled through the Installer Options menu. Use the following procedure to enable and disable dehumidification:

1. On the CTK04 HOME screen, select MENU.
2. From the MENU screen, scroll down and select Installer Options.
3. Enter installer password if known.

a. The password is the thermostat date code and can be obtained by selecting the red Cancel button and selecting the Dealer Information button.
b. Once recorded click the green OK button and return to the previous step.

4. Select YES to continue.
5. Select View / Edit Current Setup.
6. Scroll down and select Dehumidification.
7. Once open select Dehumidification Equipment: None.
8. From the Dehumidification Menu select A/C with Low Speed Fan and click the green Done button.
9. Additional Dehumidification operational options can be selected in the resulting window.
10. Once satisfied with the selection navigate to the HOME screen by selecting the Done button and selecting Yes to verify the changes.
11. Select Previous Menu, then the HOME to return to the main menu.

DEHUMIDIFICATION TIPS

For effective dehumidification operation:

- Ensure "Dehum" is ON through the Installer Options menu and/or in the ComfortNet User Menu (COOL SETUP).

  - If ON, the Dehumidification menu should be visible in the main menu.

- Verify the cooling airflow profile is set to "Profile D".

  - See the Cool Set-up section of the Installation Manual for com comlete airflow profile details.

  - By default "Dehum" is ON and the cooling airflow profile is set to "Profile D".

- For additional dehumidification control, airflow settings are field adjustable and can be fine-tuned to a value that is comfortable for the application from a range of +15% to -15%.

  - See the Heat Pump Advanced Feature Menu section of the Installation Manual for more detail.

16 COMFORTNET™ SYSTEM

16.1 Overview

The ComfortNet system is a system that includes a ComfortNet compatible air handler and air conditioner or heat pump with a CTK04 thermostat.

A ComfortNet heating/air conditioning system differs from a non-communicating/traditional system in the manner in which the indoor unit, outdoor unit and thermostat interact with one another. In a traditional system, the thermostat sends commands to the indoor and outdoor units via analog 24 VAC signals. It is a one-way communication path. The indoor and outdoor units typically do not return information to the thermostat.

On the other hand, the indoor unit, outdoor unit, and thermostat comprising a ComfortNet system "communicate" digitally with one another. It is now a two-way communications path. The thermostat still sends commands to the indoor and outdoor units and may also request and receive information from both the indoor and outdoor units. This information may be displayed on the ComfortNet thermostat. The indoor and outdoor units also interact with one another. The outdoor unit may send commands to or request information from the indoor unit. This two-way digital communications between the thermostat and subsystems (indoor/outdoor unit) is the key to unlocking the benefits and features of the ComfortNet system.

Two-way digital communications is accomplished using only two wires. The thermostat and air handler controls are powered with 24 VAC. A maximum of 4 wires between the air handler and thermostat is required to operate the system. An inverter equipped outdoor unit does not require 24 VAC. Only the 2 digital communication wires are required between the air handler and inverter unit (pins 1 and 2 on the thermostat connector.)

16.2 Airflow Consideration

Airflow demands are managed differently in a fully communicating system than in a non-communicating wired system. The system operating mode (as determined by the thermostat) determines which unit calculates the system airflow demand. If the indoor unit is responsible for determining the airflow demand, it calculates the demand and sends it to the ECM motor. If the outdoor unit or thermostat is responsible for determining the demand, it calculates the demand and transmits the demand along with a fan request to the indoor unit. The indoor unit then sends the demand to the ECM motor. The table below lists the various ComfortNet systems, the operating mode, and airflow demand source.

For example, assume the system is a heat pump matched with an air handler. With a call for low stage cooling, the heat pump will calculate the system's low stage cooling airflow demand. The heat pump will then send a fan request along with the low stage cooling airflow demand to the air handler. Once received, the air handler will send the low stage cooling airflow demand to the ECM motor. The ECM motor then delivers the low stage cooling airflow. See the applicable ComfortNet air conditioner or heat pump installation manual for the airflow delivered during cooling or heat pump heating.

In continuous fan mode, the CTK04 thermostat provides the airflow demand. The CTKO4 provides 4 continuous fan speeds (25%, 50%, 75% and 100% of maximum airflow). During continuous fan operation, the thermostat sends a fan request along with the continuous fan demand to the air handler. The air handler, in turn, sends the demand to the ECM motor. The ECM motor delivers the requested continuous fan airflow.

LED	LED Status	Indication	Possible Causes	Corrective Action(s)	Notes & Cautions
Red Communications LED	Off	• None	• None	• None	• None
	1 Flash	• Communications Failure	• Communications Failure	• Depress Learn Button • Verify wiring connection	• Depress once quickly for a power-up reset • Depress and hold for 5 seconds for an out-of-box reset
	2 Flashes	• Out-of-box reset	• Control power up • Learn button depressed	• None	• None
Green Receive LED	Off	• No power • Communications error	• No power to air handler • Open fuse • Communications error	• Check fuses and circuit breakers; replace/reset • Replace blown fuse • Check for shorts in low voltage wiring in air handler/system • Reset network by depressing learn button • Check data 1/data2 voltages	• Turn power OFF prior to repair
	1 Steady Flash	• No network found	• Broken/ disconnected data wire(s) • Air handler is installed as a non-communicating/ traditional system	• Check communications wiring (data 1/data 2 wires) • Check wire connections at terminal block • Verify air handler installation type (non-communicating/ traditional or communicating) • Check data 1/data 2 voltages	• Turn power OFF prior to repair • Verify wires at terminal blocks are securely twisted together prior to inserting into terminal block • Verify data 1 and data voltages as described above
	Rapid Flashing	• Normal network traffic	• Control is "talking" on network as expected	• None	• None
	On Solid	• Data 1/Data 2 miss-wire	• Data 1/data 2 wires reversed at air handler, thermostat, or ComfortNet™ compatible outdoor AC/HP • Short between data 1/data 2 wires • Short between data 1 or data 2 wires and R (24VAC) or C (24VAC common)	• Check communications wiring (data 1/data 2 wires) • Check wire connections at terminal block • Check data 1/data 2 voltages	• Turn power OFF prior to repair • Verify wires at terminal blocks are securely twisted together prior to inserting into terminal block • Verify data 1 and data voltages as described above

COMMUNICATIONS TROUBLESHOOTING CHART

16.3 CTKO4 Thermostat Wiring

NOTE: Refer to section Electrical Connections for 208/230 volt line connections to the air handler**.**

NOTE: Use thermostat model that is later than **CTK04AB.**

NOTE: A removable plug connector is provided with the control to make thermostat wire connections. This plug may be removed, wire connections made to the plug, and replaced. It is **STRONGLY** recommended that you do not connect multiple wires into a single terminal. Wire nuts are recommended to ensure one wire is used for each terminal. Failure to do so may result in intermittent operation.

Typical 18 AWG thermostat wire may be used to wire the system components. Two hundred fifty (250) feet is the maximum of wire between indoor unit and outdoor unit, or between indoor unit and thermostat.

16.3.1 Two-Wire Outdoor and Four-Wire Indoor Wiring

Typical wiring will consist of two wires between the indoor unit and outdoor unit and four wires between the indoor unit and thermostat. Figure 20 shows the required wires are: data lines, 1 and 2; "R" (24 VAC hot) and "C" (24 VAC common).

16.4 ComfortNet™ System Advanced Features

The ComfortNet system permits access to additional system information, advanced set-up features, and advanced diagnostic/troubleshooting features. These advanced features are organized into a menu structure. See the AIR HANDLER ADVANCED FEATURES MENU section for layout of menu shortcuts. The tables on page 21, section 17 show the air handler advanced feature menus.

16.5 Network Troubleshooting

The ComfortNet system is a fully communicating system, constituting a network. Occasionally the need to troubleshoot the network may arise. The integrated air handler control has some on-board tools that can be used to troubleshoot the network. These tools are: red communications LED, green receive (Rx) LED, and the learn button. Refer to the *Communications Troubleshooting Chart* at the end of this manual for error codes, possible causes and corrective actions

- Red communications LED – Indicates the status of the network. The Communications Troubleshooting Chart on the following page indicates the LED status and the corresponding potential problem.
- Green receive LED – Indicates network traffic. The following table indicates the LED status and the corresponding potential problem.
- Learn button – Used to reset the network. Depress the button for approximately 2 seconds to reset the network.

System	System Operating Mode	Airflow Demand Source
Air Conditioner + Air Handler	Cooling	Air Conditioner
	Heating	Air Handler
	Continuous Fan	Thermostat
Heat Pump + Air Handler	Cooling	Heat Pump
	Heat Pump Heating Only	Heat Pump
	HP+ Electric Heat Strips	Greater than of Heat Pump of Air Handler Demand
	Electric Heat Strips Only	Air Handler
	Continuous Fan	Thermostat

Table 10

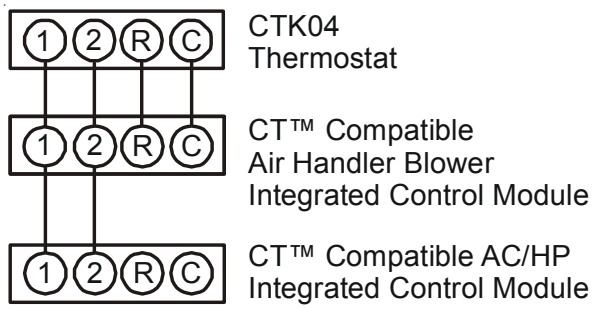

SYSTEM WIRING

Figure 19

16.6 System Troubleshooting

NOTE: Refer to the instructions accompanying the ComfortNet compatible outdoor AC/HP unit for unit specific troubleshooting information. Refer to the *Troubleshooting Chart* at the end of this manual for a listing of possible air handler error codes, possible causes and corrective actions.

17 DIRECTIONS TO COMFORTNET SYSTEM ADVANCED FEATURE MENUS

Press ***MENU***, scroll down and press ***COMFORTNET USER MENU***. Enter the date code (password) when prompted. The date code is printed on the back of the thermostat; or press ***MENU>EQUIPMENT STATUS*** and scroll down to find the date code. After you enter the date code, select air handler to view the system menus.

17.2 Diagnostics

Accessing the air handler's diagnostics menu provides ready access to the most recent six faults detected by the air handler. Faults are stored most recent to least recent. Any consecutively repeated fault is stored a maximum of three times. Example: A clogged return air filter causes the air handler's motor to repeatedly enter a limiting condition. The control will only store this fault the first three *consecutive* times the fault occurs.

NOTE: It is highly recommended that the fault history be cleared after performing maintenance or servicing the air handler**.**

DIAGNOSTICS		
Submenu Item	**Indication/User Modifiable Options**	**Comments**
Fault 1 (FAULT #1)	Most recent fault	For display only
Fault 2 (FAULT #2)	Next most recent fault	For display only
Fault 3 (FAULT #3)	Next most recent fault	For display only
Fault 4 (FAULT #4)	Next most recent fault	For display only
Fault 5 (FAULT #5)	Next most recent fault	For display only
Fault 6 (FAULT #6)	Least recent fault	For display only
Clear Faults (CLEAR)	NO or YES	Selecting "YES" clears the fault history

NOTE: Consecutively repeated faults are shown a maximum of 3 times

ADVANCED FEATURES DIAGNOSTICS MENU CHART

17.3 Identification

The identification menu displays the model number, serial number and control software revision for the equipment. A model number check will help determine if the equipment shared data is correct for the unit (if the model number is not correct for the air handler, a memory card will be required to load the proper data).

IDENTIFICATION	
Submenu Item	**Indication (for Display Only; not User Modifiable)**
Model Number (MOD NUM)	Displays the air handler model number
Serial Number (SER NUM)	Displays the air handler serial number (Optional)
Software Version (SOFTWARE)	Displays the application software revision

ADVANCED FEATURES IDENTIFICATION MENU CHART

17.4 Set-Up

SET-UP		
Submenu Item	**User Modifiable Options**	**Comments**
HUM	OFF*, ON, IND	Choose the operation mode of Humidifier (This selection is only displayed if HUM is selected in ACC)
HUM FAN SPD (%)	25%, 50%*, 75% , 100%	Choose the indoor fan speed at the time of humidification (This selection is only displayed if IND is selected in HUM and HUM is selected in ACC)
ACC	HUM, W/BLWR, NONE*	Choose Accessory (Humidifier, any other accessory requiring blower or none)
HT KIT (kW)	All valid HT options	Chose valid heater kit installed (Default setting is set to 'no heater kit')
Heat Airflow Trim (%) (HT TRM)	0*, 2, 4, 6, 8, 10	Trims the heating airflow by the selected amount

The set-up menu allows for selecting accessories that may have been connected to the indoor unit. User can choose between Humidifier, W/BLWR for an accessory which is run in conjunction with the blower or none if no accessory is connected. HUM (Humidity Setting) selection is only displayed if HUM is selected in ACC. User can choose the operation mode of Humidifier. HUM FAN SPD (Humidity Airflow) selection is only displayed if IND is selected in HUM and HUM is selected in ACC. User can choose the indoor fan speed trim at the time of humidification. Heater kit selection can also be done from this menu. It is very important to select the correct heater kit value for normal operation of the system. The set-up menu allows for selecting the trim adjustment of nominal electric heat airflow from 0% to 10% (in 2% incremental steps).

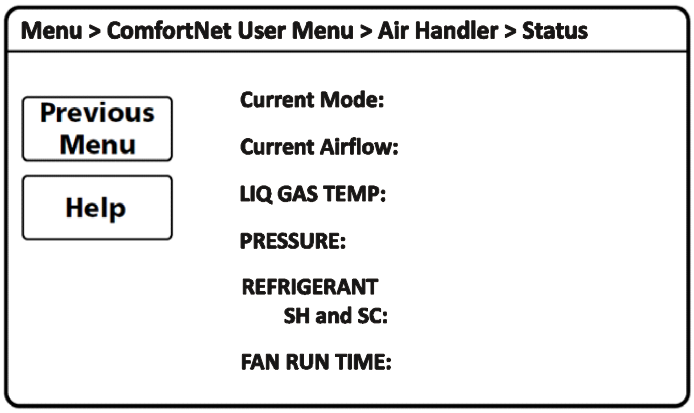

Figure 20

17.5 Status

This menu displays information about the systems current status. This menu can be utilized to confirm correct functionality of the equipment and for troubleshooting purposes. It can also be used to compare measured airflow values to the value reported by the air handler.

The following items will be displayed:

Current Mode:	Current system operational mode (COOL, HEAT, FAN, AUX HEAT, DEFROST, ON).
Current Airflow:	Indoor unit airflow (CFM)
LIQ GAS TEMP:	ID coil inlet temp, ID coil outlet temp (cooling mode) ID coil outlet temp, ID coil inlet temp (heating mode)
PRESSURE:	Indoor coil pressure sensor reading
REFRIGERANT:	R-410A
SH and SC:	ID super heat (cooling mode), ID subcooling (heating mode)
FAN RUN TIME:	Provides ID fan run time in hours

Error Code	PCB LED Display	ClimateTalk Message	Description	Possible Causes	Corrective Actions
EE	No display (EE display is EMG mode)	INTERNAL FAULT	• No power supply to ID blower / no 24 volt power to PCB • Blown fuse or circuit breaker • PCB has an internal fault	• Manual disconnect switch OFF • No power supply to ID blower / no 24 volt power to PCB • Blown fuse or faulty circuit breaker • Control board has internal fault	• Assure 208/230 volt and 24 volt power to blower and control board. • Check fuse F2U on control board • Check for possible short in 208/230 volt and 24 volt circuits. Repair as necessary. • Replace the control board.
Eb	E_Eb	No Display	Selecting "no heater kit" and receiving electric heat demand	• No heater kit selected	• Select the valid heater kit on thermostat • Valid dip switch selection (heater kit selection out of range of the unit configuration)
Ed	E_Ed	Check Heater Kit Dip Switches (CHECK HTR DIPSW)	Heater Kit dip switches not set properly	• Invalid heater kit selected	• Set correct dip switches
E5	E_E5	BLOWN FUSE	Fuse Open	• Fuse (F1U) is blown • Connector TB10 is open	• Replace fuse • Check wiring to AUX alarm, heater kit, communication connection. • Replace the control board *After recovering the system, E5 will still be displayed on the indoor PCB (about 30 seconds). BLOWN FUSE will still be displayed on the thermostat within 45 seconds. They will be cleared automatically.*
EF	E_EF	Auxiliary Contacts Open (AUX ALARM FAULT)	Auxiliary Switch Open	• High water level in the evaporation coil • The connected alarm device is activated • Auxiliary Alarm terminals (TB4, TB5) are open	• Check water level in drain pan • Check alarm device. • Close Auxiliary terminals TB4 and TB5 if not used *After recovering the system, EF will still be displayed on the indoor PCB (about 30 seconds). AUXILIARY CONTACTS OPEN will still be displayed on the thermostat within 45 seconds. They will be cleared automatically.*
d0	E_d0	Data Not Yet On Network (NO NET DATA)	Data not on Network	• No shared data on the network	• Populate shared data set using memory card.
d1	E_d1	Invalid Data On Network (INVALID DATA)	Invalid Data on Network	• Wrong shared data on the network	• Populate shared data set using memory card.
d4	E_d4	Invalid Memory Card data (INVALID MC DATA)	Invalid Memory Card Data	• Wrong memory card data	• Replace circuit board • Rewrite data using the correct memory card
b0	E_b0	Blower Motor Not Running (MOTOR NOT RUN)	Blower Motor not running	• Fan/motor obstruction • Power interruption (low voltage) • Incorrect / loose wiring	• Check for obstruction on the fan/motor • Verify the input voltage at the motor • Check wiring or tighten wiring connections if needed • Replace circuit board or motor
b1	E_b1	Blower Communication Error (MOTOR COMM)	Blower Motor Communication error	• Incorrect / loose wiring • Power interruption (low voltage)	• Check wiring or tighten wiring connections if needed • Verify the input voltage at the motor • Replace circuit board or motor
b2	E_b2	Blower Motor HP Mismatch (MOTOR MISMATCH)	Blower Motor HP Mismatch	• Incorrect size motor • Invalid shared data	• Correct motor installation • Populate shared data set using memory card.
b3	E_b3	No Display	Blower Motor operating in Power, Temp or Speed Limiting conditions	• Fan/motor obstruction or blocked filters • Power interruption (low voltage) • Incorrect wiring • Blockage in the airflow (ductwork) or ductwork undersized	• Check for obstruction on the fan/motor/ductwork, clean filters • Verify the input voltage at the motor • Check wiring • Replace motor

Error Code	PCB LED Display	ClimateTalk Message	Description	Possible Causes	Corrective Actions
b4	E_b4	BLower Motor Trip or Lost Rotor (MOTOR TRIPS)	Blower Motor - Current Trip (or) Lost Rotor	• Fan/motor obstruction or abnormal motor loading • Power interruption (low voltage) • High loading conditions, blocked filters • Blockage in the airflow (ductwork) or ductwork undersized	• Check for obstruction on the fan/motor/ductwork • Verify the input voltage at the motor • Check filters, grills, duct system, coil air inlet/outlet for blockages. • Replace motor
b6	E_b6	Voltage or Temperature Trip (MOTOR VOLTS)	• Blower motor stops for over/under voltage • Bower motor stops due to PCB over heating	• High AC line voltage to ID blower • Low AC line voltage to ID blower • High ambient temperatures • Incorrect wiring • Fan/motor obstruction or blockage in the airflow	• Verify line voltage to blower is within the range specified on the ID blower rating plate • See "Installation Instructions" for installation requirements • Check power to air handler blower • Check for obstruction on the fan/motor/ductwork • Check wiring • Replace motor
b7	E_b7	Incomplete Parameters Sent to Motor (MOTOR PARAMS)	ID blower motor does not have required parameters to function.	• Wrong / no shared data on the network • Locked motor rotor condition	• Check for locked rotor condition (see above error code for details) • Replace circuit board or motor
b9	E_b9	No Display	Low Indoor Airflow (without Electric Heat mode)	• Fan/motor obstruction or blocked filters • Restrictive ductwork or ductwork undersized • Wiring disconnected • Wrong outdoor/indoor combination • ID motor failure	• Check for obstruction on the fan/motor • Check ductwork/filter for blockage, clean filters • Remove obstruction. Verify all registers are fully open • Check the connections and the rotation of the motor • Verify the input voltage at the motor • Verify ductwork is appropriately sized for system. Resize/replace ductwork if needed • Replace motor
9b	E_9b	LOW ID AIR EH MODE	Low Indoor Airflow (with Electric Heat mode)	• Fan/motor obstruction or blocked filters • Restrictive ductwork or ductwork undersized • ID motor failure • Wiring disconnected	• Check for obstruction on the fan/motor • Check ductwork/filter for blockage, clean filters • Remove obstruction. Verify all registers are fully open • Check the connections and the rotation of the motor • Verify the input voltage at the motor • Verify ductwork is appropriately sized for system. Resize/replace ductwork if needed • Replace motor
70	E_70	EEV OPEN CKT	EEV disconnection detected	• Indoor EEV coil not connected • Incorrect wiring to EEV	• Check Indoor EEV coil connection (PCB and junction connector) • Replace EEV coil • Check the resistance value of EEV coil (refer service manual) • Replace the control board
73	E_73	LIQ TEMP FLT	Liquid side thermistor abnormality	• Open (or) short circuit of the liquid thermistor (X5A) • Liquid thermistor reading incorrect or values outside the normal range	• Check the connection to liquid thermistor (PCB and junction connector) • Check the resistance value of the thermistor (refer service manual) • Replace thermistor • Replace the control board
74	E_74	GAS TEMP FLT	Gas side thermistor abnormality	• Open (or) short circuit of the gas thermistor (X5A) • Gas thermistor reading incorrect or values outside the normal range	• Check the connection to gas thermistor (PCB and junction connector) • Check the resistance value of the thermistor (refer service manual) • Replace thermistor • Replace the control board
75	E_75	PRESSURE FLT	Pressure sensor abnormality	• Open (or) short circuit of the Pressure sensor (X15A) • Pressure sensor reading incorrect or values outside the normal range	• Check the connection to pressure sensor (PCB and junction connector) • Check the output voltage of the pressure sensor (refer service manual) • Replace pressure sensor • Replace the control board
77	E_77	TSTAT ID NO COM	Indoor Unit - Thermostat communication error (start-up & during operation)	• Incorrect wiring between ID unit and thermostat. *The system may have the communication error without error code 77 on the indoor PCB. Follow section 16.6 SYSTEM TROUBLESHOOTING* • Thermostat failure • Power interruption (low voltage)	• Check for thermostat and indoor unit wiring • Verify the input voltage at the ID unit and thermostat *After recovering the system with power supply, TSTAT ID NO COM will continue to be displayed on the thermostat within 2 minutes. The error code will be cleared automatically.* • Replace control board or thermostat • Press "LEARN" button on PCB for more than 5 seconds to reestablish network

DIAGNOSTIC CODES

7 SEGMENT LED DISPLAY	DESCRIPTION OF CONDITION	ERROR MESSAGE
On	Normal Operation	--
Eb	NO HTR KIT INSTALLED - SYSTEM CALLING FOR AUXILIARY HEAT (Minor Error Code)	(No Display)
Ed	HEATER KIT DIP SWITCHES NOT SET PROPERLY	Check Heater Kit Dip Switches
E5	FUSE OPEN	BLOWN FUSE
EF	AUXILIARY SWITCH OPEN	Auxiliary Contacts Open
d0	DATA NOT ON NETWORK	Data Not Yet On Network
d1	INVALID DATA ON NETWORK	Invalid Data On Netwrok
d4	INVALID MEMORY CARD DATA	Invalid Memory Card data
b0	BLOWER MOTOR NOT RUNNING	Blower Motor Not Running
b1	BLOWER MOTOR COMMUNICATION ERROR	Blower Communication Error
b2	BLOWER MOTOR HP (Horse power) MISMATCH	Blower Motor HP Mismatch
b3	BLOWER MOTOR OPERATING IN POWER, TEMP., OR SPEED LIMIT	(No Display)
b4	BLOWER MOTOR CURRENT TRIP OR LOST ROTOR	Blower Trip or Lost Rotor
b6	OVER/UNDER VOLTAGE TRIP OR OVER TEMPERATURE TRIP	Voltage or Temperature Trip
b7	INCOMPLETE PARAMETER SENT TO MOTOR	Incomplete Parameters Sent to Motor
b9	LOW INDOOR AIRFLOW (Minor Error Code) (without EH mode)	(No Display)
9b	LOW INDOOR AIRFLOW (Major Error Code) (EH mode only)	LOW ID AIR EH MODE
70	EEV DISCONNECTION DETECTED	EEV OPEN CKT
73	LIQUID SIDE THERMISTOR ABNORMALITY	LIQ TEMP FLT
74	GAS SIDE THERMISTOR ABNORMALITY	GAS TEMP FLT
75	PRESSURE SENSOR ABNORMALITY	PRESSURE FLT
77	INDOOR UNIT - THERMOSTAT COMMUNICATION ERROR (STARTUP OPERATION & DURING OPERATION)	TSTAT ID NO COM
Hu	HUMIDIFICATION DEMAND (Running without heating)	--
FC	FAN COOL - COMMUNICATING MODE ONLY (Fan Demand-Cool)	--
FH	FAN HEAT - COMMUNICATING MODE ONLY (Fan Demand-Heat)	--
F	FAN ONLY (Fan Demand-Manual)	--
H1	ELECTRIC HEAT LOW (Heat Demand, Back-up Heat Demand)	
H2	ELECTRIC HEAT HIGH (Heat Demand, Back-up Heat Demand)	
dF	DEFROST - COMMUNICATING MODE ONLY (note: defrost is displayed as H1 in a legacy setup)	--

MODE DISPLAY INTRODUCTION

A 2-digit display is provided on the printed circuit board (PCB) as a backup tool to the thermostat for accessing error codes and erasing error code history of the indoor unit. Follow the information provided in this section to learn how to use the mode display

DISPLAY

The display consists of 2 digits.

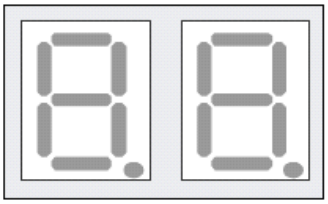

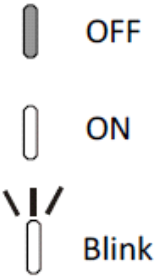

DISPLAY BUTTON LAYOUT

The display buttons shown can be used to navigate and select items:

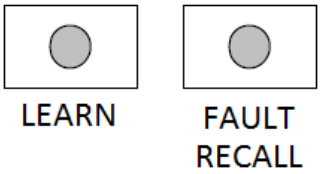

Example of button layout is shown above

FAULT CODE HISTORY NAVIGATION

This mode will allow the user to see the six most recent system faults. Please follow the flow chart to navigate to error codes from screen zero.

For a list of the fault codes, please see the TROUBLESHOOTING tables in this document.

It is also possible to erase all the diagnostics codes from this menu.

SETTING THE MODE DISPLAY

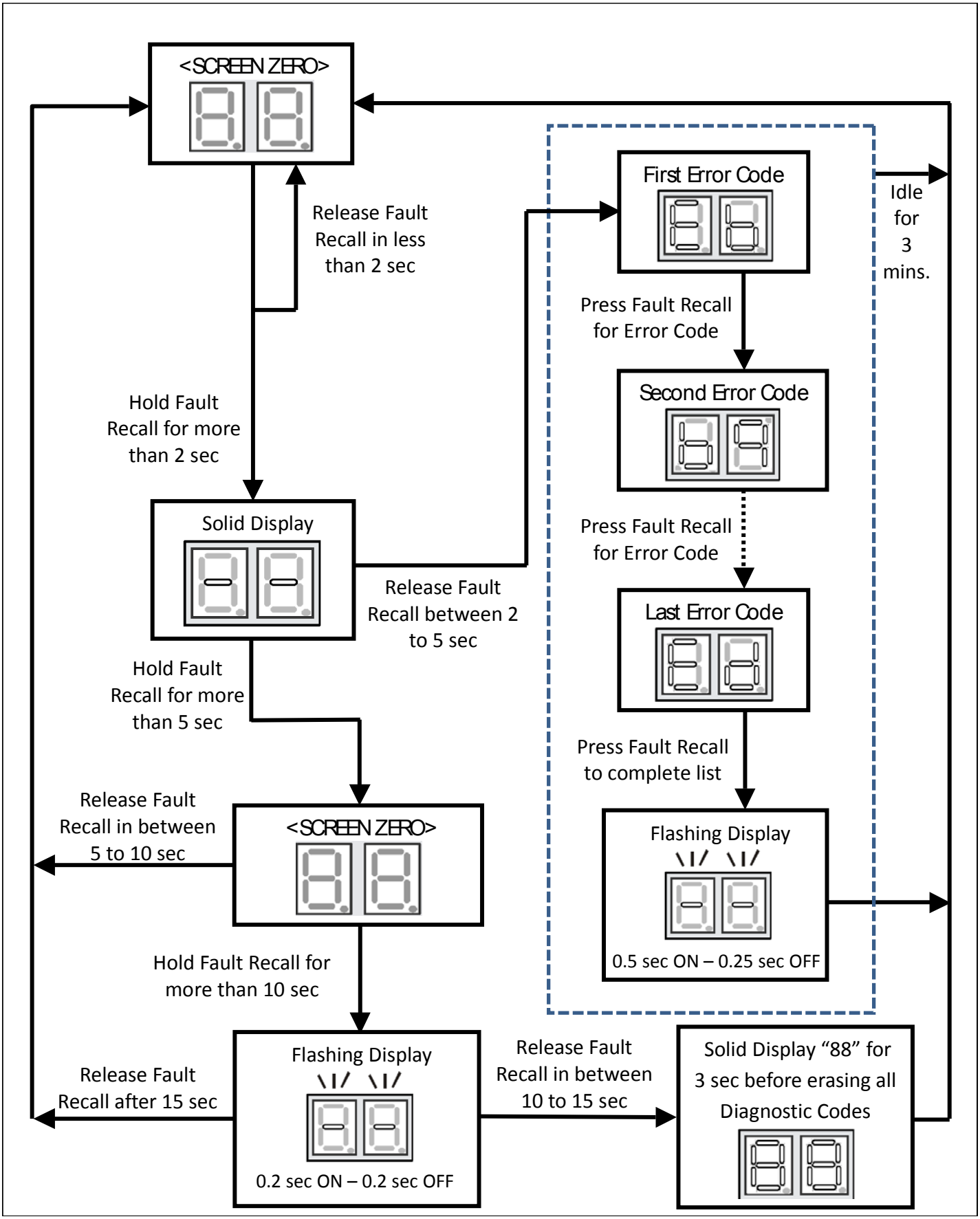

WIRING DIAGRAM

NOTE: THESE INSTRUCTIONS ARE SPECIFICALLY FOR AVPEC MODELS. DO **NOT** ATTEMPT TO APPLY THESE DIAGRAMS FOR ANY OTHER MODELS.

WARNING

HIGH VOLTAGE! DISCONNECT ALL POWER BEFORE SERVICING. MULTIPLE POWER SOURCES MAY BE PRESENT. FAILURE TO DO SO MAY CAUSE PROPERTY DAMAGE, PERSONAL INJURY OR DEATH.

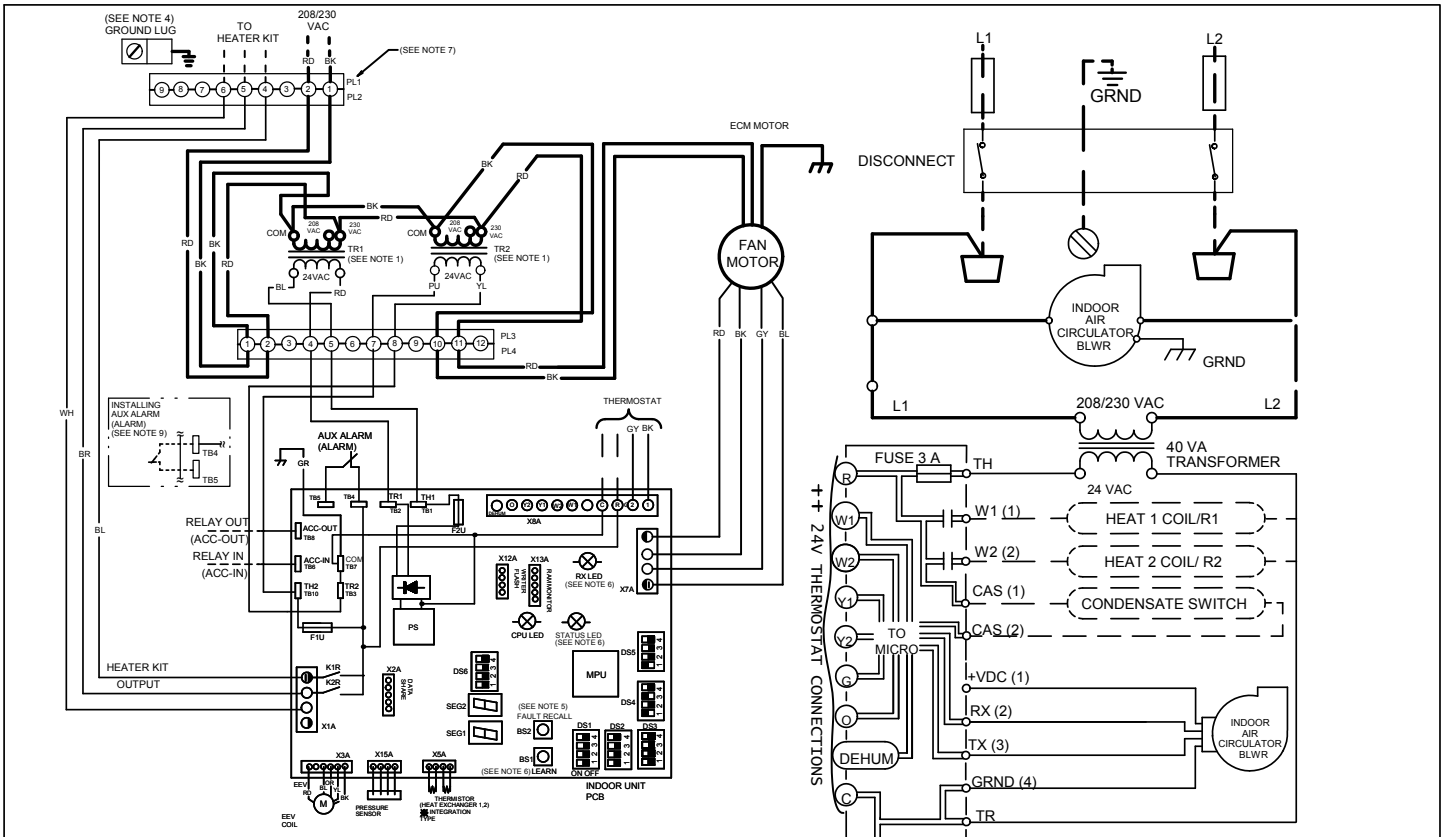

NOTES:

1. PLACE RED WIRES ON 208 V TERMINAL OF 2-TRANSFORMER (TR1/TR2) FOR 208 VAC OPERATION.
2. MANUFACTURER'S SPECIFIED REPLACEMENT PARTS MUST BE USED WHEN SERVICING.
3. IF ANY OF THE ORIGINAL WIRES AS SUPPLIED WITH THIS UNIT MUST BE REPLACED, IT MUST BE REPLACED WITH WIRING MATERIAL HAVING A TEMPERATURE RATING OF AT LEAST 105□C. USE COPPER CONDUCTORS ONLY.
4. UNIT MUST BE PERMANENTLY GROUNDED AND CONFORM TO N.E.C ANDLOCAL CODES.
5. TO RECALL THE LAST 6 FAULTS, MOST RECENT TO LEAST RECENT, DEPRESS FAULT RECALL BUTTON FOR MORE THAN 2 SECONDS WHILE IN STANDBY (NO THERMOSTAT INPUTS)
6. RED STATUS LED PROVIDES NETWORK STATUS. GREEN RX LED INDICATES NETWORK TRAFFIC. USE LEARN BUTTON TO RESET NETWORK.
7. DISCARD CONNECTOR PL1 WHEN INSTALLING OPTIONAL HEAT KIT.
8. THE POSITION OF SELECTOR SWITCHES (DS1 - DS6) INDICATE FACTORY SETTING.
9. REMOVE SHORT RED CIRCUITING WIRE AND PUT AUX ALARM SWITCH WHEN INSTALLING AUX ALARM SWITCH.
10. USE N.E.C CLASS 2 WIRE.

INTEGRATED CONTROL:

- LOW VOLTAGE
- LOW VOLTAGE FIELD
- HIGH VOLTAGE
- HIGH VOLTAGE FIELD
- JUNCTION
- TERMINAL
- INTERNAL TO
- RESISTOR
- OVERCURRENT PROT. DEVICE
- PLUG CONNECTION
- EQUIPMENT GND
- FIELD GROUND

COLOR CODES:

- BL - BLUE
- RD - RED
- YL - YELLOW
- OR - ORANGE
- BK - BLACK
- GY - GREY
- BR - BROWN
- GR - GREEN
- PU - PURPLE
- WH - WHITE

COMPONENT CODES:

- PL1, PL2 — POWER/HEATER CONNECTOR
- DS1 - DS6 — SELECTOR SWITCH
- TL — THERMAL LIMIT
- TR — TRANSFORMER
- F1U, F2U — FUSE LINK

0140A00501-A

Wiring is subject to change. Always refer to the wiring diagram on the unit for the most up-to-date wiring.

AIR HANDLER HOMEOWNER'S ROUTINE MAINTENANCE RECOMMENDATIONS

We strongly recommend a bi-annual maintenance checkup be performed before the heating and cooling seansons begin by a **qualified servicer**.

REPLACE OR CLEAN FILTER

IMPORTANT NOTE: Never operate unit without a filter installed as dust and lint will build up on internal parts resulting in loss of efficiency, equipment damage and possible fire.

An indoor air filter must be used with your comfort system. A properly maintained filter will keep the indoor coil of your comfort system clean. A dirty coil could cause poor operation and/or severe equipment damage.

Your air filter or filters could be located in your furnace, in a blower unit, or in "filter grilles" in your ceiling or walls. The installer of your air conditioner or heat pump can tell you where your filter(s) are, and how to clean or replace them.

Check your filter(s) at least once a month. When they are dirty, replace or clean as required. Disposable type filters should be replaced. Reusable type filters may be cleaned.

You may want to ask your dealer about high efficiency filters. High efficiency filters are available in both electronic and non-electronic types. These filters can do a better job of catching small airborne particles.

MOTORS

Indoor and outdoor fan motors are permanently lubricated and do not require additional oiling.

WARNING

HIGH VOLTAGE!
DISCONNECT ALL POWER BEFORE SERVICING OR INSTALLING THIS UNIT. MULTIPLE POWER SOURCES MAY BE PRESENT. FAILURE TO DO SO MAY CAUSE PROPERTY DAMAGE, PERSONAL INJURY OR DEATH.

ALUMINUM INDOOR COIL CLEANING (QUALIFIED SERVICER ONLY)

This unit is equipped with an aluminum tube evaporator coil. The safest way to clean the evaporator coil is to simply flush the coil with water. This cleaning practice remains as the recommended cleaning method for both copper tube and aluminum tube residential evaporator coils.

It has been determined that many coil cleaners and drain pan tablets contain corrosive chemicals that can be harmful to aluminum tube and fin evaporator coils. Even a one-time application of these corrosive chemicals can cause premature aluminum evaporator coil failure. Any cleaners that contain corrosive chemicals including, but not limited to, chlorine and hydroxides, should not be used.

An alternate cleaning method is to use one of the products listed in TP-109* to clean the coils. The cleaners listed are the only agents deemed safe and approved for use to clean round tube aluminum coils. TP-109 is also available on the web site in Partner Link > Service Toolkit.

NOTE: Ensure coils are rinsed well after use of any chemical cleaners.

BEFORE YOU CALL YOUR SERVICER

CAUTION

TO AVOID THE RISK OF EQUIPMENT DAMAGE OR FIRE, INSTALL THE SAME AMPERAGE BREAKER OR FUSE AS YOU ARE REPLACING. IF THE CIRCUIT BREAKER OR FUSE SHOULD OPEN AGAIN WITHIN THIRTY DAYS, CONTACT A QUALIFIED SERVICER TO CORRECT THE PROBLEM.
IF YOU REPEATEDLY RESET THE BREAKER OR REPLACE THE FUSE WITHOUT HAVING THE PROBLEM CORRECTED, YOU RUN THE RISK OF SEVERE EQUIPMENT DAMAGE.

- Check the thermostat to confirm that it is properly set.
- Wait 15 minutes. Some devices in the outdoor unit or in programmable thermostats will prevent compressor operation for awhile, and then reset automatically. Also, some power companies will install devices which shut off air conditioners for several minutes on hot days. If you wait several minutes, the unit may begin operation on its own.
- Check the electrical panel for tripped circuit breakers or failed fuses. Reset the circuit breakers or replace fuses as necessary.
- Check the disconnect switch near the indoor furnace or blower to confirm that it is closed.
- Check for obstructions on the outdoor unit . Confirm that it has not been covered on the sides or the top. Remove any obstruction that can be safely removed. If the unit is covered with dirt or debris, call a qualified servicer to clean it.
- Check for blockage of the indoor air inlets and outlets. Confirm that they are open and have not been blocked by objects (rugs, curtains or furniture).
- Check the filter. If it is dirty, clean or replace it.
- Listen for any unusual noise(s), other than normal operating noise, that might be coming from the outdoor unit. If you hear unusual noise(s) coming from the unit, call a qualified servicer.

THIS PAGE WAS LEFT BLANK INTENTIONALLY

THIS PAGE WAS LEFT BLANK INTENTIONALLY

THIS PAGE WAS LEFT BLANK INTENTIONALLY

CUSTOMER FEEDBACK

We are very interested in all product comments.
Please fill out the feedback form on one of the following links:
Goodman® Brand Products: (http://www.goodmanmfg.com/about/contact-us).
Amana® Brand Products: (http://www.amana-hac.com/about-us/contact-us).
You can also scan the QR code on the right for the product brand you purchased to be directed to the feedback page.

GOODMAN® BRAND

AMANA® BRAND

PRODUCT REGISTRATION

Thank you for your recent purchase. Though not required to get the protection of the standard warranty, registering your product is a relatively short process, and entitles you to additional warranty protection, except that failure by California and Quebec residents to register their product does not diminish their warranty rights.

For Product Registration, please register as follows:
Goodman® Brand products: (https://www.goodmanmfg.com/product-registration).
Amana® Brand products: (http://www.amana-hac.com/product-registration)
You can also scan the QR code on the right for the product brand you purchased to be directed to the Product Registration page.

GOODMAN® BRAND

AMANA® BRAND