Installation Instructions
APGM5 15.2 SEER2 "M" SERIES 2-4 Tons
Single Package Gas-Electric Heating & Cooling Units

Affix this manual and Users Information Manual adjacent to the unit.

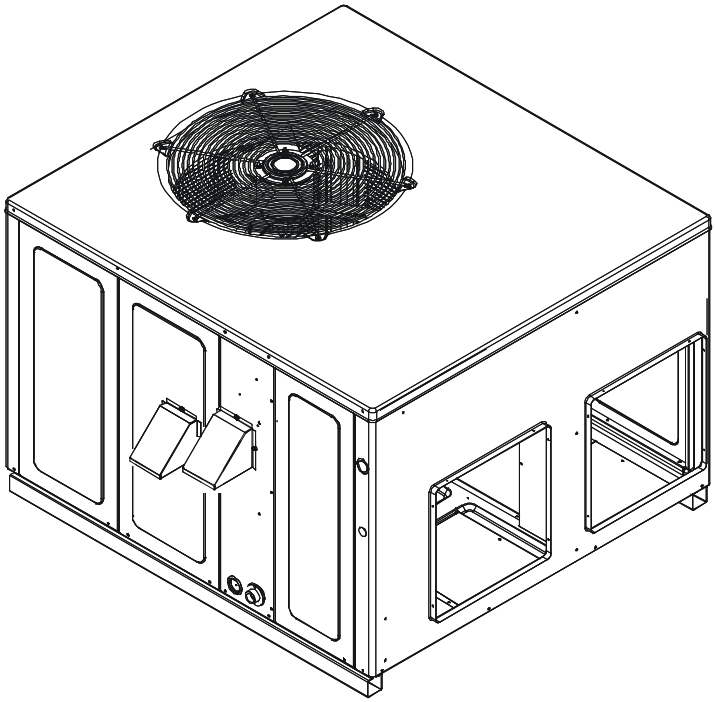

ATTENTION INSTALLING PERSONNEL

Prior to installation, thoroughly familiarize yourself with this Installation Manual. Observe all safety warnings. During installation or repair, caution is to be observed.

It is your responsibility to install the product safely and to educate the customer on its safe use.

RECOGNIZE THIS SYMBOL AS A SAFETY PRECAUTION

These installation instructions cover the **outdoor** installation of single package heating and cooling units. See the Specification Sheet applicable to your model for information regarding accessories.

WARNING

ONLY PERSONNEL THAT HAVE BEEN TRAINED TO INSTALL, ADJUST, SERVICE, MAINTENANCE OR REPAIR (HEREINAFTER, "SERVICE") THE EQUIPMENT SPECIFIED IN THIS MANUAL SHOULD SERVICE THE EQUIPMENT.

THIS EQUIPMENT IS NOT INTENDED FOR USE BY PERSONS (INCLUDING CHILDREN) WITH REDUCED PHYSICAL, SENSORY OR MENTAL CAPABILITIES, OR LACK OF EXPERIENCE AND KNOWLEDGE, UNLESS THEY HAVE BEEN GIVEN SUPERVISION OR INSTRUCTION CONCERNING USE OF THE APPLIANCE BY A PERSON RESPONSIBLE FOR THEIR SAFETY.

CHILDREN SHOULD BE SUPERVISED TO ENSURE THAT THEY DO NOT PLAY WITH THE EQUIPMENT.

THE MANUFACTURER WILL NOT BE RESPONSIBLE FOR ANY INJURY OR PROPERTY DAMAGE ARISING FROM IMPROPER SUPERVISION, SERVICE OR SERVICE PROCEDURES. IF YOU SERVICE THIS UNIT, YOU ASSUME RESPONSIBILITY FOR ANY INJURY OR PROPERTY DAMAGE WHICH MAY RESULT. IN ADDITION, IN JURISDICTIONS THAT REQUIRE ONE OR MORE LICENSES TO SERVICE THE EQUIPMENT SPECIFIED IN THIS MANUAL, ONLY LICENSED PERSONNEL SHOULD SERVICE THE EQUIPMENT. IMPROPER SUPERVISION, INSTALLATION, ADJUSTMENT, SERVICING, MAINTENANCE OR REPAIR OF THE EQUIPMENT SPECIFIED IN THIS MANUAL, OR ATTEMPTING TO INSTALL, ADJUST, SERVICE OR REPAIR THE EQUIPMENT SPECIFIED IN THIS MANUAL WITHOUT PROPER SUPERVISION OR TRAINING MAY RESULT IN PRODUCT DAMAGE, PROPERTY DAMAGE, PERSONAL INJURY OR DEATH.

WARNING

DO NOT BYPASS SAFETY DEVICES

NOTE: Please contact your distributor or our website for the applicable Specification Sheet referred to in this manual.

This Forced Air Central Unit Design complies with requirements embodied in The American National Standard / National Standard of Canada shown below:

ANSI Z21.47 / CSA-2.3 Gas-Fired Central Furnaces

ASK ABOUT ENERGY STAR

"IMPORTANT - This product has been designed and manufactured to meet ENERGY STAR® criteria for energy efficiency when matched with appropriate coil components. However, proper refrigerant charge and proper air flow are critical to achieve rated capacity and efficiency. Installation of this product should follow the manufacturer's refrigerant charging and air flow instructions. **Failure to confirm proper charge and air flow may reduce energy efficiency and shorten equipment life.**"

19001 Kermier Rd., Waller, TX 77484
www.goodmanmfg.com • www.amana-hac.com
© 2026 Daikin Comfort Technologies Manufacturing, Inc.
AMANA HEATING & AIR CONDITIONING is a registered trademark of Whirlpool Corporation or its related companies and is used under license.
All rights reserved.

IOA-3026D
06/2026

TABLE OF CONTENTS

REPLACEMENT PARTS 3
- Ordering Parts 3

SAFETY INSTRUCTIONS 3
- To The Installer 3
- To The Owner 3

GENERAL INFORMATION 5
- Transportation Damage 5

UNIT LOCATION 6
- All Installations: 6
- Ground Level Installations Only: 6
- Rooftop Installations Only: 6
- Roof Curb Installations Only: 7

RIGGING DETAILS 7

GAS PIPING 7
- High Altitude Derate (U.S. Installations Only) 8
- Piping 8
- Gas Piping Checks 9

PROPANE GAS INSTALLATIONS 9
- Tanks and Piping 9

ELECTRICAL WIRING 10
- Thermostat Location 10
- Single Stage Thermostat 10
- Alternate Fan Only Speed 11
- 24 Volt Dehumidistat Wiring 11
- High Voltage Wiring 11

CIRCULATING AIR AND FILTERS 12
- Airflow Conversion 12
- Ductwork 12
- Filters 12

VENTING 13
- Installation - Flue Hood Exhaust 13
- Installation - Combustion Air Intake Hood. 13

CONDENSATE DRAIN 13
- Condensate Drain Connection 13

NORMAL SEQUENCES OF OPERATION 13
- Heating 13
- Cooling 14
- Fan Only 14

STARTUP, ADJUSTMENTS, AND CHECKS 14
- Cooling Startup 18
- Checking Subcooling 18
- Checking Superheat 18

TROUBLESHOOTING 19
- Ignition Control Error Codes 19
- Fault Recall 19
- Abnormal Operation - Heating 19
  - *Internal Control Failure 19*
  - *External Lockout 19*
  - *Pressure Switch Stuck Open 20*
  - *Pressure Switch Stuck Closed 20*
  - *Primary Limit 20*
  - *Flame Detected with Gas Valve Closed ... 20*
  - *Low Flame Signal 20*
- Abnormal Operation - Cooling 20
  - *Short Cycle Compressor Delay 20*
  - *High Pressure Switch/Loss of Charge Switch 20*

MAINTENANCE 21
- Filter Replacement or Cleaning 21
- Cabinet Finish Maintenance 21
- Clean Outside Coil (Qualified Servicer Only) 21
- Condenser, Evaporator, and Induced Draft Motors 21
- Flame Sensor (Qualified Servicer Only) 21
- Flue Passages (Qualified Servicer Only) 21
- Cleaning Flue Passages (Qualified Servicer Only) 21
- Main Burner Flame (Qualified Servicer Only) 21
- Cleaning Burners 22

ACCESSORIES AND FUNCTIONAL PARTS 22
- Sheet Metal Accessories 22
- Functional Parts 22
- General Information 22

APPENDIX 23
- Ignition Control Diagnostic Indicator Chart 23
- Heating Timing Chart 24
- Cooling Timing Chart 24
- Unit Dimensions 25
- Wiring Diagram 26
- Blower Performance Data 27
- CFM Settings and DIP Switch Output 28
- Homeowner's Routine Maintenance Recommendations 29
- Start-up Checklist 30

REPLACEMENT PARTS

Ordering Parts

When reporting shortages or damages, or ordering repair parts, give the complete unit model and serial numbers as stamped on the unit's nameplate.

Replacement parts for this appliance are available through your contractor or local distributor. Your nearest distributor can be located online at **https://partner.goodmanmfg.com/** or by contacting:

HOMEOWNER'S SUPPORT
GOODMAN COMPANY, L.P.
19001 KERMIER ROAD
WALLER, TX 77484
855-770-5678

SAFETY INSTRUCTIONS

To The Installer

Before installing this unit, please read this manual to familiarize yourself on the specific items which must be adhered to, including maximum external static pressure to unit, air temperature rise, minimum or maximum CFM and motor speed connections.

To The Owner

A warranty certificate is provided with the unit. Read the warranty carefully and note what is covered. Keep the warranty certificate in a safe place so you can find it when necessary.

Keep this literature in a safe place for future reference.

WARNING

If the information in these instructions is not followed exactly, a fire or explosion may result causing property damage, personal injury or loss of life.
- do not store or use gasoline or other flammable vapors and liquids in the vicinity of this or any other appliance.
- WHAT TO DO IF YOU SMELL GAS:
  - Do not try to light any appliance.
  - Do not touch any electrical switch; do not use any phone in your building.
  - Immediately call your gas supplier from a neighbor's phone. Follow the gas supplier's instructions. If you cannot reach your gas supplier, call the fire department.
- Installation and service must be performed by a qualified installer, service agency or the gas supplier.

WARNING

Should overheating occur or the gas supply fail to shut off, turn off the manual gas shutoff valve external to the furnace before turning off the electrical supply.

WARNING

Do not connect to or use any device that is not design certified by the manufacturer for use with this unit. Serious property damage, personal injury, reduced unit performance and/or hazardous conditions may result from the use of such non-approved devices.

WARNING

Heating unit should not be utilized without reasonable, routine, inspection, maintenance and supervision. If the building in which any such device is located will be vacant, care should be taken that such device is routinely inspected, maintained and monitored. In the event that the building maybe exposed to freezing temperatures and will be vacant, all water-bearing pipes should be drained, the building should be properly winterized, and the water source closed. In the event that the building may be exposed to freezing temperatures and will be vacant, any hydronic coil units should be drained as well and, in such case, alternative heat sources should be utilized.

WARNING

To avoid property damage, personal injury or death, do not use this unit if any part has been under water. Immediately call a qualified service technician to inspect the unit and to replace any part of the control system and any gas control having been under water.

WARNING

This unit must not be used as a "construction heater" during the finishing phases of construction on a new structure. This type of use may result in premature failure of the unit due to extremely low return air temperatures and exposure to corrosive or very dirty atmosphere.

WARNING

High Voltage!
Disconnect ALL power before servicing or installing thus unit. Multiple power sources may be present. Failure to do so may cause property damage, personal injury, or death.

WARNING

To prevent the risk of property damage, personal injury, or death, do not store combustible materials or use gasoline or other flammable liquids or vapors in the vicinity of this appliance.

WARNING

FIRE HAZARD
Failure to follow the safety warnings exactly could result in serious injury, death or property damage. Never test for gas leaks with an open flame. Use commercially available soap solution made specifically for the detection of leaks to check all connections. A fire or explosion may result causing property damage, persona l injury, or loss of life.

AVERTISSEMENT

RISQUE D'INCENDIE OU D'EXPLOSION

Si Les Consignes De Sécurité Ne Sont Pas Suivies À La Lettre, Cela Peut Entraîner La Mort, De Graves Blessures Ou Des Dommages Matériels. Ne Jamais Vérifier La Présence De Fuites De Gaz Au Moyen D'une Flamme Nue. Vérifier Tous Les Raccords En Utilisant Une Solution Savonneuse Commerciale Conçue Spécialement Pour La Détection De Fuites. Un Incendie Ou Une Explosion Risque De Se Produire, Ce Qui Peut Entraîner La Mort, Des Blessures Ou Des Dommages Matériels.

WARNING

CARBON MONOXIDE POISONING HAZARD

Failure To Follow The Steps Outlined Below For Each Appliance Connected To The Venting System Being Placed Into Operation Could Result In Carbon Monoxide Poisoning Or Death. The Following Steps Shall Be Followed For Each Appliance Connected To The Venting System Being Placed Into Operation, While All Other Appliances Connected To The Venting System Are Not In Operation:

1) Seal Any Unused Openings In The Venting System.
2) Inspect The Venting System For Proper Size And Horizontal Pitch, As Required In The National Fuel Gas Code, Ansi Z223.1/nfpa 54 Or The Natural Gas And Propane Installation Code, Csa B149.1 And These Instructions. Determine That There Is No Blockage Or Restriction, Leakage, Corrosion And Other Deficiencies Which Could Cause An Unsafe Condition.
3) As Far As Practical, Close All Building Doors And Windows And All Doors Between The Space In Which The Appliance(s) Connected To The Venting System Are Located And Other Spaces Of The Building.
4) Close Fireplace Dampers.
5) Turn On Clothes Dryers And Any Appliance Not Connected To The Venting System. Turn On Any Exhaust Fans, Such As Range Hoods And Bathroom Exhausts, So They Are Operating At Maximum Speed. Do Not Operate A Summer Exhaust Fan.
6) Follow The Lighting Instructions. Place The Appliance Being Inspected Into Operation. Adjust The Thermostat So Appliance Is Operating Continuously.
7) Test For Spillage From Draft Hood Equipped Appliances At The Draft Hood Relief Opening After 5 Minutes Of Main Burner Operation. Use The Flame Of A Match Or Candle.
8) If Improper Venting Is Observed During Any Of The Above Tests, The Venting System Must Be Corrected In Accordance With The National Fuel Gas Code, Ansi Z223.1/nfpa 54 And/or Natural Gas And Propane Installation Code, Csa B149.1.
9) After It Has Been Determined That Each Appliance Connected To The Venting System Properly Vents When Tested As Outlined Above, Return Doors, Windows, Exhaust Fans, Fireplace Dampers And Any Other Gas-fired Burning Appliance To Their Previous Conditions Of Use.

AVERTISSEMENT

RISQUE D'INTOXICATION AU MONOXYDE DE CARBONE

Si les étapes décrites ci-dessous ne sont pas suivies pour chacun des appareils raccordés au système de ventilation au moment de sa mise en marche, cela peut entraîner une intoxication au monoxyde de carbone ou la mort. Les étapes suivantes doivent être suivies pour chacun des appareils raccordés au système de ventilation au moment de sa mise en marche, alors que tous les autres appareils raccordés au système de ventilation ne sont pas en marche:

1) Sceller toutes les ouvertures inutilisées du système de ventilation.
2) Inspecter le système de ventilation afin de vérifier si la taille et l'inclinaison par rapport à l'horizontale sont conformes aux exigences du National Fuel Gas Code, ANSI Z223.1/NFPA 54 ou du Code d'installation du gaz naturel et du propane, CSA B149.1 et à ces instructions. Vérifier qu'il n'y pas d'obstruction ou de pourraient entraîner une situation dangereuse.
3) Si possible, fermer toutes les portes et fenêtres du bâtiment ainsi que toutes les portes séparant l'endroit où se trouvent les appareils raccordés au système de ventilation et less autres zones du bâtiment.
4) Fermer le registre des foyers.
5) Mettre les sécheuses en marche ainsi que tous les autres appareils qui ne sont pas raccordés au systéme de ventilation. Mettre en marche tous les ventilateurs de tirage, comme celui des hottes de cuisine et des salles de bains, et les régler à la puissance maximale. Ne pas mettre en marche les ventilateurs d'été.
6) Suivre les instructions d'allumage. Mettre en marche l'appareil soumis à l'inspection. Régler le thermostat de manièr à ce que l'appareil fonctionne en continu.
7) Vérifier la présence de fuite au niveau de l'ouverture du coupe-tirage des appareils qui en sont dotés après 5 minutes de fontionnement du brûleur principal. Utiliser la flamme d'une allumette ou d'une bougie.
8) Si un problème de ventilation est observé pendant l'un des essaid décrits ci-dessus, des correctifs doivent être apportés au système de ventilation conformé National Fuel Gas Code, Ansi Z223.1/nfpa 54 And/or Natural Gas And Propane Installation Code, Csa B149.1.
9) Une fois qu'il été déterminé que chaque appareil raccordé au système de ventilation fontionne correctement au moyen des essais décrits ci-dessus, les portes, les fenêtres, les ventilateurs, les registres de foyer et tous les autres appareils de combustion alimentés au gaz doivent être remis dans leur état initial.

DANGER

CARBON MONOXIDE POISONING HAZARD

Special Warning for Installation of Furnace or Air Handling Units in Enclosed Areas such as Garages, Utility Rooms or Parking Areas

Carbon monoxide producing devices (such as an automobile, space heater, gas water heater, etc.) should not be operated in enclosed areas such as unventilated garages, utility rooms or parking areas because of the danger of carbon monoxide (CO) poisoning resulting from the exhaust emissions. If a furnace or air handler is installed in an enclosed area such as a garage, utility room or parking area and a carbon monoxide producing device is operated therein, there must be adequate, direct outside ventilation.

This ventilation is necessary to avoid the danger of CO poisoning which can occur if a carbon monoxide producing device continues to operate in the enclosed area. Carbon monoxide emissions can be (re)circulated throughout the structure if the furnace or air handler is operating in any mode.

CO can cause serious illness including permanent brain damage or death. B10259-216

DANGER
PELIGRO

RIESGO DE INTOXICACIÓN POR MONÓXIDO DE CARBONO

Advertencia especial para la instalación de calentadores ó manejadoras de aire en áreas cerradas como estacionamientos ó cuartos de servicio.

Los equipos ó aparatos que producen monóxido de carbono (tal como automóvil, calentador de gas, calentador de agua por medio de gas, etc) no deben ser operados en áreas cerradas debido al riesgo de envenenamiento por monóxido de carbono (CO) que resulta de las emisiones de gases de combustión. Si el equipo ó aparato se opera en dichas áreas, debe existir una adecuada ventilación directa al exterior.

Esta ventilación es necesaria para evitar el peligro de envenenamiento por CO, que puede ocurrir si un dispositivo que produce monóxido de carbono sigue operando en el lugar cerrado.

Las emisiones de monóxido de carbono pueden circular a través del aparato cuando se opera en cualquier modo.

El monóxido de carbono puede causar enfermedades severas como daño cerebral permanente ó muerte. B10259-216

DANGER

RISQUE D'EMPOISONNEMENT AU MONOXYDE DE CARBONE

Advertencia especial para la instalación de calentadores ó manejadoras de aire en áreas cerradas como estacionamientos ó cuartos de servicio.

Avertissement special au sujet de l'installation d'appareils de hauffage ou de traitement d'air dans des endroits clos, tets les garages, les locaux d'entretien et les stationnements. Evitez de mettre en marche les appareils produisant du monoxyde de carbone (tels que les automobile, les appareils de chauffage autonome,etc.) dans des endroits non ventilés tels que les d'empoisonnement au monoxyde de carbone. Si vous devez faire fonctionner ces appareils dans un endroit clos, assures-vous qu'il y ait une ventilation directe provenant de l'exterier.

Cette ventilation est nécessaire pour éviter le danger d'intoxication au CO pouvant survenir si un appareil produisant du monoxyde de carbone continue de fonctionner au sein de la zone confinée.

Les émissions de monoxyde de carbone peuvent etre recircules dans les endroits clos, si l'appareil de chauffage ou de traitement d'air sont en marche.

Le monoxyde de carbone peut causer des maladies graves telles que des dommages permanents au cerveau et meme la mort. B10259-216

GENERAL INFORMATION

WARNING

TO PREVENT THE RISK OF PROPERTY DAMAGE, PERSONAL INJURY, OR DEATH DUE TO FIRE, EXPLOSIONS, SMOKE, SOOT, CONDENSATION, ELECTRIC SHOCK OR CARBON MONOXIDE, THUS UNIT MUST BE PROPERLY INSTALLED REPAIRED, OPERATED, AND MAINTAINED.

This unit is approved for outdoor installation ONLY. Rated performance is achieved after 20 hours of operation. Rated performance is delivered at the specified airflow. See outdoor unit specification sheet for split system models or product specification sheet for packaged and light commercial models. Specification sheets can be found at www.amana-hac.com for Amana® brand products. Within the website, please select the residential or commercial products menu and then select the submenu for the type of product to be installed, such as air conditioners or heat pumps, to access a list of product pages that each contain links to that model's specification sheet.

To assure that your unit operates safely and efficiently, it must be installed, operated, and maintained in accordance with these installation and operating instructions, all local building codes and ordinances, or in their absence, with the latest edition of the National Fuel Gas Code NFPA 54/ANSI Z223.1 and National Standard of Canada CAN/CSA B149 Installation Codes.

The heating and cooling capacities of the unit should be greater than or equal to the design heating and cooling loads of the area to be conditioned. The loads should be calculated by an approved method or in accordance with A.S.H.R.A.E. Guide or Manual J - Load Calculations published by the Air Conditioning Contractors of America.

Obtain from:
American National Standards Institute
25 West 43rd Street, 4th Floor
New York, NY 10036

TRANSPORTATION DAMAGE

Check the carton upon arrival for external damage. If damage is found, a request for inspection by carrier agent should be made in writing immediately.

Carefully inspect the unit for damage including damage to the cabinetry. Any bolts or screws which may have loosened in transit must be re-tightened. In the event of damage, the receiver should:

1. Make notation on delivery receipt of any visible damage to shipment or container.
2. Notify carrier promptly and request an inspection.
3. In case of concealed damage, carrier should be notified as soon as possible-preferably within 5 days.
4. File the claim with the following supporting documents:
   a. Original Bill of Lading, certified copy, or indemnity bond.
   b. Original paid freight bill or indemnity in lieu thereof.
   c. Original invoice or certified copy thereof, showing trade and other discounts or reductions.
   d. Copy of the inspection report issued by carrier representative at the time damage is reported to the carrier. The carrier is responsible for making prompt inspection of damage and for a thorough investigation of each claim. The distributor or manufacturer will not accept claims from dealers for transportation damage.

NOTE: When inspecting the unit for transportation damage, remove all packaging materials. Recycle or dispose of the packaging material according to local codes.

UNIT LOCATION

WARNING

TO PREVENT POSSIBLE EQUIPMENT DAMAGE, PROPERTY DAMAGE, PERSONAL INJURY OR DEATH, THE FOLLOWING BULLET POINTS MUST BE OBSERVED WHEN INSTALLING THIS UNIT.

IMPORTANT NOTE: Remove wood shipping rails prior to installation of the unit.

ALL INSTALLATIONS:

- For proper flame pattern within the heat exchanger and proper condensate drainage, the unit must be mounted level.
- The flue outlet hood must be at least 12 inches from any opening through which flue gases could enter a building, and at least three feet above any forced air inlet located within ten feet. The economizer/ manual fresh air intake/motorized fresh air intake and combustion air inlet mounted on the unit are not affected by this restriction.
- To avoid possible corrosion of the heat exchanger, do not locate the unit in an area where the outdoor air (i.e. combustion air for the unit) will be frequently contaminated by compounds containing chlorine or fluorine. Common sources of such compounds include swimming pool chemicals and chlorine bleaches, paint stripper, adhesives, paints, varnishes, sealers, waxes (which are not yet dried) and solvents used during construction and remodeling. Various commercial and industrial processes may also be sources of chlorine/ fluorine compounds.
- To avoid possible illness or death of the building occupants, do NOT locate outside air intake device (economizer, manual fresh air intake, motorized fresh air intake) too close to an exhaust outlet, gas vent termination, or plumbing vent outlet. For specific distances required, consult local codes.
- Allow minimum clearances from the enclosure for fire protection, proper operation, and service access. These clearances must be permanently maintained.
- The combustion air inlet and flue outlet hoods on the unit must never be obstructed. If used, do not allow the economizer/manual fresh air damper/ motorized fresh air damper to become blocked by snow or debris. In some climates or locations, it may be necessary to elevate the unit to avoid these problems.
- When the unit is heating, the temperature of the return air entering the unit must be between 50° F and 100° F.
- Units manufactured on or after May 1, 2017 are not permitted to be used in Canada for heating of buildings or structures under construction.

GROUND LEVEL INSTALLATIONS ONLY:

- When the unit is installed on the ground adjacent to the building, a level concrete (or equal) base is recommended. Prepare a base that is 3” larger than the package unit footprint and a minimum of 3” thick.
- The base should also be located where no runoff of water from higher ground can collect in the unit.
- The top of the unit should be completely unobstructed. If units are to be located under an overhang, there should be a minimum of 48” clearance and provisions made to deflect the warm discharge air out from the overhang.
- Close to the wall application assures free, unobstructed air to the other two sides. In more confined application spaces, such as corners provide a minimum 12” clearance on all air inlet sides. Allow 36” minimum for service access to the compressor compartment and controls.
- Unit should be located a minimum of 3” away from the wall with the connections facing the wall

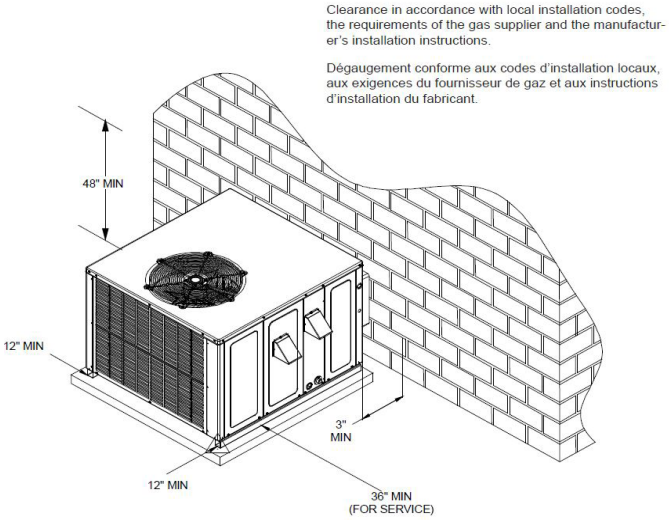

NOTE: Roof overhang should be no more than 36".

Outside Slab Installation

ROOFTOP INSTALLATIONS ONLY:

NOTE: To ensure proper condensate drainage, unit must be installed in a level position.

- To avoid possible property damage or personal injury, the roof must have sufficient structural strength to carry the weight of the unit(s) and snow or water loads as required by local codes. Consult a structural engineer to determine the weight capabilities of the roof.
- The unit may be installed directly on wood floors or on Class A, Class B, or Class C roof covering material.
- To avoid possible personal injury, a safe, flat surface for service personnel should be provided.

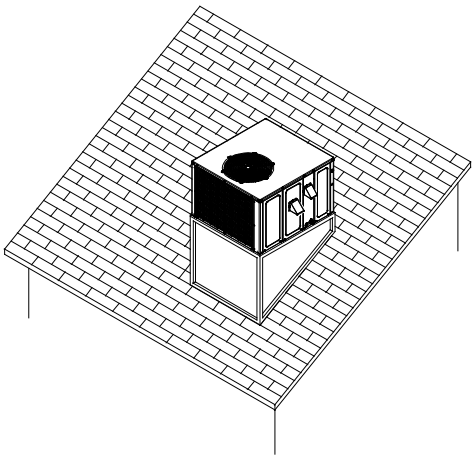

Rooftop Installation

Roof Curb Installations Only:

- Sufficient structural support must be determined prior to locating and mounting the curb and package unit.
- Ductwork must be constructed using industry guidelines. The duct work must be placed into the roof curb before mounting the package unit.
- Curb insulation, cant strips, flashing and general roofing material are furnished by the contractor.

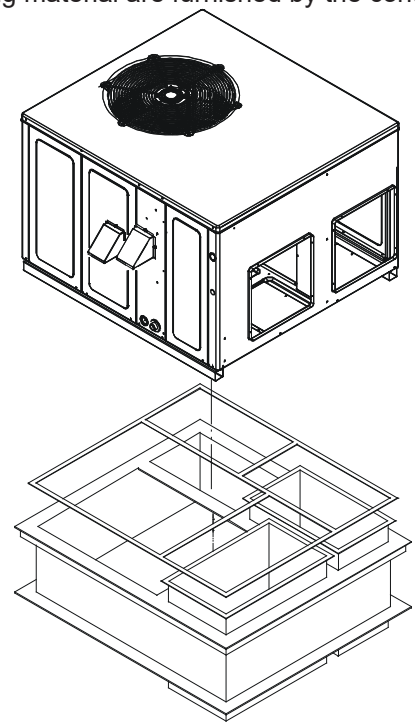

Roof Curb Installation

MODEL	ROOF CURB
APGM5(24-48)***M41**	D14CRBPGCHMA

RIGGING DETAILS

WARNING

To prevent property damage, the unit should remain in an upright position during all rigging and moving operations. To facilitate lifting and moving when a crane is used, place the unit in an adequate cable sling.

IMPORTANT NOTE: If using bottom discharge with roof curb, ductwork should be attached to the curb prior to installing the unit. Ductwork dimensions are shown in roof curb installation instructions.

Refer to the Roof Curb Installation Instructions for proper curb installation. Curbing must be installed in compliance with the National Roofing Contractors Association Manual.

Lower unit carefully onto roof mounting curb. While rigging unit, center of gravity will cause condenser end to be lower than supply air end.

Unit should be lifted by the **4 holes** located at the **base frame corners**. Lifting cables should be attached to the unit with shackles. While rigging unit, center of gravity will cause the condenser end (heavier) to be lower than supply air end. The distance between the unit and the crane hook up should not be **less** than **60”**. The spreaders bars should span over the unit to prevent damage to the cabinet from the lifting cables.

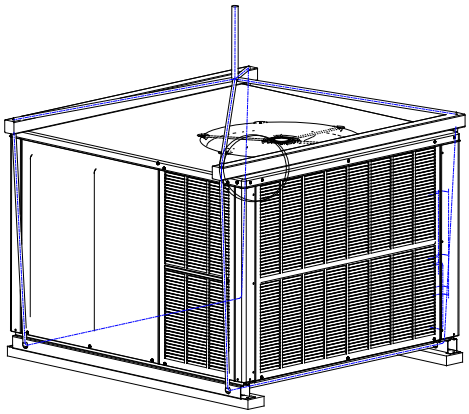

Rigging

GAS PIPING

IMPORTANT NOTE: This unit is factory set to operate on natural gas at the altitudes shown on the rating plate.

WARNING

TO PREVENT PROPERTY DAMAGE, PERSONAL INJURY OR DEATH WHEN USING PROPANE GAS ALONE OR AT HIGHER ALTITUDES, OBTAIN AND INSTALL THE PROPER CONVERSION KIT(S). FAILURE TO DO SO CAN RESULT IN UNSATISFACTORY OPERATION AND/OR EQUIPMENT DAMAGE. HIGH ALTITUDE KITS ARE FOR THE U.S. INSTALLATIONS ONLY AND ARE NOT APPROVED FOR THE USE IN CANADA.

LP Conversion

The rating plate is stamped with the model number, type of gas and gas input rating. Make sure the unit is equipped to operate on the type of gas available. Conversion to LP gas is permitted with the use of a factory authorized conversion kit. Contact your distributor or refer to the specification sheet for your model for a listing of approved LP gas conversion kit(s). Refer to the Installation Manual provided with the LP kit for conversion from natural gas to propane gas.

LP CONVERSION KIT	MODEL
LPM-08	TWO-STAGE HEATING MODELS

INLET GAS PRESSURE	
Natural	Min. 5.0" W.C., Max. 10.0" W.C.
Propane	Min. 11.0" W.C., Max. 13.0" W.C.

Inlet Gas Pressure Must Be Within the Minimum and Maximum Value Shown in Table Above.

The minimum supply pressure should not vary from that shown in the Inlet Gas Pressure table because this could prevent the unit from having dependable ignition. In addition, gas input to the burners must not exceed the rated input shown on the rating plate. Overfiring of the unit could result in premature heat exchanger failure.

HIGH ALTITUDE DERATE (U.S. INSTALLATIONS ONLY)

Installation of this furnace at altitudes above 2000 ft (610 m) shall be made in accordance with the Listed High Altitude Conversion Kit available with this furnace.

IMPORTANT NOTE: The gas/electric units naturally derate with altitude. Do not attempt to increase the firing rate by changing orifices or increasing the manifold pressure. This can cause poor combustion and equipment failure. At all altitudes, the manifold pressure must be within 0.3 inches W.C. of that listed on the nameplate for the fuel used. At all altitudes and with either fuel, the air temperature rise must be within the range listed on the unit nameplate. Contact your distributor or refer to the specification sheet for your model for listing of approved high altitude conversion kit(s). Refer to the Installation Manual provided with the high altitude kit for altitude adjustments. Use HA03 for installations above 2000'.

NOTE: No changes are required up to 2,000 feet. Use the appropriate high altitude kit above 2,000 feet.

PIPING

IMPORTANT NOTE: To avoid possible unsatisfactory operation or equipment damage due to under firing of equipment, do not undersize the natural/propane gas piping from the meter/tank to the unit. When sizing a trunk line, include all appliances on that line that could be operated simultaneously.

The rating plate is stamped with the model number, type of gas and gas input rating. Make sure the unit is equipped to operate on the type of gas available. The gas line installation must comply with local codes, or in the absence of local codes, with the latest edition of the National Fuel Gas Code NFPA 54/ANSI Z223.1.

Natural Gas Connection

Natural Gas Capacity of Pipe in Cubic Feet of Gas Per Hour (CFH)					
Length of Pipe in Feet	Nominal Black Pipe Size (inches)				
	1/2	3/4	1	1 1/4	1 1/2
10	132	278	520	1050	1600
20	92	190	350	730	1100
30	73	152	285	590	980
40	63	130	245	500	760
50	56	115	215	440	670
60	50	105	195	400	610
70	46	96	180	370	560
80	43	90	170	350	530
90	40	84	160	320	490
100	38	79	150	305	460

Pressure = .50 PSIG or less and Pressure Drop of 0.3" W.C. (Based on 0.60 Specific Gravity Gas)

$$\text{CFH} = \frac{\text{BTUH Furnace Input}}{\text{Heating Value of Gas (BTU/Cubic Foot)}}$$

Refer to the Proper Piping Practice drawing for the general layout at the unit. The following rules apply:

1. Use black iron pipe and fittings for the supply piping. The use of a flex connector and/or copper piping is permitted as long as it is in agreement with local codes.
2. Use pipe joint compound on male threads only. Pipe joint compound must be resistant to the action of the fuel used.
3. Use ground joint unions.
4. Install a drip leg to trap dirt and moisture before it can enter the gas valve. The drip leg must be a minimum of three inches long.
5. Use two pipe wrenches when making connection to the gas valve to keep it from turning.
6. Install a manual shut-off valve in a convenient location (within six feet of unit) between the meter and the unit.
7. Tighten all joints securely.
8. The unit must be connected to the building piping by one of the following methods:
   - Rigid metallic pipe and fittings
   - Semirigid metallic tubing and metallic fittings (Aluminum alloy tubing must not be used in exterior locations)

- Listed gas appliance connectors used in accordance with the terms of their listing that are completely in the same room as the equipment
- In the prior two methods above the connector or tubing must be protected from physical and thermal damage. Aluminum alloy tubing and connectors must be coated to protect against external corrosion when in contact with masonry, plaster or insulation or are subject to repeated wettings by liquids (water - not rain water, detergents or sewage)

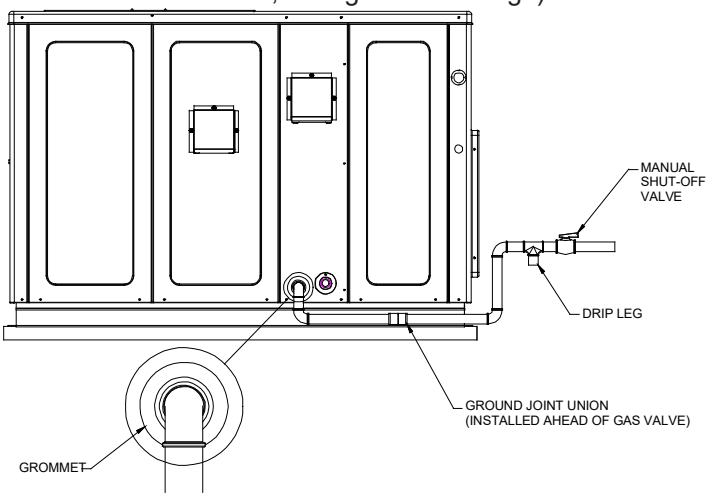

Proper Piping Practice

NOTE: The unit gas supply entrance is factory sealed with plugs. Keep plugs in place until gas supply is ready to be installed. Once ready, replace the plugs with the supplied grommets and install gas supply line.

Gas Piping Checks

CAUTION

To prevent property damage or personal injury due to fire, the following instructions must be performed regarding gas connections and pressure testing.

- **The units and its gas connections must be leak tested before placing in operation. Because of the danger of explosion or fire, never use a match or open flame to test for leaks. Never exceed specified pressures for testing. Higher pressure may damage gas valve and cause overfiring which may result in premature heat exchanger failure.**
- **This unit and its shut-off valve must be disconnected from the gas supply during any pressure testing of that system at pressures in excess of 1/2 PSIG (3.48 kPA).**
- **This unit must be isolated from the gas supply system by closing its manual shut-off valve during any pressure testing of the gas supply piping system at test pressures equal to or less than 1/2 PSIG (3.48 kPA).**

WARNING

To avoid property damage or personal injury, be sure there is NO OPEN FLAME in the vicinity during air bleeding.

There will be air in the gas supply line after testing for leaks on a new installation. Therefore, the air must be bled from the line by loosening the ground joint union until pure gas is expelled. Tighten union and wait for five minutes until all gas has been dissipated in the air. Be certain there is no open flame in the vicinity during air bleeding procedure. The unit is placed in operation by closing the main electrical disconnect switch for the unit.

PROPANE GAS INSTALLATIONS

IMPORTANT NOTE: For Natural gas to LP gas conversion, Conversion Kit “LPM-08” must be used. Consult your dealer for appropriate conversion kit(s).

All propane gas equipment must conform to the safety standards of the National Board of Fire Underwriters (See NBFU Manual 58).

For satisfactory operation, propane gas supply pressure must be within 9.7 - 10.3 inches W.C. at the manifold with all gas appliances in operation. Maintaining proper gas pressure depends on three main factors:

1. Vaporization rate, which depends on (a) temperature of the liquid, and (b) wetted surface area of the container or containers.
2. Proper pressure regulation.
3. Pressure drop in lines between regulators, and between second stage regulator and the appliance. Pipe size required will depend on length of pipe run and total load of all appliances.

Tanks and Piping

Complete information regarding tank sizing for vaporization, recommended regulator settings and pipe sizing is available from most regulator manufacturers and propane gas suppliers.

Since propane gas will quickly dissolve white lead or most standard commercial compounds, special pipe dope must be used. Shellac base compounds resistant to the actions of liquefied petroleum gases such as Gasolac®, Stalactic®, Clyde’s® or John Crane® are satisfactory.

See Typical Propane Gas Piping figure for typical piping arrangement.

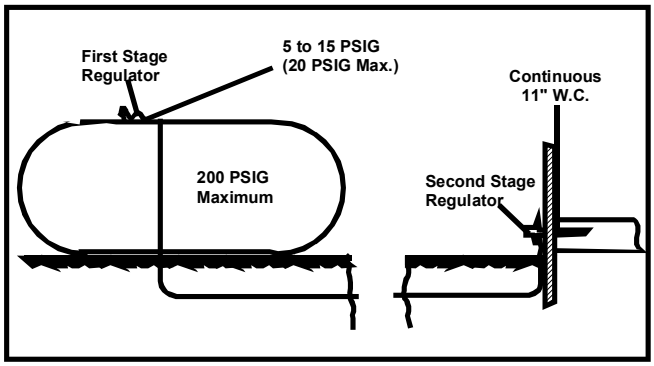

Typical Propane Gas Piping

Sizing Between First and Second Stage Regulator
Maximum Propane Capacities listed are based on 1 PSIG Pressure Drop at 10 PSIG Setting. Capacities in 1,000 BTU/HR

PIPE OR TUBING LENGTH, FEET	TUBING SIZE, O.D., TYPE L					NOMINAL PIPE SIZE, SCHEDULE 40	
	3/8"	1/2"	5/8"	3/4"	7/8"	1/2"	3/4"
30	309	700	1,303	2,205	3,394	1,843	3,854
40	265	599	1,115	1,887	2,904	1,577	3,298
50	235	531	988	1,672	2,574	1,398	2,923
60	213	481	896	1,515	2,332	1,267	2,649
70	196	446	824	1,394	2,146	1,165	2,437
80	182	412	767	1,297	1,996	1,084	2,267
90	171	386	719	1,217	1,873	1,017	2,127
100	161	365	679	1,149	1,769	961	2,009
150	130	293	546	923	1,421	772	1,613
200	111	251	467	790	1,216	660	1,381
250	90	222	414	700	1,078	585	1,224
300	89	201	378	634	976	530	1,109
350	82	185	345	584	898	488	1,020
400	76	172	321	543	836	454	949

To convert to Capacities at 15 PSIG Settings -- Multiply by 1.130
To convert to Capacities at 5 PSIG Settings -- Multiply by 0.879

Sizing Between Single or Second Stage Regulator and Appliance*
Maximum Propane Capacities Listed are Based on 1/2" W.C. Pressure Drop at 11" W.C. Setting. Capacities in 1,000 BTU/HR

PIPE OR TUBING LENGTH, FEET	TUBING SIZE, O.D., TYPE L					NOMINAL PIPE SIZE, SCHEDULE 40				
	3/8"	1/2"	5/8"	3/4"	7/8"	1/2"	3/4"	1"	1-1/4"	1-1/2"
10	49	110	206	348	539	291	608	1,146	2,353	3,525
20	34	76	141	239	368	200	418	788	1,617	2,423
30	27	61	114	192	296	161	336	632	1,299	1,946
40	23	52	97	164	253	137	284	541	1,111	1,665
50	20	46	86	146	224	122	255	480	985	1,476
60	19	42	78	132	203	110	231	436	892	1,337
80	16	36	67	113	174	94	198	372	764	1,144
100	14	32	59	100	154	84	175	330	677	1,014
125	12	28	52	89	137	74	155	292	600	899
150	11	26	48	80	124	67	141	265	544	815
200	10	22	41	69	106	58	120	227	465	697
250	9	19	36	61	94	51	107	201	412	618
300	8	18	33	55	85	46	97	182	374	560
350	7	16	30	51	78	43	89	167	344	515
400	7	15	28	47	73	40	83	156	320	479

*DATA IN ACCORDANCE WITH NFPA PAMPHLET NO. 54

Propane Gas Pipe Sizing

WARNING

TO AVOID PROPERTY DAMAGE OR SERIOUS PERSONAL INJURY DUE TO FIRE OR EXPLOSION CAUSED BY A PROPANE GAS LEAK, INSTALL A GAS DETECTING WARNING DEVICE. IF THE PROPANE GAS UNIT IS INSTALLED IN AN EXCAVATED AREA OR A CONFINED SPACE, A WARNING DEVICE IS REQUIRED DUE TO:

- **PROPANE GAS IS HEAVIER THAN AIR AND ANY LEAKING GAS CAN SETTLE IN ANY LOW AREAS OR CONFINED SPACES.**
- **PROPANE GAS ODORANT MAY FADE, MAKING THE GAS UNDETECTABLE EXCEPT WITH A WARNING DEVICE.**

ELECTRICAL WIRING

THERMOSTAT LOCATION

Mount the thermostat approximately five feet above the floor, in an area that has an inside, vibration-free wall and has good air circulation.

Movement of air must not be obstructed by furniture, door, draperies, etc. The thermostat must not be mounted where it will be affected by drafts, hot or cold water pipes or air ducts in walls, radiant heat from fireplace, lamps, the sun, television, etc. Consult the Instruction Sheet packaged with thermostat for mounting instructions.

All units have two stages of heating and two stages of mechanical cooling. Units which will have economizers may use thermostats with two or three stages of cooling. All units can use single stage or multi-stage thermostats. Refer to figures later in this section for wiring.

WARNING

TO AVOID PERSONAL INJURY, ELECTRICAL SHOCK OR DEATH, DISCONNECT ELECTRICAL POWER BEFORE SERVICING OR CHANGING ANY ELECTRICAL WIRING.

The units are designed for operation on 60 hertz current and at voltages as shown on the rating plate. All internal wiring in the unit is complete. It is necessary to bring in the power supply to the contactor as shown on the unit wiring diagram which is supplied with each unit. The low voltage wiring must be connected between the unit control panel and the room thermostat.

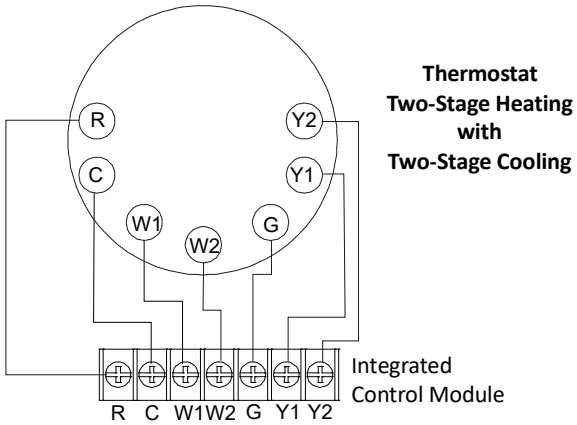

Two-Stage Heating with Two-Stage Cooling Thermostat Diagram

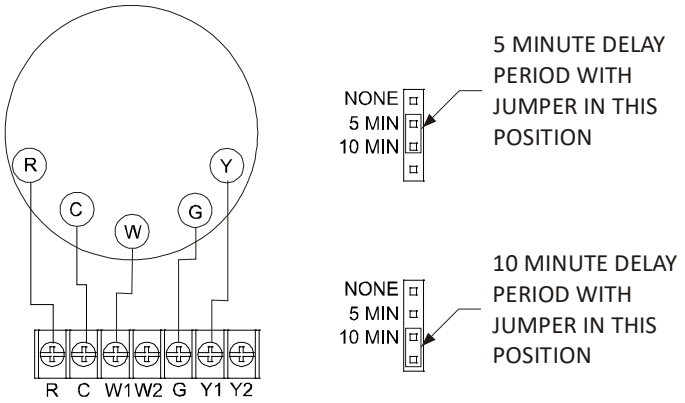

Two-Stage Heating (timed) and Two-Stage Cooling (timed) with Single Stage Thermostat Diagram

Single Stage Thermostat

To use a single stage thermostat, move jumper located to the left of the terminal strip labeled “Stage Delay” from NONE to “5” or “10” minutes. This selection will cause the control to run on low stage for the selected time (5 or 10 minutes) then shift to HIGH STAGE. This option controls both cooling and heating modes. If the jumper is not moved, only low-stage cool and low-stage heat will operate.

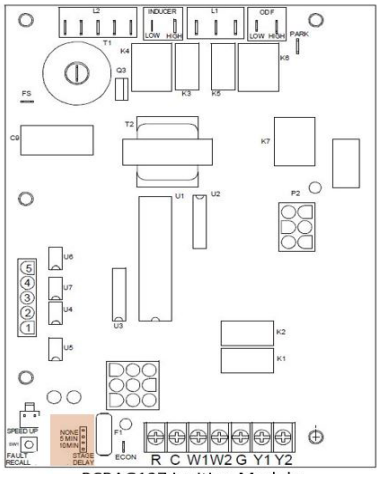

PCBAG127 (Stage Delay)

Alternate Fan Only Speed

The APGM5 models are equipped with ECM variable speed motors. Two FAN ONLY speeds are possible with these motors. To utilize the LOW HEAT blower speed for FAN ONLY operation, connect the wire from the thermostat’s G terminal to the ignition control board’s G terminal.

To utilize the alternate FAN ONLY speed, connect the wire from the thermostat’s G terminal to the unstripped green wire in the control box. (DO NOT connect the thermostat’s G terminal to the ignition control’s G terminal.) This alternate FAN ONLY blower speed is approximately 63% of the HIGH COOL speed.

24 Volt Dehumidistat Wiring

WARNING

High Voltage!
Disconnect ALL power before servicing or installing thus unit. Multiple power sources may be present. Failure to do so may cause property damage, personal injury, or death.

The optional usage of a dehumidistat allows the unit’s circulator blower to operate at a slightly lower speed (approximately 80% of desired cooling speed) during a combined thermostat call for cooling and dehumidistat call for dehumidification. This can be done through an independent dehumidistat. This lower blower speed enhances dehumidification of the conditioned air as it passes through the air conditioning coil. For proper function, a dehumidistat applied to this package unit must operate on 24 VAC and utilize a switch which opens on humidity rise. Refer to the unit wiring diagram for additional wiring details.

To install/connect a dehumidistat:

1. Turn OFF power to unit.
2. To enable the dehumidify function, locate the ECM blower motor interface module in the unit’s blower section. Locate the jumper label “HUM” on the interface module. Cut the jumper to enable dehumidification (see ECM Blower Motor Interface Module).
3. Secure the dehumidistat control wire (typically the white lead) to the gray, unstripped wire in the unit’s control box.
4. Secure the dehumidistat low voltage wire (typically the black lead) to the ignition control’s “R” terminal.
5. Secure the dehumidistat ground wire (typically the green lead) to the ground screw to the unit’s sheet metal control box. **(NOTE: Refer to specific Dehumidification Stat used for wiring details)**

   NOTE: Ground wire may not be present on all dehumidistats.
6. Turn ON power to unit.

Once the HUM jumper is cut at the ECM motor interface module, the dehumidify function is enabled during a combination call for cooling (T-Stat) and dehumidification (DEHUMStat).

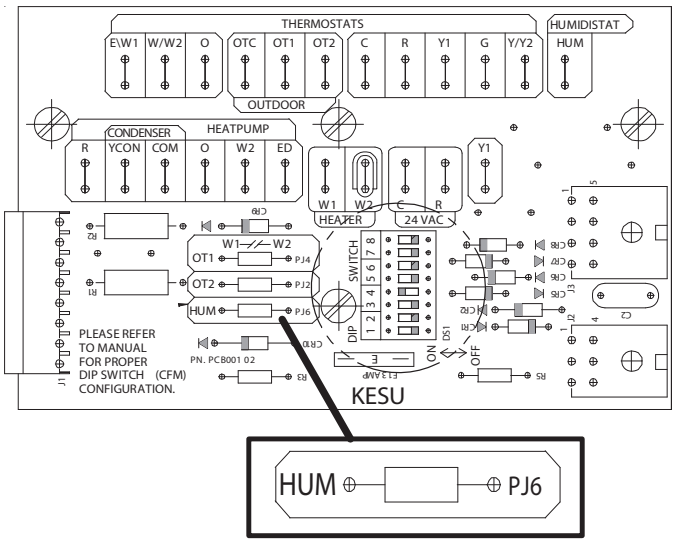

EMC Blower Motor Interface Module

Refer to the unit wiring diagram for electrical connections. When installed, the unit must be electrically grounded in accordance with local codes or in the absence of local codes, with the National Electrical Code, ANSI/NFPA No. 70, and/or the CSA C22.1 Electrical Code. Ensure low voltage connections are waterproof.

WARNING

To avoid the risk of electrical ground shock, wiring to the unit must be polarized and grounded.

CAUTION

To avoid property damage or personal injury due to fire, use only copper conductors.

WARNING

To prevent improper and dangerous operation due to wiring errors, label all wires prior to disconnection when servicing controls. Verify proper operation after servicing.

High Voltage Wiring

For unit protection, use a fuse or HACR circuit breaker that is in excess of the circuit ampacity, but less than or equal to the maximum overcurrent protection device. DO NOT EXCEED THE MAXIMUM OVERCURRENT DEVICE SIZE SHOWN ON UNIT DATA PLATE.

All line voltage connections must be made through weatherproof fittings. All exterior power supply and ground wiring must be in approved weatherproof conduit. Low voltage wiring from the unit control panel to the thermostat requires coded cable. See below for ground level and rooftop wiring.

DO NOT use gas piping, or conduit as an electrical ground.

A dedicated ground wire must be run from the unit to the electrical port.

Rated Voltage	Minimum Supply Voltage	Maximum Supply Voltage
208/230V	197	253

NOTE: Units are equipped with a single pole contactor. Caution must be exercised when servicing as only one leg of the power supply is broken with the contactor.

NOTE: The unit transformer is factory connected for 240V operation. If the unit is to operate on 208V, reconnect the transformer primary lead as shown on the unit wiring diagram.

The induced draft blower on some models is equipped with a low speed 240V lead (blue) and a low speed 208V lead (black). If the unit is to operate on 208V, connect the induced draft blower low speed 208V lead (black) in place of the low speed 240V lead (blue). Place the unused 240V lead on the “PARK” terminal located on ignition control.

Connect incoming power leads to terminals L1 & L2 on contactor in the electrical control section, using wire sizes specified in wiring table.

Branch Circuit Ampacity	15	20	25	30	35	40	45	50
SUPPLY WIRE LENGTH - FEET								
200	6	4	4	4	3	3	2	2
150	8	6	6	4	4	4	3	3
100	10	8	8	6	6	6	4	4
50	14	12	10	10	8	8	6	6

CIRCULATING AIR AND FILTERS

Airflow Conversion

Units can easily be converted from horizontal to down-discharge airflow delivery. In down-discharge or high static installations, the installer should measure the total external static and review the blower performance charts before performing the installation. In some installations it will be necessary to change the blower speed to provide proper air flow.

Horizontal Air Flow

Single phase models are shipped without horizontal duct covers. If needed, these kits may be ordered through Goodman’s Service Parts department.

Down Discharge Applications

Cut insulation around bottom openings and remove panels from the bottom of the unit, saving the screws holding the panels in place.

NOTE: Single phase models require installation of horizontal duct kit #20464501PDGK (medium chassis) and #20464502PDGK (large chassis). See “Unit Dimensions” section for chassis sizes.

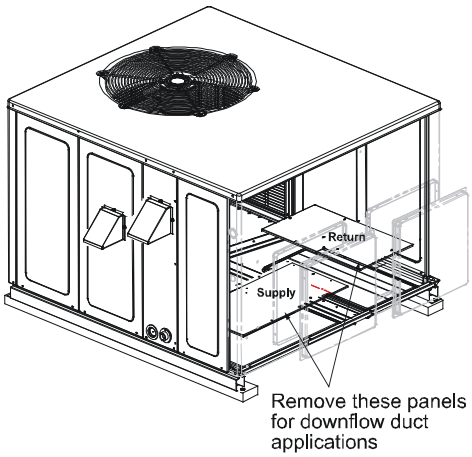

Duct Cover Installation

Ductwork

Duct systems and register sizes must be properly designed for the C.F.M. and external static pressure rating of the unit. Ductwork should be designed in accordance with the recommended methods of Air Conditioning Contractors of America Manual D (Residential) or Manual Q (Commercial). All ductwork exposed to the outdoors must include a weatherproof barrier and adequate insulation.

A duct system should be installed in accordance with Standards of the National Board of Fire Underwriters for the Installation of Air Conditioning, Warm Air Heating and Ventilating Systems. Pamphlets No. 90A and 90B.

The supply duct from the unit through a wall may be installed without clearance. However, minimum unit clearances as shown in the appendix must be maintained. The supply duct should be provided with an access panel large enough to inspect the air chamber downstream of the heat exchanger. A cover should be tightly attached to prevent air leaks.

For duct flange dimensions on the unit refer to the Unit Dimension illustration in the appendix.

For down-discharge applications, the ductwork should be attached to the roof curb prior to installing the unit. Ductwork dimensions are shown in the roof curb installation manual.

If desired, supply and return duct connections to the unit may be made with flexible connections to reduce possible unit operating sound transmission.

Filters

CAUTION

To prevent property damage due to fire and loss of equipment efficiency or equipment damage due to dust and lint build-up on internal parts, never operate the unit without an air filter installed in the return air system.

Even though a return air filter is not supplied with this unit, there must be a means of filtering all return air. All units may be externally filtered.

Refer to the unit recommended filter size chart for filter size information.

Filters installed external to the unit should be sized in accordance with their manufacturer recommendations. A throw-away filter must be sized for a maximum face velocity of 300 feet per minute.

Filter Installation

IMPORTANT NOTE: When installing a filter, the air flow arrows on the filter must point toward the circulator blower.

UNIT	2 TON	2 1/2 TON	3 TON	3 1/2 / 4 TON
Min.Filter Size	(1)20X20X1	(1)20X25X1	(1)25X25X1	(2)20X20X1

Recommended Filter Sizes

VENTING

NOTE: Venting is self-contained. Do not modify or block.

Installation - Flue Hood Exhaust

1. Locate the flue hood assembly box in the unit.
2. Slide screen over flanges on the lower flue hood.
3. Slide screen and lower flue hood into hood.
4. Using the three screws provided, attach the hood (with the opening facing down) over the flue exhaust opening in the utility panel.

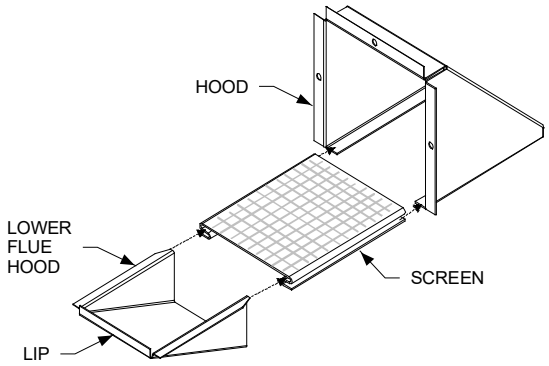

Installation - Combustion Air Intake Hood

1. Locate the second hood.
2. Using the three screws provided, attach the hood (with the opening facing down) to the heat exchanger access door.

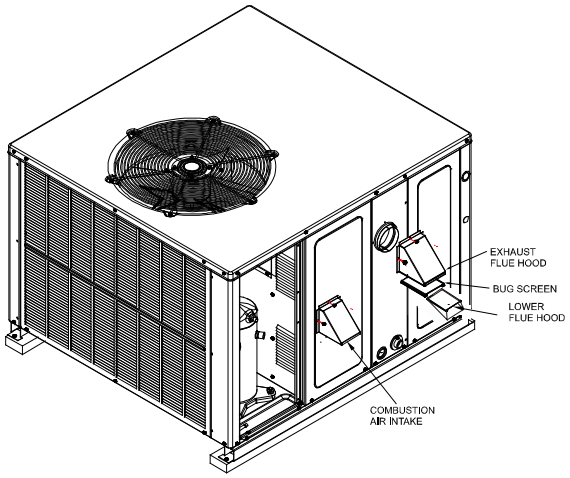

CONDENSATE DRAIN

Condensate Drain Connection

A 3/4” NPT drain connection is supplied for condensate piping. An external trap must be installed for proper condensate drainage.

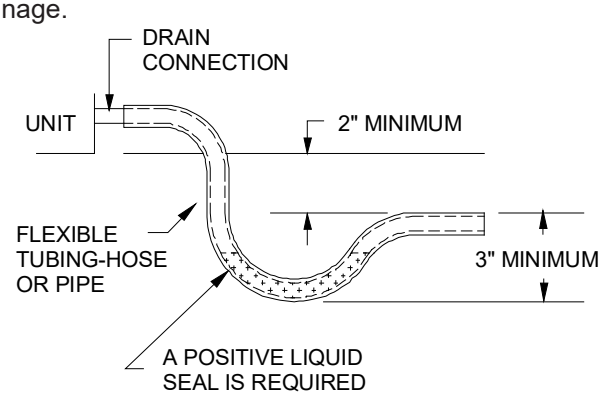

Drain Connection

NORMAL SEQUENCES OF OPERATION

Heating

This unit is equipped with an ignition control that automatically lights the main burner. DO NOT attempt to light the main burners by any other method.

1. Thermostat calls for low or high stage heating.
2. Induced draft blower energizes for 15-second pre-purge.
3. The spark igniter and low and high stage gas valve are energized for 7 seconds. **NOTE:** The igniter produces a very intense electrical spark that ignites the gas.
4. Main burners light and control detects presence of flame.
5. If the call is for low stage heat, the induced draft blower switches to low speed and the high stage gas valve closes 5 seconds after the main burners light. If call is for high stage heat, induced draft blower remains at high speed and high stage gas valve remains open.
   NOTE: If a single stage thermostat is used, the control will step to low stage after the main burners light and remain at low stage for 5 or 10 minutes, depending on jumper position. If the call for HEAT remains after the transition delay time expires, the control will transition from low stage to high stage.
6. The 30-second HEAT FAN ON delay time begins after the main burners light.
7. The unit delivers heat to the conditioned space until the thermostat is satisfied.
8. Gas valve(s) de-energizes. The induced draft blower continues operation for a 30-second post-purge.
9. Induced draft blower remains at low speed (or switches from high to low if operating at high stage heat) for the 30-second post purge.
10. Ignition control begins timing the HEAT FAN OFF delay. There is an adjustable HEAT FAN OFF delay of approximately 90/120/150/180 seconds (factory set at 150). If the unit is operating at high stage when the call for heat is removed, the blower will operate for 30 seconds at high heat speed then switch to low heat speed for the remainder of the selected HEAT FAN OFF delay.
    NOTE: After the HEAT FAN OFF delay time has elapsed, the blower will de-energize. This allows any additional heat in the heat exchanger to be transferred to the conditioned space.

Cooling

1. Thermostat calls for low or high stage cooling.
2. If the thermostat call is for low stage cooling, the compressor and outdoor fan are energized at low stage. If the thermostat call is for high stage cooling, the compressor and outdoor fan are energized at high stage.
3. The indoor blower will energize approximately 6 seconds later.
4. The unit delivers cooling to the conditioned space until the thermostat is satisfied.
5. The compressor and outdoor fan will be de-energized when the thermostat opens.
6. The indoor blower continues to run at low cool speed for approximately 60 seconds after the thermostat is satisfied. This allows additional cooling from the indoor coil to be transferred to the conditioned space. Then, the indoor blower is de-energized.

NOTE: A 180-second anti-short cycle is integral to the control and prevents recycling of the compressor.

Fan Only

1. Thermostat calls for FAN ONLY by energizing “G”.
2. The indoor blower is immediately energized at the low heat speed. If using the alternate FAN ONLY speed, the blower is immediately energized at approximately 63% of the HIGH COOL speed.
3. The indoor blower is immediately de-energized once thermostat call for FAN is removed.

STARTUP, ADJUSTMENTS, AND CHECKS

Heating Startup

This unit is equipped with an electronic ignition device to automatically light the main burners. It also has a power vent blower to exhaust combustion products.

On new installations, or if a major component has been replaced, the operation of the unit must be checked.

Check unit operation as outlined in the following instructions. If any sparking, odors, or unusual sounds are encountered, shut off electrical power and check for wiring errors, or obstructions in or near the blower motors. **Duct covers must be removed before operating unit.**

Rollout Protection Control

The rollout protection device opens, cutting power to the gas valve, if the flames from the burners are not properly drawn into the heat exchanger. The rollout protection device is located on the burner bracket. The reason for elevated temperatures at the control must be determined and repaired prior to resetting this manual reset control.

WARNING

TO AVOID PROPERTY DAMAGE, PERSONAL INJURY OR DEATH DUE TO FIRE OR EXPLOSION, A QUALIFIED SERVICER MUST INVESTIGATE THE REASON FOR THE ROLLOUT PROTECTION DEVICE TO OPEN BEFORE MANUALLY RESETTING THE ROLLOUT PROTECTION DEVICE.

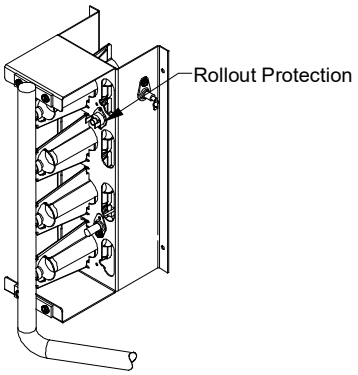

Rollout Protection on Burner Bracket

Secondary Limit Control

The secondary limit control is located on the top of the blower scroll assembly. This control opens when elevated temperatures are sensed. Elevated temperatures at the control are normally caused by blower failure. The reason for the opening should be determined and repaired prior to resetting.

If the power to the unit is interrupted during the heating cycle, it may cause the secondary limit to trip. Once the blower compartment temperature drops below the limit reset temperature, the limit will automatically reset.

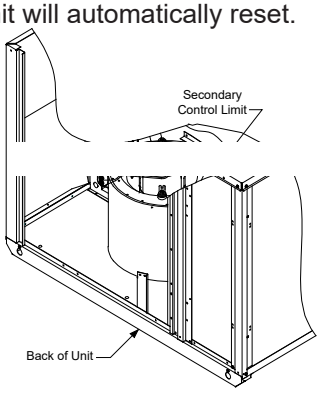

Secondary Control Limit

Pre-Operation Checks

1. Close the manual gas valve external to the unit.
2. Turn off the electrical power supply to the unit.
3. Set the room thermostat to its lowest possible setting.
4. Remove the heat exchanger door on the side of the unit by removing screws.
5. This unit is equipped with an ignition device which automatically lights the main burner. DO NOT try to light burner by any other method.
6. Move the gas control valve switch to the OFF position. Do not force.
7. Wait five minutes to clear out any gas.
8. Smell for gas, including near the ground. This is important because some types of gas are heavier than air. If you have waited five minutes and you do smell gas, immediately follow the warnings on page 3 of this manual. If having waited for five minutes and no gas smell is noted, move the gas control valve switch to the ON position.
9. Replace the heat exchanger door on the side of the unit.
10. Open the manual gas valve external to the unit.
11. Turn on the electrical power supply to the unit.
12. Set the thermostat to desired setting.

Gas Supply And Manifold Check

Gas supply pressure and manifold pressure with the burners operating must be as specified on the rating plate.

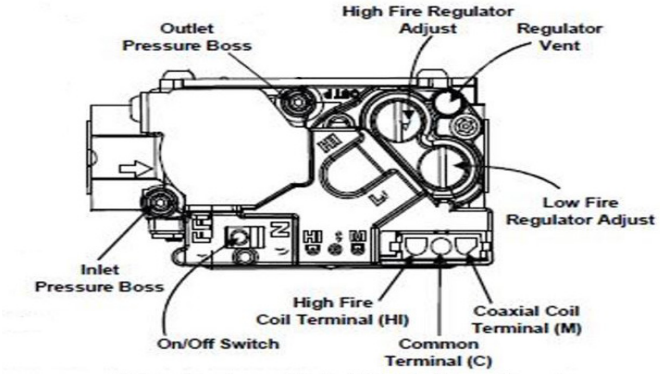

White-Rodgers Model 36G54 (Two Stage)

Gas Inlet Pressure Check

Gas inlet pressure must be checked and adjusted in accordance to the type of fuel being consumed.

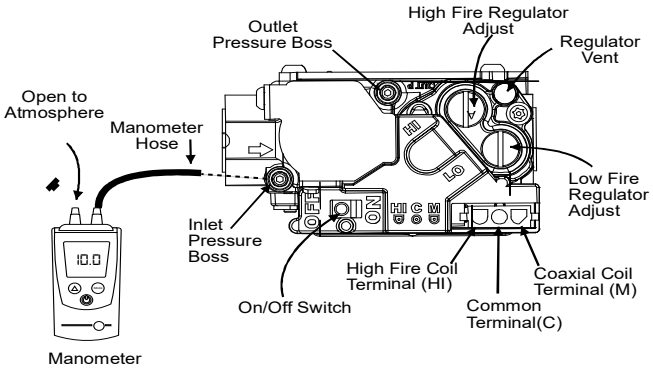

White-Rodgers Model 36G54 connected to Manometer

With Power And Gas Off:

NOTE: Use adapter kit #0151K00000S to measure gas pressure on White-Rodgers 36G54 gas valves.

1. Back inlet pressure test screw (inlet pressure boss) out one turn (counterclockwise, not more than one turn).
   Alternately, inlet gas pressure may be measured by removing the cap from the dripleg and installing a predrilled cap with a hose barb fitting.
2. Connect a water manometer or adequate gauge to the inlet pressure tap of the gas valve (or hose barb fitting on predrilled cap).

With Power And Gas On:

3. Put unit into heating cycle and turn on all other gas consuming appliances.

INLET GAS PRESSURE	
Natural	Min. 5.0" W.C., Max. 10.0" W.C.
Propane	Min. 11.0" W.C., Max. 13.0" W.C.

NOTE: Inlet gas pressure be within the minimum and maximum value shown in the Inlet Gas Pressure Chart.

If operating pressures differ from above, make necessary pressure regulator adjustments, check piping size, etc., and/or consult with local utility.

4. Turn off all electrical power and gas supply to the system.
5. Remove manometer hose from the outlet pressure boss (or remove hose from hose barb).
6. Turn inlet pressure test screw in to seal pressure port (clockwise, 7 in-lb minimum).
   Alternately, remove predrilled cap from dripleg. Reinstall original cap, sealing with pipe thread compound.
7. Turn on electrical power and gas supply to the system.
8. Turn on system power and energize valve.
9. Using a leak detection solution or soap suds, check for leaks at the pressure boss screw (or dripleg cap). Bubbles forming indicate a leak. SHUT OFF GAS AND FIX ALL LEAKS IMMEDIATELY.

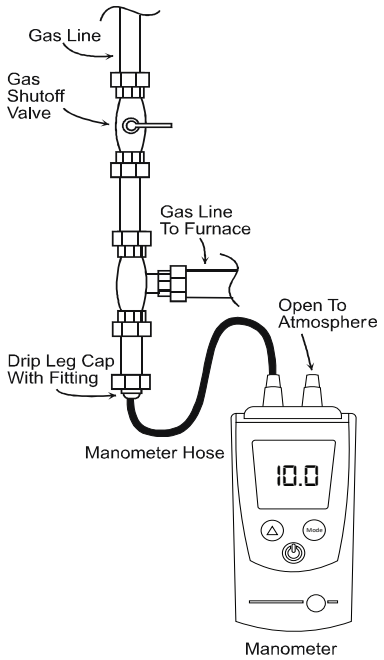

Measuring Inlet Gas Pressure - Alternate Method

Manifold Pressure Check

1 Turn OFF gas to furnace at the manual gas shutoff valve external to the furnace.
2. Turn off all electrical power to the system.
3. Back outlet pressure test screw (outlet pressure boss) out one turn (counterclockwise, not more than one turn).
4. Attach a hose and manometer to the outlet pressure boss of the valve.
5. Turn ON the gas supply.
6. Turn on power and energize main (M) solenoid. Do not energize the HI solenoid.
7. Measure gas manifold pressure with burners firing. Adjust manifold pressure using the Manifold Gas Pressure table.

Manifold Gas Pressure			
Gas		Range	Nominal
Natural	Low Stage	1.7 - 2.3" w.c.	2.0" w.c.
	High Stage	3.2 - 3.8" w.c.	3.5" w.c.
Propane	Low Stage	5.7 - 6.3" w.c.	6.0" w.c.
	High Stage	9.7 - 10.3" w.c.	10.0" w.c.

Manifold Gas Pressure

8. Remove regulator cover screw from the low (LO) outlet pressure regulator adjust tower and turn screw clockwise to increase pressure, or counterclockwise to decrease pressure.
9. Energize main (M) solenoid as well as the HI terminal.
10. Remove regulator cover screw from the HI outlet pressure regulator adjust tower and turn screw clockwise to increase pressure, or counterclockwise to decrease pressure.
11. Turn off all electrical power and gas supply to the system.
12. Remove manometer hose from outlet pressure boss.

13. Turn outlet pressure test screw in to seal pressure port (clockwise, 7 in-lb minimum).
14. Turn on electrical power and gas supply to the system.
15. Turn on system power and energize valve.
16. Using a leak detection solution or soap suds, check for leaks at pressure boss screw. Bubbles forming indicate a leak. SHUT OFF GAS AND FIX ALL LEAKS IMMEDIATELY.

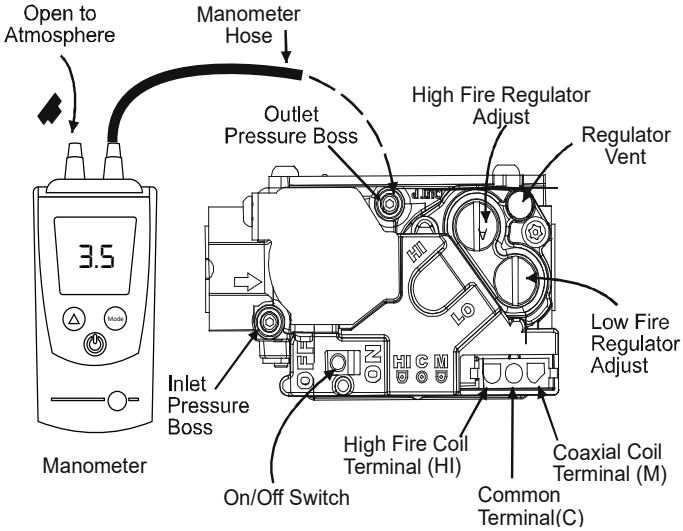

White-Rodgers Model 36G54 connected to Manometer

NOTE: For Natural gas to LP gas conversion, Conversion Kit "LPM-08" must be used. Consult your dealer for appropriate conversion kit(s)

Gas BTU Input Check (Natural Gas Only)

To measure the gas input use a gas meter and proceed as follows:

1. Turn off gas supply to all other appliances except the unit.
2. With the unit operating, time the smallest dial on the meter for one complete revolution. If this is a 2 cubic foot dial, divide the seconds by 2; if it is a 1 cubic foot dial, use the seconds as is. This gives the seconds per cubic foot of gas being delivered to the unit.
3. INPUT=GAS HTG VALUE x 3600 / SEC. PER CUBIC FOOT

Example: Natural gas with a heating value of 1000 BTU per cubic foot and 36 seconds per cubic foot as determined by Step 2, then:

Input = 1000 x 3600 / 36 = 100,000 BTU per Hour.
NOTE: BTU content of the gas should be obtained from the gas supplier. This measured input must not be greater than shown on the unit rating plate.

4. Relight all other appliances turned off in step 1. Be sure all pilot burners are operating.

Main Burner Flame Check

Flames should be stable, soft and blue (dust may cause orange tips but they must not be yellow) and extending directly outward from the burner without curling, floating or lifting off.

Temperature Rise Check

Check the temperature rise through the unit by placing thermometers in supply and return air registers as close to the unit as possible. Thermometers must not be able to sample temperature directly from the unit heat exchangers, or false readings could be obtained.

1. All registers must be open; all duct dampers must be in their final (fully or partially open) position and the unit operated for 15 minutes before taking readings.
2. The temperature rise must be within the range specified on the rating plate.

NOTE: Air temperature rise is the temperature difference between supply and return air.

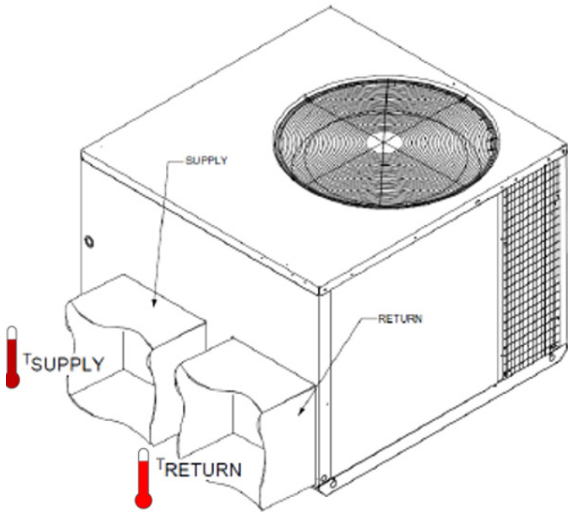

Checking Temperature Rise

With a properly designed system, the proper amount of temperature rise will normally be obtained when the unit is operated at rated input with the recommended blower speed.

If the correct amount of temperature rise is not obtained, it may be necessary to change the blower speed. A higher blower speed will lower the temperature rise. A slower blower speed will increase the temperature rise.

NOTE: Blower speed MUST be set to give the correct air temperature rise through the unit as marked on the rating plate.

External Static Pressure Testing

The total external static pressure must be checked on this unit to determine if the airflow is proper.

1. Using a digital manometer measure the static pressure of the return duct at the inlet of the unit, (Negative Pressure).

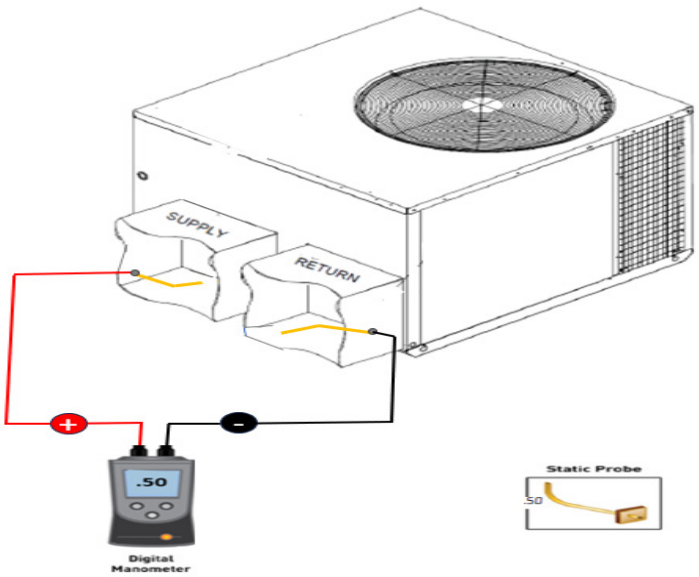

Total External Static

2. Measure the Static pressure of the supply duct, (Positive Pressure).
3. Add the two readings together.
   NOTE: Both readings may be taken simultaneously and read directly on the manometer if so desired.
4. Consult proper table for quantity of air.

If the external static pressure exceeds the minimum or maximum allowable statics, check for closed dampers, dirty filters, undersized or poorly laid out ductwork.

Refer to airflow table provided in the Appendix for details.

Blower Speed Adjustments

WARNING

TO AVOID PERSONAL INJURY OR DEATH DUE TO ELECTRIC SHOCK, REMOVE ELECTRICAL POWER FROM THE UNIT BEFORE CHANGING SPEED TAPS ON THE BLOWER MOTOR.

The APGM5 models are equipped with ECM circulating blower motors. ECM circulating blower motors are constant airflow motors with very low power consumption. The ECM motor is controlled by 24VAC signals passed from an ECM interface module.

The ignition control board has four blower speed outputs: LOW HEAT, HI HEAT, LOW COOL and HIGH COOL. These are 24VAC outputs and are passed to the ECM interface module. Depending on applied thermostat inputs, the ignition control will energize the appropriate blower speed output with 24VAC. This signal is passed to the ECM interface module, which in turn passes the signal to the ECM motor. The ECM motor then operates at the correct speed, delivering the appropriate airflow.

NOTE: The FAN ONLY blower speed is the same as the LOW HEAT speed unless the Alternate FAN ONLY speed is used (see “Alternate FAN ONLY Speed” section).

The blower speed as shipped from the factory should deliver the correct airflow. However, if installation conditions require a different airflow, the blower speed may be adjusted using the DIP switches on the ECM interface module (located in the blower compartment. Use the following figure and the airflow tables in the *Appendix* to set the desired blower speed.

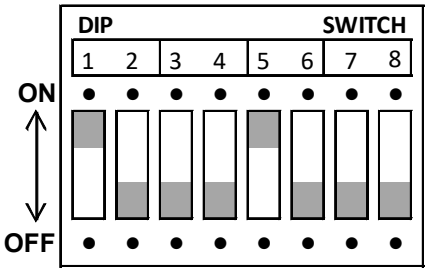

Factory Dipswitch Settings

Switches	Function
1, 2	Heating Speeds
3	Unused
4	OFF for Two-Stage
5, 6	Cooling Speeds
7, 8	Airflow Adjust

DIP Switch Functions

NOTE: Heating airflow must be adjusted to provide the temperature rise shown on rating plate. Blower speeds are programmed to deliver adequate airflow at rated external static pressure (ESP). Refer to airflow table provided in the *Appendix* for details.

Limit Check

Check limit control operation after 15 minutes of operation by blocking the return air grille(s).

1. After several minutes the main burners must go OFF. Blower will continue to run.
2. Remove air restrictions and main burners will relight after a cool down period of a few minutes.

Adjust the thermostat setting below room temperature.

1. Main burners must go OFF.
2. Circulating Air Blower will continue to run for 90, 120, 150 or 180 seconds, depending on the setting.

NOTE: If necessary, adjust fan OFF delay settings to obtain satisfactory comfort level.

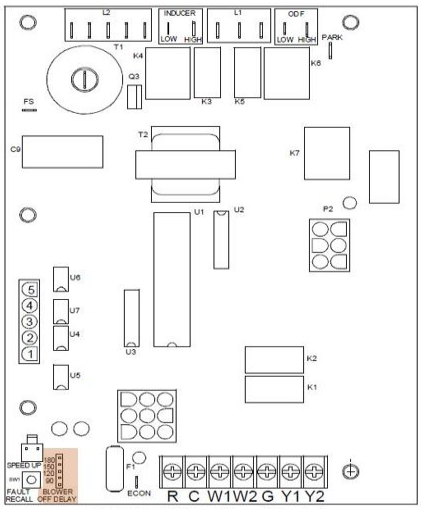

PCBAG127 Ignition Module

WARNING

This unit must not be used as a "construction heater" during the finishing phases of construction on a new structure. This type of use may result in premature failure of the unit due to extremely low return air temperatures and exposure to corrosive or very dirty atmosphere.

Unit Shutdown

1. Set the thermostat to lowest setting.
2. Turn off the electrical power supply to the unit.
3. Remove the heat exchanger door on the side of the unit by removing screws.
4. Move the gas control valve switch to the OFF position. Do not force.
5. Close manual gas shutoff valve external to the unit.
6. Replace the heat exchanger door on the unit.
7. If cooling and/or air circulation will be desired, turn ON the electrical power.

Cooling Startup

NOTE: The outdoor temperature must be 60°F or higher before making adjustments to charge.

Compressor Protection Devices

The compressor includes components which are designed to protect the compressor against abnormal operating conditions.

WARNING

To prevent personal injury or death, always disconnect electrical power before inspecting or servicing the unit. NOTE: All compressor protection devices reset automatically, energizing the contactor and outdoor fan.

Cooling Refrigerant Charging

Check unit charge before putting the cooling section into full operation. The unit has a thermostatic expansion valve metering device. To ensure the unit is properly charged for the intended application, check the unit refrigerant sub-cooling at the condenser. The refrigerant sub-cooling is a function of outdoor ambient temperature and return air temperature of the conditioned space. It is the installing contractors responsibility to ensure the proper refrigerant sub-cooling at the condenser is adjusted for each application. As the outdoor ambient temperature rises the sub-cooling decreases and as the outdoor ambient temperature lowers, the sub-cooling increases.

Checking Subcooling

NOTE: Units with a TXV should be charged to Subcooling only.

SUBCOOLING FORMULA = SATURATED LIQUID LINE TEMPERATURE - LIQUID LINE TEMPERATURE

EXAMPLE:

a. Liquid Line Pressure = 417 PSI
b. Corresponding Temp. = 120°F
c. Thermometer on Liquid line = 109°F.

To obtain the amount of subcooling, subtract 109°F from 120°F. The difference is 11° subcooling. See the specification sheet or technical information manual for the design subcooling range for your unit.

Checking Superheat

EXAMPLE:

a. Suction Pressure = 143 PSI
b. Corresponding Temp. = 50°F
c. Thermometer on Suction Line = 59°F

To obtain the degrees temperature of superheat, subtract 50.0 from 59.0°F. The difference is 9° Superheat. The 9° Superheat would fall in the ± range of allowable superheat.

SUPERHEAT = SUCTION LINE TEMP - SAT. SUCTION TEMP.

Superheat Adjustment

NOTE: Superheat adjustments should not be made until indoor ambient conditions have stabilized. This could take up to 24 hours depending on indoor temperature and humidity. Before checking superheat run the unit in cooling for 10-15 minutes or until refrigerant pressues stabilize. Use the following guidelines and methods to check unit operation and ensure that the refrigerant charge is within limits.

For TXV systems, to adjust superheat, unscrew the cover from the expansion valve, locate the adjustment screw, and turn it clockwise (in) to increase superheat or counterclockwise (out) to decrease superheat. It is recommended to make small adjustments at a time, 1/8-1/4 turn increments. Replace adjustment cap. Wait a minimum of 10 minutes between adjustments to allow time for the TXV and pressures to stabilize.

Refrigerant Charge Check

NOTE: For optimal performance, follow charging instructions below.

(Units with Fixed Orifice Devices)

All package units with fixed orifice devices are charged using the superheat method at the compressor suction line. To increase super heat, remove charge and to decrease super heat, add charge. After superheat is adjusted, it is recommended to check unit subcooling at the condenser coil liquid line. See Design Superheat and Subcooling table for targets on each model.

(Units with Expansion valve (TXV))

Single Stage Cooling Application: Refer to the Design Superheat & Subcooling table

Two-Stage Cooling Application: Run unit on Low Stage cooling and refer to Design Superheat & Subcooling table.

1. Purge gauge lines. Connect service guage manifold to access fittings. Run system at least 10 minuets to allow pressure to stabilize.
2. Temporarily install thermometer on liquid (small) line near liquid line access fitting with adequate contact and insulate for best possible reading.
3. Check subcooling and superheat. System should have a subcooling and superheat within the range listed on the Design Superheat and Subcooling table.
   a. If subcooling and superheat are low, adjust TXV superheat, then check subcooling.
      NOTE: To adjust superheat, turn the valve stem clockwise to increase and counterclockwise to decrease.
   b. If subcooling is low and superheat is high, add charge to raise subcooling then check superheat.
   c. If subcooling and superheat are high, adjust TXV valve superheat, then check subcooling.
   d. If subcooling is high and superheat is low, adjust TXV valve superheat and remove charge to lower the subcooling.
   NOTE: Do NOT adjust the charge based on suction pressure unless there is a gross undercharge.
4. Disconnect manifold set, installation is complete.

Design Superheat & Subcool					
Model	Superheat ±2°F	Subcooling ±1°F	Expansion Device	Cooling Stage	Outdoor Ambient (°F)
APGM524***41	8	5	TXV	low	82
APGM530***41	13	9	TXV	low	82
APGM536***41	8	10	TXV	low	82
APGM542***41	9	7	TXV	low	82
APGM548***41	9	7	TXV	low	82

Cooling Operation

NOTE: Mechanical cooling cannot be reliably provided at ambient temperatures below 50° F.

1. Turn on the electrical power supply to the unit.
2. Place the room thermostat selector switch in the COOL position (or AUTO if available, and if automatic changeover from cooling to heating is desired).
3. Set the room thermostat to the desired temperature.

TROUBLESHOOTING

Ignition Control Error Codes

The following presents probable causes of questionable unit operation. Refer to *Diagnostic Indicator Chart* for an interpretation of the signal and to this section for an explanation.

Remove the control box access panel and note the number of diagnostic LED flashes. Refer to *Diagnostic Indicator Chart* for an interpretation of the signal and to this section for an explanation.

Fault Recall

The ignition control is equipped with a momentary push-button switch that can be used to display on the diagnostic LED the last five faults detected by the control. The control must be in Standby Mode (no thermostat inputs) to use the feature. Depress the push-button switch for approximately 2 seconds. **NOTE: Do not hold for longer than 4 seconds. Holding the button for 4 seconds or higher will erase the memory!** Release the switch when the LED is turned off. The diagnostic LED will then display the flash codes associated with the last five detected faults. The order of display is the most recent fault to the least recent fault.

Abnormal Operation - Heating

Internal Control Failure

If the integrated ignition control in this unit encounters an internal fault, it will go into a “hard” lockout and turn off the diagnostic LED. If diagnostic LED indicates an internal fault, check power supply to unit for proper voltage, check all fuses, circuit breakers and wiring. Disconnect electric power for five seconds. If LED remains off after restoring power, replace control.

External Lockout

An external lockout occurs if the integrated ignition control determines that a measurable combustion cannot be established within three (3) consecutive ignition attempts. If flame is not established within the seven (7) second trial for ignition, the gas valve is de-energized, 30 second inter-purge cycle is completed, and ignition is re-attempted. The control will repeat this routine three times if a measurable combustion is not established. The control will then shut off the induced draft blower and go into a lockout state.

If flame is established but lost, the control will energize the circulator blower at the heat speed and then begin a new ignition sequence. If flame is established then lost on subsequent attempts, the control will recycle the ignition sequence.

The diagnostic fault code is 1 flash for a lockout due to failed ignition attempts. The integrated control will automatically reset after one hour, or it can be reset by removing the thermostat signal or disconnecting the electrical power supply for over five seconds. If the diagnostic red LED indicates an external lockout, perform the following checks:

- *Check the supply and manifold pressures*
- *Check the gas orifices for debris*
- *Check gas valve for proper operation*
- *Check flame sensor*
  A drop in flame signal can be caused by nearly invisible coating on the sensor. Remove the sensor and carefully clean with steel wool.
- *Auxiliary/Secondary Limit*
  A dirty filter, excessive duct static, insufficient air flow, a faulty limit, or a failed circulator blower can cause this limit to open. Check filters, total external duct static, circulator blower motor, blower motor speed tap (see wiring diagram), and limit. An interruption in electrical power during a heating cycle may also cause the auxiliary limit to open. The automatic reset secondary limit is located on top of the circulator blower assembly.
- *Rollout Limit*
  If the burner flames are not properly drawn into the heat exchanger, the flame rollout protection device will open. Possible causes are restricted or blocked flue passages, blocked or cracked heat exchanger, a failed induced draft blower, or insufficient combustion air. The rollout protection device is a manual reset limit located on the burner bracket. The cause of the flame rollout must be determined and corrected before resetting the limit.
- *Check wiring*
  Check wiring for opens/shorts and miswiring.

IMPORTANT NOTE: If you have to frequently reset your gas/electric package unit, it means that a problem exists that should be corrected. Contact a qualified servicer for further information.

Pressure Switch Stuck Open

A pressure switch stuck open can be caused by a faulty pressure switch, faulty wiring, a disconnected or damaged hose, a blocked or restricted flue, a blocked pressure tap or a faulty induced draft blower.

If the control senses an open pressure switch during the pre-purge cycle, the induced draft blower only will be energized. If the pressure switch opens after ignition has begun the gas valve is de-energized, the circulator blower heat off cycle begins, and the induced draft blower remains on. The diagnostic LED (red) code is two (2) flashes.

Pressure Switch Stuck Closed

A stuck closed pressure switch can be caused by a faulty pressure switch or faulty wiring. If the control encounters a pressure switch stuck closed, the induced draft blower remains off. The diagnostic red LED code for this fault is three (3) flashes.

Primary Limit

A primary limit will open due to excessive supply air temperatures. This can be caused by a dirty filter, excessive duct static, insufficient air flow, or a faulty limit. Check filters, total external duct static, blower motor, blower motor speed tap (see wiring diagram), and limit. This limit will automatically reset once the temperature falls below a preset level.

If a limit switch opens, the gas valve is immediately de-energized, the induced draft and air circulating blowers are energized. The induced draft and air circulator blowers remain energized until the limit switch re-closes. The diagnostic LED (red) code for an open limit is four (4) flashes.

NOTE: If the primary limit opens five (5) times within the same call for heat, the ignition control will lock out for one (1) hour with the air circulating blower energized at high heat speed. The diagnostic LED (red) code for this condition is seven (7) flashes.

Flame Detected with Gas Valve Closed

If flame is detected with the gas valve de-energized, the combustion and air circulator blowers are energized. The diagnostic fault code is five (5) flashes (red LED) for this condition. The flame diagnostic LED (amber) will flash (2) times to indicate this condition. The control can be reset by removing the power supply to the unit or it will automatically reset after one hour. Miswiring is the probable cause for this fault.

Low Flame Signal

Under some conditions, the fuel or air supply can create a nearly invisible coating on the flame sensor. This coating acts as an insulator causing a drop in the flame signal. If the flame signal drops below a predetermined value, the ignition control will display an error code of (1) flash on the amber diagnostic LED. The unit will continue to operate until the control can no longer detect flame.

Abnormal Operation - Cooling

Short Cycle Compressor Delay

The automatic ignition control has a built-in feature that prevents damage to the compressor in short cycling situations. In the event of intermittent power losses or intermittent thermostat operation, the ignition control will delay output to the compressor contactor for three minutes from the time power is restored or thermostat call for cooling is restored. (Compressor is off a total of three minutes). The diagnostic red LED will flash six (6) times to indicate the compressor contactor output is being delayed.

NOTE: Some electronic thermostats also have a built-in compressor short cycle timer that may be longer than the three minute delay given above. If you are using an electronic thermostat and the compressor has not started after three minutes, wait an additional five minutes to allow the thermostat to complete its short cycle delay time.

High Pressure Switch/Loss of Charge Switch

Some models include a high pressure cutout switch and/or a loss of charge cutout switch. The high pressure cutout switch protects the refrigeration system from excessive operating pressures. The loss of charge cutout switch protects the refrigeration system from very low operating pressures due to a loss of refrigerant. Compressor operation will be disabled if either of these devices opens. If either devices opens, the diagnostic red LED will flash (9) times to indicate that a refrigeration system pressure switch is open.

MAINTENANCE

WARNING

High Voltage!
Disconnect ALL power before servicing or installing thus unit. Multiple power sources may be present. Failure to do so may cause property damage, personal injury, or death.

Have the gas heating section of the unit checked at least once a year before the heating season begins, to be sure that the combustion air inlet and flue outlet hoods are not blocked by debris, which would prevent adequate combustion air and a properly operating vent system.

Filter Replacement or Cleaning

A return air filter is not supplied with this unit; however, there must be a means of filtering all of the return air. The filter(s) may be located in the return air duct(s), or return air filter grille(s). Consult with your installing dealer for the actual location of the return air filter(s) for your unit.

Dirty filters are the most common cause of inadequate heating or cooling performance. Filter inspection should be made at least every two months; more often if necessary because of local conditions and usage.

Dirty throwaway filters should be discarded and replaced with a new, clean filter. Dirty permanent filters should be washed with water, thoroughly dried and sprayed with a filter adhesive before being reinstalled. (Filter adhesives may be found at many hardware stores.) Permanent filters should last several years. However, should one become torn or uncleanable, it should be replaced.

Cabinet Finish Maintenance

Use a fine grade automotive wax on the cabinet finish to maintain the finish's original high luster. This is especially important in installations with extended periods of direct sunlight.

Clean Outside Coil (Qualified Servicer Only)

The coil with the outside air flowing over it should be inspected annually and cleaned as frequently as necessary to keep the finned areas free of lint, hair and debris.

Condenser, Evaporator, and Induced Draft Motors

Bearings on the air circulating blower motor, condenser motor and the combustion fan motor are permanently lubricated. No additional oiling is required.

Flame Sensor (Qualified Servicer Only)

A drop in the flame current can be caused by a nearly invisible coating on the flame sensor. This coating, created by the fuel or combustion air supply, can be removed by carefully cleaning the flame sensor with steel wool.

NOTE: After cleaning, the microamp signal should be stable and in the range of 4 - 6 microamps DC.

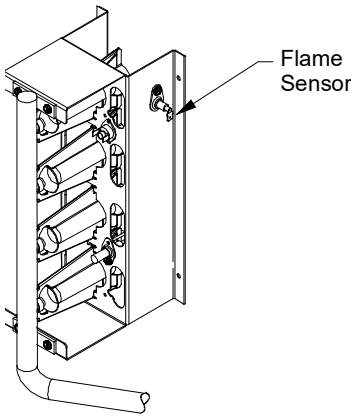

Flame Sensor

Flue Passages (Qualified Servicer Only)

At the start of each heating season, inspect and, if necessary, clean the unit flue passage.

Cleaning Flue Passages (Qualified Servicer Only)

1. Shut off electric power and gas supply to the unit.
2. Remove burner assembly by disconnecting the gas line and removing the manifold bracket from the partition panel.
3. Remove the flue from the induced draft blower and the collector box cover from the partition panel.
4. The primary heat exchanger tubes can be cleaned using a round wire brush attached to a length of high grade stainless steel cable, such as drain cleanout cable. Attach a variable speed reversible drill to the other end of the spring cable. Slowly rotate the cable with the drill and insert it into one of the primary heat exchanger tubes. While reversing the drill, work the cable in and out several times to obtain sufficient cleaning. Use a large cable for the large tube, and then repeat the operation with a small cable for the smaller tube. Repeat for each tube.
5. When all heat exchanger tubes have been cleaned, replace the parts in the reverse order in which they were removed.
6. To reduce the chances of repeated fouling of the heat exchanger, perform the steps listed in "Startup, Adjustments, and Checks".

Main Burner Flame (Qualified Servicer Only)

Flames should be stable, soft and blue (dust may cause orange tips but must not be yellow). The flames must extend directly outward from the burner without curling, floating or lifting off.

At least once a year, prior to or during the heating season, make a visual check of the burner flames.

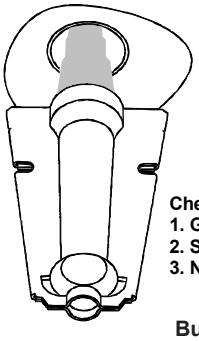

Check the burner flames for:
1. Good adjustment
2. Stable, soft and blue
3. Not curling, floating, or lifting off.

Burner Flame

WARNING

TO AVOID PERSONAL INJURY OR DEATH DUE TO ELECTRIC SHOCK, DO NOT REMOVE ANY INTERNAL COMPARTMENT COVERS OR ATTEMPT ANY ADJUSTMENT. CONTACT A QUALIFIED SERVICER AT ONCE IF AN ABNORMAL FLAME SHOULD DEVELOP.

NOTE: This will involve removing and reinstalling the heat exchanger door on the unit, which is held by two screws. If you are uncertain about your ability to do this, contact a qualified servicer.

If a strong wind is blowing, it may alter the airflow pattern within the unit enough that an inspection of the burner flames is not possible.

Cleaning Burners

1. Shut off electric power and gas supply to the unit.
2. Remove the screws securing the manifold to the burner retention bracket. Remove the manifold and rotate each burner counterclockwise to remove.
3. Remove the burners.

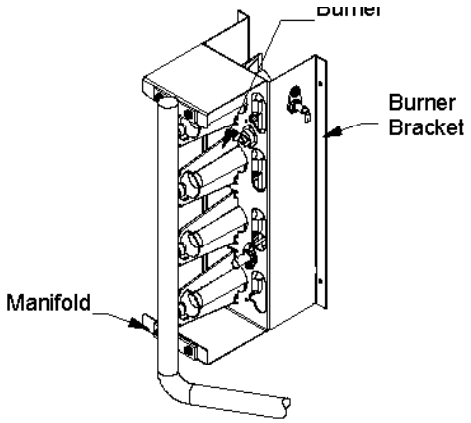

Manifold Assembly

4. Use a bottle brush to clean burner insert and inside of the burners.
5. Replace burners and manifold, inspect the burner assembly for proper seating of burners in retention slots.
6. Reconnect electrical power and gas supply.

For further information on the yearly inspection, consult the User Manual. It is recommended that a qualified servicer inspect and service the unit at least once each year.

Turn the unit on at the thermostat. Wait a few minutes, since any dislodged dust will alter the normal flame appearance. Flames should be predominantly blue and directed into the tubes. They should not be yellow. They should extend directly outward from the burner ports without curling downward, floating or lifting off the ports.

ACCESSORIES AND FUNCTIONAL PARTS

Sheet Metal Accessories

Additional accessories can be purchased to fit specific application needs. Parts and instructions are available from your distributor.

Functional Parts

CAUTION

LABEL ALL WIRES PRIOR TO DISCONNECTION WHEN SERVICING CONTROLS. WIRING ERRORS CAN CAUSE IMPROPER AND DANGEROUS OPERATION.

CAUTION

ALWAYS VERIFY PROPER OPERATION AFTER SERVICING.

FUNCTIONAL PARTS	
Auxiliary Limit Switch	Flame Rollout Switch
Blower Housing	Flame Sensor
Blower Wheel	Gas Orifice
Circulator Blower Motor	Gas Valve
Burner	Heat Exchanger
Capacitor	High Limit Switch
Compressor	High Pressure Switch
Condenser Coil	Igniter
Condenser Fan Blade	Ignition Control
Condenser Fan Motor	Induced Draft Blower
Contactor	Pressure Switch
Gas Manifold	Pressure Switch Hose
ECM Interface Module	Thermostatic Expansion Valve
Evaporator Coil	Transformer

Functional Parts List

General Information

1. Refer to the description in Functional Parts List when ordering any of the listed functional parts. Be sure to provide the unit model and serial numbers with the order.
2. Although only functional parts are shown, all sheet metal parts, doors, etc. may be ordered by description.
3. Parts are available from your distributor.

APPENDIX

IGNITION CONTROL DIAGNOSTIC INDICATOR CHART

Red Light Signal	Refer to Abnormal Heating or Cooling Operation Sections of this Manual
Off	Internal Control Failure
1 Flash	External Lockout
2 Flashes	Pressure Switch Stuck Open
3 Flashes	Pressure Switch Stuck Closed
4 Flashes	Thermal Protection Device Open
5 Flashes	Flame Detected with Gas Valve Closed
6 Flashes	Short Cycle Compressor Delay (Cooling Only)

Amber Light Signal	Refer to Abnormal Heating or Cooling Operation Sections of this Manual
Off	No Flame Present
On	Normal Flame
1 Flash	Low Flame Current
2 Flashes	Flame Detected with Gas Valve De-energized.

HEATING TIMING CHART

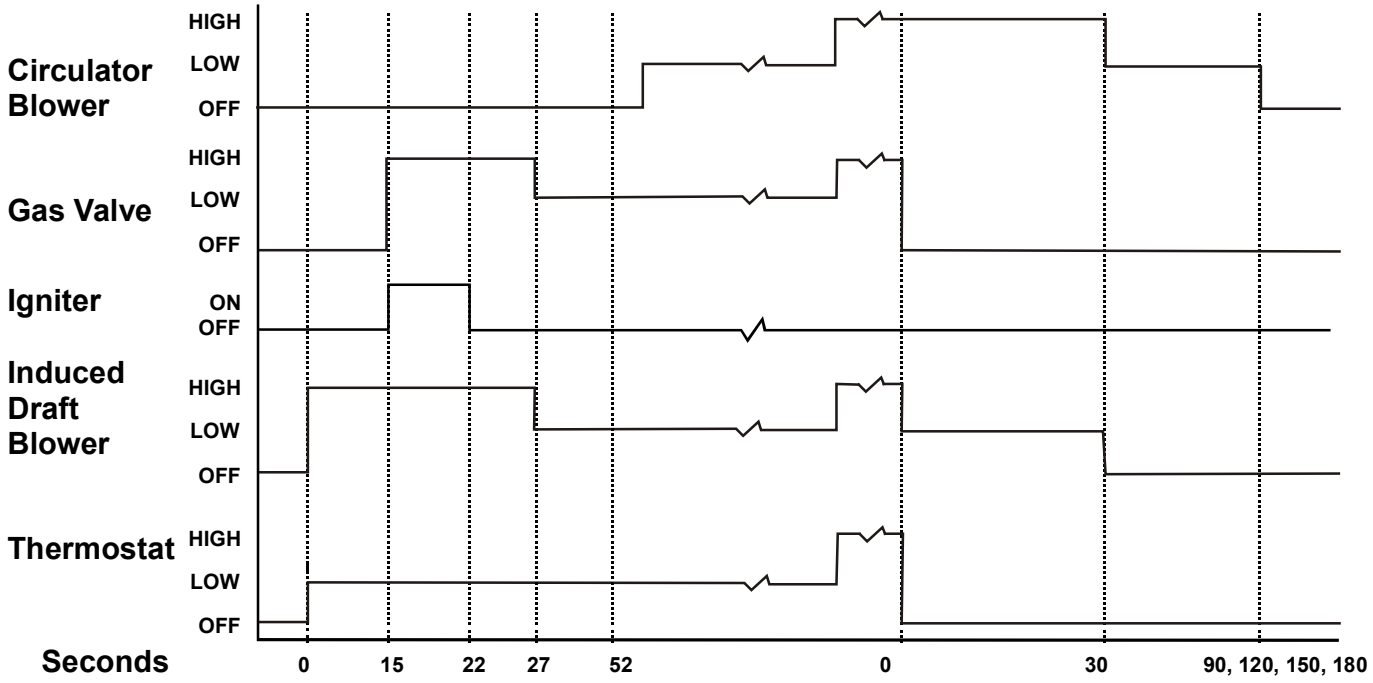

COOLING TIMING CHART

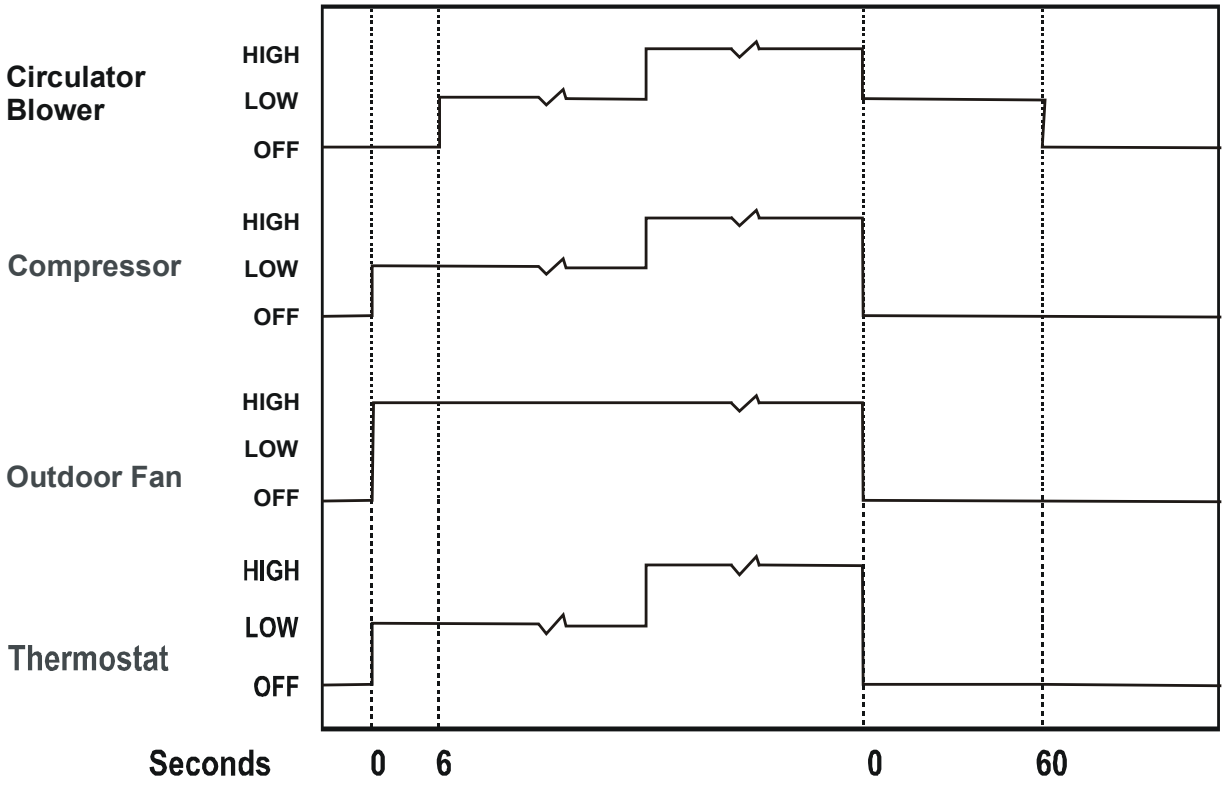

UNIT DIMENSIONS

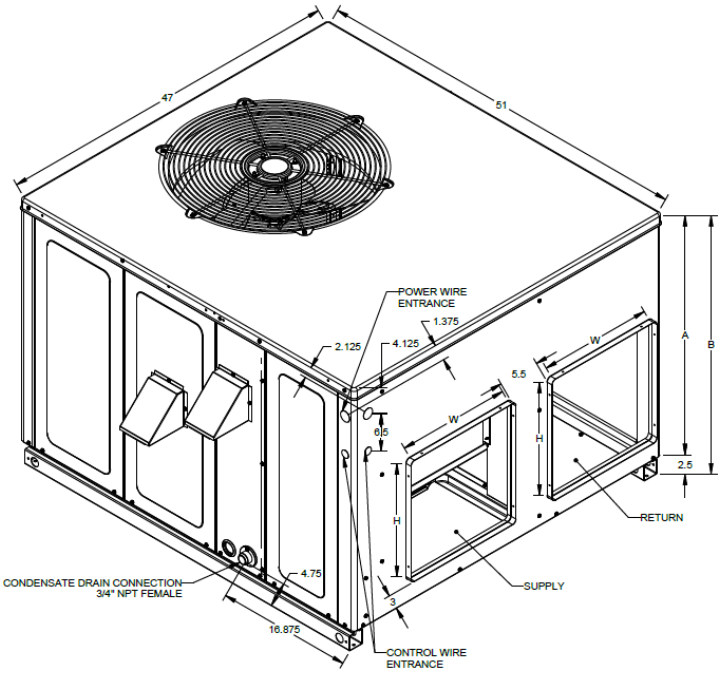

Model	Unit Dimensions (Inches)				Chassis Size
			Height		
	W	D	A	B	
APGM524***41**	47	51	32	34 1/2	Medium
APGM530***41**	47	51	32	34 1/2	Medium
APGM536***41**	47	51	40	42 1/2	Large
APGM542***41**	47	51	40	42 1/2	Large
APGM548***41**	47	51	40	42 1/2	Large

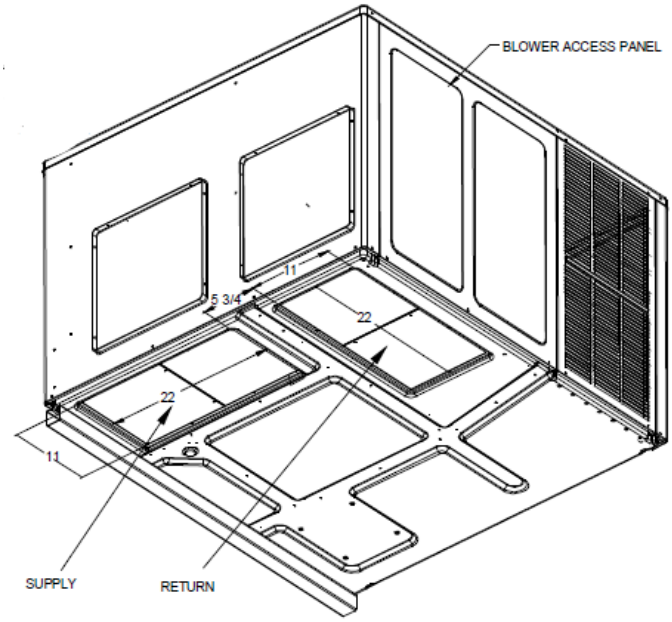

Model	Down Duct Openings			
	Supply		Return	
	W	H	W	H
APGM5 24-48	11	22	11	22

Model	Duct Opening			
	Supply		Return	
	W	D	A	B
APGM524***41**	16	16	16	16
APGM530***41**	16	16	16	16
APGM536***41**	16	18	16	18
APGM542***41**	16	18	16	18
APGM548***41**	16	18	16	18

WARNING

HIGH VOLTAGE!
Disconnect ALL power before servicing or installing this unit. Multiple power sources may be present. Failure to do so may cause property damage, personal injury or death.

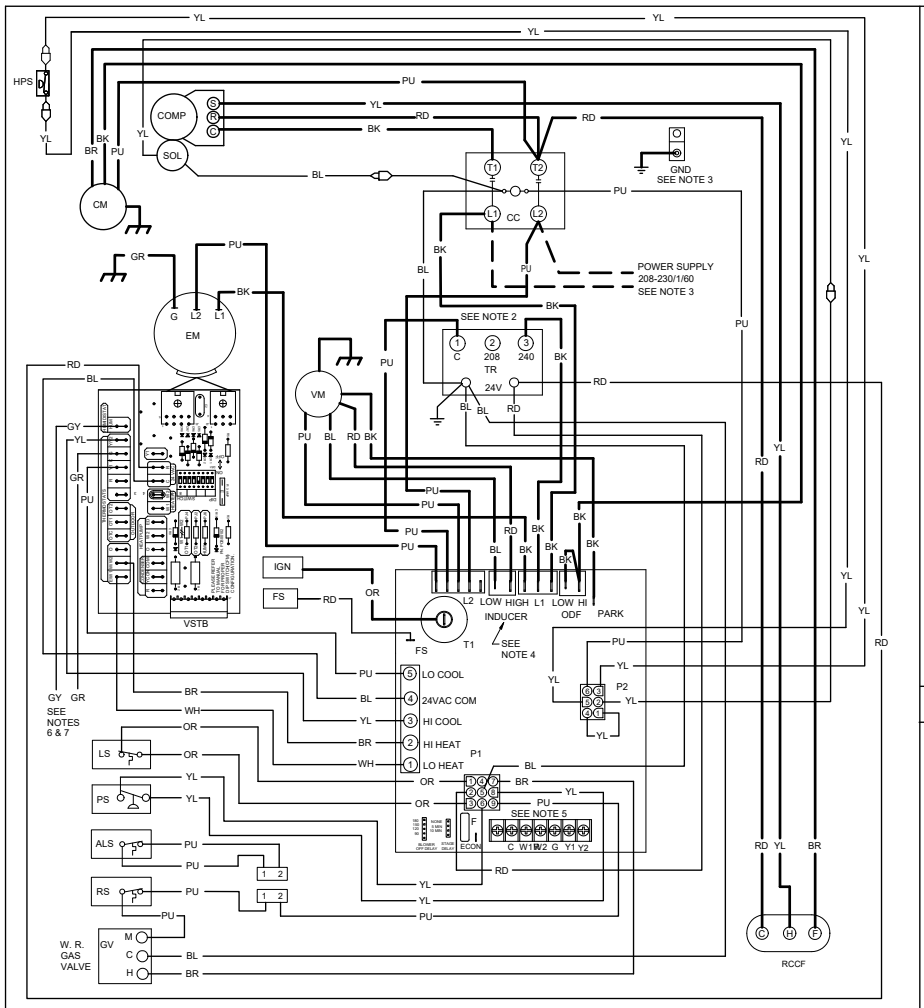

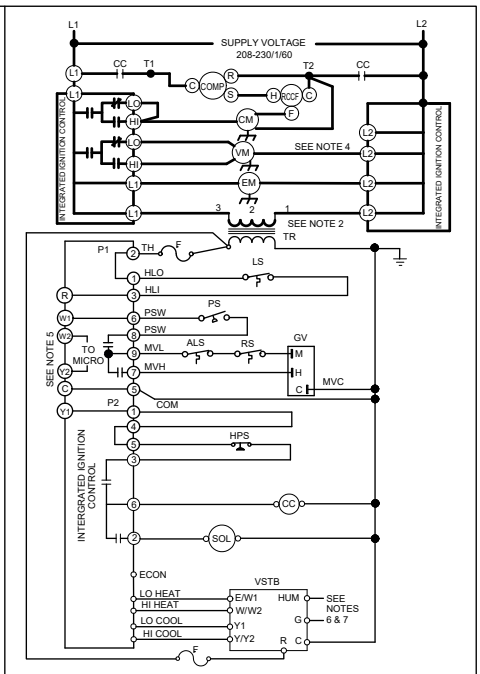

DIAGNOSTIC LED	FLASHES	STATUS	CHECK
RED	ON	NORMAL OPERATION	-
	OFF	NO POWER OR INTERNAL CONTROL FAULT	CHECK INPUT POWER CHECK FUSE(B) REPLACE CONTROL
	1 FLASH	IGNITION FAILURE	GAS FLOW GAS PRESSURE GAS VALVE FLAME SENSOR CHECK AUXILIARY LIMIT SW. CHECK ROLLOUT LIMIT SW.
	2 FLASHES	PRESSURE SWITCH OPEN	CHECK PRESSURE SWITCH CHECK TUBING CHECK VENT MOTOR
	3 FLASHES	PRESSURE SWITCH CLOSED WITHOUT INDUCER ON	CHECK PRESSURE SWITCH CHECK WIRING FOR SHORTS
	4 FLASHES	OPEN LIMIT SWITCH	CHECK MAIN LIMIT SWITCH
	5 FLASHES	FALSE FLAME DETECTED	CHECK GAS VALVE CHECK FOR SHORTS IN FLAME SENSOR WIRING
	6 FLASHES	COMPR. SHORT CYCLE DELAY	3 MIN COMP. SHORT CYCLE DELAY
	7 FLASHES	LIMIT OPEN 5 TIMES IN SAME CALL FOR HEAT	CHECK MAIN LIMIT SWITCH
	8 FLASHES	IDT/ODT OPEN	CHECK JUMPER BETWEEN 1 AND 4 ON 6-CIRCUIT CONNECTOR
	9 FLASHES	PSW/LOC OPEN	CHECK REFRIGERANT SWITCHES FOR LOSS OF CHARGE OR HIGH HEAD PRESSURE
AMBER	OFF	NO FLAME PRESENT	-
	ON	NORMAL FLAME PRESENT	-
	1 FLASH	LOW FLAME SIGNAL	GAS FLOW GAS PRESSURE GAS VALVE FLAME SENSOR
	2 FLASHES	FALSE FLAME DETECTED	CHECK GAS VALVE CHECK FOR SHORTS IN FLAME SENSOR WIRING

COMPONENT LEGEND

ALS	AUXILLARY LIMIT SWITCH	TH	TRANSFORMER HIGH
CC	CONTACTOR	HLO	HI LIMIT OUTPUT
CM	CONDENSER MOTOR	HLI	HI LIMIT INPUT
COMP	COMPRESSOR	PSW	PRESSURE SWITCH
EM	EVAPORATOR MOTOR	MVL	MAIN GAS VALVE LOW
F	FUSE	MVH	MAIN GAS VALVE HIGH
FS	FLAME SENSOR	MVC	MAIN GAS VALVE COMMON
GND	EQUIPMENT GROUND		
GV	GAS VALVE		
HPS	HIGH PRESSURE SWITCH		
IGN	IGNITOR		
IIC	INTEGRATED IGNITION CONTROL		
LS	LIMIT SWITCH		
ODF	OUTDOOR FAN		
PS	PRESSURE SWITCH		
RCCF	RUN CAPACITOR FOR COMPRESSOR/FAN		
RS	ROLLOUT SWITCH		
SOL	SOLENOID (2ND STAGE COOL)		
TR	TRANSFORMER		
VM	VENT MOTOR		
VSTB	VARIABLE SPEED TERMINAL BOARD		

FACTORY WIRING
- LINE VOLTAGE
- LOW VOLTAGE
- OPTIONAL HIGH VOLTAGE

FIELD WIRING
- HIGH VOLTAGE
- LOW VOLTAGE

WIRE CODE

BK	BLACK
BL	BLUE
BR	BROWN
GR	GREEN
GY	GRAY
OR	ORANGE
PK	PINK
PU	PURPLE
RD	RED
WH	WHITE
YL	YELLOW

NOTES

1. REPLACEMENT WIRE MUST BE THE SAME SIZE AND TYPE OF INSULATION AS ORIGINAL.(USE COPPER CONDUCTOR ONLY).
2. FOR 208 VOLT TRANSFORMER OPERATION MOVE BLACK WIRE FROM TERMINAL 3 TO TERMINAL 2 ON TRANSFORMER.
3. USE COPPER CONDUCTORS ONLY
4. FOR 208V OPERATION, REMOVE BLUE LEAD FROM INDUCER LOW TERMINAL. MOVE BLACK LEAD FROM PARK TERMINAL ONTO INDUCER LOW TERMINAL. PLACE BLUE LEAD ON PARK TERMINAL.
5. USE NEC CLASS 2 WIRE FOR THERMOSTAT FIELD WIRING.
6. FOR ALTERNATE CONTINUOUS FAN SPEED, CONNECT FAN TERMINAL FROM ROOM THERMOSTAT TO GREEN WIRE FROM VSTB; SEE INSTALLATION INSTRUCTIONS FOR DETAILS.
7. FOR DEHUMIDIFICATION, CONNECT A 24VAC DEHUMIDISTAT THAT OPENS ON HUMIDITY RISE TO GRAY WIRE FROM THE VSTB AND TO R ON IIC; SEE INSTALLATION INSTRUCTIONS FOR DETAILS. CUT "HUM" JUMPER ON VSTB.

0140G04534-B

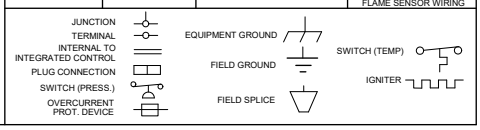

Wiring is subject to change. Always refer to the wiring diagram on the unit for the most up-to-date wiring.

BLOWER PERFORMANCE DATA

APGM52406041** - Rise Range: 25° - 55°						
Tap	Low Cool	High Cool	Low Heat		High Heat	
			CFM	Rise	CFM	Rise
A-	505	675	540	63	720	63
A	565	750	600	56	800	56
A+	620	825	660	51	880	51
B-	540	720	610	55	810	56
B	600	800	675	50	900	50
B+	660	880	745	45	990	45
C-	560	745	660	51	880	51
C	620	825	735	46	980	46
C+	685	910	810	42	1075	42
D-	575	765	X	X	X	X
D	640	850	X	X	X	X
D+	700	935	X	X	X	X

APGM53006041** - Rise Range: High Fire 35° - 65° Low Fire 25° - 55°						
Tap	Low Cool	High Cool	Low Heat		High Heat	
			CFM	Rise	CFM	Rise
A-	545	810	720	63	960	63
A	605	900	800	56	1065	56
A+	665	990	880	51	1170	51
B-	605	900	810	56	1075	56
B	670	1000	900	50	1195	50
B+	735	1100	990	45	1315	46
C-	650	970	900	50	1195	50
C	720	1075	1000	45	1330	45
C+	795	1185	1100	41	1465	41
D-	665	990	X	X	X	X
D	735	1100	X	X	X	X
D+	810	1210	X	X	X	X

APGM53608041** - Rise Range: 35° - 65°						
Tap	Low Cool	High Cool	Low Heat		High Heat	
			CFM	Rise	CFM	Rise
A-	680	1015	720	63	960	63
A	755	1125	800	56	1065	56
A+	830	1240	880	51	1170	51
B-	725	1080	810	56	1075	56
B	805	1200	900	50	1195	50
B+	885	1320	990	45	1315	46
C-	755	1125	900	50	1195	50
C	840	1250	1000	45	1330	45
C+	920	1375	1100	41	1465	41
D-	800	1195	X	X	X	X
D	890	1325	X	X	X	X
D+	980	1460	X	X	X	X

APGM54210041** - Rise Range: 35° - 65°						
Tap	Low Cool	High Cool	Low Heat		High Heat	
			CFM	Rise	CFM	Rise
A-	970	1170	915	61	1215	62
A	1080	1300	1015	55	1350	56
A+	1185	1430	1115	50	1485	51
B-	1045	1260	1015	55	1350	56
B	1160	1400	1125	50	1495	50
B+	1280	1540	1240	45	1650	45
C-	1085	1305	1125	50	1495	50
C	1205	1450	1250	45	1665	45
C+	1325	1595	1375	41	1830	41
D-	1120	1350	X	X	X	X
D	1245	1500	X	X	X	X
D+	1370	1650	X	X	X	X

APGM54810041** - Rise Range: 35° - 65°						
Tap	Low Cool	High Cool	Low Heat		High Heat	
			CFM	Rise	CFM	Rise
A-	1150	1305	900	63	1195	63
A	1275	1450	1000	56	1330	56
A+	1405	1595	1100	51	1465	51
B-	1190	1350	1015	55	1350	56
B	1320	1500	1125	50	1495	50
B+	1450	1650	1240	45	1650	45
C-	1230	1395	1125	50	1495	50
C	1365	1550	1250	45	1665	45
C+	1500	1705	1375	41	1830	41
D-	1265	1440	X	X	X	X
D	1410	1600	X	X	X	X
D+	1550	1760	X	X	X	X

X = Outside of Temperature Rise Range - Not Recommended.

APGM5** CFM OUTPUT AND DIP SWITCH SETTINGS

		CFM Output for DIP Switches 1-2 / Heating				CFM Output for DIP Switches 5-6 / Cooling			
MODEL	SPEED TAP	Switch 1	Switch 2	Low Heat CFM	High Heat CFM	Switch 5	Switch 6	Low Cool CFM	High Cool CFM
APGM52406041**	A	OFF	OFF	600	800	OFF	OFF	565	750
	B	ON	OFF	675	900	ON	OFF	600	800
	C	OFF	ON	735	980	OFF	ON	620	825
	D	ON	ON	X	X	ON	ON	640	850
APGM53008041**	A	OFF	OFF	800	1065	OFF	OFF	605	900
	B	ON	OFF	900	1195	ON	OFF	670	1000
	C	OFF	ON	1000	1330	OFF	ON	720	1075
	D	ON	ON	X	X	ON	ON	735	1100
APGM53608041**	A	OFF	OFF	800	1065	OFF	OFF	755	1125
	B	ON	OFF	900	1195	ON	OFF	805	1200
	C	OFF	ON	1000	1330	OFF	ON	840	1250
	D	ON	ON	X	X	ON	ON	890	1325
APGM54210041**	A	OFF	OFF	1015	1350	OFF	OFF	1080	1300
	B	ON	OFF	1125	1495	ON	OFF	1160	1400
	C	OFF	ON	1250	1665	OFF	ON	1205	1450
	D	ON	ON	X	X	ON	ON	1245	1500
APGM54810041**	A	OFF	OFF	1015	1350	OFF	OFF	1275	1450
	B	ON	OFF	1125	1495	ON	OFF	1320	1500
	C	OFF	ON	1250	1665	OFF	ON	1365	1550
	D	ON	ON	X	X	ON	ON	1410	1600

x = Not recommended for heating application

DIP Switch Settings for Single and Two-Stage Thermostats

MODEL	SWITCH 3	SWITCH 4	THERMOSTAT
APGM5**	N/A	ON	SINGLE STAGE
	N/A	OFF	TWO-STAGE

Adjustments Through Dip Switch Combinations 7-8

CFM	SWITCH 7	SWITCH 8
+10%	ON	OFF
NORMAL	OFF	OFF
-10%	OFF	ON

PACKAGE UNITS - DUAL FUEL & GAS

HOMEOWNER'S ROUTINE MAINTENANCE RECOMMENDATIONS

*We strongly recommend a bi-annual maintenance checkup be performed by a **qualified service agency** before the heating and cooling seasons begin.*

WARNING

High Voltage!
Disconnect ALL power before servicing or installing thus unit. Multiple power sources may be present. Failure to do so may cause property damage, personal injury, or death.

Replace or Clean Filter

IMPORTANT NOTE: Never operate unit without a filter installed as dust and lint will build up on internal parts resulting in loss of efficiency, equipment damage and possible fire.

A return air filter is not supplied with this unit; however, there must be a means of filtering the return air. An indoor air filter must be used with your comfort system. A properly maintained filter will keep the indoor coil of your comfort system clean. A dirty coil could cause poor operation and/or severe equipment damage.

The installer of your unit can tell you where your filter(s) are and how to clean or replace them.

Check your return filter(s) at least once every two months. When they are dirty, replace or clean as required. Disposable type filters should be replaced. Reusable type filters may be cleaned.

NOTE: Reusable type filters should be washed with warm water, dried completely and sprayed with an adhesive according to the manufacturers recommendations.

You may want to ask your dealer about high efficiency filters. High efficiency filters are available in both electronic and non-electronic types. These filters can do a better job of catching small airborne particles.

Improper filter maintenance is the most common cause of inadequate heating or cooling performance. Filters should be cleaned (permanent) or replaced (disposable) every two months or as required. When replacing a filter, it must be replaced with a filter of the same type and size and always make certain the air flow arrows on the filter point in the proper direction.

Condenser, Evaporator and Induced Draft Motors

The bearings on the air circulating blower motor, condenser motor and the combustion fan motor are permanently lubricated and require no further lubrication.

Compressor

The compressor motor is hermetically sealed and does not require additional oiling.

Annual Inspection (Qualified Servicer Only)

Your package unit should be inspected by a qualified installer, or service agency at least twice every year. This check should be performed before the heating and cooling seasons begin. This will ensure that adequate combustion air is being drawn and the vent system is working properly. Particular attention should be paid to the following items. Repair as necessary.

- Check physical support of the unit. Ensure it is sound without any sagging, cracks, or gaps, around the base.
- Check for obvious signs of deterioration of the unit.
- Flue Hood and Combustion Air Inlet. Check for blockage (wasp nest, etc.) and corrosion.

Flue Hood (Qualified Servicer Only)

- Return Air Connection. Check for physical soundness and ensure that the connection is firmly sealed to the package unit casing.
- Heat exchanger. Check for corrosion and/or obstructions within the heat exchanger passageways.
- Burners. Check for proper ignition, burner flame, and flame sense.
- Wiring. Check wires for damage. Check electrical connections for tightness and/or corrosion.
- Filters. Check that filters are clean and in the proper placement in the unit or duct system.
- Louvers. Inspect air inlet louvers inside the heat exchanger compartments. Ensure the area is clean and free of dirt and debris.

Clean Outside Coil (Qualified Servicer Only)

The outdoor coil should be inspected annually. It is important to keep the outdoor coil clean. Dirt, leaves, or debris could restrict the airflow. If cleaning of the outdoor coil becomes necessary, hire a qualified servicer. Inexperienced people could easily puncture the tubing in the coil.

Before Calling Your Servicer

- Check the thermostat to confirm that it is properly set.
- Check the disconnect switch near the unit to confirm that it is closed.
- Check the electrical panel for tripped circuit breakers or failed fuses . Reset the circuit breakers or replace fuses as necessary.
- Check for blockage of the indoor air inlets and outlets. Confirm that they are open and have not been blocked by objects (rugs, curtains or furniture).
- Check for obstructions on the unit . Confirm that it has not been covered on the sides or the top. Remove any obstruction that can be safely removed. If the unit is covered with dirt or debris, call a qualified servicer to clean it.
- Check the filter. If it is dirty, clean or replace it.

START-UP CHECKLIST

Residential Package - (Indoor Section)					
		Model Number			
		Serial Number			
ELECTRICAL					
Line Voltage (Measure L1 and L2 Voltage)	L1 - L2				
Secondary Voltage (Measure Transformer Output Voltage)	R - C				
Blower Amps					
Heat Strip 1 - Amps					
Heat Strip 2 - Amps					
BLOWER EXTERNAL STATIC PRESSURE					
Return Air Static Pressure			IN. W.C.		
Supply Air Static Pressure			IN. W.C.		
Total External Static Pressure (Ignoring +/- from the reading above, add total here)			IN. W.C.		
TEMPERATURES					
Return Air Temperature (Dry bulb / Wet bulb)			DB °F		WB °F
Cooling Supply Air Temperature (Dry bulb / Wet bulb)			DB °F		WB °F
Heating Supply Air Temperature			DB °F		
Temperature Rise			DB °F		
Delta T (Difference between Supply and Return Temperatures)			DB °F		
GAS PRESSURES					
Gas Inlet Pressure			IN. W.C.		
Gas Manifold Pressure (Low Fire)			IN. W.C.		
Gas Manifold Pressure (High Fire)			IN. W.C.		
Gas Type (NG) = Natural Gas / (LP) = Liquid Propane					
Residential Package - (Outdoor Section)					
ELECTRICAL					
Supply Voltage (Measure L1 and L2 Voltage)	L1 - L2				
Compressor Amps					
Condenser Fan Amps					
PRESSURES / TEMPERATURES					
Suction Circuit (Pressure / Suction Line Temperature)	PSIG		TEMP		°F
Liquid Circuit (Pressure / Liquid Temperature)	PSIG		TEMP		°F
Outdoor Air Temperature (Dry bulb / Wet bulb)			DB °F		WB °F
SUPERHEAT / SUBCOOLING	SH		SC		
Additional Checks					
Check wire routings for any rubbing					
Check product for proper draining					
Check for kinked pressure switch tubing.					
Check flue elbow for alignment and clamp tightness.					
Check screw tightness on blower wheel.					
Check factory wiring and wire connections.					
Check screw tightness on Outdoor Motor and Blade					
Check product for proper clearances as noted by installtion instructions					
°F to °C formula: (°F - 32) divided by 1.8 = °C	**°C to °F formula: (°C multiplied by 1.8) + 32 = °F**				

CUSTOMER FEEDBACK
We are very interested in all product comments.
Please fill out the feedback form on one of the following links:
Goodman® Brand Products: (http://www.goodmanmfg.com/about/contact-us).
Amana® Brand Products: (http://www.amana-hac.com/about-us/contact-us).
You can also scan the QR code on the right for the product brand you purchased to be directed to the feedback page.

GOODMAN® BRAND

AMANA® BRAND

NOTE: SPECIFICATIONS AND PERFORMANCE DATA LISTED HEREIN ARE SUBJECT TO CHANGE WITHOUT NOTICE

Quality Makes the Difference!

All of our systems are designed and manufactured with the same high quality standards regardless of size or efficiency. We have designed these units to significantly reduce the most frequent causes of product failure. They are simple to service and forgiving to operate. We use quality materials and components. Finally, every unit is run tested before it leaves the factory.

That's why we know. . .**There's No Better Quality.**

© 2026 Daikin Comfort Technologies Manufacturing, Inc.
19001 Kermier Rd., Waller, TX 77484
www.amana-hac.com
AMANA HEATING & AIR CONDITIONING is a registered trademark of Whirlpool Corporation or its related companies and is used under license.
All rights reserved.