AMANA®

HEATING & AIR CONDITIONING

Window room air conditioner owner's Manual

WARNING

Only personnel that have been trained to install, adjust, service, maintenance or repair (hereinafter, "service") the equipment specified in this manual should service the equipment.

This equipment is not intended for use by persons (including children) with reduced physical, sensory or mental capacities, or lack of experience and knowledge, unless they have been given supervision or instruction concerning use of the appliance by a person responsible for their safety.

Children should be supervised to ensure that they do not play with the equipment.

The manufacturer will not be responsible for any injury or property damage arising from improper supervision, service or service procedures. If you service this unit, you assume responsibility for any injury or property damage which may result. In addition, in jurisdictions that require one or more licenses to service the equipment specified in this manual, only licensed personnel should service the equipment. Improper supervision, installation, adjustment, servicing, maintenance or repair of the equipment specified in this manual, or attempting to install, adjust, service or repair the equipment specified in this manual without proper supervision or training may result in product damage, property damage, personal injury or death.

WARNING

Do not bypass safety devices.

WARNING

Before using this product, please read this manual carefully and keep it for future reference. The design and specifications are subject to change without prior notice for product improvement. Consult with your dealer or the manufacturer for details. This unit does not guarantee the room will not be susceptible to freezing.

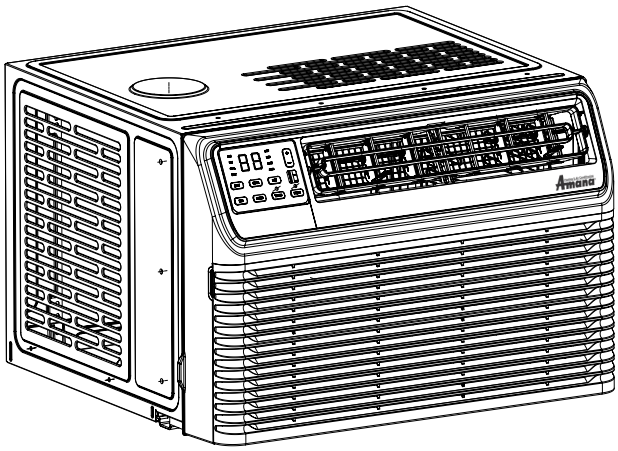

Models
AE093J35AA
AE123J35AA
AH093J35AA
AH123J35AA

CONTENTS

Safety Precaution 2
Safety and operation procedures for handling equipment 5
Operating Instructions 7
Installation Instructions 9
Care and Cleaning 12
Remote Control Specifications 10
Troubleshooting Tips 13
Wiring Diagram 14
Error Code description and suggested corrective action 16
Configuration menu 17
Profile Descriptions 18

19001 Kermier Rd., Waller, TX 77484 • www.amana-ptac.com

© 2026 Daikin Comfort Technologies Manufacturing, Inc.

AMANA HEATING & AIR CONDITIONING is a registered trademark of Whirlpool Corporation or its related companies and is used under license.
All rights reserved.

IO-954B
7/2026

SAFETY PRECAUTIONS

Inside you will find many helpful hints on how to use and maintain your air conditioner properly. Just a little preventive care on your part can save you a great deal of time and money over the life of your air conditioner. You'll find many answers to common problems in the chart of Troubleshooting Tips. If you review our chart of Troubleshooting Tips first, you may not need to call for service at all.

To prevent injury to the user or other people and property damage, the following instructions must be followed. Incorrect operation due to ignoring of instructions may cause harm or damage. The seriousness is classified by the following indications.

WARNING

This signal word indicates a hazard with a high level of risk which, if not avoided, may result in serious injury or death.

CAUTION

This signal word indicates a hazard with a low degree of risk which, if not avoided, may result in minor or moderate injury.

WARNING

Plug in power cord properly. Otherwise, it may cause electric shock or fire due to excess heat generation. Do not operate or stop the unit by inserting or pulling out the power cord. It may cause electric shock or fire due to heat generation. Do not damage or use an unspecified power cord. It may cause electric shock or fire.

WARNING

The power cord plug should be inserted into a standard receptacle.

WARNING

Always install a circuit breaker and a dedicated power circuit. Incorrect installation may cause fire and electric shock. Do not operate with wet hands or in damp environment. It may cause electric shock . Do not direct airflow at room occupants only. This could damage your health. Always ensure effective grounding. Incorrect grounding may cause electric shock. Do not allow water to run into electric parts. It may cause failure of machine or electric shock.

WARNING

Do not modify power cord length or share the outlet with other appliances. It may cause electric shock or fire due to heat generation.

WARNING

Unplug the unit if strange sounds, smell, or smoke comes from it. It may cause fire and electric shock. Do not use the receptacle if it is loose or damaged. It may cause fire and electric shock. Do not open the unit during operation. It may cause electric shock.

WARNING

Do not use the power cord close to heating appliances. It may cause fire and electric shock. Do not use the power cord near flammable gas or combustibles, such as gasoline, benzene, thinner, etc. It may cause an explosion or fire.

WARNING

Ventilate room before operating air conditioner if there is a gas leakage from another appliance. It may cause explosion, fire and, burns. Do not disassemble or modify unit. It may cause failure and electric shock.

CAUTION

Do not use strong detergent such as wax or thinner but use a soft cloth to clean the unit. Appearance may be deteriorated due to change of product color or scratching of its surface. Do not clean the air conditioner with water. Water may enter the unit and degrade the insulation. It may cause an electric shock. Do not use this air conditioner to preserve precision devices, food, pets, plants, and art objects, it may cause deterioration of quality, etc.

CAUTION

When the unit is to be cleaned, switch off, and turn off the circuit breaker.

CAUTION

Do not clean unit when power is on as it may cause fire and electric shock, it may cause an injury.

CAUTION

Always insert the filters securely. It can cause a failure if operated without filters. Please clean filter once every two weeks.

CAUTION

Do not place obstacles around air-inlets or inside of air-outlet. It may cause failure of appliance or accident. Do not place heavy object on the power cord and ensure that the cord is not compressed. There is danger of fire or electric shock. Don't drink water drained from air conditioner. It contains contaminants and could make you sick.

CAUTION

Use caution when unpacking and installing. Sharp edges could cause injury.

CAUTION

If water enters the unit, turn the unit off at the power outlet by switching off the circuit breaker. Isolate supply by taking the power-plug out and contact a qualified service technician.

CAUTION

This appliance is not intended for use by persons(including children) with reduced physical ,sensory or mental capabilities or lack of experience and knowledge, unless they have been given supervision or instruction concerning use of the appliance by a person responsible for their safety.

CAUTION

If the supply cord is damaged, it must be replaced by the manufacturer, its service agent or similarly qualified persons in order to avoid a hazard.

CAUTION

The appliance shall be installed in accordance with national wiring regulations.

CAUTION

Installation must be performed in accordance with the requirement of NEC and CEC by authorized personnel only.

CAUTION

Do not operate your air conditioner in a wet room such as a bathroom or laundry room.

CAUTION

The appliance with electric heater shall have at least 1 meter space to any and all combustible materials.

CAUTION

Contact an authorized service technician for repair or maintenance of this unit.

CAUTION

Contact an authorized installer for installation of this unit.

WARNING

The unit must have an uninterrupted, unbroken electrical ground to minimize the possibility of personal injury if an electrical fault should occur. Installation to be performed in accordance with the "national electric code" (NEC) "American National Standards institute" (ANSI) "National Fire Protection association" (NFPA) 70 and local/state codes. In Canada, installation to be performed in accordance with the Canadian electric code CSA C22.1. Failure to observe this warning can result in electrical shock that can cause personal injury or death.

CAUTION

Hold the power cord by the head of the power plug when taking it out. Take necessary safety precaution as it may cause electric shock and damage. Turn off the main power switch when not using the unit for a long time.

Operation of Current Device

The power supply cord contains a current device that senses damage to the power cord. To test your power supply cord do the following:

- Plug in the Air Conditioner.
- The power supply cord will have TWO buttons on the plug head. Press the TEST button, you will notice a click as the RESET button pops out.
- Press the RESET button again, you will notice a click as the button engages. The power supply cord is now supplying electricity to the unit. (On some products this is also indicated by a light on the plug head).

NOTE:

- The power supply cord with this air conditioner contains a current detection device designed to reduce the risk of fire.
- Do not use this device to turn the unit on or off.
- Always make sure the RESET button is pushed in for correct operation.
- The power supply cord must be replaced if it fails to reset when either the TEST button is pushed or if it cannot be reset. A new cord can be obtained from the product manufacturer.
- If power supply cord is damaged, it cannot be repaired. It MUST be replaced by one obtained from the product manufacturer.

Grounding type wall receptacle

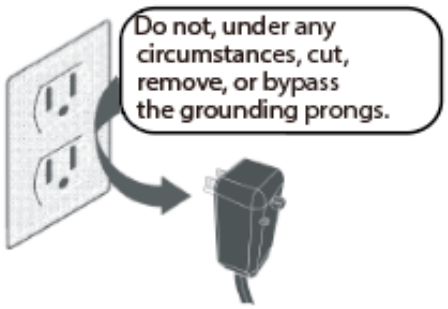

Power supply cord with 3-prong grounding plug and current detection device.

Electrical Information

The complete electrical rating of your new room air conditioner is stated on the serial plate. Refer to the rating when checking the electrical requirements.

- Be sure the air conditioner is properly grounded. To minimize shock and fire hazards, proper grounding is important. The power cord is equipped with a three-prong grounding plug for protection against shock hazards.
- Your air conditioner must be used in a properly grounded wall receptacle. If the wall receptacle you intend to use is not adequately grounded or protected by a time delay fuse or circuit breaker, have a qualified electrician install the proper receptacle. Ensure the receptacle is accessible after the unit installation.
- Do not run air conditioner without side protective cover in place. This could result in mechanical damage within the air conditioner.

Avoid fire hazard or electric shock. Do not use an extension cord or an adapter plug. Do not remove any prongs from the power cord.

For Your Safety

Do not store or use gasoline or other flammable vapors and liquids in the vicinity of this or any other appliance.

Prevent Accidents

To reduce the risk of fire, electrical shock, or injury to persons when using your air conditioner, follow basic precautions, including the following:

- Be sure the electrical service is adequate for the model you have chosen. This information can be found on the serial plate, which is located on the front of basepan and behind the front cover.
- Be sure the air conditioner has been securely and correctly installed according to the installation instructions in this manual. Save this manual for possible future use in removing or installing this unit. When handling the air conditioner, be careful to avoid cuts from sharp metal fins on front and rear coils.

Electronic Work

WARNING

Before performing any electrical or wiring work, turn off the main power to the system.

NOTE: Please strictly follow the wiring label attached to the machine for all wiring connections. The wiring diagram may vary for different units. Please refer to the wiring diagram on the machine you have purchased.

Electrical Requirements

Electrical Shock and Personal Injury Hazard
Electrical ground is required on this appliance.
DO NOT ground to a gas line.
DO NOT use for grounding.
If cold water pipe is interrupted by plastic,non metallic gaskets, or other insulating materials, check with a qualified electrician if you are in doubt as to whether the appliance is properly grounded.

DO NOT modify power supply cord plug. If it does not fit outlet, have a proper outlet installed by a qualified electrician.
DO NOT have a fuse in the neutral or grounding circuit. A fuse in the neutral, or grounding circuit could result in an electrical shock.
DO NOT use an extension cord with this appliance. Failure to follow these instructions could result in electrical shock, serious injury, or death.
Observe all local governing codes and ordinances.
Do not, under any circumstances, remove the power supply cord grounding prong.

NOTE: If codes permit, and a separate grounding wire is used; it is recommended that a qualified electrician determine that the grounding path is adequate and not interrupted by plastic, nonmetallic gaskets, or other insulating materials.

Receptacle wiring

Receptacle wiring must be of adequate size for unit. Refer to unit identification plate for exact power requirements. Minimum size of wiring, based on power requirements, is:

Units up to 20amps: 12 gauge
20-30 amps units: 10 gauge

Use copper wire only. Consumer's responsibility is to provide proper and adequate receptacle wiring that conforms to all applicable codes. All wiring should be installed by a qualified electrician.

Electrical requirements

A time delay fuse or time delay circuit breaker is also required. A separate circuit, serving only this appliance, MUST be provided.

NOTE: for details about the parameters of the electric heating function, see the nameplate on the unit.

WARNING

Servicing shall only be performed as recommended by the equipment manufacturer. Maintenance and repair requiring the assistance of other skilled personnel shall be carried out under the supervision of the person competent in the use of flammable refrigerants.

WARNING

DO NOT modify the length of the power cord or use an extension cord to power the unit.

WARNING

DO NOT share a single outlet with other electrical appliances. Improper power supply can cause fire or electrical shock.

WARNING

Please follow the instruction carefully to handle, install, clean, and service the appliance to avoid any damage or hazard.

Flammable

Refrigerant R32 is used within appliance.

- When maintaining or disposing of the appliance, the refrigerant (R32) shall be recovered properly, and shall not be discharged to the air directly.
- Compliance with national gas regulations shall be observed.
- Keep ventilation openings clear of obstruction.
- The appliance shall be stored so as to prevent mechanical damage from occurring.
- The appliance shall be stored in a well-ventilated area where the room size corresponds to the room area as specified for operation.
- Any person who is involved with working on or breaking into a refrigerant circuit should hold a current valid certificate from an industry-accredited assessment authority, which authorizes their competence to handle refrigerants safely in accordance with an industry recognized assessment specification. All training shall follow the ANNEX HH requirements of UL 60335-2-40 4th Edition.
  Examples for such working procedures are:
  - breaking into the refrigerating circuit;
  - opening of sealed components;
  - opening of ventilated enclosures.
- No open fire or device like a switch which may generate spark/arcing shall be around appliance to avoid causing ignition of the flammable refrigerant used. Please follow the instructions carefully when storing or maintaining the appliance to prevent mechanical damage from occurring.
- Do not use means to accelerate the defrosting process or to clean, other than those recommended by the manufacturer.
- The appliance shall be stored in a room without continuously operating ignition sources (for example: open flames, an operating gas appliance) and ignition sources or (for example: an operating electric heater) close to the appliance.
- Do not pierce or burn.

Be aware that the refrigerants may not contain an odor.

	WARNING	This symbol shows that this appliance used a flammable refrigerant. If the refrigerant is leaked and exposed to an external ignition source, there is a risk of fire.
	CAUTION	This symbol shows that the operation manual should be read carefully.
	CAUTION	This symbol shows that a service personnel should be handling this equipment with reference to the installation manual.
	CAUTION	This symbol shows that information is available such as the operating manual or installation manual.

SAFETY AND OPERATIONAL PROCEDURES FOR HANDLING EQUIPMENT

1. Transport of equipment containing flammable refrigerants

See transport regulations.

2. Marking of equipment using signs

See local regulations.

3. Disposal of equipment using flammable refrigerants

See national regulations.

4. Storage of equipment/appliances

The storage of the appliance should be in accordance with the applicable regulations or manufacturer's instructions, whichever is more stringent.

5. Storage of packed (unsold) equipment

Storage package protection should be constructed such that mechanical damage to the equipment inside the package will not cause a leak of the refrigerant charge. The maximum number of pieces of equipment permitted to be stored together will be determined by local regulations.

6. Information on servicing

6.1 Checks to the area

Prior to beginning work on systems containing flammable refrigerants, safety checks are necessary to ensure that the risk of ignition is minimized. For repair to the refrigerating system, the following precautions shall be complied with prior to conducting work on the system.

6.2 Work procedure

Work shall be undertaken under a controlled procedure so as to minimize the risk of a flammable gas or vapor being present while the work is being performed.

6.3 General work area

All maintenance staff and others working in the local area shall be instructed on the nature of work being carried out. Work in confined spaces shall be avoided. The area around the workspace shall be sectioned off. Ensure that the conditions within the area have been made safe by control of flammable material.

6.4 Checking for presence of refrigerant

The area shall be checked with an appropriate refrigerating leak detector prior to and during work, to ensure the technician is aware of potentially flammable atmospheres. Ensure that the leak detection equipment being used is suitable for use with flammable refrigerants, i.e. non-sparking, adequately sealed or intrinsically safe.

6.5 Presence of fire extinguisher

If any hot work is to be conducted on the refrigeration equipment or any associated parts, appropriate fire extinguishing equipment shall be available on hand. Have a dry powder or CO2 fire extinguisher adjacent to the hot work area.

6.6 No ignition sources

No person carrying out work in relation to a refrigerating system which involves exposing any pipe work that contains or has contained flammable refrigerant shall use any sources of ignition in such a manner that it may lead to the risk of fire or explosion. All possible ignition sources, including cigarette smoking, should be kept sufficiently far away from the site of installation, repairing, removing and disposal, during which flammable refrigerant can possibly be released to the surrounding space. Prior to work taking place, the area around the equipment is to be surveyed to make sure that there are no flammable hazards or ignition risks. No Smoking signs shall be displayed.

6.7 Ventilated area

Ensure that the area is in the open or that it is adequately ventilated before breaking into the system or conducting any hot work. A degree of ventilation shall continue during the period that the work is carried out. The ventilation should safely disperse any released refrigerant and preferably expel it externally into the atmosphere.

6.8 Checks to the refrigerating equipment

Where electrical components are being changed, they shall be fit for the purpose and to the correct specifications. At all times the manufacturer's maintenance and service guidelines shall be followed. If in doubt consult the manufacturer's technical department for assistance. The following checks shall be applied to installations using flammable refrigerants: the actual refrigerant charge is in accordance with the room size within which the refrigerant containing parts are installed; the ventilation machinery and outlets are operating adequately and are not obstructed; if an indirect refrigerating circuit is being used, the secondary circuit shall be checked for the presence of refrigerant; marking to the equipment continues to be visible and legible; markings and signs that are illegible shall be corrected; and refrigerating pipe or components are installed in a position where they are unlikely to be exposed to any substance which may corrode refrigerant containing components, unless the components are constructed of materials which are inherently resistant to being corroded or are suitably protected against being so corroded.

6.9 Checks to electrical devices

Repair and maintenance to electrical components shall include initial safety checks and component inspection procedures. If a fault exists that could compromise safety, then no electrical supply shall be connected to the circuit until it is satisfactorily dealt with. Initial safety checks shall include: That capacitors are discharged: this shall be done in a safe manner to avoid possibility of sparking; that there no live electrical components and wiring are exposed while charging, recovering or purging the system; that there is continuity of earth bonding.

7. Sealed electrical components shall be replaced specified by the manufacturer in service part list.

8. Intrinsically safe components must be replaced specified by the manufacturer in service part list.

9. Cabling

Check that cabling will not be subject to wear, corrosion, excessive pressure, vibration, sharp edges or any other adverse environmental effects. The check shall also take into account the effects of aging or continual vibration from sources such as compressors or fans.

10. Detection of flammable refrigerants

Under no circumstances shall potential sources of ignition be used in the searching for or detection of refrigerant leaks. A halide torch (or any other detector using a naked flame) shall not be used. The following leak detection methods are deemed acceptable for systems containing flammable refrigerants. Electronic leak detectors shall be used to detect flammable refrigerants, but the sensitivity may not be adequate, or may need re-calibration. (Detection equipment shall be calibrated in a refrigerant-free area.) Ensure that the detector is not a potential source of ignition and is suitable for the refrigerant used. Leak detection equipment shall be set at a percentage of the LFL of the refrigerant and shall be calibrated to the refrigerant employed and the appropriate percentage of gas (25% maximum) is confirmed. Leak detection fluids are suitable for use with most refrigerants but the use of detergents containing chlorine shall be avoided as the chlorine may react with the refrigerant and corrode the copper pipe-work. If a leak is suspected, all naked flames shall be removed/extinguished. If a leakage of refrigerant is found which requires brazing, all of the refrigerant shall be recovered from the system, or isolated (by means of shut off valves) in a part of the system remote from the leak. Removal of refrigerant shall be according to Removal and evacuation.

11. Removal and evacuation

When breaking into the refrigerant circuit to make repairs—or for any other purpose - conventional procedures shall be used. However, the flammability classification for any refrigerant must be considered. The following procedure shall be adhered to:

-Safely remove refrigerant following local and national regulations;
-Evacuate;
-Purge the circuit with inert gas (optional for A2L);
-Evacuate (optional for A2L);
-continuously flush or purge with inert gas when using flame to open circuit; and
-open the circuit.

The refrigerant charge shall be recovered into the correct recovery cylinders. For appliances containing flammable refrigerants, the system shall be purged with oxygen-free nitrogen to render the appliance safe for flammable refrigerants. This process might need to be repeated several times. Compressed air or oxygen shall not be used for purging refrigerant systems.

For appliances containing flammable refrigerants, refrigerants purging shall be achieved by breaking the vacuum in the system with oxygen-free nitrogen and continuing to fill until the working pressure is achieved, then venting to atmosphere, and finally pulling down to a vacuum (optional for A2L). This process shall be repeated until no refrigerant is within the system (optional for A2L). When the final oxygen-free nitrogen charge is used. The system shall be vented down to atmospheric pressure to enable work to take place. The outlet for the vacuum pump shall not be close to any potential ignition sources, and ventilation shall be available.

12. Charging procedures

In addition to conventional charging procedures, the following requirements shall be followed. Ensure that contamination of different refrigerants does not occur when using charging equipment. Hoses or lines shall be as short as possible to minimize the amount of refrigerant contained in them. Cylinders shall be kept in an appropriate position according to the instructions. Ensure that the refrigeration system is grounded prior to charging the system with refrigerant. Label the system when charging is complete (if not already). Extreme care shall be taken not to overfill the refrigeration system. Prior to recharging the system it shall be pressure tested with OFN (Oxygen-Free Nitrogen). The system shall be leak tested on completion of charging but prior to commissioning. A follow up leak test shall be carried out prior to leaving the site.

13. Decommissioning

Before carrying out this procedure, it is essential that the technician is completely familiar with the equipment and all its detail. It is recommended good practice that all refrigerants are recovered safely. Prior to the task being carried out, an oil and refrigerant sample shall be taken in case analysis is required prior to re-use of reclaimed refrigerant. It is essential that electrical power is available before the task is commenced.

a. Become familiar with the equipment and its operation.
b. Isolate system electrically.
c. Before attempting the procedure ensure that: mechanical handling equipment is available, if required, for handling refrigerant cylinders; all personal protective equipment is available and being used correctly; the recovery process is supervised at all times by a competent person; recovery equipment and cylinders conform to the appropriate standards.
d. Pump down refrigerant system, if possible.
e. If a vacuum is not possible, make a manifold so that refrigerant can be removed from various parts of the system.
f. Make sure that cylinder is situated on the scales before recovery takes place.
g. Start the recovery machine and operate in accordance with instructions.
h. Do not overfill cylinders. (No more than 80% volume liquid charge.)
i. Do not exceed the maximum working pressure of the cylinder, even temporarily.
j. When the cylinders have been filled correctly and the process completed, make sure that the cylinders and the equipment are removed from site promptly and all isolation valves on the equipment are closed off.
k. Recovered refrigerant shall not be charged into another refrigeration system unless it has been cleaned and checked.

14. Labeling
Equipment shall be labeled stating that it has been decommissioned and emptied of refrigerant. The label shall be dated and signed. Ensure that there are labels on the equipment stating the equipment contains flammable refrigerant.

15. Recovery
When removing refrigerant from a system, either for servicing or decommissioning, all refrigerants must be removed safely. When transferring refrigerant into cylinders, ensure that only appropriate refrigerant recovery cylinders are employed. Ensure that the correct number of cylinders for holding the total system charge is available. All cylinders to be used are designated for the recovered refrigerant and labeled for that refrigerant (i.e., special cylinders for the recovery of refrigerant). Cylinders shall be complete with pressure-relief valve and associated shut-of valves in good working order. Empty recovery cylinders are evacuated and, if possible, cooled before recovery occurs. All recovery equipment must be suitable for the recovery of A2L refrigerant and in good working order. Ensure that you follow the manufacturer's instructions carefully. If in doubt, the manufacturer should be consulted. In addition, a set of calibrated weighing scales shall be available and in good working order. Hoses shall be complete with leak-free disconnect couplings and in good condition.
The recovered refrigerant shall be processed according to local legislation in the correct recovery cylinder, and the relevant waste transfer note arranged. Do not mix refrigerants in recovery units and especially not in cylinders. If compressors or compressor oils are to be removed, ensure that they have been evacuated to an acceptable level to make certain that flammable refrigerant does not remain within the lubricant. The compressor body shall not be heated by an open flame or other ignition sources to accelerate this process. When oil is drained from a system, it shall be carried out safely.

OPERATING INSTRUCTIONS

NOTE: All the pictures in this manual are for illustrative purposes only. The actual shape of the air conditioner you purchased may be slightly different, but its operation and functions will be similar.

Operating Conditions:
This air conditioner is designed to be operated under the following conditions:

Cooling Mode	Outdoor Temp	65 ~ 120°F / 18.3 ~ 48.8°C
	Indoor Temp	60 ~ 90°F / 15 ~ 32.2°C
Heating Mode	Outdoor Temp	14 ~ 75°F / -10 ~ 23.9°C
	Indoor Temp	30 ~ 80.6°F / 0 ~ 27°C

WARNING

To reduce the risk of fire, electrical shock, or injury to people or property, read the safety precautions before operating this appliance.

NOTE: The relative humidity of room should be less than 80%. If the unit is used in a condition with a relative humidity over 80%, there may be condensed water on the surface of the unit. Performance may be reduced outside of these operating temperatures.

Always wait 3 minutes when turning unit off and then on again, or when changing from cool/heat mode to fan mode and back to cool/heat mode. This prevents compressor from overheating and possible tripping.

Keypad Details and unit features:

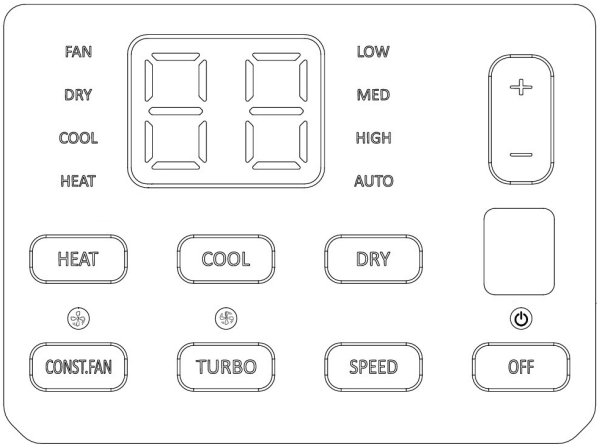

LED Display:
The LED display shows the status of the unit in various modes.

NOTE: In the case of any error in the unit, the corresponding error codes will be displayed on the unit. Refer to the Troubleshooting Tips section to know more about error codes and their possible solutions.

If the unit shuts off unexpectedly due to a power outage, it will restart with the previous function setting automatically when the power resumes.

To turn unit on or off:
Press the OFF button to turn OFF the unit. When the unit is in standby mode, press any mode key to operate machine in that mode.

To change temperature settings:
Press the +/- button to change temperature settings. Press the +/- button till the desired temperature is shown on the display LEDs.

Speed:
Press the Speed button to change the indoor side fan speed of the unit. Fan speed can be Low, Medium, High, or Auto as per the selection from the button. Corresponding LED will start glowing on the display panel to highlight the selected fan speed.
While changing fan speed of the unit, the following will be displayed on the unit:

Low Speed - F1
Med Speed - F2
High Speed - F3
Auto Speed – FA

Turbo:
The unit can be operated in Turbo function, in which the indoor side fan speed will increase to deliver quick comfort to the user. This mode will also bypass the 3-minute waiting time for the compressor to turn on (first time only).

Constant Fan:
Press constant fan button to enable constant fan feature. When set temp is achieved, Compressor will turn OFF, but Indoor Fan will run continuously. Disabling Constant Fan will result in Indoor Fan turning OFF and Compressor turning OFF when set temp is achieved.

Fan Mode:
Press OFF key to put unit in standby mode. Display will show OF. Press constant Fan key to Turn ON Fan Mode. Fan mode LED will glow, and Fan speed will be Low, but user can change fan speed from Speed key on display or Transmitter. Display will show Room temperature during Fan mode. User cannot define any set point.

Cool Mode:
Press Cool button from display or Mode button from Transmitter when unit is in standby or running in another mode. When the unit is running in cool mode, the user can select the desired temperature by pressing the up/down button. If the selected temperature is below the current room temperature, the compressor will start after a time delay of 3 minutes. The Cool LED will blink during this waiting period to indicate that the compressor is about to turn on. The user can initially bypass this waiting period by enabling Turbo function. The user can select the indoor fan speed as Low, Med, High, or Auto.

Heat Mode:
Press the Heat button from display or Mode button from Transmitter when unit is in standby or running in another mode. When the unit is running in heat mode, the user can select the desired temperature by pressing the up/down button. If the selected temperature is above the current room temperature, the heating functionality will start.
For AE models, electric heater is used to add heat to the room. The fan speed will remain at High. Unit will show EH when changing Fan speed.
For AH models, heat pump and electric heater will be switched on and off automatically based on the outside ambient temperatures. While in heat pump mode, the user can select the indoor fan speed, compressor will start after a time delay of 3 minutes. The Heat LED will blink during this waiting period to indicate that the compressor is about to turn on. The user can initially bypass this waiting period by enabling turbo.

Dry Mode:
Press the Dry button from display or Mode button from Transmitter when unit is in standby or running in another mode. In this mode, the air conditioner will generally function as a dehumidifier. Since the conditioned space is a closed or sealed area, some degree of cooling will occur. User can change the set temp and Fan speed in this mode.

Freeze Protection mode:
Freeze Protection mode will turn on when the room ambient temperature falls below selected temperature in profile-08 (Default 40°F) to protect against freezing. Unit will maintain the room temperature at 60°F and run continuously. During this time IDU FAN will be ON as per the setting selected in Profile-07.

Quick Warm up:
When delta between room temp and set point in heating mode is more than selected temperature in Profile-11 (Default 4°F), Electric Heater will turn on instantly instead of heat pump to achieve set temperature quickly. When set temperature is achieved, Heater will turn off and the unit will resume using the heat pump, subject to availability, to maintain the setpoint.
(Refer to Profile Configuration table for details on Profiles)

Air Directional Louvers:

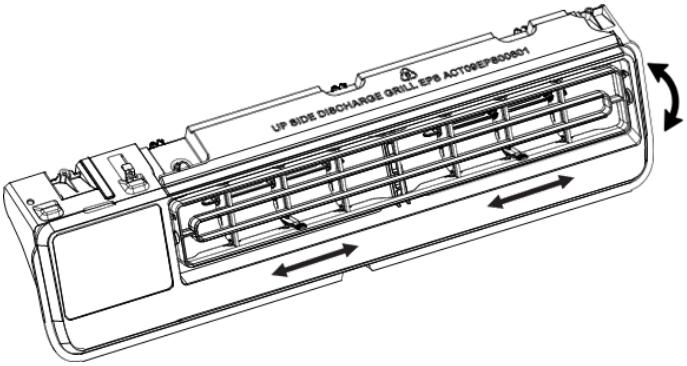

The air conditioner unit has adjustable louvers that allows the user to adjust the direction of airflow as required. Move the handles on the unit from side to side till the desired left/right direction airflow is achieved.
Rotate the louver side to adjust the airflow in up/down direction. Louver is inclined at angle of 27°, which can be adjusted to ± 7°.

NOTE: To get the optimal performance from the unit, make sure there are no obstacles in the air suction/delivery of the unit.

Normal Sounds:

Trickling Sound

Droplets of water hitting condenser during normal operation may cause a trickling sound.

Vibration

Unit may vibrate and make noise because of poor wall or cutout construction or incorrect installation.

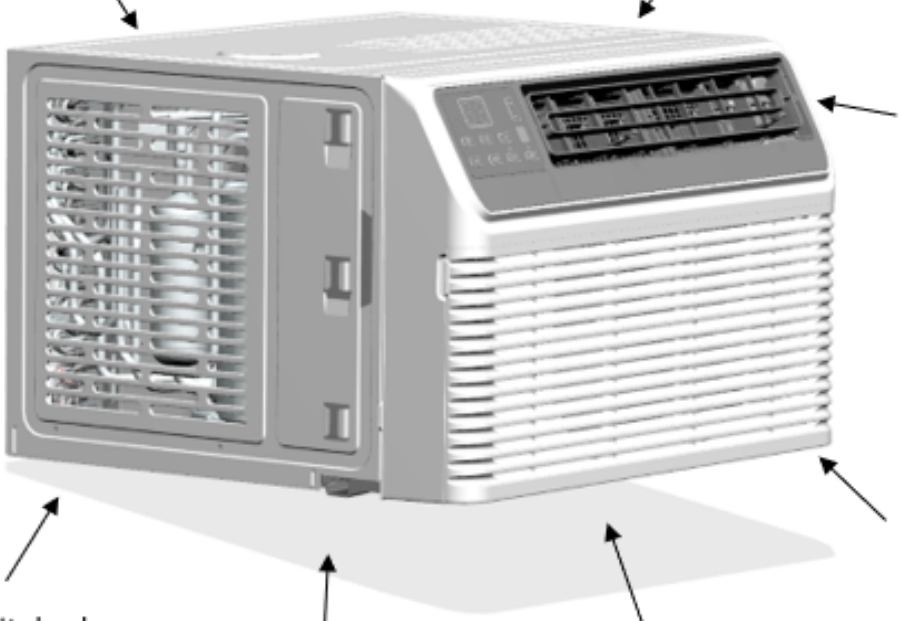

Sound of Leaving Air

In front of the unit, you may hear air coming out of the unit.

Sound of Rushing Air

In front of the unit, you may hear rushing air being moved inside the unit.

High Pitched Sound

High efficiency compressor may have a high-pitched sound during normal operation unit.

Clicking Sound

The controller may have a clicking sound during normal operation of the unit.

Gurgle / Hiss

Gurgling or hissing noises may be heard due to refrigerant flowing through evaporator during normal operation.

INSTALLATION INSTRUCTIONS

WARNING

READ THESE INSTRUCTIONS COMPLETELY AND CAREFULLY.

NOTE: SAVE THESE INSTRUCTIONS.

NOTE: OBSERVE ALL GOVERNING CODES AND ORDINANCES.

WARNING

WE RECOMMEND THAT TWO PEOPLE INSTALL THIS PRODUCT.

WARNING

PROPER INSTALLATION IS THE RESPONSIBILITY OF THE INSTALLER.

WARNING

PRODUCT FAILURE DUE TO IMPROPER INSTALLATION IS NOT COVERED UNDER THE WARRANTY.

WARNING

YOU MUST USE ALL SUPPLIED PARTS AND USE PROPER INSTALLATION PROCEDURES AS DESCRIBED IN THESE INSTRUCTIONS WHEN INSTALLING THIS AIR CONDITIONER.

WARNING

DO NOT, UNDER ANY CIRCUMSTANCES, CUT OR REMOVE THE THIRD (GROUND) PRONG FROM THE POWER CORD.

WARNING

DO NOT CHANGE THE PLUG ON THE POWER CORD OF THE AIR CONDITIONER.

WARNING

ALUMINUM HOUSE WIRING MAY PRESENT SPECIAL PROBLEMS - CONSULT A QUALIFIED ELECTRICIAN.

WARNING

WHEN HANDLING THE UNIT, BE CAREFUL TO AVOID CUTS FROM SHARP METAL EDGES AND ALUMINUM FINS ON FRONT AND REAR COILS.

PARTS SUPPLIED

Check that all parts are included in the parts package.

S.no.	Name	Picture	Qty.
1	Type A (M4 X 10)		10
2	Type B (M4 X 14)		4
3	Type C (M4 X 16)		3
4	Window Lock brackets		2
5	Curtain support bracket for wood		2
6	Curtain support bracket for vinyl		2
7	Adhesive window sash weather seal		1
8	Window sash seal Foam		1
9	Soundproof insulation		2
10	Side curtain		2
11	Top rail (Channel)		1

TOOLS REQUIRED:

Phillips Screwdriver

Level

Pencil

Ruler or tape measure

Drill with 1/8-inch drill bit

Proper PPE

Flathead Screwdriver

Adjustable wrench

Scissors or knife

Window Installation Requirements:
Your air conditioner is designed to install in window with minimum opening shown in Figure A.

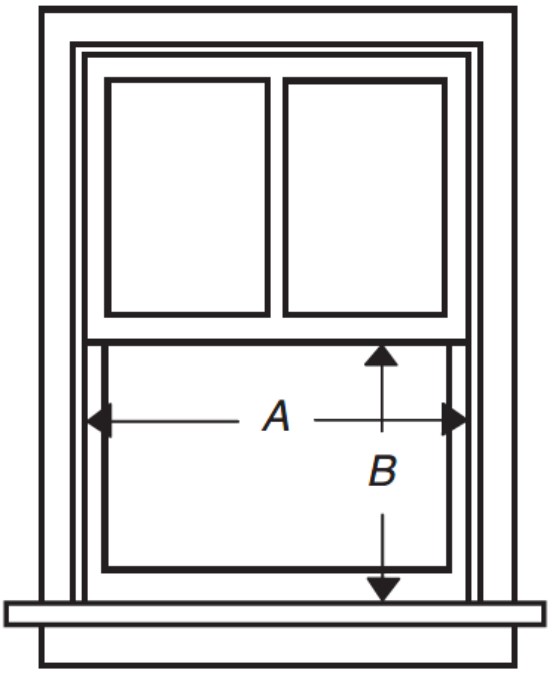

A. 27" min. (68.6 cm)
B. 16¼" min. (41.3 cm)

Figure A

Prepare the Air Conditioner:
Remove the air conditioner from the carton and place on a flat surface. Remove all TOP/BOTTOM packaging EPS, and corner angle boards, as shown in Figure B.

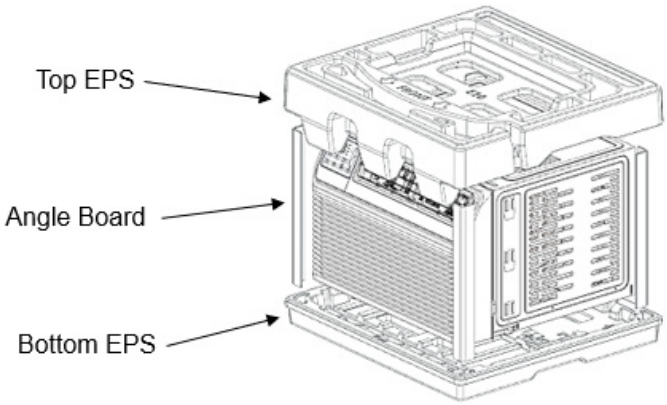

Figure B

Prepare the window:
Remove the release paper from Adhesive Window sash weather seal and paste on the surface of sash to be rested on air conditioner top as shown in Figure C.

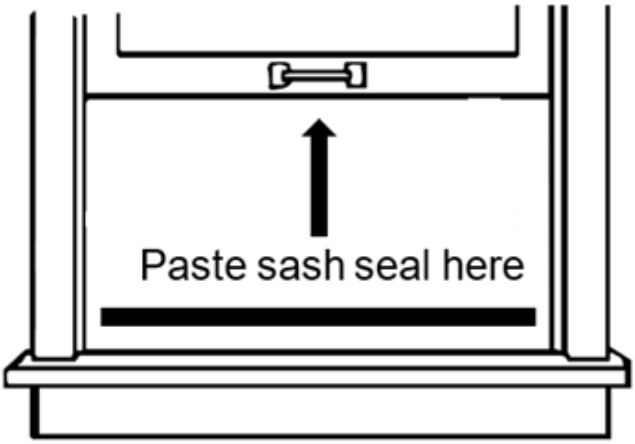

Figure C

Attach Top Rail:
Align the hole in the top rail with those in the top of the unit and secure the top rail to the unit with the Type A- M4 X 10mm screws as shown in Figure D.
Note: For safety reasons, all four (4) screws MUST be securely fastened.

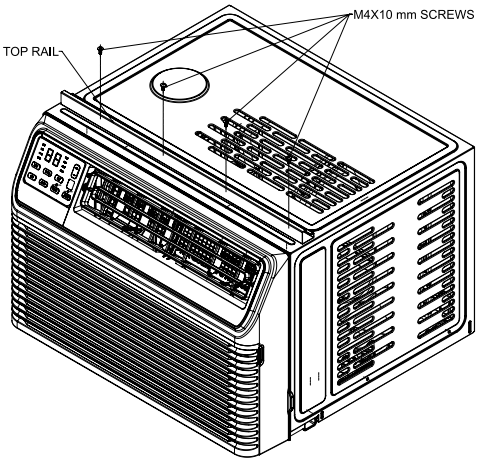

Figure D

Install Side Curtains:
1. Insert top and bottom of left-hand curtain housing in top and bottom rails (guides) on air conditioner as shown in Figure E:

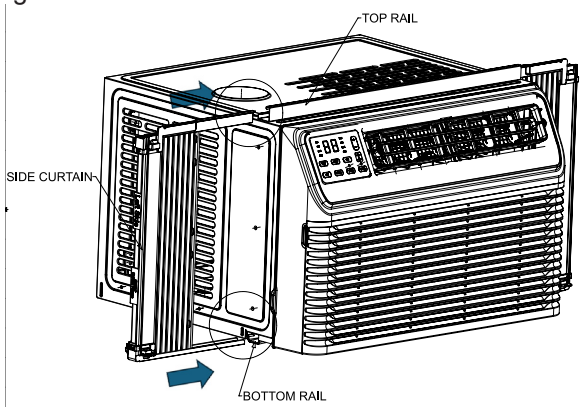

Figure E

2. Extend the curtain outward and attach it to the air conditioner using three Type A- M4 X 10mm screws starting with middle hole, then top and bottom holes as shown in Figure F.

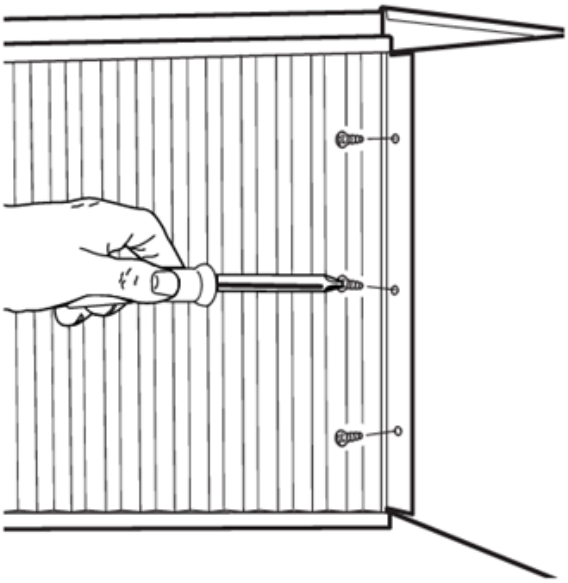

Figure F

3. Slide curtain housing into Rails (guides) as far as it will go.
4. Repeat above steps for right-hand curtain.

Install the Air Conditioner in window:
NOTE: Handle air conditioner gently
The location where the power cord exists the air conditioner should be no more than 4 ft from a grounded 3 prong outlet.

Do not block the louvers on the front panel.

Do not block the louvers on the outside of the air conditioner.

1. Keep a firm grip on the air conditioner, carefully place the unit into the window opening so the bottom rail of the air conditioner frame is against the window sill as shown in figure g. Carefully close the window behind the top rail of the unit.
2. Check the air conditioner Is tilted by ½ bubble on carpenters level to the outside.

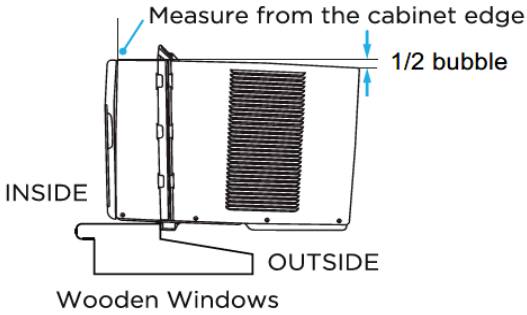

Figure G

Attach Side Curtains to Window Frame

1. Extend the left side curtain panels out against the window frame. Use a 1/8 inch drill bit to drill one starter hole through the hole in the curtain housing and into the lower window sash and one starter hole through threaded hole in bottom of curtain and in to Inner sill.
2. Insert one of the Type C- M4 X 16 mm screw through hole and into lower window sash. Add Curtain support bracket on curtain frame at corner. Insert one of the Type B - M4 X 14 mm screw through curtain support bracket and into inner sill using a screw driver as shown in figure H.
3. Repeat for right-hand curtain.

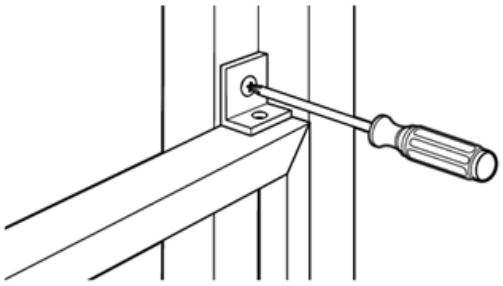

Figure H

Seal and Secure window

Insert Window sash seal foam behind the top of the lower window sash and against the glass of the upper window as shown in Figure J.

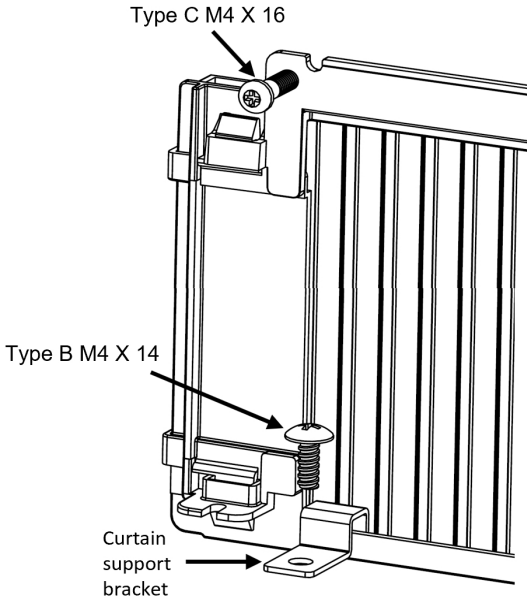

Figure I

Place window-lock bracket on top of lower window and against upper window sash.
Use a 1/8 inch drill bit to drill a starter hole through the hole in the bracket and into the window sash.
Attach window-lock bracket to window sash with Type B-M4 X 14mm screw to secure window in place as shown in Figure I.

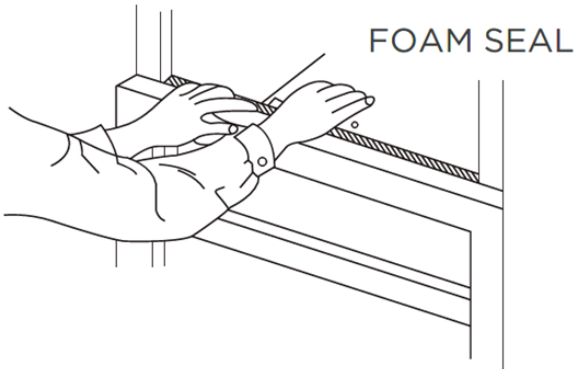

Figure J

Insert a Type C - M4 X 16 mm screw through the center through hole in top rail and into the lower window sash as shown in figure K.

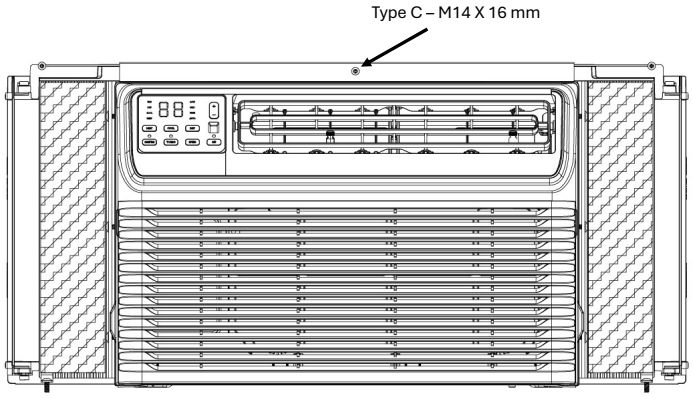

Figure K

Cut soundproof insulation according to curtain size and paste as shown in figure L.

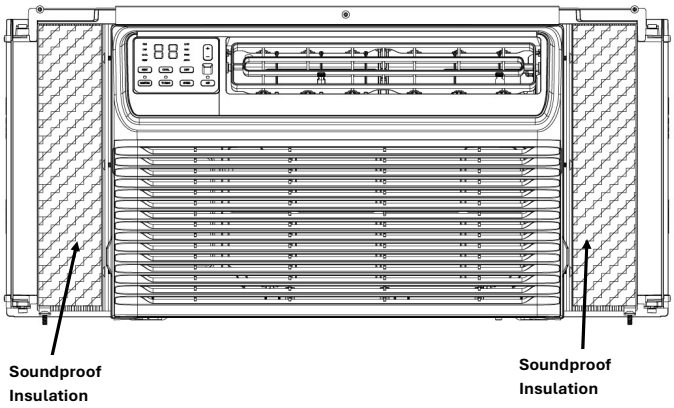

Figure L

- After installation plug-in the power cord to the respective socket.
- Min. Distance between the following sides of outdoor unit and adjacent structure, mm:

Front Side	**510**	**Left Side**	**300**
Rear Side	**510**	**Right Side**	**300**
Top Side	**1000**	**Bottom Side**	**750**

Storm Window adjustments:

A storm window frame prevents the air conditioner from tilting outward and draining properly. To fix this, add wood as shown in Figure M, or remove the storm window before installing the air conditioner. If the storm window frame must remain, ensure the drain holes or slots are not caulked or painted shut, as accumulated rainwater or condensation must be able to drain out.

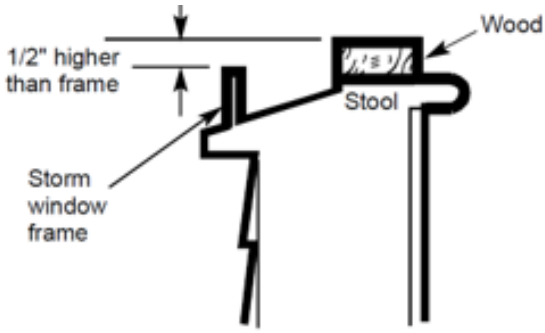

Figure M

Attach a 2” wide wood piece to the stool, long enough to fit the window frame. The wood should be thick enough to raise the stool by 1/2” above the storm window frame. Secure it with nails or screws provided by the installer.

Operate current device/Power Cord:

The power supply cord contains a current device that senses damage to the power cord.
Test your power supply cord as follows:

1. Plug in the air conditioner.
2. The power supply cord will have TWO buttons on the plug head. Press the TEST button. You will notice a click as the RESET button pops out.
3. Press the RESET button. Again, you will notice a click as the button engages.
4. The power supply cord is now supplying electricity to the unit. (On some products this is also indicated by a light on the plug head.)

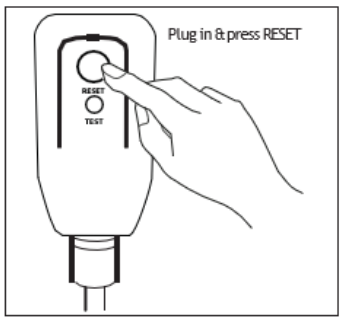

NOTE: Do not use this device to turn the unit on or off. Always make sure the RESET button is pushed in for correct operation.

NOTE: The power cord must be replaced if it fails to reset when either the TEST button is pushed, or it cannot be reset. Please contact customer service.

NOTE: If power supply cord is damaged, it cannot be repaired. It MUST be replaced with a new cord. Please contact Customer Service.

Plug Detail:

S.NO.	Model NO	Rating	Plug Details
1	AE093J35AA	20A/240V	NEMA 6-20P
2	AE123J35AA		
3	AH093J35AA		
4	AH123J35AA		

Thermostat Connection Instructions and Operation:

STEP 1: Remove the front cover by pulling from side tabs forward and upward as shown in Figure N.

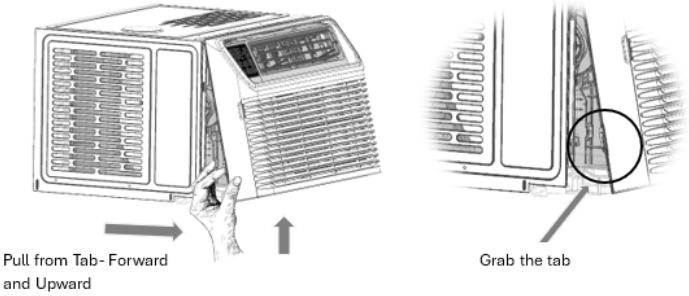

Figure N

STEP 2: Open the Top cover of Conversion board enclosure as per Figure O.

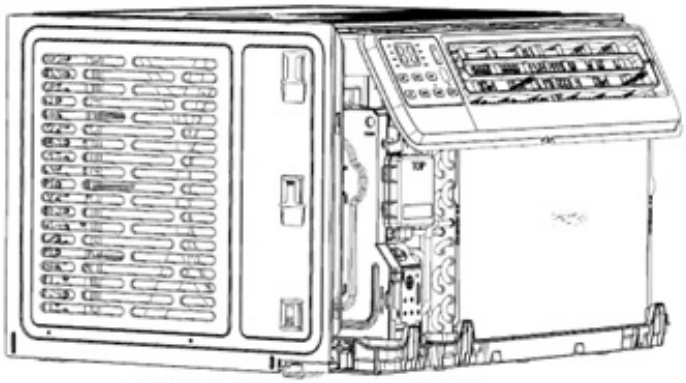

Figure O

STEP 3: Connect the thermostat wires to the connector as per Figure P.

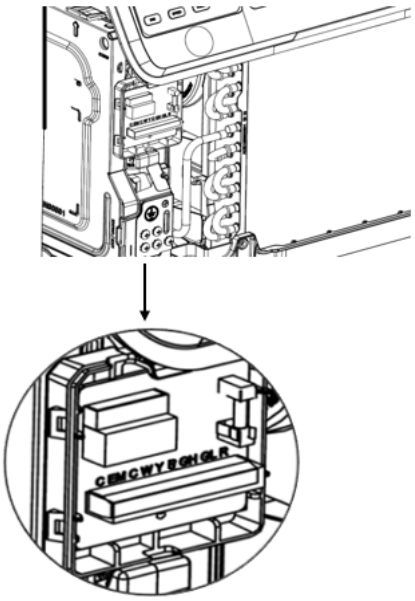

Figure P

Thermostat Operation:

This mode can be activated/deactivated in configuration menu at profile No.13.

1. The display will show “Et” while this mode is activated.
2. The unit will work as per the following logics when External thermostat mode is active:
   - The Indoor Fan speed, either Low or High, will be determined by the external thermostat in all modes.
   - Indoor motor RPM will be as per below Table:

Model	Low Speed	High Speed
9K 230V	1350	1450
12K 1230V	1350	1600

   - In cool mode, the external thermostat will decide when to turn on/off comp based on set temp and ambient temp (ambient temp will be sensed by the external thermostat). Indoor speed can be selected by the user from the thermostat.
   - In heat mode, external thermostat will send a signal to turn on/off the heat based on the set temp and ambient temp. Indoor speed can be selected by user from the thermostat.
   - If any error is observed the controller display will cycle between “Et” and respective error codes.
   - H1, H2, H3, H4 and H9 errors conditions are still monitored when using a Wired Thermostat configuration.

Pin Description at Thermostat:

- B: HP reverse valve
- R: 24V IN
- Y: COMPRESSOR
- W: HEATER
- GH: Indoor Fan High SPEED
- GL: Indoor Fan Low SPEED (During Heater mode GL will ultimately be GH)
- C: 24V COMMON
- EM: Energy Management

EM Energy management input (Front desk control): Controller can handle a switch signal from remote energy management input, called EM signal or front desk control. Input must be 24VAC. If the system receives a 24VAC signal, it will turn off; otherwise, the unit runs in normal control.

CARE AND CLEANING

CAUTION

Clean your air conditioner occasionally to keep it looking new. Be sure to unplug the unit before cleaning to prevent shock or fire hazards.

Air Filter Cleaning

The air filter should be checked at least once every two weeks to see if cleaning is necessary. Trapped particles in the filter can build up and can cause accumulation of frost or reduction in unit performance.

Steps to Clean the filter:

- Remove the filter cover (fascia) from the unit. To remove the filter cover, grab the filter cover from both sides and pull towards you. The filter cover will be hinged at the bottom side and will open revealing the filter inside.
- Grasp the filter and pull out the filter.
- Wash the filter using liquid dishwashing detergent and warm water. Rinse the filter thoroughly after cleaning.
- Gently shake the excess water from the filter. Be sure, the filter is thoroughly dry before reinstalling in the unit.
- You may also vacuum the filter instead of washing it depending on the build-up on the filter.

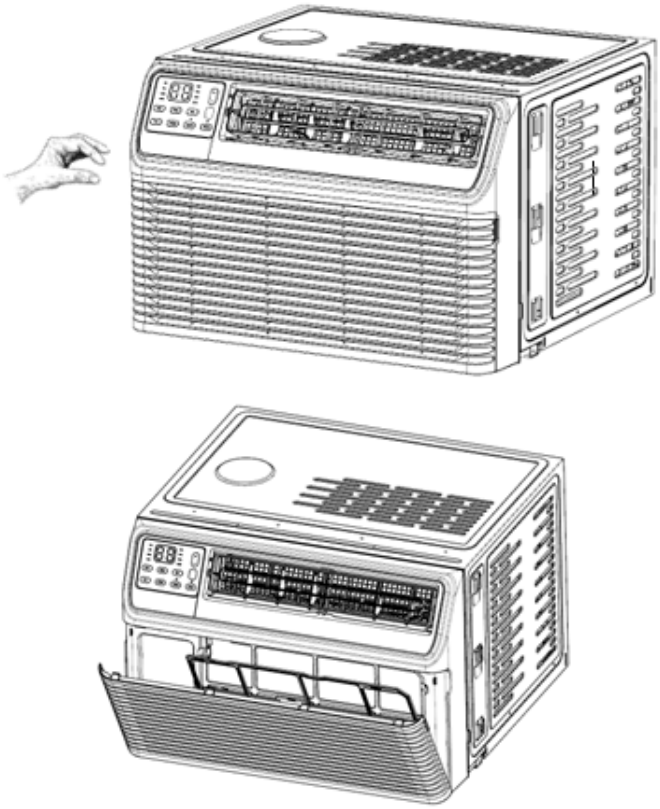

NOTE: Never use hot water over 40°C (104°F) to clean the air filter. Never attempt to operate the unit without the air filter. Never use any chemical to clean the filter.

Fresh Air Filter Cleaning:

The fresh air filter should be checked at least once every two weeks to see if cleaning is necessary. Trapped particles in the filter can build up and can cause reduction of fresh air moving inside the room.

Steps to Clean the fresh air filter:

- Turn off the power supply to the unit and unplug the power socket from mains supply.
- Remove unit cabinet.
- Grasp the filter and pull out the filter.
- Wash the filter using liquid dishwashing detergent and warm water. Rinse the filter thoroughly after cleaning.
- Gently shake the excess water from the filter.
- Be sure the filter is thoroughly dry before reinstalling in the unit.
- You may also vacuum the filter instead of washing it depending on the buildup on the filter.
- Fresh air filter is optional (Closed damper is pre-fitted.)
- Fresh Air filter also supplied with accessories

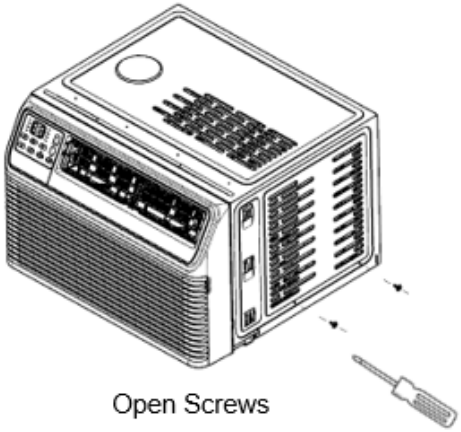

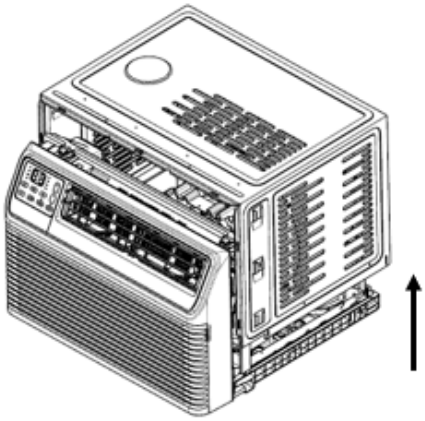

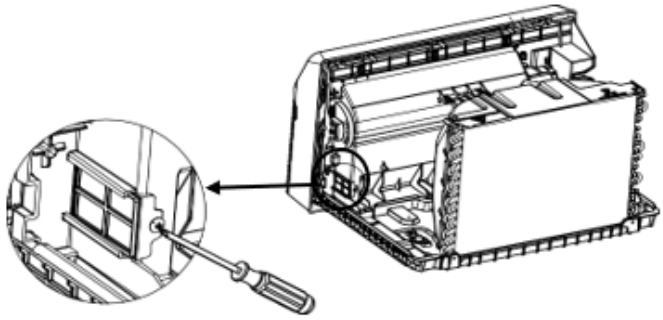

Outdoor Coil and Basepan Cleaning:
Coil on the outdoor side of unit and basepan should be checked regularly. Unit needs to be removed to inspect dirt build-up that will occur on the inside of the coil and base pan. If clogged with dirt and soot, the coil should be professionally cleaned. If there is dirt build-up/Algae built-up in basepan, the basepan needs to cleaned. Clean Basepan and outdoor coil regularly.

NOTE: Never use a high-pressure spray on coil

Cabinet cleaning
The cabinet and the front may be dusted with an oil-free cloth or washed with a cloth dampened in a solution of warm water and mild liquid dish washing detergent. Rinse throughly and wipe dry.
Never use harsh cleaners, wax or polish on the cabinet front.
Be sure to wring excess water from the cloth before wiping around the controls. Excess water in or around the controls will cause damage to the air conditioner.

Annual Inspection
It is suggested that your unit be inspected by your dealer or servicer once a year. It is advisable to have the outer case removed and the unit thoroughly cleaned.

REMOTE CONTROLLER SPECIFICATIONS

Model	**LX196N**
Rated Voltage	**3.0V (Lithium battery CR2025)**
Lowest Voltage of CPU emitting signal	**2.4V**
Signal Receiving Range	**22.9ft (7m)**
Environment	**-5°C~60°C (23°F~140°F)**

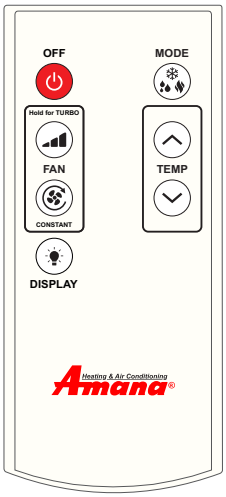

How to Use the Buttons?
OFF button:
Press the OFF button when the unit is running in any mode to turn off the unit or to put in standby.
MODE button:
Press the mode button to switch between different modes i.e. Cool, dry, heat.
Fan button:
Press the button to change the Fan speed. Low, medium, high, auto.
Press & Hold speed button to enable/disable turbo.
Constant:
Press constant button to enable/disable constant fan feature.
When enabled, Indoor fan will keep running even compressor is off after achieving set point.
When disabled, Indoor fan will turn OFF with compressor after set point is achieved.
Temperature set button:
Press the UP button to increase the set temperature.
Press the Down button to decrease the set temperature.
Display button:
The display button will turn off/on the LED showing temperature on display panel of machine. Press and hold the display key for 5 sec to see room temperature.

NOTE: During operation, point the remote-control signal sender at the receiving window on indoor unit.
The distance between the signal sender and receiving window should be no more than 7m, and there should be no obstacles between them.
Signals may be interfered easily in the room where there is fluorescent lamp or wireless telephone: remote control should be close to indoor unit during operation.
Replace new batteries of the same model when replacement is required. When you don't use remote controller for a long time, please take out the batteries.
If the command is missing on the remote controller, please replace the batteries.

TROUBLESHOOTING TIPS

Before calling for service, review this list. It may save you time and expense. This list includes common occurrences that are not the result of defective workmanship or materials in this appliance.

Problem	Possible Solutions
Air conditioner does not start.	Wall plug disconnected. Push plug firmly into wall outlet.
	Circuit breaker tripped. Reset circuit breaker.
	Check if the light on the plug is on. If it is off, press the RESET button.
	Power is OFF. Turn power ON.
	Unit turned off and then on quickly. Turn unit off and wait 3 minutes before restarting.
	When “EM” pin has signal and energy management is activated
Air from unit does not feel cold enough.	Room temperature below 60°F (16°C). Cooling may not occur until room temperature rises above 60°F (16°C).
	The temperature sensor behind the air filter is touching the cold coil. Try to move it so it does not contact the cold coil.
	Reset to a lower temperature.
	Compressor shut-off by changing modes. Wait approximately 3 minutes and listen for compressor to restart when set in the COOL mode.
	Check for potential obstructions blocking the outdoor intake/exhaust. Clear any obstructions.
Air conditioner cooling, but room is too warm -NO ice forming on cooling coil behind air filter.	Outdoor temperature below 64°F (18°C). To defrost the coil, set to FAN ONLY mode.
	The air filter may be dirty. Clean filter. Refer to the Care and Cleaning section. To defrost, set to FAN ONLY mode.
	The thermostat is set too cold for night-time cooling. To defrost the coil, set it to FAN ONLY mode. Then, set temperature to a higher setting.
	Dirty or restricted air filter. Clean filter. Refer to the Care and Cleaning section. To defrost, set to FAN ONLY mode.
	Temperature is set too high, set temperature to a lower setting.
	Air directional louvers positioned improperly. Position louvers for better air distribution.
	The front of unit is blocked by drapes, blinds, furniture, etc. - restricts air distribution. Clear obstruction in front of unit.
	Any open doors, windows, or registers may allow cold air to escape. Close any doors, windows, or registers.
Air conditioner turns on and off rapidly.	Dirty air filter- air restricted. Clean air filter.
	Outside temperature extremely hot. Set FAN speed to a higher setting to bring air past cooling coils more frequently.
	Check for potential obstructions blocking the outdoor intake/exhaust. Clear any obstructions.
Noise when unit is cooling.	Air movement sound. This is normal. If too loud, set to a slower FAN setting.
	Window vibration - poor installation. Refer to installation instructions or check with installer.
Water dripping INSIDE when unit is cooling.	Improper installation. Tilt air conditioner slightly to the outside to allow water drainage. Refer to installation instructions - check with installer.
Water dripping OUTSIDE when unit is cooling.	Unit removing large quantity of moisture from humid room. This is normal during excessively humid days.
Remote sensing deactivating prematurely (some models).	Remote control is not located within range. Place remote control within 22.9 feet & 120°, radius of the front of the unit, and pointed in the general direction of the air conditioner unit.
	Remote control signal obstructed. Remove obstruction.
Room too cold.	Temperature setting too low. Increase temperature setting.
Noise when unit starts.	A “DA-DA” sound may occur for thirty seconds when the unit is turned on due to the compressor starting. It is normal.

WIRING DIAGRAM:

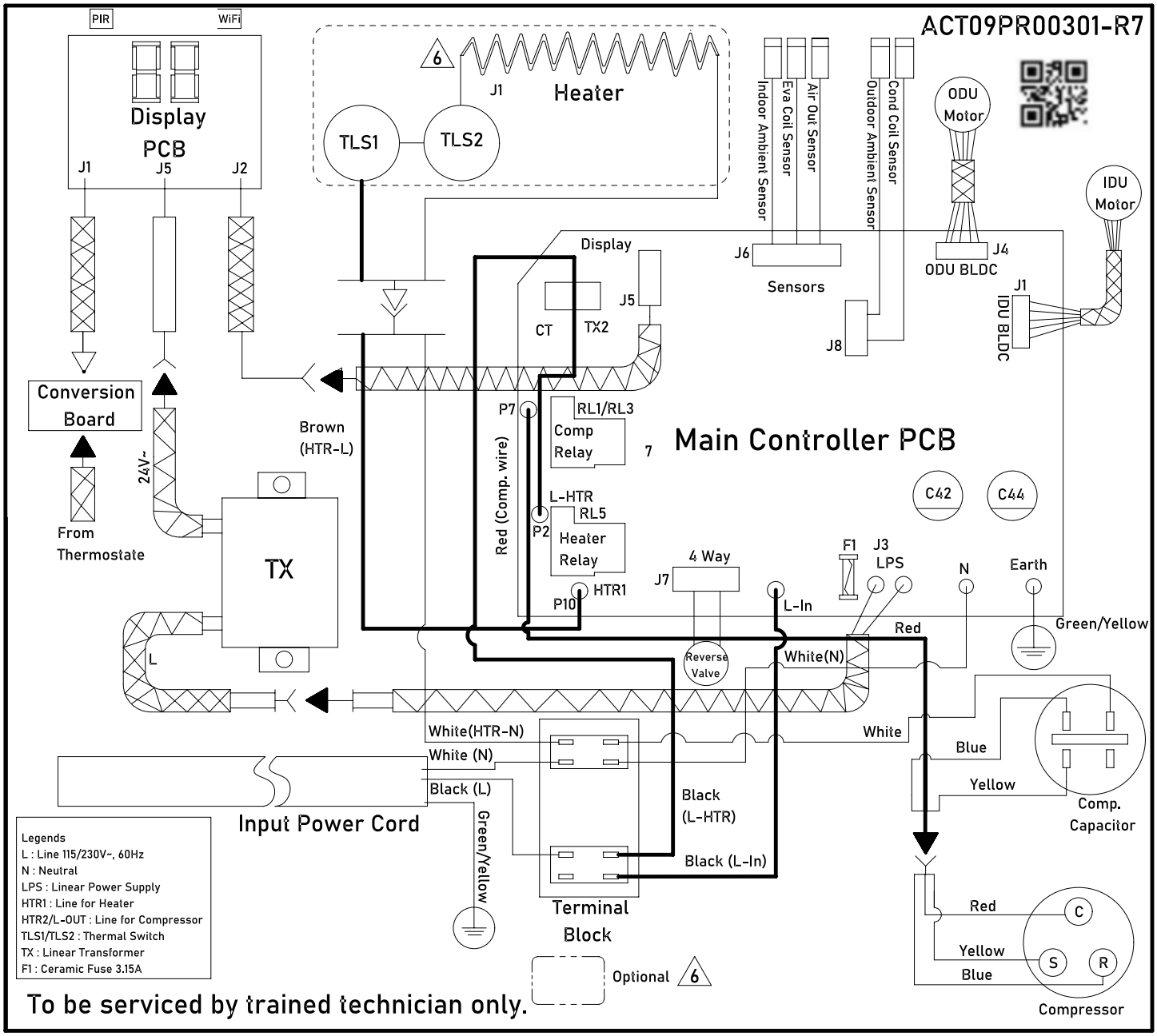

NOTE: The wiring diagram may vary for different model. Please refer to wiring diagram on the unit you have purchased. Please refer to Name plate for accurate power supply information to use for your purchased unit.

Error Code Description and Suggested Corrective Actions:

Error Code	Status	Corrective Action
FT	Multiple dip switches selected (all off, all on, or any two on/off)	Turn on only one dip switch according to the model.
E1	Room ambient air temperature sensor is shorted or open	Replace or reconnect the sensor.
E2	Evaporator coil sensor temperature is shorted or open	Replace or reconnect the sensor.
E3	Air out sensor is shorted or open	Replace or reconnect the sensor.
E4	Condenser coil sensor is shorted or open	Replace or reconnect the sensor.
E5	Outdoor ambient air sensor is shorted or open	Replace or reconnect the sensor.
EH	Changing fan speed while electric heater is running	Only turbo and high speed are allowed.
LC	Ta – Tc ≤ 20°C when checked three times after refrigeration cycle starts	Check sensor position, replace or reconnect the sensor, recharge refrigerant, check compressor.
H1	Heater element Fault (open circuit)	Check heater element for fault, or relay not energized.
H2	Heater element continuously on without logic/heater OCP	Check relay contact for weld/stuck or drive IC's pin for pull-up.
H3	Condenser coil sensor temperature below 68°F (20°C) in cool mode	Check relay contact for weld/stuck or drive IC's pin for pull-up.
H4	Condenser coil sensor temperature above 68°F (20°C) in heat mode	Check relay contact for weld/stuck or drive IC's pin for pull-up.
H5	Indoor BLDC motor fault	Replace or reconnect the motor.
H6	Evaporator coil sensor temperature above 68°F (20°C) in cool mode	Check relay contact for weld/stuck or drive IC's pin for pull-up.
H7	Evaporator coil sensor temperature below 68°F (20°C) in heat mode	Check relay contact for weld/stuck or drive IC's pin for pull-up.
H8	Outdoor BLDC motor fault	Replace or reconnect the motor.
H9	Compressor over current protection	Turn machine on/off to verify compressor fault.
dF	Defrost error	Check sensor position, replace sensor, check IDU motor RPM, or check gas charge.
CF	Configuration menu indication	To exit CF mode press and hold Fan button

Configuration Menu

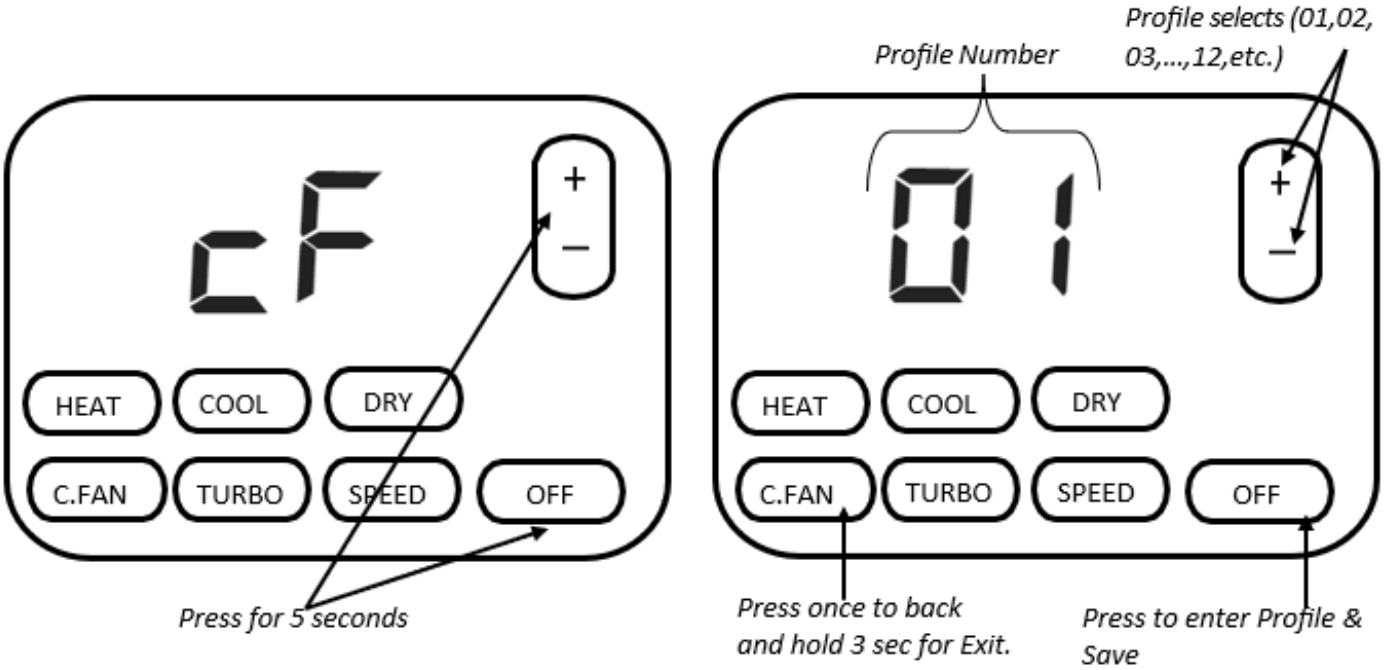

ENTER (Configuration Menu)	Press the “OFF” button and put the machine in Standby Mode. Press and Hold “OFF” AND “TEMP +” button simultaneously for 5 seconds. “OFF LED” will start blinking and display will show “cF” for 2 seconds and then PROFILE “01” will be displayed by default.
Exploring Profiles	Pess “TEMP +/-” button to move up / Down in Profiles. Press “OFF” Button to enter in any Profile. There are a total of 13 Profiles. Press “OFF” button to save your selected Option within the profile See Profile Configuration table for detail.
Exit	Press “Constant fan” button once to exit from profile. Press and hold the “Constant fan” button for 3 seconds to exit from the configuration menu.

Profile Configuration Table			
Profile number	**Profile description**	**Option code**	**Option code description**
01	Custom fan	F1	Follows touchpad selection low, medium, high, turbo.
		F2	Follows touchpad selection and revert to "auto" after selected time in “profile 02”.
		F3	Fan runs (24/7/365) (fan speed will be fixed at high and run continuously, user will not be able to change fan speed)
		F4	Follows touchpad selection and revert to "high" after selected time in “profile 02”.
02	Idle time for custom fan	1 - 32, 18*	1 Hour to 32 hours, default 18* hours. (If user presses any fan speed, idle time will reset.)
03	Temperature range (min. Limit) for cooling	60 - 80, 60*	60°- 80°F, default 60* °f. (User can customize set temperature range for cooling mode by selecting minimum set temperature between 60°- 80°f.)
04	Temperature range (max. Limit) for heating	68 - 90, 80*	68°- 90°F, default 80* °f. (User can customize set temperature range for heating mode by selecting maximum set temperature between 68°- 90°f.)
05	Temperature delta for dry mode to turn off	3 - 8, 3*	3°- 8°F, default 3* °f.
06	Temperature unit (english / metric)	F*	°F: fahrenheit scale* (default)
		C	°C: celsius scale
07	Freeze protection mode^	P0	Freeze protection off
		P1*	Freeze protection on, low fan speed (default)
		P2	Freeze protection on, high fan speed
08	Activation temperature for freeze protection	25 - 55, 40*	25°- 55°F, default 40* °f
09	Temperature delta for high speed in auto fan for cooling	5 - 9, 5*	5°F - 9°f, default 5* °f
10	Temperature delta for high speed in auto fan for heating	6 - 8, 6*	6°F - 8°f, default 6* °f
11	Quick warm up	4 - 8, 4*	4°F - 8°f, default 4* °f
		0	Off
12	Temperature sensor offset	-9 - 9, 0*	(-9°F) to (+9°f), default 0* °f (to compensate for room temperature sensor bias)
13	User interface	Et	External wired thermostat
		Na*	Default keypad*

“*” indicates factory default settings in the unit.
“^”If any fault occurs during Freeze protection operation or room temperature reaches 70°F then this mode will be disabled and will restart when temperature goes below the activation temperature for freeze protection.

THIS PAGE IS INTENTIONALLY LEFT BLANK

CUSTOMER FEEDBACK
Daikin Comfort Technologies is very interested in all product comments.
Please fill out the feedback form on the following link:
https://daikincomfort.com/contact-us
You can also scan the QR code on the right to be directed to the feedback page.

19001 Kermier Rd., Waller, TX 77484 • www.amana-ptac.com
© 2026 Daikin Comfort Technologies Manufacturing, Inc.
AMANA HEATING & AIR CONDITIONING is a registered trademark of Whirlpool Corporation or its related companies and is used under license.
All rights reserved.