INSTALLATION & OPERATING INSTRUCTIONS

LPM-03B CONVERSION KIT 2-STAGE FURNACE

Use the following parts list to ensure that all parts listed below are present and in an undamaged condition. IF ANY DOUBT EXISTS ABOUT THE CONDITIONS OF ANY COMPONENT WITHIN THIS KIT, DO NOT USE THIS KIT AND CONTACT YOUR SUPPLIER FOR A NEW KIT.

PARTS LIST		
Description	**Part Number**	**Qty.**
Installation Instructions	IO-590D	1
Conversion Label	B14933-151	1
Burner Orifices, 1.25	B40899-125	6 (1 Pack)
LP Gas Valve	B12826-18	1
Burner Orifices, 55	B4089955	6 (1 Pack)

With the exception of the natural gas burner orifices and the natural gas valve, all of the fasteners and other components removed to perform this conversion are to be reused. Any component found to be damaged due to this conversion must be replaced with factory authorized replacement parts before this furnace can be put into operation.

This furnace is equipped for a two stage heating operation. The LP gas valve is factory pre-set with the first stage operating at 5" W.C. manifold pressure and the second stage is set at 10" W.C. manifold pressure. The accuracy of these pressures must be checked as shown in steps 24 and 25 of these instructions.

The gas valve is equipped with a 3 pin polarized plug which prevents this wiring from being installed incorrectly.

CAUTION

LABEL ALL WIRES PRIOR TO DISCONNECTION WHEN SERVICING CONTROLS. WIRING ERRORS CAN CAUSE IMPROPER AND DANGEROUS OPERATION. VERIFY PROPER OPERATION AFTER SERVICING.

If the installation is equipped with a gas meter capable of measuring gas flow in cubic feet the following formula is to be used to verify the appliance input:

INPUT = (HEATING VALUE OF FUEL x 3600) / TIME IN SECONDS PER CUBIC FT.

The heating value of the fuel is to be obtained from the fuel supplier. An input range of +/- 2% is acceptable.

NOTE: TO OBTAIN AN ACCURATE MEASUREMENT, ALL OTHER GAS APPLIANCES MUST BE TURNED OFF EXCEPT FOR PILOTS.

The following tools and supplies are required:

- Pipe Wrenches. These wrenches are to be suitably sized to handle the supply piping and its ground union joint.
- 1/2" open or closed end wrench to remove the natural gas orifices.
- 7/16" open or closed end wrench. Do not use an adjustable wrench when installing the L.P. burner orifices.
- 5/16" nut driver.
- 3/16" Allen wrench. This wrench is required to remove gas valve inlet and outlet plugs.
- Water Column Manometers. Each manometer must be capable of reading a range between 0 and 20 inches.
- Pipe Thread Compound. Pipe thread compound must be listed as appropriate material for LP gas. Soap solution and application brush. **NEVER USE A NAKED FLAME WHEN CHECKING FOR GAS LEAKS**

PLEASE READ AND FOLLOW THESE INSTRUCTIONS CAREFULLY.

RECOGNIZE THIS SYMBOL AS A SAFETY PRECAUTION.

ATTENTION SERVICE PERSONNEL

As a professional servicer, you have an obligation to know the product better than the customer. This includes all safety precautions and related items.

Prior to actual installation, thoroughly familiarize yourself with these instructions. Pay special attention to all safety warnings. Often during installation or repair, it is possible to place yourself in a position which is more hazardous than when the unit is in operation.

Remember, it is your responsibility to install the product safely and to know it well enough to be able to instruct a customer in its safe use.

Safety is a matter of common sense...a matter of thinking before acting. Most dealers have a list of specific good safety practices...follow them.

The precautions listed in these instructions should not supersede existing practices, but should be considered as supplemental information.

All information contained herein is subject to change without notice.

Goodman Manufacturing Company, L.P.
2550 North Loop West, Suite 400, Houston, TX 77092
www.goodmanmfg.com
© 2003-2005 Goodman Manufacturing Company, L.P.

WARNING

THIS CONVERSION KIT SHALL BE INSTALLED BY A QUALIFIED SERVICE AGENCY IN ACCORDANCE WITH THESE INSTRUCTIONS AND ALL APPLICABLE CODES AND REQUIREMENTS OF THE AUTHORITY HAVING JURISDICTION. FAILURE TO FOLLOW THESE INSTRUCTIONS EXPLICITLY MAY RESULT IN A FIRE, EXPLOSION, OR PRODUCTION OF CARBON MONOXIDE WHICH MAY CAUSE PROPERTY DAMAGE, PERSONAL INJURY OR DEATH. THE PARTY PERFORMING THIS WORK ASSUMES RESPONSIBILITY FOR THE PROPER CONVERSION OF THIS APPLIANCE WITH THIS KIT.

WARNING

DISCONNECT ALL ELECTRICAL POWER BEFORE INSTALLING. FAILURE TO FOLLOW THIS WARNING MAY RESULT IN PERSONAL INJURY OR DEATH DUE TO ELECTRICAL SHOCK.

CAUTION

ALL GAS SUPPLY PIPING MUST BE IN ACCORDANCE WITH THE NATIONAL FUEL GAS CODE (ANSI Z223.1), IN CANADA (CAN/CGA-B149.2-M91), AND ANY LOCAL, STATE, OR PROVINCIAL CODES WHICH MAY COVER THIS INSTALLATION.

CONVERSION FROM NATURAL GAS TO PROPANE GAS INSTRUCTIONS

1. Prior to performing this conversion, refer to the Installation and Operating Instructions supplied with this furnace, the National Fuel Gas Code ANSI Z223.1, in Canada CAN/CGA-B149.2-M91, and local codes to ensure that this appliance is installed correctly and in compliance with these codes and manuals.
2. Shut off the gas supply to the furnace prior to disconnecting the electrical power and proceeding with this conversion.
3. Remove the furnace control access door.
4. Loosen the gas supply ground union joint and remove the gas valve supply line. Use one pipe wrench as a back-up to prevent damage or rotation of any control.
5. Using the 5/16" nut driver, remove the screws which attach the burner box front cover. (Skip this step on some models because they do not have burner box front covers.)
6. Using the 5/16" nut driver, remove the (4) sheet metal screws which fasten the gas manifold to the burner box. Unplug the wiring harness from the gas valve and remove the manifold from the burner box.
7. Using the wrench, remove the natural gas burner orifices from the burner manifold. Discard the natural gas orifices.
8. Determine natural gas firing rate per burner. Divide input rate listed on rating plate by number of burners. Based on firing rate/burner, select correct LP orifice. 20,000 Btu/hr uses 1.25 mm orifice (stamped 125, part number B40899-125), 22,500 Btu/hr uses 55 orifices (stamped 55, part number B40899-55).
9. Remove the LP orifices from this kit and verify that these orifices are stamped. Using the 7/16" wrench, install the LP burner orifices into the burner manifold. Tighten these orifices adequately to prevent leakage. For installations in excess of 2000 feet above sea level, refer to Table 1 for the correct LP burner orifices.
10. Remove NOx screen removal per instructions on page 4.
11. Using a pipe wrench, remove the natural gas valve from the burner manifold. Be sure to use a back-up wrench on the manifold.
12. Apply a liberal quantity of pipe compound to the threaded portion of the burner manifold.

NOTE: PIPE COMPOUND MUST BE RESISTANT TO THE EFFECTS OF LP GAS.

13. Install the LP gas valve supplied with this kit. The direction of flow of the gas is indicated by an arrow stamped on the body of the gas valve. The gas valve is to be tightened onto the burner manifold with a pipe wrench adequately to prevent leakage.

CAUTION

DO NOT OVER TIGHTEN AS IT MAY CAUSE DAMAGE TO THE GAS VALVE.

14. Using a 3/16" Allen wrench, remove both the inlet and outlet pressure plugs from the gas valve. Retain these plugs.
15. Install a barbed hose connector into both the gas valve inlet and outlet pressure ports.

NOTE: THE GAS VALVE PRESSURE PORTS ARE THREADED TO ACCEPT A 1/8" NPT FITTING. DO NOT USE A BARBED HOSE CONNECTOR THAT IS THREADED FOR ANYTHING OTHER THAN 1/8" NPT.

16. Install the burner manifold into the furnace using the (4) screws removed in step 6. Care is to be exercised to ensure that the manifold rubber grommet is engaged correctly into its receiving slot on the burner box (GSU and GSM Models Only). Install the gas valve wiring harness.
17. Connect both the inlet and outlet barb fittings (installed in step 13) to (2) separate manometers. See Figure 2.
18. Apply a liberal quantity of pipe compound to all of the threaded portions of the gas supply piping. Pipe compound must be resistant to the effects of LP gas.
19. Install the gas supply piping and its ground union using a pipe wrench. A second pipe wrench is to be used as a back-up.
20. Turn on the gas supply to the furnace. Leak check all of the supply pipe joints using a soap and water solution. Repair any leaks before continuing.

CAUTION

NEVER CHECK FOR GAS LEAKS WITH AN OPEN FLAME.

21. Turn on the electric supply to the furnace.
22. Adjust the room thermostat to obtain a first stage (W1 only) burner operation.
23. Using a soap and water solution, check for leaks around the gas valve/manifold connection and the burner orifices. Repair any leaks before continuing.

24. Install the burner box front cover removed if removed in Step 5.
25. After the burner is in operation, adjust the gas supply pressure to obtain a pressure range between 11 and 14 inches W.C. supply pressure.
26. With the furnace operating in its low-fire (W1 only) condition, the manifold pressure should be 5" W.C. +/- .3". If necessary, this pressure can be adjusted using the gas valve low pressure adjustment screw located under the screw plug located on top of the gas valve. Clockwise (↻) adjustment increases pressure and counterclockwise (↺) decreases manifold pressure. Install the regulator cover if adjustments were required. See Figure 1. Set manifold pressure to pressure listed for low fire on Furnace Rating Plate.
27. Re-adjust the room thermostat to obtain a second stage call for heat (W2). The manifold pressure for the W2 condition should be 10 to 10.5 inches W.C. Adjustments to this pressure can be made using the high pressure adjustment screw found on the outlet side of the gas valve. Install the regulator cover if adjustments were required. See Figure 1.
28. Using the room thermostat to cycle the appliance observe a minimum of three (3) smooth ignition cycles.
29. Turn off the gas and electrical supply to the furnace.
30. Remove the inlet and outlet barbed hose fittings installed on the gas valve. Install the gas valve inlet and outlet pressure plugs removed in step 12 using pipe joint compound.
31. Apply the conversion label (B14933-151). This label must be attached adjacent to the rating plate.
32. Install the control access panel. Turn on the gas and electrical supplies and adjust the room thermostat to the desired room temperature.

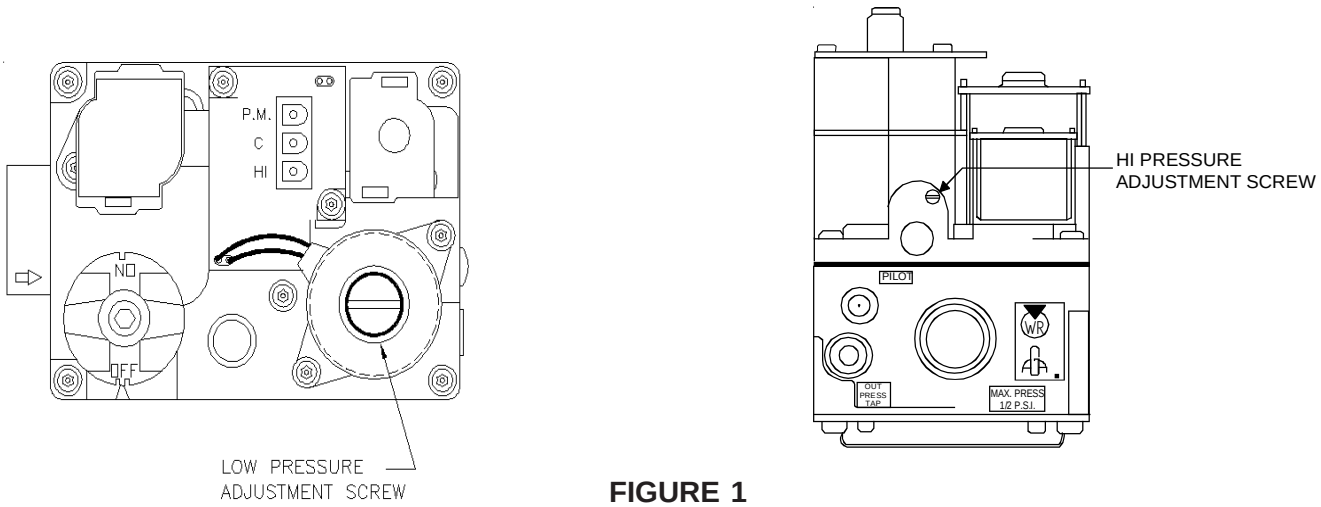

FIGURE 1

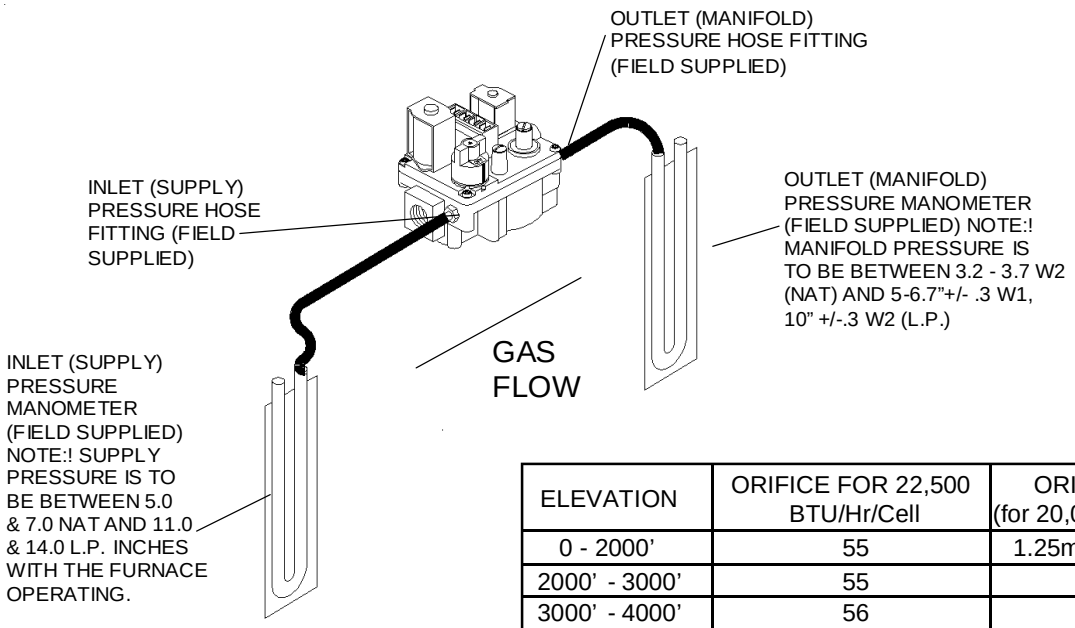

ELEVATION	ORIFICE FOR 22,500 BTU/Hr/Cell	ORIFICE SIZE (for 20,000 Btu/hr/cell)
0 - 2000'	55	1.25mm (supplied)
2000' - 3000'	55	56
3000' - 4000'	56	57
4000' - 5000'	56	57
5000' - 6000'	57	58
6000' - 7000'	58	58

FIGURE 2

NOx SCREEN REMOVAL

WARNING

ALL METAL SCREENS MUST BE REMOVED FROM THE HEAT EXCHANGER TUBES WHEN USING PROPANE GAS. FAILURE TO COMPLY COULD CAUSE SERIOUS PERSONAL INJURY OR DEATH. FAILURE TO COMPLY WITH THIS REQUIREMENT WILL ALSO VOID WARRANTY COVERAGE.

NOTE: To prevent premature heat exchanger failure, follow the instructions below to remove all metal screen inserts from the entrance of heat exchanger tubes during propane conversions. Not all models will have metal screen inserts.

Non-Condensing Furnaces and Package Gas-Electric

1. Remove the screws securing the burner box to the partition panel. Separate burner box from unit.
2. Remove the screw(s) securing the NOx screen retention plate and remove the plate.
3. Remove and discard NOx screens.
4. Reinstall the NOx screen retention plate and burner box.

Quality Makes the Difference!

"All of our systems are designed and manufactured with the same high quality standards regardless of size or efficiency. We have designed these units to significantly reduce the most frequent causes of product failure. They are simple to service and forgiving to operate. We use quality materials and components. Finally, every unit is run tested before it leaves the factory. That's why we know. . . **There's No Better Quality."**

Visit our web site at **www.goodmanmfg.com** for information on:

- Goodman Products
- Warranties
- Customer Services
- Parts
- Contractor Programs and Training
- Financing Options

© 2003-2005 Goodman Manufacturing Company, L.P.