MBVK***H0X** (115 V)

MODULAR BLOWER - COLD CLIMATE INSTALLATION INSTRUCTIONS

© 2024
Daikin Comfort Technologies Manufacturing, L.P.
19001 Kermier Rd., Waller, TX 77484
www.daikincomfort.com - www.goodmanmfg.com - www.amana-hac.com
P/N: IO-462 Date: November 2024

WARNING

ONLY PERSONNEL THAT HAVE BEEN TRAINED TO INSTALL, ADJUST, SERVICE, MAINTENANCE OR REPAIR (HEREINAFTER, "SERVICE") THE EQUIPMENT SPECIFIED IN THIS MANUAL SHOULD SERVICE THE EQUIPMENT.

THIS EQUIPMENT IS NOT INTENDED FOR USE BY PERSONS (INCLUDING CHILDREN) WITH REDUCED PHYSICAL, SENSORY OR MENTAL CAPABILITIES, OR LACK OF EXPERIENCE AND KNOWLEDGE, UNLESS THEY HAVE BEEN GIVEN SUPERVISION OR INSTRUCTION CONCERNING USE OF THE APPLIANCE BY A PERSON RESPONSIBLE FOR THEIR SAFETY.

CHILDREN SHOULD BE SUPERVISED TO ENSURE THAT THEY DO NOT PLAY WITH THE EQUIPMENT.

THE MANUFACTURER WILL NOT BE RESPONSIBLE FOR ANY INJURY OR PROPERTY DAMAGE ARISING FROM IMPROPER SUPERVISION, SERVICE OR SERVICE PROCEDURES. IF YOU SERVICE THIS UNIT, YOU ASSUME RESPONSIBILITY FOR ANY INJURY OR PROPERTY DAMAGE WHICH MAY RESULT. IN ADDITION, IN JURISDICTIONS THAT REQUIRE ONE OR MORE LICENSES TO SERVICE THE EQUIPMENT SPECIFIED IN THIS MANUAL, ONLY LICENSED PERSONNEL SHOULD SERVICE THE EQUIPMENT. IMPROPER SUPERVISION, INSTALLATION, ADJUSTMENT, SERVICING, MAINTENANCE OR REPAIR OF THE EQUIPMENT SPECIFIED IN THIS MANUAL, OR ATTEMPTING TO INSTALL, ADJUST, SERVICE OR REPAIR THE EQUIPMENT SPECIFIED IN THIS MANUAL WITHOUT PROPER SUPERVISION OR TRAINING MAY RESULT IN PRODUCT DAMAGE, PROPERTY DAMAGE, PERSONAL INJURY OR DEATH.

WARNING

Do not bypass safety devices.

WARNING

This modular blower will be installed along with a cased coil which will have R-32 refrigerant. Please refer to the warning label and installation manual on the cased coil for A2L specific instructions.

Contents

Introduction 2
Electrostatic Discharge (ESD) Precautions 2
Checking Product Received 2
Replacement Parts 2
Ordering Parts 2
Important Safety Instructions 2
General Information 4
Achieving Less Air Leakage 4
Clearances And Accessibility 4
Installation Instructions 4
Power and Control wiring 5
Auxiliary Alarm Switch 6
Thermostat Wiring 6
Accessory Contacts 6
Leak Detection Output 7
Refrigerant detection system (RDS) 10
Troubleshooting 11
Network Troubleshooting 13
Diagnostic Codes 14
Setting the Mode Display 15
Wiring Diagram 17
Homeowners Routine Maintenance Recommendations 18
Start Up Checklist 19

THIS PRODUCT CONTAINS ELECTRONIC COMPONENTS WHICH REQUIRE A DEFINITE GROUND. PROVISIONS ARE MADE FOR CONNECTION OF THE GROUND. A DEDICATED GROUND FROM THE MAIN POWER SUPPLY OR AN EARTH GROUND MUST BE PROVIDED.

NOTE: This unit should be installed in a manner so that it is not accessible to the general public.

CAUTION

ELECTRIC HEATER CANNOT BE CONNECTED TO ANY OF THESE MODULAR BLOWERS.

Our continuing commitment to quality products may mean a change in specifications without notice.

© 2024 ***DAIKIN COMFORT TECHNOLOGIES MANUFACTURING, L.P.***
19001 Kermier Rd. Waller, TX 77484
www.daikincomfort.com

Amana is a registered trademark of Maytag Corporation or its related companies and is used under license. All rights reserved.

Introduction

This booklet contains the installation and operating instructions for your modular blower cabinet. All warnings and precautions within this booklet must be observed. Improper installation can result in problems ranging from noisy operation to property or equipment damages, dangerous conditions that could result in injury or personal property damage and that are not covered by the warranty. Read this booklet and any instructions packaged with accessories prior to installation. Give this booklet to the user and explain its provisions. The user should retain this booklet for future reference.

Electrostatic Discharge (ESD) Precautions

NOTE: Discharge your body's static electricity before touching the unit. An electrostatic discharge can adversely affect electrical components.

Use the following precautions during modular blower installation and servicing to protect the integrated control module from damage. By putting the modular blower, the control, and the person at the same electrostatic potential, these steps will help avoid exposing the integrated control module to electrostatic discharge. This procedure is applicable to both installed and uninstalled (ungrounded) blowers.

1. Disconnect all power to the blower. Do not touch the integrated control module or any wire connected to the control prior to discharging your body's electrostatic charge to ground.
2. Firmly touch a clean, unpainted, metal surface of the modular blower near the control. Any tools held in a person's hand during grounding will be discharged.
3. Service integrated control module or connecting wiring following the discharge process in step 2. Use caution not to recharge your body with static electricity; (i.e., do not move or shuffle your feet, do not touch ungrounded objects, etc.). If you come in contact with an ungrounded object, repeat step 2 before touching control or wires.
4. Discharge your body to ground before removing a new control from its container. Follow steps 1 through 3 if installing the control on a blower. Return any old or new controls to their containers before touching any ungrounded object.

Checking Product Received

Upon receiving the unit, inspect it for damage from shipment. Claims for damage, either shipping or concealed, should be filed immediately with the shipping company. Check the unit model number, specifications, electrical characteristics and accessories to determine if they are correct. In the event an incorrect unit is shipped, it must be returned to the supplier and must NOT be installed. The manufacturer assumes no responsibility for installation of incorrectly shipped units.

Replacement Parts

Ordering Parts

When reporting shortages or damages, or ordering repair parts, give the complete unit model and serial numbers as stamped on the unit's nameplate.

Replacement parts for this appliance are available through your contractor or local distributor. For the location of your nearest distributor or contact:

HOMEOWNER SUPPORT

DAIKIN COMFORT TECHNOLOGIES MANUFACTURING, L.P.

19001 KERMIER ROAD

WALLER, TEXAS 77484

(855) 770-5678

Important Safety Instructions

Recognize Safety Symbols, Words, and Labels

The following symbols and labels are used throughout this manual to indicate immediate or potential hazards. It is the owner's responsibility to read and comply with all safety information and instructions accompanying these symbols. Failure to heed safety information increases the risk of property damage, product damage, personal injury or death.

WARNING

HIGH VOLTAGE

DISCONNECT ALL POWER BEFORE SERVICING OR INSTALLING THIS UNIT. MULTIPLE POWER SOURCES MAY BE PRESENT. FAILURE TO DO SO MAY CAUSE PROPERTY DAMAGE, PERSONAL INJURY OR DEATH.

WARNING

TO PREVENT THE RISK OF PROPERTY DAMAGE, PERSONAL INJURY, OR DEATH, DO NOT STORE COMBUSTIBLE MATERIALS OR USE GASOLINE OR OTHER FLAMMABLE LIQUIDS OR VAPORS IN THE VICINITY OF THIS UNIT.

WARNING

TO AVOID PROPERTY DAMAGE, PERSONAL INFURY OR DEATH DUE TO ELECTRICAL SHOCK, THIS UNIT MUST HAVE AN UNINTERRUPTED, UNBROKEN ELECTRICAL GROUND. THE ELECTRICAL GROUND CIRCUIT MAY CONSIST OF AN APPROPRIATELY SIZED ELECTRICAL WIRE CONNECTING THE GROUND LUG IN THE UNIT CONTROL BOX TO THE BUILDING ELECTRICAL SERVICE PANEL.
OTHER METHODS OF GROUNDING ARE PERMITTED IF PERFORMED IN ACCORDANCE WITH THE NATIONAL ELECTRIC CODE (NEC)/AMERICAN NATIONAL STANDARDS INSTITUTE (ANSI)/NATIONAL FIRE PROTECTION ASSOCIATION (NFPA) 70 AND LOCAL/STATE CODES.
IN CANADA, ELECTRICAL GROUNDING IS TO BE IN ACCORDANCE WITH THE CANADIAN ELECTRIC CODE (CSA) C22.1.

CAUTION

WHEN INSTALLING OR SERVICING THIS EQUIPMENT, SAFETY CLOTHING, INCLUDING HAND AND EYE PROTECTION, IS STRONGLY RECOMMENDED. IF INSTALLING IN AN AREA THAT HAS SPECIAL SAFETY REQUIREMENTS (HARD HATS, ETC.), OBSERVE THESE REQUIREMENTS.

WARNING

THIS PRODUCT IS FACTORY-SHIPPED FOR USE WITH 115V/IPH/60HZ ELECTRICAL POWER SUPPLY. DO NOT RECONFIGURE THIS AIR HANDLER TO OPERATE WITH ANY OTHER POWER SUPPLY.

WARNING

DO NOT CONNECT TO OR USE ANY DEVICE THAT IS NOT CERTIFIED BY THE MANUFACTURER FOR USE WITH THIS UNIT. SERIOUS PROPERTY DAMAGE, PERSONAL INJURY, REDUCED UNIT PERFORMANCE AND/OR HAZARDOUS CONDITIONS MAY RESULT FROM THE USE OF SUCH NON-APPROVED DEVICES.

DANGER
PELIGRO

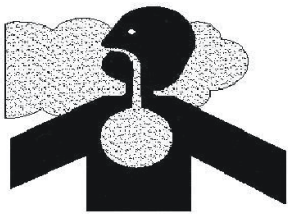

CARBON MONOXIDE POISONING HAZARD

Special Warning for Installation of Furnace or Air Handling Units in Enclosed Areas such as Garages, Utility Rooms or Parking Areas

Carbon monoxide producing devices (such as an automobile, space heater, gas water heater, etc.) should not be operated in enclosed areas such as unventilated garages, utility rooms or parking areas because of the danger of carbon monoxide (CO) poisoning resulting from the exhaust emissions. If a furnace or air handler is installed in an enclosed area such as a garage, utility room or parking area and a carbon monoxide producing device is operated therein, there must be adequate, direct outside ventilation.

This ventilation is necessary to avoid the danger of CO poisoning which can occur if a carbon monoxide producing device continues to operate in the enclosed area. Carbon monoxide emissions can be (re)circulated throughout the structure if the furnace or air handler is operating in any mode.

CO can cause serious illness including permanent brain damage or death. B10259-216

RIESGO DE INTOXICACIÓN POR MONÓXIDO DE CARBONO

Advertencia especial para la instalación de calentadores ó manejadoras de aire en áreas cerradas como estacionamientos ó cuartos de servicio.

Los equipos ó aparatos que producen monóxido de carbono (tal como automóvil, calentador de gas, calentador de agua por medio de gas, etc) no deben ser operados en áreas cerradas debido al riesgo de envenenamiento por monóxido de carbono (CO) que resulta de las emisiones de gases de combustión. Si el equipo ó aparato se opera en dichas áreas, debe existir una adecuada ventilación directa al exterior.

Esta ventilación es necesaria para evitar el peligro de envenenamiento por CO, que puede ocurrir si un dispositivo que produce monóxido de carbono sigue operando en el lugar cerrado.

Las emisiones de monóxido de carbono pueden circular a través del aparato cuando se opera en cualquier modo.

El monóxido de carbono puede causar enfermedades severas como daño cerebral permanente ó muerte. B10259-216

RISQUE D'EMPOISONNEMENT AU MONOXYDE DE CARBONE

Avertissement special au sujet de l'installation d'appareils de chauffage ou de traitement d'air dans des endroits clos, tets les garages, les locaux d'entretien et les stationnements.

Evitez de mettre en marche les appareils produisant du monoxyde de carbone (tels que les automobile, les appareils de chauffage autonome,etc.) dans des endroits non ventilés tels que les d'empoisonnement au monoxyde de carbone. Si vous devez faire fonctionner ces appareils dans un endroit clos, assures-vous qu'il y ait une ventilation directe provenant de l'exterier.

Cette ventilation est nécessaire pour éviter le danger d'intoxication au CO pouvant survenir si un appareil produisant du monoxyde de carbone continue de fonctionner au sein de la zone confinée.

Les émissions de monoxyde de carbone peuvent etre recircules dans les endroits clos, si l'appareil de chauffage ou de traitement d'air sont en marche.

Le monoxyde de carbone peut causer des maladies graves telles que des dommages permanents au cerveau et meme la mort. B10259-216

General Information

The MBVK Blower Cabinets are used in combination with a cased evaporator coil. This combination of blower and coil functions as the indoor part of a split air-conditioning system, and may be matched with a remote condensing or heat pump unit.

Systems should be properly sized by heat gain and loss calculations made according to methods of the Air Conditioning Contractors Association (ACCA) or equivalent. It is the contractor's responsibility to ensure the system has adequate capacity to heat or cool the conditioned space.

Achieving Less Air Leakage:

Ensure all the gaskets remain intact on surfaces as shipped with the unit. Ensure upon installation that the plastic breaker cover is flush on with the access panel and access panel is flush with the cabinet.

With these requirements satisfied, the unit achieves less airflow leakage when tested in accordance with ASHRE Standard 193.

- Cabinet air leakage less than 2.0% at 1.0 inch H_2O when tested in accordance with ASHRAE standard 193.
- Cabinet air leakage less than 1.4% at 0.5 inch H_2O when tested in accordance with ASHRAE standard 193.

Clearances And Accessibility

The unit can be positioned for up flow, counterflow, horizontal right or horizontal left operation. Thirty-six inches should be allotted on the door side for maintenance and service.

To reduce risk of rusting, do not install the unit directly on the ground or on a floor that is likely to be wet. In such environments, the unit must be elevated by use of a sturdy, nonporous material.

Insulation

To ensure efficient operation, review the following precautions.

- If the unit is located in an area with high ambient temperature and/or high humidity, the air handler may be subject to nuisance sweating of the casing. On these installations, a wrap of 2" fiberglass insulation with a vapor barrier is recommended.
- The factory recommends insulating the duct running through any unconditioned spaces.

To reduce operating sound and vibration transmission use flexible canvas duct connections at the cabinet.

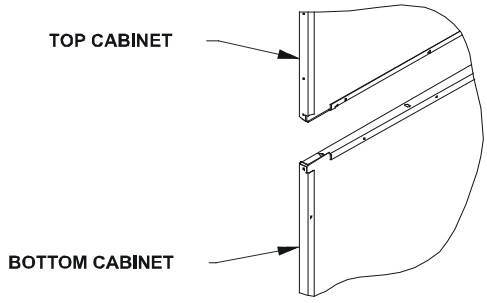

Figure 1 - Coil and Blower Connection

Installation Instructions

NOTE: This appliance is designed for indoor installation only at max. altitude of 10,500 feet above sea level & a min altitude of -184 feet below sea level.

NOTE: Refer to cased coil installation manual for the combined cased coil and blower installation.

WARNING

FAILURE TO PROPERLY CONNECT REFRIGERANT LEAK SENSOR, EEV, PRESSURE SENSOR AND/OR THERMISTOR FROM CASED COIL TO MODULAR BLOWER WILL RESULT IN ERROR CODES AND THE UNIT NOT OPERATING.

WARNING

HIGH VOLTAGE

To prevent personal injury or death due to electrical shock, disconnect the electrical power before electrically connecting the unit.

WARNING

To avoid the risk of fire or equipment damage, use copper conductors.

CAUTION

TO AVOID THE RISK OF PERSONAL INJURY , WIRING TO THE UNIT MUST BE PROPERLY POLARIZED AND GROUNDED.

Power and Control Wiring

IMPORTANT: All routing of electrical wiring must be made through provided electrical knockouts. When removing the electrical knockouts, take care not to damage the PCB. Do not cut, puncture or alter the cabinet for electrical wiring.

Building Electrical Inspection

This unit is designed for single-phase electrical supply only. DO NOT OPERATE MODULAR BLOWER ON A THREE-PHASE POWER SUPPLY. Measure the power supply to the unit. The supply voltage **must** be measured and be in agreement with the unit nameplate power requirements and within the range shown. Refer to Table 1.

Nominal Input	Minimum Voltage	Maximum Voltage
115 VAC	103 VAC	126 VAC

ELECTRICAL VOLTAGE

Table 1

Wire Sizing

Wire size is important to the operation of your equipment. Use the following check list when selecting the appropriate wire size for your unit.

Wire used must be sized to carry the Minimum Circuit Ampacity (MCA) listed on the equipment's Rating Plate.

Refer to the NEC (USA) or CSA (Canada) for wire sizing. The unit MCA for the air handler can be found on the unit Serial and Rating Plate.

Wire must be sized to allow no more than a 2% voltage drop from the building breaker/fuse panel to the unit.

Wires with different insulation temperature ratings have varying ampacities - be sure to check the temperature rating used.

Refer to the latest edition of the National Electric Code or in Canada the Canadian Electric Code when determining the correct wire size.

Maximum Overcurrent Protection (MOP)

Every installation must include an NEC (USA) or CEC (Canada) approved overcurrent protection device. Also, check with local or state codes for any special regional requirements. Protection can be in the form of fusing or HACR style circuit breakers. The Serial and Rating Plate provides the maximum permissible rating of the over current device.

NOTE: Fuses or circuit breakers are to be sized larger than the equipment MCA but not to exceed the MOP.

Electrical Connections – Supply Voltage

IMPORTANT NOTE: USE COPPER CONDUCTORS ONLY.

A disconnect or breaker should be incorporated in the field wiring in accordance the wiring codes. Consult the local power company and local codes before installing the unit. All wiring must be in accordance with the National Electrical Code as well as local codes. Knockouts have been provided on the top of the cabinet for the installation of the electrical conduit. If knockout on the side of the cabinet is used for electrical conduit, an adapter ring must be used in order to meet UL 60335-2-240 safety acquirements. An NEC or CEC approved strain relief is to be used at this entry point. Some codes /municipalities require the wire supply to be enclosed in conduit. Consult your local codes. Use Minimum Circuit Ampacity and type of wire to determine proper wire size.The unit MUST be properly grounded. A ground lug is provided in the unit.
Check all factory connections before connecting electrical power to unit to ensure none were loosened or disconnected during shipping and handling.

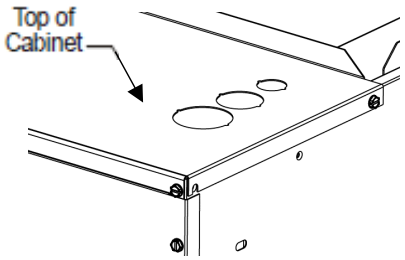

KNOCK-OUT FOR ELECTRICAL CONNECTIONS
Figure 2

The power supply connects to the stripped black and white wires contained in the Modular Blower electrical compartment. Attach the supply wires to the Modular Blower conductors as shown in the unit wiring diagram using appropriately sized solderless connectors or other NEC or CEC approved means. A ground lug is also provided in the electrical compartment. The ground wire from the power supply must be connected to this ground lug.

CAUTION

FIRE HAZARD! To avoid the risk of property damage, personal injury or fire, use only copper conductors.

WARNING

HIGH VOLTAGE
Disconnect all power before servicing or installing this unit. Multiple power source may be present. Failure to do so may cause property damage, personal injury or death.

WARNING

High Voltage!
To avoid property damage, personal injury or death due to electrical shock, this unit MUST have an uninterrupted, unbroken electrical ground. The electrical ground circuit may consist of an appropriately sized electrical wire connecting the ground lug in the unit control box to the building electrical service panel.
Other methods of grounding are permitted if performed in accordance with the National Electric Code (NEC)/ American National Standards Institute (ANSI)/National Fire Protection Association (NFPA) 70 and local/state codes. In Canada, electrical grounding is to be in accordance with the Canadian Electric Code (CSA) C22.1.

CAUTION

Outside the air conditioner, do not route the communication cable from indoor unit to thermostat /outdoor unit with other electrical wiring. Keep at least 2 inches (50 mm) away from other power wiring or other electrical wires. Effects of electrical interference (external noise) may result in malfunction and break down.

Low Voltage Connections

Use N.E.C Class 2 Copper conductor wire. The 24V-control voltage connects the air handler to the room thermostat and outdoor unit. Typical 18 AWG thermostat wire may be used to wire the system components. Two hundred fifty (250) feet is the maximum allowable length of wire between the indoor unit and outdoor unit, and one hundred twenty five (125) feet between indoor unit and thermostat is the maximum allowable length of wire. Low voltage wiring must be connected through the top of the cabinet or either side. See the “Thermostat Wiring” section of this manual for typical low voltage wiring connections.

WARNING

All wiring must comply with applicable local and national codes. Type and location of fused disconnect switch(es) must comply with all applicable codes and provide overcurrent protection as shown on the nameplate.

AUXILIARY ALARM SWITCH

The control is equipped with two Auxiliary Alarm terminals, labeled ALARM (TB4 and TB5) which are typically utilized in series with a condensate switch but could also be used with compatible CO sensors or fire alarms.

The auxiliary alarm switch must be normally closed and open when the alarm occurs. For example, a normally closed condensate switch will open when the base pan’s water level reaches a particular level. The control will respond by turning off the blower motor and outdoor unit and displaying the proper fault codes. If the switch is later detected closed for 30 seconds, normal operation resumes and the error message is removed. (The switch is closed as part of the default factory setting.) The error will be maintained in the equipment’s fault history.

IMPORTANT NOTE: If any of the refrigerant leak detection related error codes (A0/AF/A1) are detected at the same time, the leak detection error (fan on and relay K4R energized) takes priority.

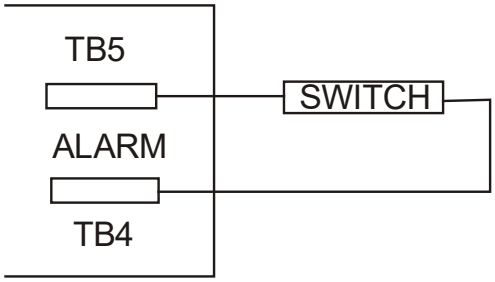

Figure 3

Thermostat Wiring

NOTE: It is **STRONGLY** recommended that no more than two wires be connected in a single terminal. If two wires are used in a terminal, it is recommended the same type of wire be used (i.e. Both stranded or solid for secure connection). Failure to do so may result in intermittent operation.

Typical 18 AWG thermostat wire may be used to wire the system components. Two hundred fifty (250) feet is the maximum of wire between indoor unit and outdoor unit, and one hundred twenty five (125) feet between indoor unit and thermostat.

Two-Wire Outdoor and Four-Wire Indoor Wiring

Typical wiring will consist of two wires between the indoor unit and outdoor unit and four wires between the indoor unit and thermostat. Figure 4 shows the required wires are: data lines, 1 and 2; “R” (24 VAC hot) and “C” (24 VAC common).

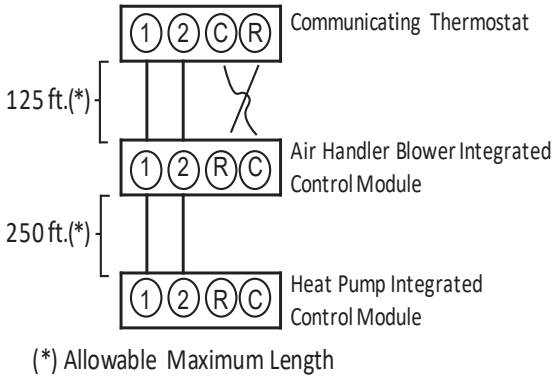

SYSTEM WIRING
Figure 4

ACCESSORY CONTACTS

The control is equipped with an Accessory Relay and a pair of ¼ inch accessory terminals which is normally open, labeled ACC-IN [TB6] and ACC-OUT [TB8]. (This is a Dry contact. See accessory contacts graphic).

The Accessory Relay can be configured to close with humidification functionality or to close anytime the blower is running. A closed relay means the two terminals will have continuity between them. (The control does not provide power to these contacts).

This setting can be made in the “3. Equipment setup menu” of the Daikin *One+*.

“Equipment Set up -> Air handler-> Humidifier relay”

For the setup for humidification functionality, the accessory terminals have 3 operational modes.

1. **humidifier-> humidification mode**
   1-1: off
   Contact (relay) never closes
   1-2: on
   The contact (relay) closes when,
   [humidification demand: on] and **[heating demand: on]** and **[blower motor; on]**
   1-3: independent
   The contact (relay) close when,
   [humidification demand; on] and **[blower motor; on]**
2. **enable with blower**
   Contact (relay) closes when,
   [blower motor; on]
3. **none (factory setting)**
   Contact (relay) never closes

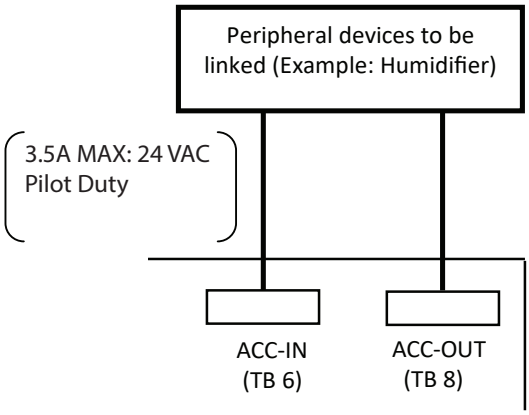

ACCESSORY CONTACTS
Figure 5

LEAK DETECTION OUTPUT (RELAY K4R)

The control board is equipped with three Refrigerant Leak Detection 1/4 inch quick connect terminals, labeled TB11, TB12 and TB13 that are used for the control of optional kits (zoning damper, UV light, ventilator and any accessories that can be potential ignition source). When a refrigerant leak is detected, as indicated by error codes A0, A1 or AF, relay K4R is activated by the control. When the refrigerant leak alarm is issued, dampers must be fully open, UV light must be turned off and accessory ventilation fans must be activated. See the Table 2 and Figure 6 for K4R relay operations. For more details on the error codes A0/A1/AF, Please see “TROUBLESHOOTING” on this manual.

Contact	Error Code A0/A1/AF Not Issued	Error Code A0/A1/AF Not Issued	Maximum Load (Type /voltage /current)
TB 11(Com) to TB12(NC)	CLOSED	OPEN	PILOT/24 VAC/1.1 A
TB11(COM) to TB13(NO)	OPEN	CLOSED	PILOT/24 VAC/1.1 A

Relay K4R when A0/A1/AF is issued
Table 2

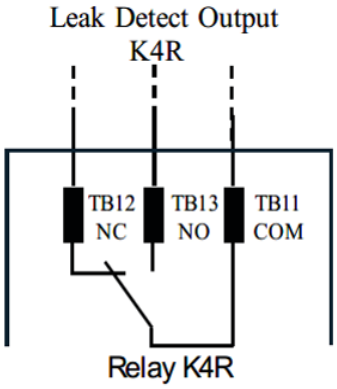

Figure 6

WARNING

ENSURE THAT ANY ADDITIONAL WIRING FROM THE INDOOR UNIT TO THE FIELD DEVICE IS ROUTED AND PROTECTED FROM DAMAGE AND WEAR, AVOIDING THE FLUE PIPE AND ANY JOINTS THAT MAY NEED BRAZED OR DISCONNECTED FOR SERVICE. ALL FIELD CONNECTED DEVICES THAT MAY BECOME A POTENTIAL IGNITION SOURCE MUST BE CONNECTED TO THE LEAK DETECTION OUTPUT (RELAY: K4R) ON THE MODULAR BLOWER CONTROL BOARD. IF A FIELD DEVICE, SUCH AS AN ELECTRONIC AIR CLEANER, IS ALREADY INSTALLED IN THE DUCT WORK AND CANNOT NOT BE INTERLOCKED WITH LEAK DETECTION OUTPUT, IT MUST BE DISABLED OR REMOVED.

Troubleshooting

Electrostatic Discharge (ESD) Precautions

NOTE: Discharge body's static electricity before touching unit. An electrostatic discharge can adversely affect electrical components.

Use the following precautions during air handler installation and servicing to protect the integrated control module from damage. By putting the air handler, the control, and the person at the same electrostatic potential, these steps will help avoid exposing the integrated control module to electrostatic discharge. This procedure is applicable to both installed and uninstalled (ungrounded) blowers.

1. Disconnect all power to the blower. Do not touch the integrated control module or any wire connected to the control prior to discharging your body's electrostatic charge to ground.
2. Firmly touch a clean, unpainted, metal surface of the air handler blower near the control. Any tools held in a person's hand during grounding will be discharged.
3. Service integrated control module or connecting wiring following the discharge process in step 2. Use caution not to recharge your body with static electricity; (i.e., do not move or shuffle your feet, do not touch ungrounded objects, etc.). If you come in contact with an ungrounded object, repeat step 2 before touching control or wires.
4. Discharge your body to ground before removing a new control from its container. Follow steps 1 through 3 if installing the control on a blower. Return any old or new controls to their containers before touching any ungrounded object.

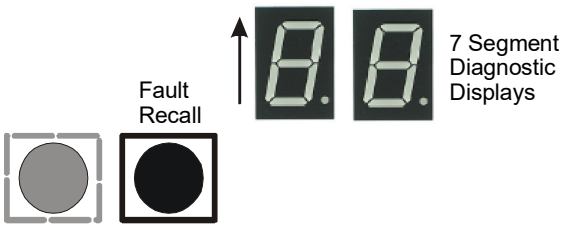

Figure 7

Diagnostic Chart

Refer to the *Troubleshooting Chart* at the end of this manual for assistance in determining the source of unit operational problems. The 7 segment LED display will provide any active fault codes.

Fault Recall

The integrated control module is equipped with a momentary push-button switch that can be used to display the last six faults on the 7 segment LED display. Follow the sequence to use the feature. The control must be in Standby Mode (no thermostat inputs).

1. Press FAULT RECALL button for 2 to 5 seconds*, so that 7 segment display shows "- -".
2. Release FAULT RECALL button in this period, 7 segment display shows the most recent fault.
3. Each time FAULT RECALL button is pressed after that**, 7 segment display outputs next occurred fault.
4. After displaying the series of recent faults, 7 segment displays blink "- -" and goes back to Standby Mode.

To clear the error code history:

1. Press FAULT RECALL button for 10 to 15 seconds***, so that 7 segment displays blink "- -".
2. Release FAULT RECALL button in this period, 7 segment displays show "88" and faults are cleared.

NOTE:

* If FAULT RECALL button is not pressed long enough (for 2 to 5 seconds), control goes back to Standby Mode.
If the FAULT RECALL button is pressed for 5 to 10 seconds, control goes back to Standby Mode.

** Consecutively repeated faults are displayed a maximum of three times.

*** If FAULT RECALL button is pressed for longer than 15 seconds, control goes back to Standby Mode.

Fully Communicating Daikin System

NOTE: For a detailed procedure of thermostat commissioning process, please visit the Daikin *One+* website at http://www.daikinone.com.

Overview

A fully communicating Daikin system is a system that includes a compatible air handler and air conditioner or heat pump with a communicating thermostat.

A fully communicating Daikin heating/air conditioning system differs from a non-communicating/traditional system in the manner in which the indoor unit, outdoor unit and thermostat interact with one another. In a traditional system, the thermostat sends commands to the indoor and outdoor units via analog 24 VAC signals. It is a one-way communication path. The indoor and outdoor units typically do not return information to the thermostat.

For a fully communicating Daikin system, the indoor unit, outdoor unit, and thermostat "communicate" digitally with one another. It is now a two-way communications path. The thermostat still sends commands to the indoor and outdoor units and may also request and receive information from both the indoor and outdoor units. This information may be displayed on the communicating thermostat. The indoor and outdoor units also interact with one another. The outdoor unit may send commands to or request information from the indoor unit. This two-way digital communications between the thermostat and subsystems (indoor/outdoor unit) is the key to unlocking the benefits and features of the fully communicating Daikin system.

Two-way digital communications is accomplished using only two wires. The thermostat and air handler controls are powered with 24 VAC. A maximum of 4 wires between the air handler and thermostat is required to operate the system. An inverter equipped outdoor unit does not require 24 VAC. Only the 2 digital communication wires are required between the air handler and inverter unit (pins 1 and 2 on the thermostat connector.)

Airflow Consideration

Airflow demands are managed differently in a fully communicating system than in a non-communicating wired system. The system operating mode (as determined by the thermostat) determines which unit calculates the system airflow demand. If the indoor unit is responsible for determining the airflow demand, it calculates the demand and sends it to the ECM motor. If the outdoor unit or thermostat is responsible for determining the demand, it calculates the demand and transmits the demand along with a fan request to the indoor unit. The indoor unit then sends the demand to the ECM motor. Table 3 lists the various fully communicating Daikin systems, the operating mode, and airflow demand source.

For example, assume the system is a heat pump matched with an air handler. With a call for low stage cooling, the heat pump will calculate the system's low stage cooling airflow demand. The heat pump will then send a fan request along with the low stage cooling airflow demand to the air handler. Once received, the air handler will send the low stage cooling airflow demand to the ECM motor. The ECM motor then delivers the low stage cooling airflow. See the applicable fully communicating Daikin System air conditioner or heat pump installation manual for the airflow delivered during cooling or heat pump heating.

In continuous fan mode, the communicating thermostat provides the airflow demand. The communicating thermostat provides 4 continuous fan speeds (25%, 50%, 75% and 100% of maximum airflow). During continuous fan operation, the thermostat sends a fan request along with the continuous fan demand to the air handler. The air handler, in turn, sends the demand to the ECM motor. The ECM motor delivers the requested continuous fan airflow.

System Troubleshooting

NOTE: Refer to the instructions accompanying the Communicating compatible outdoor AC/HP unit for unit specific troubleshooting information. Refer to the *Troubleshooting Chart* at the end of this manual for a listing of possible air handler error codes, possible causes and corrective actions.

ATTENTION INSTALLER - IMPORTANT NOTICE!

Please read carefully before installing this unit.

Power line terminal #C from Indoor unit must connect to terminal #C on thermostat and power line terminal #R from indoor unit must connect to terminal #R on thermostat. Verify wires are not reversed.

(**Note**: The order of the terminals of the indoor unit and the Daikin *One+* thermostat may be different.)

Do not attach any wires to the R & C Terminals on the AC/HP, as they are not needed for inverter unit.

Data line terminal #1 from AC/HP must connect to terminal #1 on indoor unit and thermostat and data line terminal #2 from AC/HP must connect to terminal #2 on indoor unit and thermostat. Verify wires are not reversed.

System	System Operating Mode	Airflow Demand Source
Air Conditioner + Cased Coil +Modular Blower	Cooling	Modular Blower
	Continous Fan	Thermostat
Heat Pump + Air Conditioner	Cooling	Heat Pump
	Heat Pump Heating Only	Heat Pump
	Continuous Fan	Thermostat

Table 3
Air flow Demand source for different operating modes

REFRIGERANT DETECTION SYSTEM (RDS)

Function: Refrigerant Detection System (RDS) is installed in this equipment to detect any R32 leakage in the coil and take action to mitigate any risk of ignition/ fire.

Operation: When a leak is detected, the RDS shall send signals for the unit to perform these actions:

1. Turn on the blower to circulate air with Mitigation CFM
2. Error code A0 issued
3. Fully open damper (*1)
4. Switch off UV light (*1)

(*1) If the damper and/or UV lamp are installed in the field, be sure to refer to the Leak Detection Output (Relay K4R) details mentioned in this manual and construct the wiring so that they will activate as mentioned above when a leak is detected.

Servicing: Before servicing identify the Mode of operation of the system by reading the 7-Segment Display on the PCB which can be seen through the round glass view on top access panel and matching the 7-Segment Display with mode of operation in Diagnostic label which is attached on the Blower access panel. After identifying the mode of operation take recommended actions as specified in Table DIAGNOSTIC CODES.

Mitigation CFM: When one of the error codes A0/A1/ AF that is related to refrigerant leak detection system is issued, the blower is activated with the mitigation CFM above the Qmin shown in Cased Coil IOM.

Refrigeration Leak Test

Conduct Refrigerant Leak Test to check that the refrigerant leak detection system works when a damper and/or UV light are installed. To start RefrigerantLeak Test, go to “Refrigerant Leak Detection” menu under “4 System Optimization” on the thermostat’s commissioning menu. Switch “Refrigerant leak test” setting to “Run test” to start the refrigerant leak test. When the unit goes into Refrigerant Leak Test, the message will be displayed on the thermostat to inform that it’s in testing mode. Check that the refrigerant leak detection actions work properly (the blower runs, the zoning damper fully opens, and the UV light is switched off.) After confirming these actions, change the setting for “Refrigerant leak test” to “Stop” to finish the test. Note: Refrigerant Leak Test is automatically turned off 1 hour after it starts.

Error Code	PCB LED Display	Description	Possible Causes	Corrective Actions
EE	No display (EE display is EMG mode)	• No power supply to ID blower / no 24 volt power to PCB • Blown fuse or circuit breaker • PCB has an internal fault	• Manual disconnect switch OFF • No power supply to ID blower / no 24 volt power to PCB • Blown fuse or faulty circuit breaker • Control board has internal fault	• Assure 115 volt and 24 volt power to blower and control board. • Check fuse F2U on control board • Check for possible short in 115 volt and 24 volt circuits. Repair as necessary. • Replace the control board.
Eb	E_Eb	Selecting "no heater kit" and receiving electric heat demand	• No heater kit selected	• Select the valid heater kit on thermostat • Valid dip switch selection (heater kit selection out of range of the unit configuration)
E5	E_E5	Fuse Open	• Fuse (F1U) is blown • Connector TB10 is open	• Replace fuse • Check wiring to AUX alarm, heater kit, communication connection. • Replace the control board *After recovering the system, E5 will still be displayed on the indoor PCB (about 30 seconds). BLOWN FUSE will still be displayed on the thermostat within 45 seconds. They will be cleared automatically.*
EF	E_EF	Auxiliary Switch Open	• High water level in the evaporation coil • The connected alarm device is activated • Auxiliary Alarm terminals (TB4, TB5) are open	• Check water level in drain pan • Check alarm device. • Close Auxiliary terminals TB4 and TB5 if not used *After recovering the system, EF will still be displayed on the indoor PCB (about 30 seconds). AUXILIARY CONTACTS OPEN will still be displayed on the thermostat within 45 seconds. They will be cleared automatically.*
d0	E_d0	Data not on Network	• No shared data on the network	• Populate shared data set using memory card (BTSDL01).
d1	E_d1	Invalid Data on Network	• Wrong shared data on the network	• Populate shared data set using memory card (BTSDL01).
d4	E_d4	Invalid Memory Card Data	• Wrong memory card data	• Replace circuit board • Rewrite data using the correct memory card (BTSDL01).
b0	E_b0	Blower Motor not running	• Fan/motor obstruction • Power interruption (low voltage) • Incorrect / loose wiring	• Check for obstruction on the fan/motor • Verify the input voltage at the motor • Check wiring or tighten wiring connections if needed • Replace circuit board or motor
b1	E_b1	Blower Motor Communication error	• Incorrect / loose wiring • Power interruption (low voltage)	• Check wiring or tighten wiring connections if needed • Verify the input voltage at the motor • Replace circuit board or motor
b2	E_b2	Blower Motor HP Mismatch	• Incorrect size motor • Invalid shared data	• Correct motor installation • Populate shared data set using memory card (BTSDL01).
b3	E_b3	Blower Motor operating in Power, Temp or Speed Limiting conditions	• Fan/motor obstruction or blocked filters • Power interruption (low voltage) • Incorrect wiring • Blockage in the airflow (ductwork) or ductwork undersized	• Check for obstruction on the fan/motor/ductwork, clean filters • Verify the input voltage at the motor • Check wiring • Replace motor

Error Code	PCB LED Display	Description	Possible Causes	Corrective Actions
b9	E_b9	Low Indoor Airflow (without Electric Heat mode)	• Fan/motor obstruction or blocked filters • Restrictive ductwork or ductwork undersized • Wiring disconnected • Wrong outdoor/indoor combination • ID motor failure	• Check for obstruction on the fan/motor • Check ductwork/filter for blockage, clean filters • Remove obstruction. Verify all registers are fully open • Check the connections and the rotation of the motor • Verify the input voltage at the motor • Verify ductwork is appropriately sized for system. Resize/replace ductwork if needed • Replace motor
9b	E_9b	Low Indoor Airflow (with Electric Heat mode)	• Fan/motor obstruction or blocked filters • Restrictive ductwork or ductwork undersized • ID motor failure • Wiring disconnected	• Check for obstruction on the fan/motor • Check ductwork/filter for blockage, clean filters • Remove obstruction. Verify all registers are fully open • Check the connections and the rotation of the motor • Verify the input voltage at the motor • Verify ductwork is appropriately sized for system. Resize/replace ductwork if needed • Replace motor
70	E_70	EEV disconnection detected	• Indoor EEV coil not connected • Incorrect wiring to EEV	• Check Indoor EEV coil connection (PCB and junction connector) • Replace EEV coil • Check the resistance value of EEV coil (refer service manual) • Replace the control board
73	E_73	Liquid side thermistor abnormality	• Open (or) short circuit of the liquid thermistor (X5A) • Liquid thermistor reading incorrect or values outside the normal range	• Check the connection to liquid thermistor (PCB and junction connector) • Check the resistance value of the thermistor (refer service manual) • Replace thermistor • Replace the control board
74	E_74	Gas side thermistor abnormality	• Open (or) short circuit of the gas thermistor (X5A) • Gas thermistor reading incorrect or values outside the normal range	• Check the connection to gas thermistor (PCB and junction connector) • Check the resistance value of the thermistor (refer service manual) • Replace thermistor • Replace the control board
75	E_75	Pressure sensor abnormality	• Open (or) short circuit of the Pressure sensor (X15A) • Pressure sensor reading incorrect or values outside the normal range	• Check the connection to pressure sensor (PCB and junction connector) • Check the output voltage of the pressure sensor (refer service manual) • Replace pressure sensor • Replace the control board
77	E_77	Indoor Unit - Thermostat communication error (start-up & during operation)	• Incorrect wiring between ID unit and thermostat. *The system may have the communication error without error code 77 on the indoor PCB. Follow NETWORK TROUBLESHOOTING* • Thermostat failure • Power interruption (low voltage)	• Check for thermostat and indoor unit wiring • Verify the input voltage at the ID unit and thermostat *After recovering the system with power supply, TSTAT ID NO COM will continue to be displayed on the thermostat within 2 minutes. The error code will be cleared automatically.* • Replace control board or thermostat • Press "LEARN" button on PCB for more than 5 seconds to reestablish network
A0	E_A0	Refrigerant Leak Alarm	• Refrigerant Leak • A2L sensor failure	• Ventilate the room before conducting any actions • Check coil leakage • Remove refrigerant from system and replace coil
AF	E_AF	A2L Sensor Communication Error	• A2L sensor not connected • Incorrect wiring of A2L sensor	• Check the connection of A2L sensor • Replace A2L sensor
A1	E_A1	A2L Sensor Internal Alarm	• A2L sensor failure	• Replace A2L sensor • Replace control board

NETWORK TROUBLESHOOTING

If a network communication error code has occurred, use the following steps to help troubleshoot the system. (For network communication error codes, refer to the table below and the tables of error codes for outdoor unit and indoor unit.)

After any wiring changes have been made or the dip switches of DS1 on the outdoor control board and/or DS 7 on the indoor unit control board have been changed, apply power to the system and see if the error codes have cleared.

1. Confirm low voltage wiring is correct per installation instructions. Check for miswiring. (i.e. Terminal 1 and 2 is reversed.)

NOTE: A removable plug connector is provided with the control to make thermostat wire connections. This plug may be removed, wire connections made to the plug, and replaced. It is strongly recommended that you do not connect more than two wires into a single terminal in the field because there is a risk of the wires becoming loose, which may result in intermittent operation.

2. Check wires for damage. (i.e. Broken wire at terminal, broken inside wire nuts or damaged cable between units.)
3. Perform continuity check on wires to make sure cable is OK. Replace the cable if necessary.
4. Change both dip switch 1 and 2 of DS1 on the outdoor unit control board. In case the indoor unit control board has DS7, refer to the following table 4. Try the combinations of dip switches for DS1 and DS7 on the outdoor and indoor unit control board, respectively, one by one. Check that any combinations clear the communication error. These dip switches change the termination resistance value of the communication circuit.

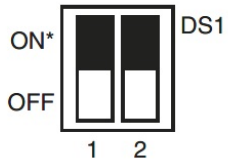

Outdoor unit DS1

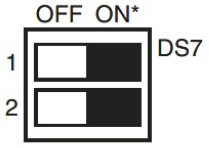

Indoor unit DS7

(*)Default factory setting.

Dip Switch Setting Combinations

Setting Combinations	DS1 on the outdoor unit control board	DS7 on the indoor unit control board
1*	(both) ON	(both)ON
2	(both) OFF	(both) ON
3	(both) ON	(both) OFF
4	(both) OFF	(both) OFF

(*) Default factory setting

Table 4

The integrated control module has some onboard tools that can be used to troubleshoot the network. Refer to Table 5 These tools are: red communications LED, green receive (Rx) LED, and the learn button.

- Red communications LED – Indicates the status of the network. The table below indicates the LED status and the corresponding potential problem.
- Green receive LED – Indicates network traffic. The table below indicates the LED status and the corresponding potential problem.
- LEARN button – Used to reset the network. Press the button for approximately 5 seconds to reset the network

LED COLOR	LED Status	Indication	Probable Causes	Corrective Actions
Red Communications LED (H2P)	OFF	Normal condition	• None	• None
	1 Flash	Communication failure	• Unknown packet is received • Communications failure	• Depress learn button • Verify wiring connection
	2 Flash	Out-of-box reset	• Control power up • Learn button depressed	• None
Green Receive LED (H3P)	OFF	No power Communications error	• No power to unit • Open fuse • Communication error	• Check circuits breakers and fuses; Reset/Replace if needed • Reset network by depressing learn button • Check communication wires (terminal 1/terminal 2 wires); Replace if needed • Check for shorts in low voltage wiring
	1 Steady Flash	No network found	• Broken/disconnected communication wire(s) • Unit is installed as a legacy/traditional system	• Check communication wires (terminal 1/terminal 2 wires); Replace if needed • Check installation type (legacy/traditional or communicating)
	Rapid Flashing	Normal network traffic	• Control is "taking" on network as expected	• None
	On Solid	Terminal 1/Terminal 2 miss-wire	• Terminal 1 and Terminal 2 wires reversed at indoor unit, thermostat, or outdoor unit • Short between terminal 1 and terminal 2 wires • Short between terminal 1 or terminal 2 two wires and terminal C (24VAC) or terminal R (24VAC, COM)	• Check communication wires (terminal 1/terminal 2 wires); Replace if needed

Table 5

DIAGNOSTIC CODES

7 SEGMENT LED DISPLAY	DESCRIPTION OF CONDITION
(NO DISPLAY)	INTERNAL CONTROL FAULT / NO POWER
On	STANDBY, WAITING FOR INPUTS
EE	EMERGENCY MODE RUNNING
Eb	NO HEATER KIT INSTALLED - SYSTEM CALLING FOR AUXILIARY HEAT (MINOR ERROR CODE)
Ed	HEATER KIT DIP SWITCHES NOT SET PROPERLY
E5	FUSE OPEN
EF	AUXILIARY SWITCH OPEN
d0	DATA NOT ON NETWORK
d1	INVALID DATA ON NETWORK
d4	INVALID MEMORY CARD DATA
b0	BLOWER MOTOR NOT RUNNING
b1	BLOWER MOTOR COMMUNICATION ERROR
b2	BLOWER MOTOR HP (HORSE POWER) MISMATCH
b3	BLOWER MOTOR OPERATING IN POWER, TEMPERATURE, OR SPEED LIMIT
b9	LOW INDOOR AIRFLOW (MINOR ERROR CODE) (WITHOUT ELECTRICAL HEATER MODE)
9b	LOW INDOOR AIRFLOW (MAJOR ERROR CODE) (ELECTRICAL HEATER MODE ONLY)
70	EEV OPEN CIRCUIT
73	LIQUID TEMPERATURE ABNORMALITY / THERMISTOR OPEN CIRCUIT
74	GAS TEMPERATURE ABNORMALITY / THERMISTOR OPEN CIRCUIT
75	PRESSURE ABNORMALITY / PRESSURE SENSOR OPEN CIRCUIT
77	INDOOR UNIT - THERMOSTAT COMMUNICATION ERROR (STARTUP OPERATION & DURING OPERATION)
Hu	HUMIDIFICATION DEMAND (RUNNING WITHOUT HEATING)
A0	A2L REFRIGERANT LEAKAGE ALARM
AF	A2L SENSOR COMM ALARM
A1	A2L SENSOR INTERNAL ALARM

7SEG LED WILL FLASH AIRFLOW RATE AS SHOWN BELOW

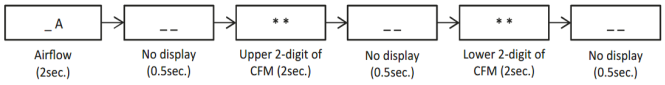

0140A01620-A

CAUTION

INCORRECT DIP SWITCH SETTINGS COULD CAUSE ERROR. SEE BELOW FOR DEFAULT DIP SWITCH SETTINGS.

DEFAULT DIP SWITCH SETTING

DS1 DELIVERY SET

DS1	1(S1)	OFF
	2(S2)	OFF
	3(S3)	OFF
	4(S4)	OFF

DS2 DELIVERY SET

DS2	1(S5)	OFF
	2(S6)	OFF
	3(S7)	OFF
	4(S8)	OFF

DS3 DELIVERY SET

DS3	1(S9)	OFF
	2(S10)	OFF
	3(S11)	OFF
	4(S12)	OFF

DS4 DELIVERY SET

DS4	1(S13)	ON
	2(S14)	OFF
	3(S15)	ON
	4(S16)	OFF

DS5 DELIVERY SET

DS5	1(S17)	ON
	2(S18)	OFF
	3(S19)	OFF
	4(S20)	OFF

DS6 DELIVERY SET

DS6	1(S21)	OFF
	2(S22)	OFF
	3(S23)	OFF
	4(S24)	OFF

DS7 DELIVERY SET

DS7	1	ON
	2	ON

SETTING THE MODE DISPLAY

MODE DISPLAY INTRODUCTION

A 2-digit display is provided on the printed circuit board (PCB) as a backup tool to the thermostat for accessing error codes and erasing error code history of the indoor unit. Follow the information provided in this section to learn how to use the mode display

DISPLAY

The display consists of 2 digits.

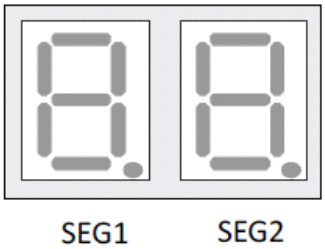

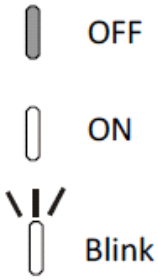

DISPLAY BUTTON LAYOUT

The display buttons shown can be used to navigate and select items:

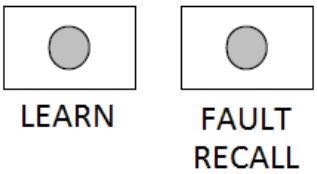

Example of button layout is shown above

FAULT CODE HISTORY NAVIGATION

This mode will allow the user to see the six most recent system faults. Please follow the flow chart to navigate to error codes from screen zero.

For a list of the fault codes, please see the TROUBLESHOOTING tables in this document.

It is also possible to erase all the diagnostics codes from this menu.

SETTING THE MODE DISPLAY

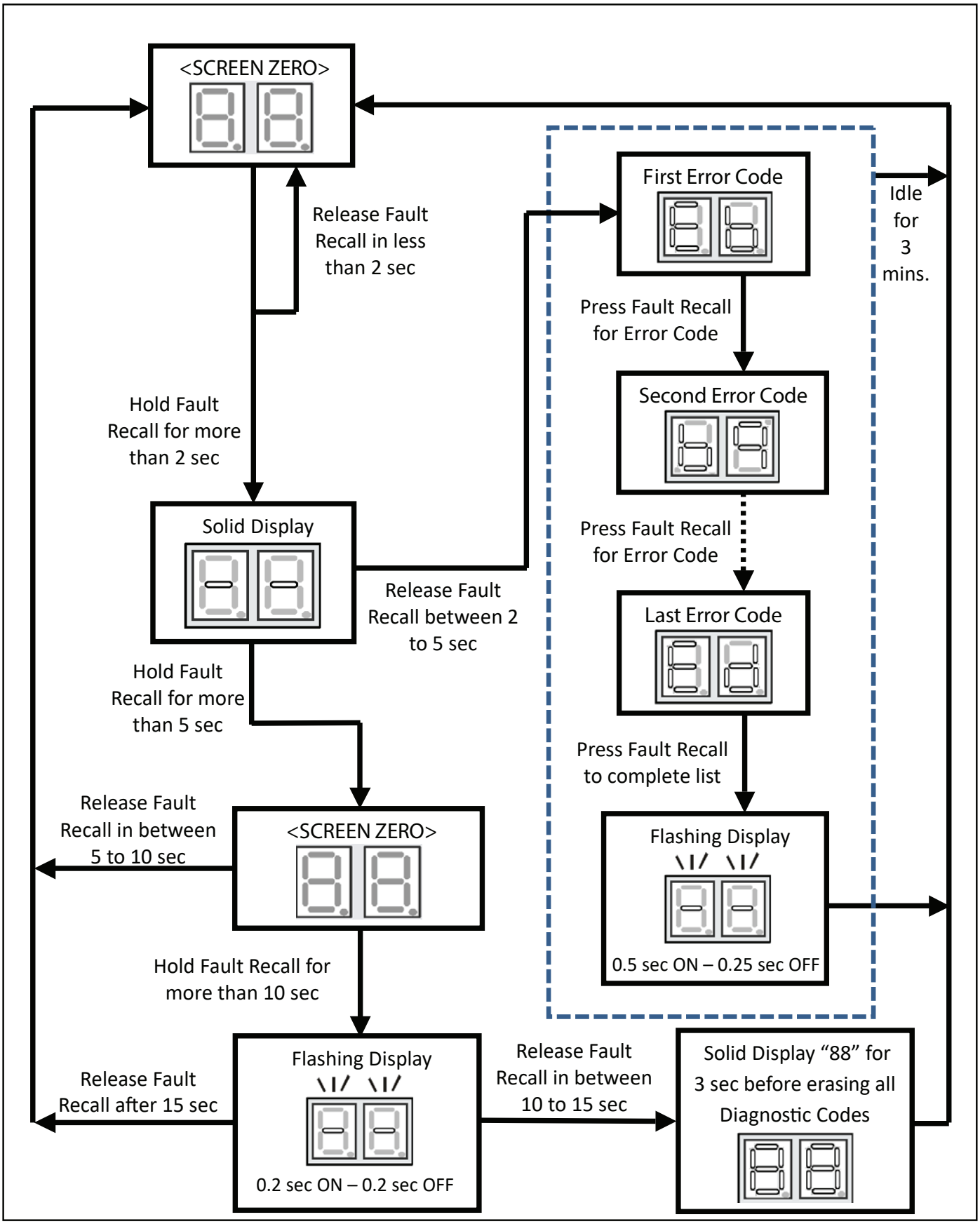

WIRING DIAGRAM

WARNING **HIGH VOLTAGE! DISCONNECT ALL POWER BEFORE SERVICING. MULTIPLE POWER SOURCES MAY BE PRESENT. FAILURE TO DO SO MAY CAUSE PROPERTY DAMAGE, PERSONAL INJURY OR DEATH.**

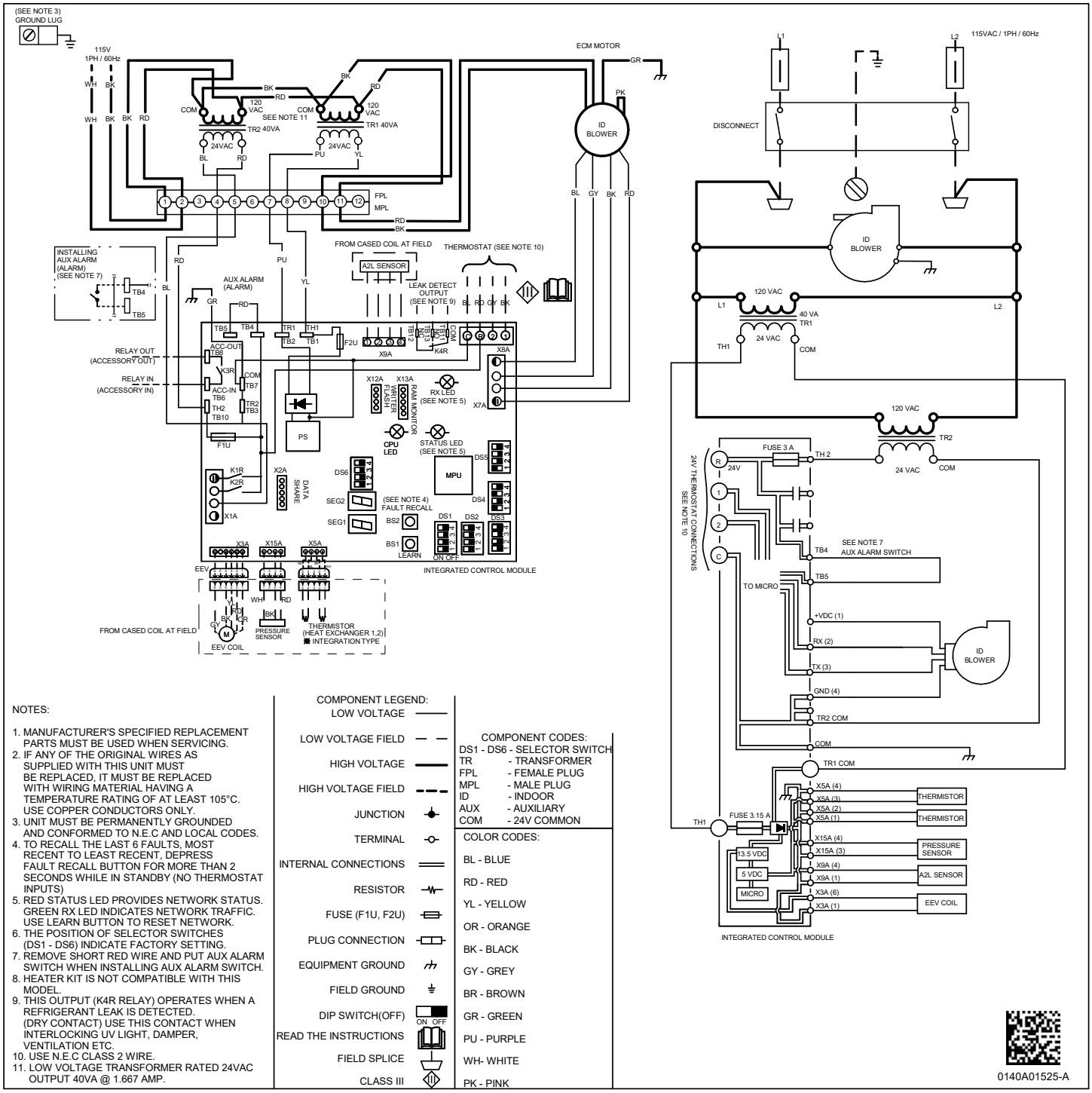

NOTES:

1. MANUFACTURER'S SPECIFIED REPLACEMENT PARTS MUST BE USED WHEN SERVICING.
2. IF ANY OF THE ORIGINAL WIRES AS SUPPLIED WITH THIS UNIT MUST BE REPLACED, IT MUST BE REPLACED WITH WIRING MATERIAL HAVING A TEMPERATURE RATING OF AT LEAST 105°C. USE COPPER CONDUCTORS ONLY.
3. UNIT MUST BE PERMANENTLY GROUNDED AND CONFORMED TO N.E.C AND LOCAL CODES.
4. TO RECALL THE LAST 6 FAULTS, MOST RECENT TO LEAST RECENT, DEPRESS FAULT RECALL BUTTON FOR MORE THAN 2 SECONDS WHILE IN STANDBY (NO THERMOSTAT INPUTS)
5. RED STATUS LED PROVIDES NETWORK STATUS. GREEN RX LED INDICATES NETWORK TRAFFIC. USE LEARN BUTTON TO RESET NETWORK.
6. THE POSITION OF SELECTOR SWITCHES (DS1 - DS6) INDICATE FACTORY SETTING.
7. REMOVE SHORT RED WIRE AND PUT AUX ALARM SWITCH WHEN INSTALLING AUX ALARM SWITCH.
8. HEATER KIT IS NOT COMPATIBLE WITH THIS MODEL.
9. THIS OUTPUT (K4R RELAY) OPERATES WHEN A REFRIGERANT LEAK IS DETECTED. (DRY CONTACT) USE THIS CONTACT WHEN INTERLOCKING UV LIGHT, DAMPER, VENTILATION ETC.
10. USE N.E.C CLASS 2 WIRE.
11. LOW VOLTAGE TRANSFORMER RATED 24VAC OUTPUT 40VA @ 1.667 AMP.

COMPONENT LEGEND:

- LOW VOLTAGE
- LOW VOLTAGE FIELD
- HIGH VOLTAGE
- HIGH VOLTAGE FIELD
- JUNCTION
- TERMINAL
- INTERNAL CONNECTIONS
- RESISTOR
- FUSE (F1U, F2U)
- PLUG CONNECTION
- EQUIPMENT GROUND
- FIELD GROUND
- DIP SWITCH(OFF) (ON OFF)
- READ THE INSTRUCTIONS
- FIELD SPLICE
- CLASS III

COMPONENT CODES:

DS1 - DS6	- SELECTOR SWITCH
TR	- TRANSFORMER
FPL	- FEMALE PLUG
MPL	- MALE PLUG
ID	- INDOOR
AUX	- AUXILIARY
COM	- 24V COMMON

COLOR CODES:

- BL - BLUE
- RD - RED
- YL - YELLOW
- OR - ORANGE
- BK - BLACK
- GY - GREY
- BR - BROWN
- GR - GREEN
- PU - PURPLE
- WH- WHITE
- PK - PINK

0140A01525-A

Wiring is subject to change. Always refer to the wiring diagram on the unit for the most up-to-date wiring.

AIR HANDLER

AIR HANDLER HOMEOWNER'S ROUTINE MAINTENANCE RECOMMENDATIONS

*We strongly recommend a bi-annual maintenance checkup be performed before the heating and cooling seasons begin by a **qualified servicer**.*

REPLACE OR CLEAN FILTER

IMPORTANT NOTE: Never operate unit without a filter installed as dust and lint will build up on internal parts resulting in loss of efficiency, equipment damage and possible fire.

An indoor air filter must be used with your comfort system. A properly maintained filter will keep the indoor coil of your comfort system clean. A dirty coil could cause poor operation and/or severe equipment damage.

Your air filter or filters could be located in your furnace, in a blower unit, or in "filter grilles" in your ceiling or walls. The installer of your air conditioner or heat pump can tell you where your filter(s) are, and how to clean or replace them.

Check your filter(s) at least once a month. When they are dirty, replace or clean as required. Disposable type filters should be replaced. Reusable type filters may be cleaned.

You may want to ask your dealer about high efficiency filters. High efficiency filters are available in both electronic and non-electronic types. These filters can do a better job of catching small airborne particles.

WARNING

HIGH VOLTAGE!
DISCONNECT ALL POWER BEFORE SERVICING OR INSTALLING THIS UNIT. MULTIPLE POWER SOURCES MAY BE PRESENT. FAILURE TO DO SO MAY CAUSE PROPERTY DAMAGE, PERSONAL INJURY OR DEATH.

MOTORS

Indoor and outdoor fan motors are permanently lubricated and do not require additional oiling.

CAUTION

TO AVOID THE RISK OF EQUIPMENT DAMAGE OR FIRE, INSTALL THE SAME AMPERAGE BREAKER OR FUSE AS YOU ARE REPLACING. IF THE CIRCUIT BREAKER OR FUSE SHOULD OPEN AGAIN WITHIN THIRTY DAYS, CONTACT A QUALIFIED SERVICER TO CORRECT THE PROBLEM.
IF YOU REPEATEDLY RESET THE BREAKER OR REPLACE THE FUSE WITHOUT HAVING THE PROBLEM CORRECTED, YOU RUN THE RISK OF SEVERE EQUIPMENT DAMAGE.

BEFORE YOU CALL YOUR SERVICER

- Check the thermostat to confirm that it is properly set.
- Wait 15 minutes. Some devices in the outdoor unit or in programmable thermostats will prevent compressor operation for awhile, and then reset automatically. Also, some power companies will install devices which shut off air conditioners for several minutes on hot days. If you wait several minutes, the unit may begin operation on its own.
- Check the electrical panel for tripped circuit breakers or open fuses. Reset the circuit breakers or replace fuses as necessary.
- Check the disconnect switch near the indoor furnace or blower to confirm that it is closed.
- Check for obstructions on the outdoor unit . Confirm that it has not been covered on the sides or the top. Remove any obstruction that can be safely removed. If the unit is covered with dirt or debris, call a qualified servicer to clean it.
- Check for blockage of the indoor air inlets and outlets. Confirm that they are open and have not been blocked by objects (rugs, curtains or furniture).
- Check the filter. If it is dirty, clean or replace it.
- Listen for any unusual noise(s), other than normal operating noise, that might be coming from the outdoor unit. If you hear unusual noise(s) coming from the unit, call a qualified servicer.

A2L ACCESSORY / ZONING CONTROL KIT

When using the R32 system, if a refrigerant leak is detected, the zoning damper must be fully opened and accessories that could be a source of ignition must be turned off. The A2L Accessory/ Zoning Control Kit can fully open the damper in response to the refrigerant leak detection output from the indoor unit.

It also has an output to turn off accessories that could be a source of ignition, such as UV lights.

For details, refer to the installation manual for the A2L Accessory / Zoning Control Kit IO-7032 and spec sheet for Kit Number/ Models.

START-UP CHECKLIST

Air Handler / Coil				
	Model Number	_____		
	Serial Number	_____		
ELECTRICAL				
Line Voltage (Measure L1 and L2 Voltage)	L1 - L2	_____		
Secondary Voltage (Measure Transformer Output Voltage)	R - C	_____		
Blower Amps		_____		
Heat Strip 1 - Amps		Not Applicable		
Heat Strip 2 - Amps		Not Applicable		
BLOWER EXTERNAL STATIC PRESSURE				
Return Air Static Pressure		_____	IN. W.C.	
Supply Air Static Pressure		_____	IN. W.C.	
Total External Static Pressure (Ignoring +/- from the reading above, add total here)		_____	IN. W.C.	
TEMPERATURES				
Return Air Temperature (Dry bulb / Wet bulb)		_____	DB °F	_____ WB °F
Cooling Supply Air Temperature (Dry bulb / Wet bulb)		_____	DB °F	_____ WB °F
Heating Supply Air Temperature		_____	DB °F	
Temperature Rise		_____	DB °F	
Delta T (Difference between Supply and Return Temperatures)		_____	DB °F	

Air Handler / Coil - (Inverter Matched)	
INVERTER AH / COIL ONLY	
Check EEV and EEV wiring is secure (no adjustment required)	_____

Additional Checks	
Check wire routings for any rubbing	_____
Check product for proper draining	_____
Check screw tightness on blower wheel	_____
Check factory wiring and wire connections	_____
Check product for proper clearances as noted by installation instructions	_____

°F to °C formula: (°F - 32) divided by 1.8 = °C **°C to °F formula: (°C multiplied by 1.8) + 32 = °F**

CUSTOMER FEEDBACK
We are very interested in all product comments.
Please fill out the feedback form on one of the following links:
Daikin Products: (https://daikincomfort.com/contact-us)
Goodman® Brand Products: (http://www.goodmanmfg.com/about/contact-us).
Amana® Brand Products: (http://www.amana-hac.com/about-us/contact-us).
You can also scan the QR code on the right for the product brand you purchased to be directed to the feedback page.

DAIKIN

GOODMAN® BRAND

AMANA® BRAND

NOTE: SPECIFICATIONS AND PERFORMANCE DATA LISTED HEREIN ARE SUBJECT TO CHANGE WITHOUT NOTICE.

Visit our website at www.goodmanmfg.com or www.amana-hac.com for information on:

- Products
- Warranties
- Customer Services
- Parts
- Contractor Programs and Training
- Financing Options

Daikin Comfort Technologies Manufacturing, L.P.
19001 Kermier Rd., Waller, TX 77484

© 2024
Amana is a registered trademark of Maytag or its related companies and is used under license. All rights reserved.