ARUF**14**/ARPT**14**
ASPT**14**/ASUF**14**

AIR HANDLERS INSTALLATION & OPERATING INSTRUCTIONS

Contents

1 Important Safety Instructions 1
2 Shipping Inspection 3
2.1 Parts 3
2.2 Handling 3
3 Codes & Regulations 3
4 Replacement Parts 3
5 Pre-Installation Considerations 3
5.1 Preparation 3
5.2 System Matches 3
5.3 Interconnecting Tubing 3
5.4 Clearances 4
5.5 Horizontal Applications 4
6 Installation Location 4
6.1 Upflow Installation 4
6.2 Horizontal Left Installation 4
6.3 Downflow/Horizontal Right Installation 5
7 Refrigerant Lines 7
7.1 Tubing Size 7
7.2 Tubing Preparation 7
7.3 Special Instructions 8
7.4 Tubing Connections for Flowrator Model 8
7.5 Tubing Connections for TXV Models 8
8 Condensate Drain Lines 9
9 Ductwork 9
9.1 Return Ductwork 9
10 Return Air Filters 10
11 Electric Heat 10
12 Electrical and Control Wiring 11
12.1 Building Electrical Service Inspection 11
12.2 Wire Sizing 12
12.3 Maximum Overcurrent Protection (MOP) 12
12.4 Electrical Connections – Supply Voltage 12
12.4.1 Air Handler Only (Non-Heat Kit Models) 12
12.4.2 Air Handler - Non-Circuit Breaker Heat Kits 12
12.4.3 Air Handler With Circuit Breaker Heat Kit 12
12.5 Low Voltage Connections 13
12.5.1 Thermostats 13
12.6 Speed Tap Adjustment 13
13 Achieving 2% Low Leakage Rate 13
14 Start-Up Procedure 13
15 Regular Maintenance 13
16 Airflow Data 14
21 Wiring Diagrams 20

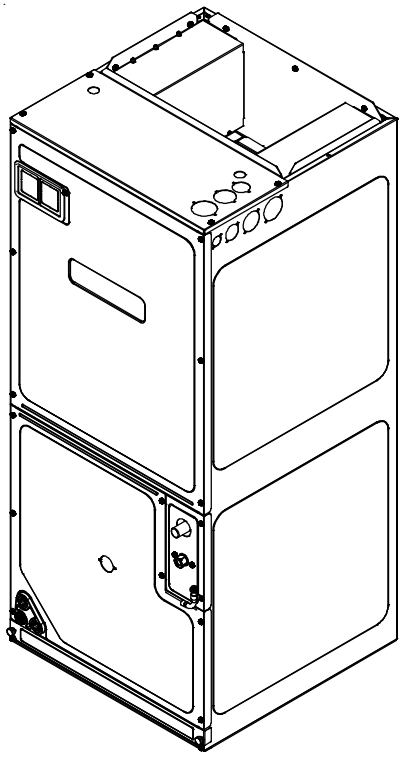

RECOGNIZE THIS SYMBOL AS A SAFETY PRECAUTION.

1 Important Safety Instructions

The following symbols and labels are used throughout this manual to indicate immediate or potential safety hazards. It is the owner's and installer's responsibility to read and comply with all safety information and instructions accompanying these symbols. Failure to heed safety information increases the risk of personal injury, property damage, and/or product damage.

Keep this literature in a safe place for future reference.

IO-427L
7/2015

ATTENTION INSTALLING PERSONNEL

Prior to installation, thoroughly familiarize yourself with this Installation Manual.
Observe all safety warnings. During installation or repair, caution is to be observed.
It is your responsibility to install the product safely and to educate the customer on its safe use.

WARNING

HIGH VOLTAGE!
Disconnect ALL power before servicing. Multiple power sources may be present. Failure to do so may cause property damage, personal injury or death.

WARNING

Installation and repair of this unit should be performed ONLY by individuals meeting the requirements of an "entry level technician", at a minimum, as specified by the Air-Conditioning, Heating and Refrigeration Institute (AHRI). Attempting to install or repair this unit without such background may result in product damage, personal injury or death.

WARNING

This product is factory-shipped for use with 208/240/1/60 electrical power supply. DO NOT reconfigure this air handler to operate with any other power supply.

WARNING

To avoid property damage, personal injury or death due to electrical shock, this unit MUST have an uninterrupted, unbroken electrical ground. The electrical ground circuit may consist of an appropriately sized electrical wire connecting the ground lug in the unit control box to the building electrical service panel.
Other methods of grounding are permitted if performed in accordance with the National Electric Code (NEC)/American National Standards Institute (ANSI)/National Fire Protection Association (NFPA) 70 and local/state codes. In Canada, electrical grounding is to be in accordance with the Canadian Electric Code (CSA) C22.1.

CAUTION

When installing or servicing this equipment, safety clothing, including hand and eye protection, is strongly recommended. If installing in an area that has special safety requirements (hard hats, etc.), observe these requirements.

WARNING

Do not connect to or use any device that is not design-certified by the manufacturer for use with this unit. Serious property damage, personal injury, reduced unit performance and/or hazardous conditions may result from the use of such non-approved devices.

WARNING

To prevent the risk of property damage, personal injury, or death, do not store combustible materials or use gasoline or other flammable liquids or vapors in the vicinity of this unit.

DANGER
PELIGRO

CARBON MONOXIDE POISONING HAZARD

Special Warning for Installation of Furnace or Air Handling Units in Enclosed Areas such as Garages, Utility Rooms or Parking Areas

Carbon monoxide producing devices (such as an automobile, space heater, gas water heater, etc.) should not be operated in enclosed areas such as unventilated garages, utility rooms or parking areas because of the danger of carbon monoxide (CO) poisoning resulting from the exhaust emissions. If a furnace or air handler is installed in an enclosed area such as a garage, utility room or parking area and a carbon monoxide producing device is operated therein, there must be adequate, direct outside ventilation.

This ventilation is necessary to avoid the danger of CO poisoning which can occur if a carbon monoxide producing device continues to operate in the enclosed area. Carbon monoxide emissions can be (re)circulated throughout the structure if the furnace or air handler is operating in any mode.

CO can cause serious illness including permanent brain damage or death. B10259-216

RIESGO DE INTOXICACIÓN POR MONÓXIDO DE CARBONO

Advertencia especial para la instalación de calentadores ó manejadoras de aire en áreas cerradas como estacionamientos ó cuartos de servicio.

Los equipos ó aparatos que producen monóxido de carbono (tal como automóvil, calentador de gas, calentador de agua por medio de gas, etc) no deben ser operados en áreas cerradas debido al riesgo de envenenamiento por monóxido de carbono (CO) que resulta de las emisiones de gases de combustión. Si el equipo ó aparato se opera en dichas áreas, debe existir una adecuada ventilación directa al exterior.

Esta ventilación es necesaria para evitar el peligro de envenenamiento por CO, que puede ocurrir si un dispositivo que produce monóxido de carbono sigue operando en el lugar cerrado.

Las emisiones de monóxido de carbono pueden circular a través del aparato cuando se opera en cualquier modo.

El monóxido de carbono puede causar enfermedades severas como daño cerebral permanente ó muerte. B10259-216

RISQUE D'EMPOISONNEMENT AU MONOXYDE DE CARBONE

Avertissement special au sujet de l'installation d'appareils de chauffage ou de traitement d'air dans des endroits clos, tets les garages, les locaux d'entretien et les stationnements.

Evitez de mettre en marche les appareils produisant du monoxyde de carbone (tels que les automobile, les appareils de chauffage autonome,etc.) dans des endroits non ventilés tels que les d'empoisonnement au monoxyde de carbone. Si vous devez faire fonctionner ces appareils dans un endroit clos, assures-vous qu'il y ait une ventilation directe provenant de l'exterier.

Cette ventilation est nécessaire pour éviter le danger d'intoxication au CO pouvant survenir si un appareil produisant du monoxyde de carbone continue de fonctionner au sein de la zone confinée.

Les émissions de monoxyde de carbone peuvent etre recircules dans les endroits clos, si l'appareil de chauffage ou de traitement d'air sont en marche.

Le monoxyde de carbone peut causer des maladies graves telles que des dommages permanents au cerveau et meme la mort. B10259-216

2 Shipping Inspection

Always transport the unit upright; laying the unit on its side or top during transit may cause equipment damage. The installer should inspect the product upon receipt for shipping damage and subsequent investigation is the responsibility of the carrier. The installer must verify the model number, specifications, electrical characteristics, and accessories are correct prior to installation. The distributor or manufacturer will not accept claims from dealers for transportation damage or installation of incorrectly shipped units.

2.1 Parts

Also inspect the unit to verify all required components are present and intact. Report any missing components immediately to the manufacturer or to the distributor. Use only factory authorized replacement parts (see Section 5). Make sure to include the full product model number and serial number when reporting and/or obtaining service parts.

2.2 Handling

Use caution when transporting/carrying the unit. Do not move unit using shipping straps. Do not carry unit with hooks or sharp objects. The preferred method of carrying the unit after arrival at the job site is to carry via a two-wheel hand truck from the back or sides or via hand by carrying at the cabinet corners.

3 Codes & Regulations

This product is designed and manufactured to comply with applicable national codes. Installation in accordance with such codes and/or prevailing local codes/regulations is the responsibility of the installer. The manufacturer assumes no responsibility for equipment installed in violation of any codes or regulations.

The United States Environmental Protection Agency (EPA) has issued various regulations regarding the introduction and disposal of refrigerants. Failure to follow these regulations may harm the environment and can lead to the imposition of substantial fines. Should you have any questions please contact the local office of the EPA and/or refer to EPA's website www.epa.gov.

4 Replacement Parts

When reporting shortages or damages, or ordering repair parts, give the complete product model and serial numbers as stamped on the product. Replacement parts for this product are available through your contractor or local distributor. For the location of your nearest distributor consult the white business pages, the yellow page section of the local telephone book or contact:

CONSUMER AFFAIRS
GOODMAN MANUFACTURING COMPANY, L.P.
7401 SECURITY WAY
HOUSTON, TEXAS 77040
(877) 254-4729

5 Pre-Installation Considerations

5.1 Preparation

Keep this document with the unit. Carefully read all instructions for the installation prior to installing product. Make sure each step or procedure is understood and any special considerations are taken into account before starting installation. Assemble all tools, hardware and supplies needed to complete the installation. Some items may need to be purchased locally. Make sure everything needed to install the product is on hand before starting.

5.2 System Matches

The entire system (combination of indoor and outdoor sections) must be manufacturer approved and Air-Conditioning, Heating, and Refrigeration Institute (AHRI) listed. **NOTE:** Installation of unmatched systems is not permitted and will void the product warranty.

5.3 Interconnecting Tubing

Give special consideration to minimize the length of refrigerant tubing when installing air handlers. Refer to Remote Cooling/Heat Pump Service Manual RS6200006, and TP-107 Long Line Set Application R-410A for tubing guidelines. If possible, allow adequate length of tubing such that the coil may be removed (for inspection or cleaning services) from the cabinet without disconnecting the tubing.

5.4 Clearances

The unit clearance from a combustible surface may be 0". However, service clearance must take precedence. A minimum of 24" in front of the unit for service clearance is required. Additional clearance on one side or top will be required for electrical wiring connections. Consult all appropriate regulatory codes prior to determining final clearances. When installing this unit in an area that may become wet (such as crawl spaces), elevate the unit with a sturdy, non-porous material. In installations that may lead to physical damage (i.e. a garage) it is advised to install a protective barrier to prevent such damage. Always install units such that a positive slope in condensate line (1/4" per foot) is allowed.

5.5 Horizontal Applications

If installed above a finished living space, a secondary drain pan (as required by many building codes), must be installed under the entire unit and its condensate drain line must be routed to a location such that the user will see the condensate discharge.

6 Installation Location

NOTE: These air handlers are designed for ***indoor installation only***.

The ARUF**14**, ARPT**14**, ASPT**14** and ASUF**14** product lines may be installed in one of the upflow, downflow, horizontal left or horizontal right orientations as shown in Figures 2, 3, 4 and 5. The unit may be installed in upflow or horizontal left orientation as shipped (refer to specific sections for more information).

Minor field modifications are necessary to convert to downflow or horizontal right as indicated in below sections.

6.1 Upflow Installation

No field modifications are mandatory however to obtain maximum efficiency, the horizontal drip shield must be removed.

Drip Shield Removal: Refer to Figure 1, remove the two (2) screws that secure the drip shield support brackets to the condensate collectors (one screw per side). Remove the two (2) screws that secure the drip shield to the drain pan. The drip shield and drip shield brackets may now be removed.

The bottom left drain connection is the primary drain for this application and condensate drain line must be attached to this drain connection. The top connection of the three drain connections on the drain pan must remain plugged for this application. The bottom right drain connection is for the secondary drain line (if used).

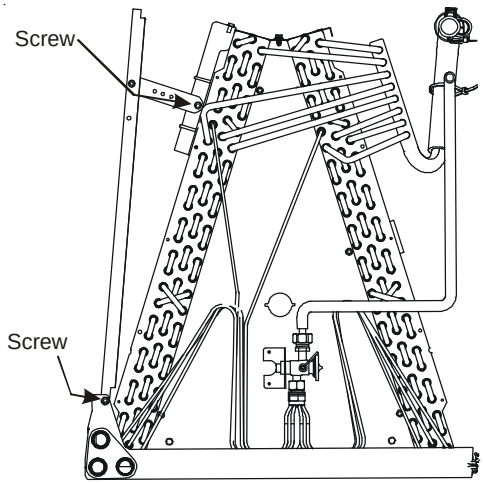

DRIP SHIELD REMOVAL

Figure 1

6.2 Horizontal Left Installation

No field modifications are permissible for this application.

The bottom right drain connection is the primary drain for this application and condensate drain line must be attached to this drain connection. The top connection of the three drain connections on the drain pan must remain plugged for this application. The bottom left drain connection is for the secondary drain line (if used).

In applications where the air handler is installed in the horizontal left position (←), and the return air environment see humidity levels above 65% relative humidity coupled with total external static levels above 0.5" e.s.p., a horizontal condensate management kit is available for field application. Kit nomenclature can be found in the table above and in the specification sheets.

MODEL LISTS FOR HORIZONTAL LEFT KITS	
CMK0001	ARPT36D14**, ARPT42D14**, ARUF48D14**, ARUF60D14**, ASPT42D14**
CMK0002	ARPT48D14**, ARPT60D14**, ASPT48D14**, ASPT60D14**, ASUF59D14**
CMK0003	ARPT36C14**, ARUF30C14**, ARUF36C14**, ARUF42C14**, ASPT30C14**, ASPT36C14**, ASUF39C14**, ASUF49C14**, ASPT42C14**, ASPT48C14**
CMK0004	ARPT18B14**, ARPT24B14**
CMK0005	ARUF18B14**
CMK0006	ARUF24B14**
CMK0007	ARPT30B14**, ARUF30B14**, ASPT24B14**, ASUF29B14**

6.3 Downflow/Horizontal Right Installation

IMPORTANT NOTE: In the downflow application, to prevent coil pan "sweating", a downflow kit (DFK) is available through your local distributor. The DFK is not supplied with the air handler and is required by the manufacturer on all downflow installations. See *Table 1* for the correct DFK and follow the instructions provided for installation.

Refer to Figure 6 and 7 for the location of the components referenced in the following steps.

1. Before inverting the air handler, remove blower access panel and coil access panel. The coil access panel and tubing panel may remain screwed together during this procedure. Remove and retain the seven (7) screws securing the coil access panel to the cabinet and the six (6) screws securing the blower access panel to the cabinet.
2. Slide the coil assembly out using the drain pan to pull the assembly from the cabinet.

MODEL LIST FOR DOWNFLOW KITS

DFK-B Downflow Kit	DFK-C Downflow Kit	DFK-D Downflow Kit
ARUF18B14**	ARUF30C14**	ARUF48D14**
ARUF24B14**	ARUF36C14**	ARUF60D14**
ARUF30B14**	ARUF42C14**	ARPT36D14**
ARPT18B14**	ARPT36C14**	ARPT42D14**
ARPT24B14**	ASPT30C14**	ARPT48D14**
ARPT30B14**	ASPT36C14**	ARPT60D14**
ASPT24B14**	ASPT42C14**	ASUF59D14**
ASUF29B14**	ASPT48C14**	ASPT42D14**
	ASUF39C14**	ASPT48D14**
	ASUF49C14**	ASPT60D14**

DOWNFLOW KIT
Table 1

NOTE: DO NOT USE MANIFOLDS OR FLOWRATOR TO PULL THE COIL ASSEMBLY OUT. FAILURE TO DO SO MAY RESULT IN BRAZE JOINT DAMAGE AND LEAKS.

3. Removal of the center support is required on units with 21" wide cabinet. Remove and retain the two (2) screws that secure the center support to the cabinet. Remove the center support.
4. Using the drain pan to hold the coil assembly, slide the coil assembly back into the cabinet on the downflow brackets as shown in Figure 8.
5. Re-install the center support (if removed) using the two (2) screws removed in Step 4.
6. Re-install the access panels removed in Step 1 as shown in Figure 9.
7. The bottom left drain connection is the primary drain for this application and condensate drain line must be attached to this drain connection. The top connection of the three drain connections on the drain pan must remain plugged for this application. The bottom left drain connection is for the secondary drain line (if used).

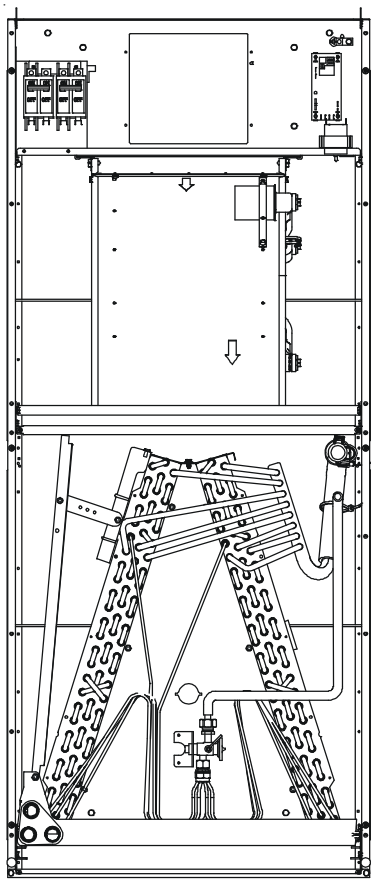

UPFLOW
Figure 2

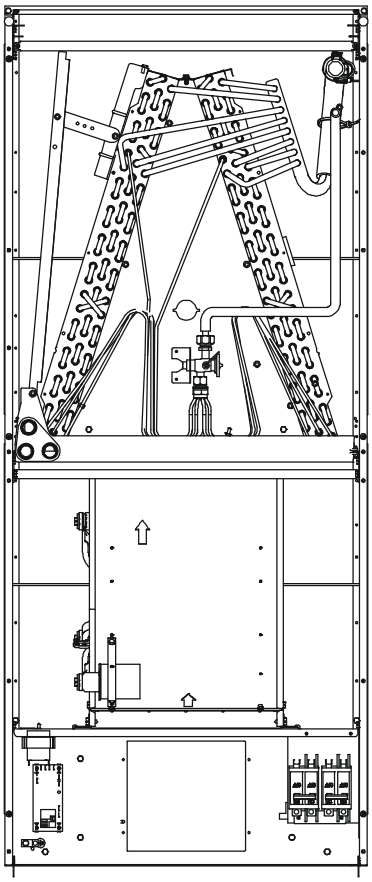

DOWNFLOW
Figure 3

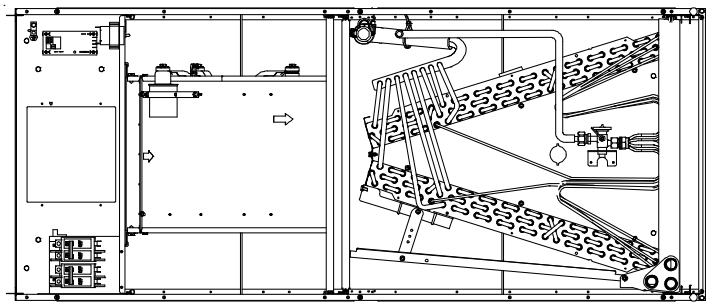

HORIZONTAL LEFT

Figure 4

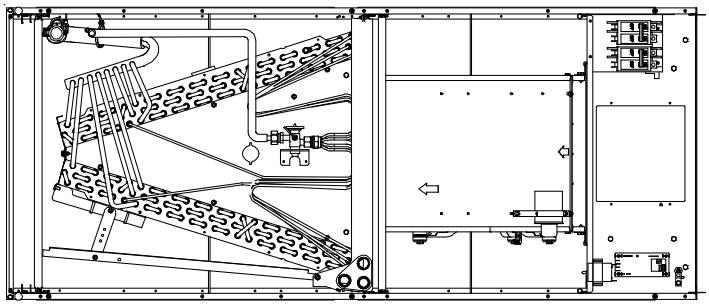

HORIZONTAL RIGHT

Figure 5

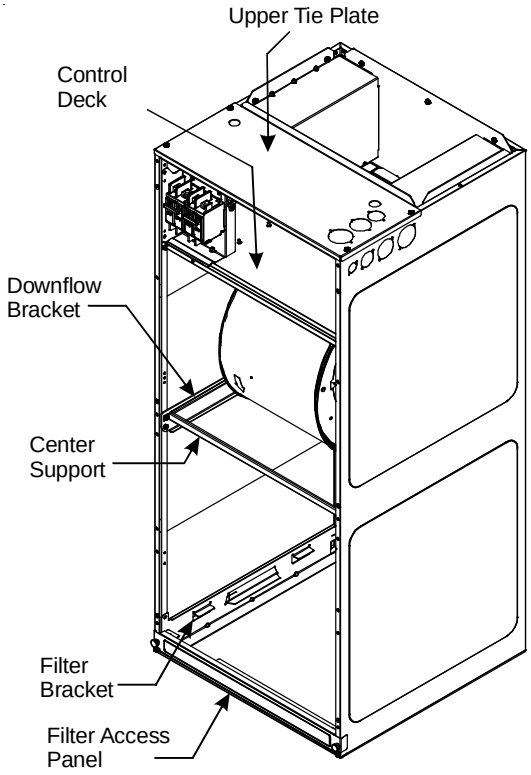

INTERNAL PART TERMINOLOGY

Figure 6

NOTE: If removing only the coil access panel from the unit, the filter access panel must be removed first. Failure to do so will result in panel damage.

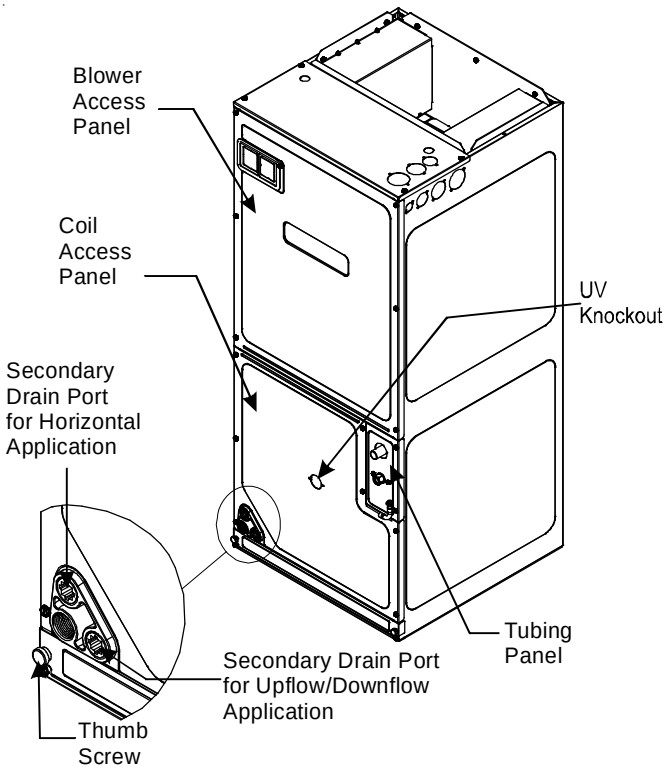

EXTERNAL PART TERMINOLOGY

Figure 7

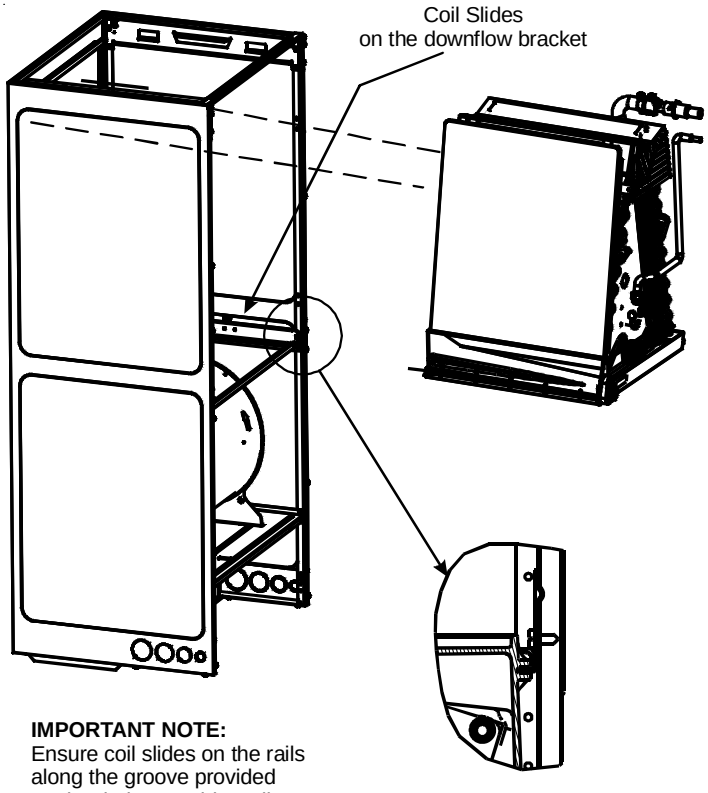

IMPORTANT NOTE:
Ensure coil slides on the rails along the groove provided on the drain pan side walls. Failure to do so will result in improper condensate drainage.

COIL INSTALLATION FOR DOWNFLOW

Figure 8

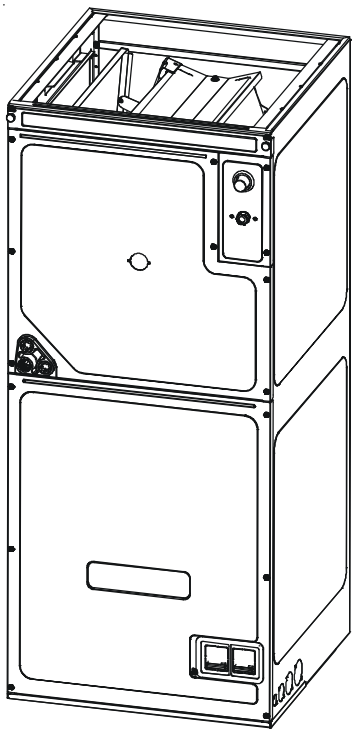

ACCESS PANEL CONFIGURATION
FOR DOWNFLOW
OR HORIZONTAL RIGHT

Figure 9

7 Refrigerant Lines

NOTE: Refrigerant tubing must be routed to allow adequate access for servicing and maintenance of the unit.

Do not install the air handler in a location that violates the instructions provided with the condenser. If the unit is located in an unconditioned area with high ambient temperature and/or high humidity, the air handler may be subject to nuisance sweating of the casing. On these installations, a wrap of 2" fiberglass insulation with a vapor barrier is recommended.

WARNING

This product is factory-shipped with R410A and dry nitrogen mixture gas under pressure. Use appropriate service tools and follow these instructions to prevent injury.

WARNING

A quenching cloth is strongly recommended to prevent scorching or marring of the equipment finish when brazing close to the painted surfaces. Use brazing alloy of 5% minimum silver content.

7.1 Tubing Size

For the correct tubing size, follow the specification for the condenser/heat pump.

7.2 Tubing Preparation

All cut ends are to be round, burr free, and clean. Failure to follow this practice increases the chances for refrigerant leaks. The suction line is spun closed and requires tubing cutters to remove the closed end.

NOTE: To prevent possible damage to the tubing joints, do not handle coil assembly with manifold or flowrator tubes. Always use clean gloves when handling coil assemblies.

CAUTION

Applying too much heat to any tube can melt the tube. Torch heat required to braze tubes of various sizes must be proportional to the size of the tube. Service personnel must use the appropriate heat level for the size of the tube being brazed.

7.3 Special Instructions

Units without a factory installed TXV come equipped with a flowrator piston for refrigerant expansion. For most installations with matching applications, no change to the flowrator piston is required. However, in mix-matched applications, a flowrator piston change may be required. See the piston kit chart (provided in the literature packet) or consult your local distributor for details regarding mix-matched flowrator piston sizing. If the mix-match application requires a different flowrator piston size, change the flowrator piston in the flowrator body on the indoor coil before installing the coil and use the procedure in section 8.4.

NOTE: The use of a heat shield is strongly recommended when brazing to avoid burning the serial plate or the finish of the unit. Heat trap or wet rags must be used to protect heat sensitive components such as service valves and TXV valves sensing bulb.

7.4 Tubing Connections for Flowrator Model

1. Loosen the 13/16 nut ***1 TURN ONLY*** to allow high pressure tracer gas to escape. No gas indicates a possible leak.
2. After the gas has been expelled, remove the nut and discard the black or brass cap plastic seal.
3. Remove the flowrator piston to verify it is the correct size for the outdoor unit being installed and then replace the piston (changing size, if needed). See piston kit chart in the literature kit for appropriate piston size.
4. Remove the spin closure on the suction line using a tube cutter and deburr the tube.
5. Insert the suction line into the connection, slide the insulation and the rubber grommet at least 18" away from the braze joint.
6. Remove the tailpiece clamped to the exterior of the cabinet or in the literature kit packet and **slide the 13/16 nut into place.**
7. Braze tailpiece to the line set liquid tube and braze suction line connection. Quench all brazed joints with a damp rag upon completion of brazing. Do not allow water to enter the inside of the tubing.
8. **AFTER THE TAILPIECE HAS COOLED**, confirm position of the white Teflon® seal and hand tighten the 13/16 nut.
9. Torque the 13/16 nut to 7-25 ft-lbs. or tighten 1/6 turn.

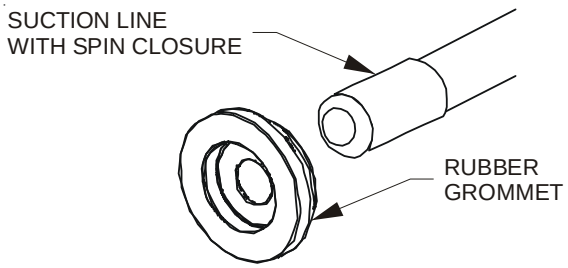

SUCTION SPUN END AND GROMMET

Figure 10

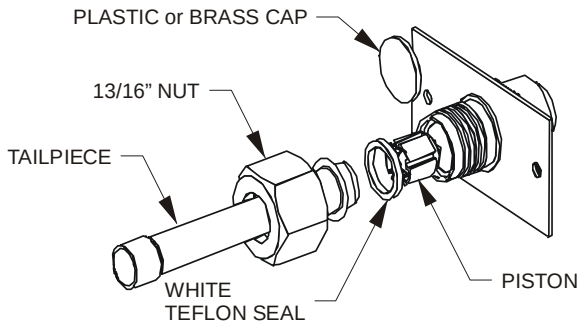

TAILPIECE JOINT

Figure 11

CAUTION

Excessive torque can cause orifices to stick. Use the proper torque settings when tightening orifices.

7.5 Tubing Connections for TXV Models

TXV models come with factory installed TXV with the bulb pre-installed on the vapor tube.

1. Remove refrigerant tubing panel or coil (lower) access panel.
2. Remove access valve fitting cap and depress the valve stem in access fitting to release pressure. No pressure indicates possible leak.
3. Replace the refrigerant tubing panel.
4. Remove the spin closure on both the liquid and suction tubes using a tubing cutter.
5. Insert liquid line set into liquid tube expansion and slide grommet about 18" away from braze joint.
6. Insert suction line set into suction tube expansion and slide insulation and grommet about 18" away from braze joint.
7. Braze joints. Quench all brazed joints with water or a wet rag upon completion of brazing.

8 Condensate Drain Lines

The coil drain pan has a primary and a secondary drain with 3/4" NPT female connections. The connectors required are 3/4" NPT male, either PVC or metal pipe, and should be hand tightened to a torque of no more than 37 in-lbs. to prevent damage to the drain pan connection. An insertion depth of approximately 3/8" to 1/2" (3-5 turns) should be expected at this torque.

1. Ensure drain pan hole is not obstructed.
2. To prevent potential sweating and dripping on to finished space, it may be necessary to insulate the condensate drain line located inside the building. Use Armaflex® or similar material.

A secondary condensate drain connection has been provided for areas where the building codes require it. Pitch all drain lines a minimum of 1/4" per foot to provide free drainage. Provide required support to the drain line to prevent bowing. If the secondary drain line is required, run the line separately from the primary drain and end it where condensate discharge can be easily seen.

NOTE: Water coming from secondary line means the coil primary drain is plugged and needs immediate attention.

Insulate drain lines located inside the building or above a finished living space to prevent sweating. Install a condensate trap to ensure proper drainage.

NOTE: When units are installed above ceilings, or in other locations where damage from condensate overflow may occur, it is **MANDATORY** to install a field fabricated auxiliary drain pan under the coil cabinet enclosure.

The installation must include a "P" style trap that is located as close as is practical to the evaporator coil. See **Figure 12** for details of a typical condensate line "P" trap.

NOTE: Trapped lines are required by many local codes. In the absence of any prevailing local codes, please refer to the requirements listed in the Uniform Mechanical Building Code.

CAUTION

If secondary drain is not installed, the secondary access must be plugged.

A drain trap in a **draw-through** application prevents air from being drawn back through the drain line during fan operation thus preventing condensate from draining, and if connected to a sewer line to prevent sewer gases from being drawn into the airstream during blower operation.

Field experience has shown condensate drain traps with an open vertical Tee between the air handler and the condensate drain trap can improve condensate drainage in some applications, but may cause excessive air discharge out of the open Tee. The manufacturer does not prohibit this type of drain but we also do not recommend it due to the resulting air leakage. Regardless of the condensate drain design used, it is the installer's responsibility to ensure the condensate drain system is of sufficient design to ensure proper condensate removal from the coil drain pan.

Use of a condensate removal pump is permitted when necessary. This condensate pump should have provisions for shutting off the control voltage should a blocked drain occur. A trap must be installed between the unit and the condensate pump.

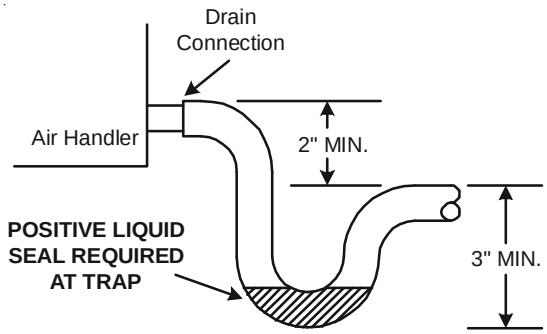

Figure 12

IMPORTANT NOTE: The evaporator coil is fabricated with oils that may dissolve styrofoam and certain types of plastics. Therefore, a removal pump or float switch must not contain any of these materials.

Tip: Priming the "P" trap may avoid improper draining at the initial installation and at the beginning of the cooling season.

9 Ductwork

This air handler is designed for a complete supply and return ductwork system.

To ensure correct system performance, the ductwork is to be sized to accommodate 350-450 CFM per ton of cooling with the static pressure not to exceed 0.5" in w.c. Refer to ACCA Manual D, Manual S and Manual RS for information on duct sizing and application. Flame retardant ductwork is to be used and sealed to the unit in a manner that will prevent leakage.

NOTE: A downflow application with electric heat must have an L-shaped sheet metal supply duct without any outlets or registers located directly below the heater.

9.1 Return Ductwork

DO NOT LOCATE THE RETURN DUCTWORK IN AN AREA THAT CAN INTRODUCE TOXIC, OR OBJECTIONABLE FUMES/ODORS INTO THE DUCTWORK. The return ductwork is to be connected to the air handler bottom (upflow configuration).

CAUTION

Do not operate this product without all the ductwork attached.

10 Return Air Filters

Each installation must include a return air filter. This filtering may be performed at the air handler using the factory filter rails or externally such as a return air filter grille. When using the factory filter rails, a nominal 16x20x1", 20x20x1" or 24x20x1" (actual dimension must be less than 23-½"x20") filter can be installed on a B, C and D cabinet respectively (the cabinet size is the seventh letter of the model number).

11 Electric Heat

Refer to the installation manual provided with the electric heat kit for the correct installation procedure. All electric heat must be field installed. If installing this option, the ONLY heat kits that are permitted to be used are the HKS series. Refer to the air handler unit's Serial and Rating plate or the HKS specification sheets to determine the heat kits compatible with a given air handler. No other accessory heat kit besides the HKS series may be installed in these air handlers.

The heating mode temperature rise is dependent upon the system airflow, the supply voltage, and the heat kit size (kW) selected. Use data provided in Tables 2, 3 and 4 to determine the temperature rise (°F).

NOTE: For installations not indicated above the following formula is to be used:

TR = (kW x 3412) x (Voltage Correction) / (1.08XCFM)

Where:	TR	=	Temperature Rise
	kW	=	Heater Kit Actual kW
	3412	=	Btu per kW
	VC*	=	.96 (230 Supply Volts)
		=	.92 (220 Supply Volts)
		=	.87 (208 Supply Volts)
	1.08	=	Constant
	CFM	=	Measured Airflow

**VC (Voltage Correction)*

NOTE: The Temperature Rise Tables can also be used to estimate the air handler airflow delivery. When using these tables for this purpose set the room thermostat to maximum heat and allow the system to reach steady state conditions. Insert two thermometers, one in the return air and one in the supply air. The temperature rise is the supply air temperature minus the room air temperature. Using the temperature rise calculated, CFM can be estimated from the TR formula above. See Technical Manual and/or Service Manual for more information.

CFM	HEAT KIT NOMINAL kW							
	3	5	6	8	10	15	19/20	25
800	12	19	23	31	37			
1000	9	15	19	25	30	44		
1200	8	12	15	21	25	37	49	62
1400	7	11	13	18	21	32	42	53
1600	6	9	12	15	19	28	37	46
1800	5	8	10	14	16	25	33	41
2000	5	7	9	12	15	22	30	37

230/1/60 SUPPLY VOLTAGE - TEMP. RISE °F

Table 2

CFM	HEAT KIT NOMINAL kW							
	3	5	6	8	10	15	19/20	25
800	11	18	22	30	35			
1000	9	14	18	24	28	42		
1200	7	12	15	20	24	35	47	59
1400	6	10	13	17	20	30	40	51
1600	6	9	11	15	18	27	35	44
1800	5	8	10	13	16	24	31	39
2000	4	7	9	12	14	21	28	35

220/1/60 SUPPLY VOLTAGE - TEMP. RISE °F

Table 3

CFM	HEAT KIT NOMINAL kW							
	3	5	6	8	10	15	19/20	25
800	10	17	21	28	33			
1000	8	13	17	22	27	40		
1200	7	11	14	19	22	33	45	56
1400	6	10	12	16	19	29	38	48
1600	5	8	10	14	17	25	33	42
1800	5	7	9	12	15	22	30	37
2000	4	7	8	11	13	20	27	33

208/1/60 SUPPLY VOLTAGE - TEMP. RISE °F

Table 4

*ARUF ARPT	HEATER (Kw)								
	3	5	6	8	10	15	19	20	25
18	715	715	715	715	950				
24	715	715	715	715	950				
30B	715	715	715	715	875	875			
30C		1170	1170	1170	1170	1345	1345		
36		1170	1170	1170	1170	1345	1345		
42		1170	1170	1170	1170	1345	1345		
48		1590	1590	1590	1590	1715		1715	1715
60		1590	1590	1590	1590	1715		1715	1715

Table applies to ARUF14**, ARPT**14***

Table 5

*ASPT	HEATER (Kw)								
	3	5	6	8	10	15	19	20	25
24	715	715	715	715	875				
30	715	715	715	715	950				
36		1170	1170	1170	1170	1345	1345	1345	
42C		1170	1170	1170	1170	1345	1345	1345	
48C		1170	1170	1170	1170	1345	1345	1345	
42D		1590	1590	1590	1590	1715		1715	
48D		1590	1590	1590	1590	1715		1715	1715
60		1590	1590	1590	1590	1715		1715	1715

Table applies to ASPT14***

Table 6

*ASUF	HEATER (Kw)								
	3	5	6	8	10	15	19	20	25
29	715	715	715	715	875				
39		1170	1170	1170	1170	1345	1345		
49		1170	1170	1170	1170	1345	1345		
59		1590	1590	1590	1590	1715		1715	1715

Table applies to ASUF14***

Table 7

MINIMUM CFM REQUIRED FOR HEATER KITS

12 Electrical and Control Wiring

IMPORTANT: All routing of electrical wiring must be made through provided electrical knockouts. Do not cut, puncture or alter the cabinet for electrical wiring.

12.1 Building Electrical Service Inspection

This unit is designed for single-phase electrical supply only. DO NOT OPERATE ON A THREE-PHASE POWER SUPPLY. Measure the power supply to the unit. The supply voltage **must** be measured and be in agreement with the unit nameplate power requirements and within the range shown.

Nominal Input	Minimum Voltage	Maximum Voltage
208-240	197	253

ELECTRICAL VOLTAGE

Table 8

12.2 Wire Sizing

Wire size is important to the operation of your equipment. Use the following check list when selecting the appropriate wire size for your unit.

- **Wire used must carry the Minimum Circuit Ampacity (MCA) listed on the unit's Series and Rating Plate.**
- Refer to the NEC (USA) or CSA (Canada) for wire sizing. The unit MCA for the air handler and the optional electric heat kit can be found on the unit Series and Rating Plate.
- **Wire must be sized to allow no more than a 2% voltage drop from the building breaker/fuse panel to the unit.**
- Wires with different insulation temperature rating have varying ampacities - be sure to check the temperature rating used.

Refer to the latest edition of the National Electric Code or in Canada the Canadian Electric Code when determining the correct wire size.

12.3 Maximum Overcurrent Protection (MOP)

Every installation must include an NEC (USA) or CEC (Canada) approved overcurrent protection device. Also, check with local or state codes for any special regional requirements.

Protection can be in the form of fusing or HACR style circuit breakers. The Series and Rating Plate provides the maximum overcurrent device permissible.

NOTE: Fuses or circuit breakers are to be sized larger than the equipment MCA but not to exceed the MOP.

CAUTION

FIRE HAZARD!
To avoid the risk of property damage, personal injury or fire, use only copper conductors.

WARNING

HIGH VOLTAGE!
Disconnect ALL power before servicing. Multiple power sources may be present. Failure to do so may cause property damage, personal injury or death.

WARNING

HIGH VOLTAGE!
To avoid property damage, personal injury or death due to electrical shock, this unit MUST have an <u>uninterrupted, unbroken</u> electrical ground. The electrical ground circuit may consist of an appropriately sized electrical wire connecting the ground lug in the unit control box to the building electrical service panel.
Other methods of grounding are permitted if performed in accordance with the National Electric Code (NEC)/American National Standards Institute (ANSI)/National Fire Protection Association (NFPA) 70 and local/state codes. In Canada, electrical grounding is to be in accordance with the Canadian Electric Code (CSA) C22.1.

12.4 Electrical Connections – Supply Voltage

IMPORTANT NOTE: USE COPPER CONDUCTORS ONLY.

Knockouts are provided on the air handler top panel and sides of the cabinet to allow for the entry of the supply voltage conductors, as shown in Figure 13. If the knockouts on the cabinet sides are used for electrical conduit, an adapter ring must be used in order to meet UL1995 safety requirements. An NEC or CEC approved strain relief is to be used at this entry point. Some codes/municipalities require the supply wire to be enclosed in conduit. Consult your local codes.

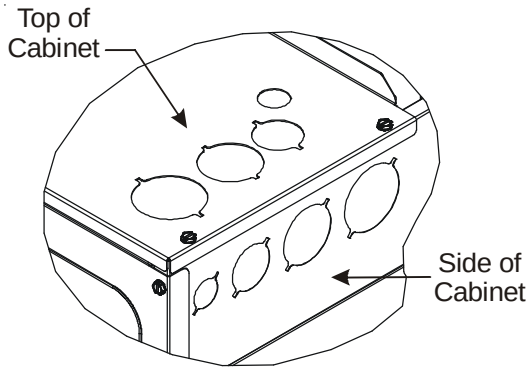

KNOCK-OUT FOR ELECTRICAL CONNECTIONS

Figure 13

<u>12.4.1 Air Handler Only (Non-Heat Kit Models)</u>

The building supply connects to the stripped black and red wires contained in the air handler electrical compartment cavity. A ground screw is also contained in this area. Attach the Supply wires to the air handler conductors as shown in the unit wiring diagram using appropriately sized solderless connectors or other NEC or CEC approved means.

<u>12.4.2 Air Handler - Non-Circuit Breaker Heat Kits</u>

A terminal block is provided with the HKS kit to attach the power supply and air handler connections. Follow the HKS Installation Manual and wiring diagram for complete wiring details.

<u>12.4.3 Air Handler With Circuit Breaker Heat Kit</u>

The air handler has a plastic cover on the upper access panel that will require either one or both sections to be removed to allow the heat kit circuit breaker(s) to be installed. The circuit breakers have lugs for power supply connection. See the HKS Installation Instructions for further details.

12.5 Low Voltage Connections

Several combinations of low voltage schemes are possible, depending on the presence of a heat kit and whether the heat kit is single-stage or multi-stage, whether the outdoor section is an air conditioner or heat pump, and whether the outdoor section is single-stage or two-stage. The 24V-control voltage connects the air handler to the room thermostat and condenser. Low voltage wiring must be copper conductors. A minimum of 18AWG must be used for installations up to 100 feet. Low voltage wiring must be connected through the top of the cabinet or either side. See the "Thermostat Wiring" section of this manual for typical low voltage wiring connections.

12.5.1 Thermostats

Second-stage heat can be accomplished by a multi-stage heating thermostat or the addition of an outdoor thermostat as shown in wiring schematics on pages 14 and 15. Follow the thermostat manufacturer's instructions for installation.

12.6 Speed Tap Adjustment

ARUF**14** and ARPT**14** air handlers have multi-speed PSC motors. The color of the wire coming from the motor to the "COM" terminal on the control board defines at which speed the motor will operate. Black wire is high speed, blue wire is medium speed and red wire is low speed. To change speeds, remove the wire attached to the "COM" terminal on the control board, and swap it with the wire (on terminal "M1" or "M2") with the color that will give the desired speed.

ASPT**14** and ASUF**14** air handlers feature energy efficient blower motors. The motors run at a constant torque with very low power consumption and are energized by 24 VAC. Adjust the CFM by changing the 24 VAC leads to the desired speed tap on the terminal block. The ASPT blower motor speeds are programmed to deliver adequate airflow at rated external static pressure and with 60 second off time delay. For details, refer to the specification sheet applicable to your model.

NOTE: In some models, not all speed taps are allowable for certain electric heat applications. Refer to air handler Series and Ratings plate for minimum speed.

13 Achieving 2% Low Leakage Rate

Ensure all the gaskets remain intact on all surfaces as shipped with the unit. These surfaces are areas between the upper tie plate and coil access panel, blower access and coil access panels, and between the coil access and filter access panels. Ensure upon installation, that the plastic breaker cover is sitting flush on the blower access panel and all access panels are flush with each other and the cabinet. With these requirements satisfied, the unit achieves less than 2% airflow leakage when tested in accordance with ASHRAE Standard 193.

14 Start-Up Procedure

- Prior to start-up, ensure that all electrical wires are properly sized and all connections are properly tightened.
- All panels must be in place and secured. For Air Tight application, gasket must be positioned at prescribed locations to achieve 2% leakage.
- Tubing must be leak free.
- Condensate line must be trapped and pitched to allow for drainage.
- Low voltage wiring is properly connected.
- Auxiliary drain is installed when necessary and pitched to allow for drainage.
- Unit is protected from vehicular or other physical damage.
- Return air is not obtained from, nor are there any return air duct joints that are unsealed in, areas where there may be objectionable odors, flammable vapors or products of combustion such as carbon monoxide (CO), which may cause serious personal injury or death.

15 Regular Maintenance

The only item required to be maintained on a regular basis by the user is the circulating air filter(s). Filter should be cleaned or replaced regularly, typically once per month. A certified service technician must perform all other services.

IMPORTANT NOTE: If thumb screws are used to access the filter, ensure the washer installed on the screw behind the access panel remains in place after re-installation.

WARNING

HIGH VOLTAGE!
Disconnect ALL power before servicing or installing this unit. Multiple power sources may be present. Failure to do so may cause property damage, personal injury or death.

16 Airflow Data

Model Number	Blower Speed	Static Pressure (in w.c)						
		0.1	0.2	0.3	0.4	0.5	0.6	0.7
ARUF18B14*	High	1150	1095	1045	1025	950	865	775
	Medium	890	855	835	775	715	665	605
	Low	640	605	565	530	485	440	360
ARUF24B14*	High	1150	1095	1045	1025	950	865	775
	Medium	890	855	835	775	715	665	605
	Low	640	605	565	530	485	440	360
ARUF30B14*	High	1145	1085	1020	950	900	845	765
	Medium	870	820	775	745	705	655	580
	Low	615	585	565	535	490	435	345
ARUF30C14*	High	1485	1435	1385	1345	1275	1205	1125
	Medium	1300	1270	1235	1195	1130	1060	955
	Low	1040	1015	980	930	865	790	705
ARUF36C14*	High	1485	1435	1385	1345	1275	1205	1125
	Medium	1300	1270	1235	1195	1130	1060	955
	Low	1040	1015	980	930	865	790	705
ARUF42C14AA	High	1580	1530	1465	1400	1330	1255	1165
	Medium	1395	1340	1290	1235	1170	1095	1000
	Low	1095	1045	1000	950	895	820	725
ARUF42C14AB	High	1655	1590	1515	1430	1340	1225	1080
	Medium	1435	1370	1300	1220	1150	1025	925
	Low	1115	1040	995	930	845	770	675
ARUF48D14*	High	1990	1915	1810	1765	1690	1585	1435
	Medium	1655	1605	1555	1480	1295	1200	1060
	Low	1480	1420	1350	1290	1185	1100	1045
ARUF60D14*	High	2235	2175	2125	2050	1960	1825	1720
	Medium	2030	1970	1885	1800	1690	1600	1495
	Low	1615	1535	1455	1355	1270	1185	1090

AIRFLOW DATA (CFM) FOR ARUF**14** MODELS

Table 9

Model Number	Blower Speed	Static Pressure (in w.c)						
		0.1	0.2	0.3	0.4	0.5	0.6	0.7
ARPT18B14	High	1185	1125	1065	1010	985	910	780
	Medium	900	850	825	785	715	670	610
	Low	630	605	560	525	495	445	355
ARPT24B14	High	1185	1125	1065	1010	985	910	780
	Medium	900	850	825	785	715	670	610
	Low	630	605	560	525	495	445	355
ARPT30B14	High	1145	1085	1020	950	900	845	765
	Medium	870	820	775	745	705	655	580
	Low	615	585	565	535	490	435	345
ARPT36C14	High	1580	1515	1445	1395	1345	1240	1155
	Medium	1385	1350	1300	1250	1170	1095	1005
	Low	1260	1205	1175	1105	1040	975	865
ARPT36D14	High	1815	1770	1705	1640	1555	1450	1355
	Medium	1580	1525	1485	1420	1350	1275	1165
	Low	1220	1180	1140	1085	1030	950	865
ARPT42D14	High	1990	1915	1810	1765	1690	1585	1435
	Medium	1655	1605	1555	1480	1295	1200	1060
	Low	1480	1420	1350	1290	1185	1100	1045
ARPT48D14	High	1960	1905	1845	1780	1715	1645	1570
	Medium	1600	1545	1495	1435	1360	1290	1215
	Low	1395	1340	1280	1220	1150	1090	1020
ARPT60D14	High	2205	2140	2080	2010	1945	1870	1795
	Medium	1985	1935	1865	1815	1755	1695	1635
	Low	1600	1555	1505	1455	1405	1345	1295

AIRFLOW DATA (CFM) FOR ARPT**14** MODELS

Table 10

Notes:
- Airflow data indicated is 230V without air filter in place.
- The chart is for information only. For satisfactory operation, external static pressure must not exceed value shown on rating plate. The shaded area indicates ranges in excess of maximum design external static pressure.
- Use the CFM adjustment factors of 0.98 for horizontal left and 0.96 for horizontal right & downflow orientations.

Airflow Data

Model Number	Blower Speed Tap	Static Pressure (in w.c)									
		0.1	0.2	0.3	0.4	0.5	0.6	0.7	0.8	0.9	1.0
ASPT24B14	1	570	540	520	480	450	415	370	305	270	240
	2	650	605	600	570	530	500	460	425	380	330
	3	740	690	660	650	615	570	525	480	440	405
	4	855	810	775	755	750	720	690	650	620	575
	5	1050	1005	975	940	910	900	885	880	845	820
ASPT30C14	1	610	580	540	445	390	330	285	240	205	160
	2	705	670	625	570	545	465	425	385	325	270
	3	785	740	720	660	640	580	515	475	440	370
	4	880	845	810	805	740	700	660	595	550	515
	5	1450	1440	1400	1380	1350	1330	1295	1275	1245	1205
ASPT36C14	1	960	905	890	810	760	720	665	620	550	485
	2	1060	1010	995	920	875	835	790	745	690	615
	3	1150	1100	1090	1025	990	945	905	860	810	750
	4	1250	1220	1205	1145	1110	1070	1035	990	940	885
	5	1470	1440	1425	1405	1375	1260	1315	1280	1245	1205
ASPT42C14	1	950	925	865	815	730	675	660	600	545	---
	2	1075	1025	980	930	875	785	730	690	650	---
	3	1160	1115	1070	1025	975	905	815	770	715	---
	4	1275	1235	1190	1145	1100	1040	975	875	835	---
	5	1600	1560	1520	1480	1430	1390	1345	1290	1245	---
ASPT48C14	1	1365	1305	1275	1225	1175	1110	1070	1020	995	---
	2	1490	1455	1405	1360	1305	1255	1205	1160	1115	---
	3	1580	1540	1500	1455	1400	1350	1300	1260	1210	---
	4	1670	1635	1585	1545	1495	1445	1395	1365	1315	---
	5	1750	1715	1680	1645	1590	1530	1495	1460	1410	---
ASPT42D14	1	1230	1180	1110	1060	1000	945	885	810	745	685
	2	1365	1310	1250	1190	1140	1090	1030	980	920	855
	3	1460	1410	1355	1305	1255	1210	1155	1115	1060	1010
	4	1545	1490	1440	1375	1330	1295	1245	1200	1150	1100
	5	1865	1825	1780	1745	1695	1645	1610	1570	1520	1475
ASPT48D14	1	1370	1320	1250	1120	1140	1110	1060	1010	940	865
	2	1500	1455	1400	1360	1310	1265	1215	1165	1120	1090
	3	1610	1565	1515	1475	1435	1395	1345	1300	1255	1210
	4	1725	1680	1635	1590	1550	1510	1475	1435	1390	1315
	5	1905	1865	1825	1780	1740	1705	1665	1630	1595	1550
ASPT60D14	1	1485	1425	1400	1325	1270	1220	1165	1115	1080	1005
	2	1675	1625	1600	1530	1485	1435	1390	1345	1295	1245
	3	1820	1770	1745	1685	1640	1595	1555	1510	1470	1420
	4	2060	2010	1995	1925	1880	1845	1800	1760	1720	1680
	5	2225	2180	2160	2085	2060	2010	1970	1930	1895	1850

AIRFLOW DATA (CFM) FOR ASPT**14** MODELS

Table 11

Model Number	Blower Speed Tap	Static Pressure (in w.c)									
		0.1	0.2	0.3	0.4	0.5	0.6	0.7	0.8	0.9	1
ASUF29B14	1	570	540	520	480	450	415	370	305	270	240
	2	650	605	600	570	530	500	460	425	380	330
	3	740	690	660	650	615	570	525	480	440	405
	4	855	810	775	755	750	720	690	650	620	575
	5	1050	1005	975	940	910	900	885	880	845	820
ASUF39C14	1	960	905	890	810	760	720	665	620	550	485
	2	1060	1010	995	920	875	835	790	745	690	615
	3	1150	1100	1090	1025	990	945	905	860	810	750
	4	1250	1220	1205	1145	1110	1070	1035	990	940	885
	5	1470	1440	1425	1405	1375	1260	1315	1280	1245	1205
ASUF49C14	1	1425	1405	1375	1340	1305	1265	1215	1155	1115	1070
	2	1560	1545	1525	1490	1455	1410	1380	1325	1275	1225
	3	1670	1645	1620	1595	1550	1520	1485	1445	1405	1350
	4	1760	1745	1715	1685	1655	1625	1585	1550	1515	1470
	5	1845	1820	1800	1775	1740	1705	1675	1640	1605	1575
ASUF59D14	1	1485	1425	1400	1325	1270	1220	1165	1115	1080	1005
	2	1675	1625	1600	1530	1485	1435	1390	1345	1295	1245
	3	1820	1770	1745	1685	1640	1595	1555	1510	1470	1420
	4	2060	2010	1995	1925	1880	1845	1800	1760	1720	1680
	5	2225	2180	2160	2085	2060	2010	1970	1930	1895	1850

AIRFLOW DATA (CFM) FOR ASUF**14** MODELS

Table 12

Notes:
- Airflow data indicated is 230V without air filter in place.
- The chart is for information only. For satisfactory operation, external static pressure must not exceed value shown on rating plate. The shaded area indicates ranges in excess of maximum design external static pressure.
- Use the CFM adjustment factors of 0.98 for horizontal left and 0.96 for horizontal right & downflow orientations.

Air Handler Low Voltage Connections

The following composite wiring diagrams detail various configurations in which the air handlers can be used. Examples include single-stage cooling and heat pump with single or two-stage electric heating. All these configurations can be applied with convenient connections to outdoor thermostat applications.

The following sections are detailed:

- Single-Stage Cooling
- Heat Pump

Each diagram details the connections between room thermostat and the air handlers, and the connections between the air handlers and the Condensing Unit (or Heat Pump) with optional connections to Outdoor Thermostats. For each configuration, refer to the explanation of the proper jumper(s) to remove for the corresponding blower speed that will result in the programmed fixed speed ECM motor.

IMPORTANT: WHEN MATCHING THE ASPT AIR HANDLERS TO A SINGLE SPEED COOLING OR HEAT PUMP UNIT, REMEMBER TO CONNECT "Y" FROM THE THERMOSTAT TO THE "Y2" ON THE LOW VOLTAGE TERMINAL BOARD.

An equivalent thermostat can be used in place of the manufacturer's thermostat part number.

NOTE: Some models feature low voltage wires and do not include a terminal block. For those applications use the corresponding colored wires.

WARNING **HIGH VOLTAGE! DISCONNECT ALL POWER BEFORE SERVICING. MULTIPLE POWER SOURCES MAY BE PRESENT. FAILURE TO DO SO MAY CAUSE PROPERTY DAMAGE, PERSONAL INJURY OR DEATH.**

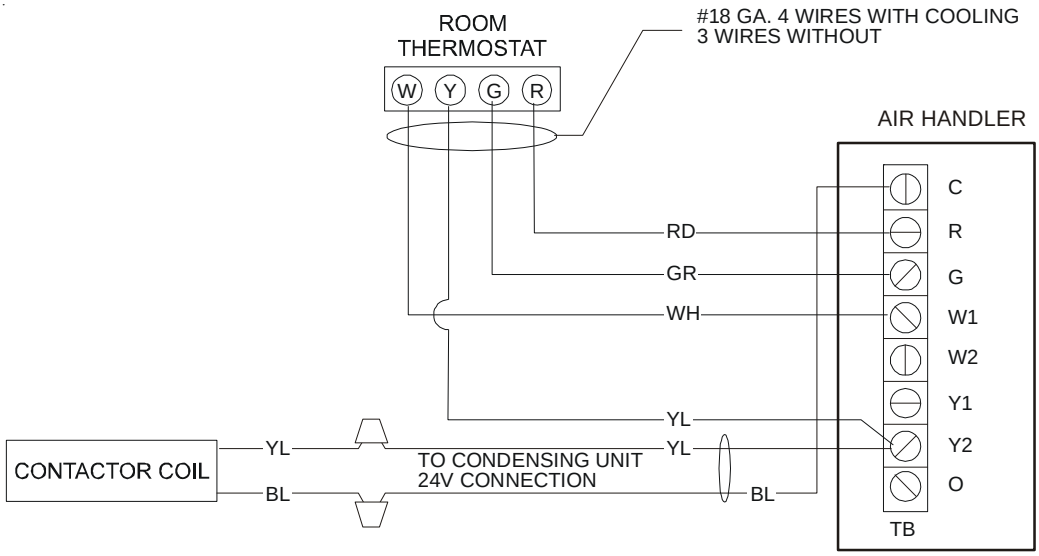

COOLING UNIT WITH OPTIONAL HEAT KITS OF 10 kW AND BELOW

NOTES:

1) OUTDOOR THERMOSTAT (OT-1) SHOULD BE THE FIRST TO CLOSE AND THE LAST TO OPEN.
2) JUMPER W1 AND W2 TOGETHER IF OT-2 IS NOT USED.
3) REMOVE WIRE WHEN USING OUTDOOR THERMOSTAT.

NOMENCLATURE:

OT - OUTDOOR THERMOSTAT (OPTIONAL)
EHR - EMERGENCY HEAT RELAY (OPTIONAL)

COLOR CODES

RD - RED
YL - YELLOW
BL - BLUE
BR - BROWN
OR - ORANGE
WH - WHITE

Wiring is subject to change. Always refer to the wiring diagram on the unit for the most up-to-date wiring.

WARNING **HIGH VOLTAGE! DISCONNECT ALL POWER BEFORE SERVICING. MULTIPLE POWER SOURCES MAY BE PRESENT. FAILURE TO DO SO MAY CAUSE PROPERTY DAMAGE, PERSONAL INJURY OR DEATH.**

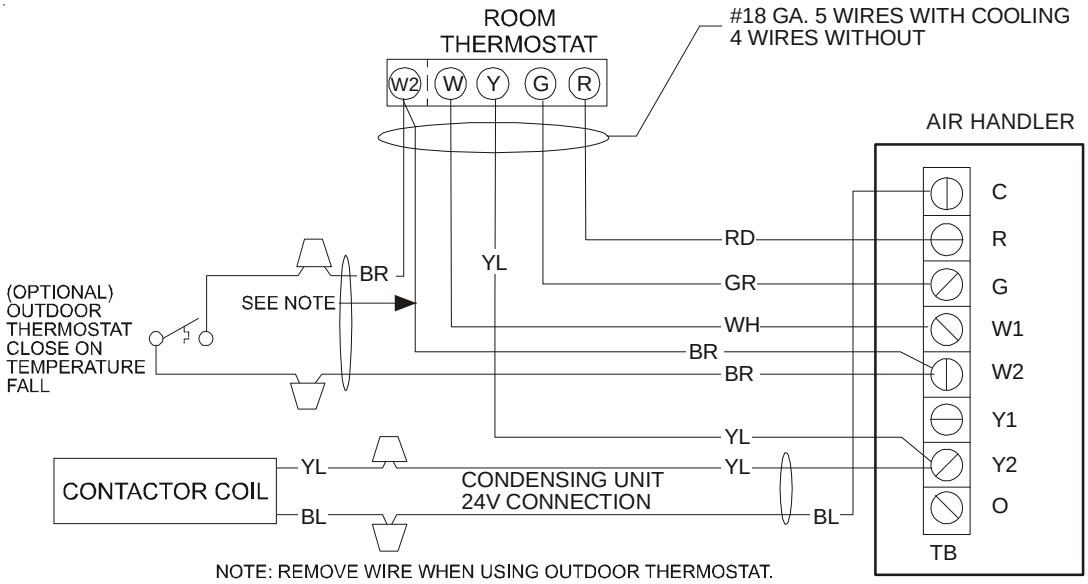

COOLING UNIT WITH OPTIONAL HEAT KITS OF 15 kW AND ABOVE AND ROOM THERMOSTAT WITH TWO STAGES OF HEAT

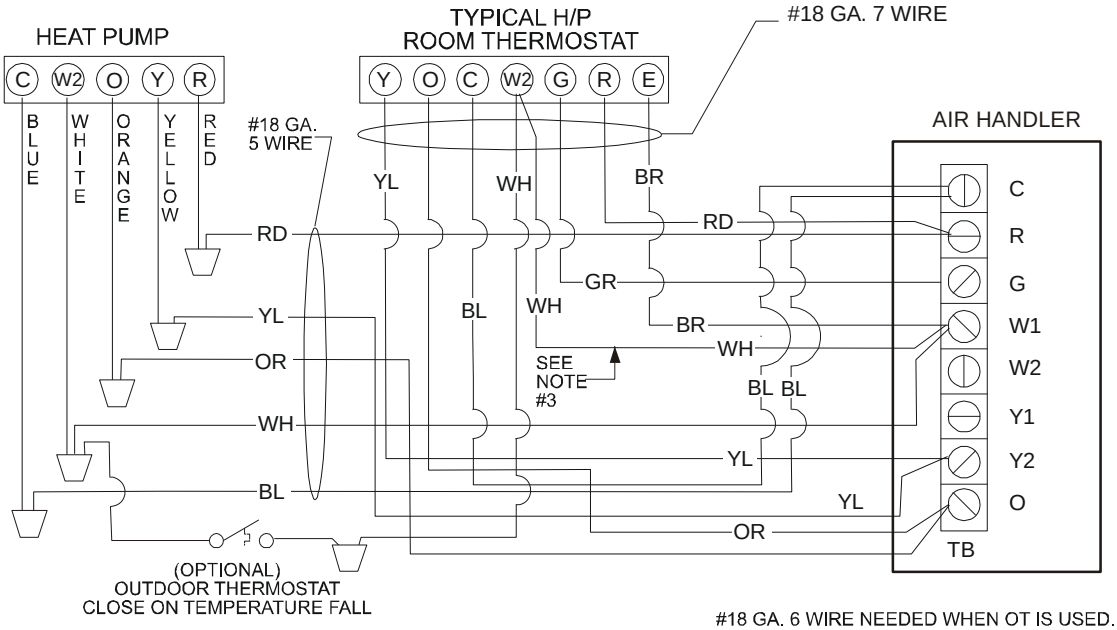

HEAT PUMP UNIT WITH OPTIONAL HEAT KITS OF 10 kW AND BELOW

NOTES:

1) OUTDOOR THERMOSTAT (OT-1) SHOULD BE THE FIRST TO CLOSE AND THE LAST TO OPEN.
2) JUMPER W1 AND W2 TOGETHER IF OT-2 IS NOT USED.
3) REMOVE WIRE WHEN USING OUTDOOR THERMOSTAT.

NOMENCLATURE:

OT - OUTDOOR THERMOSTAT (OPTIONAL)
EHR - EMERGENCY HEAT RELAY (OPTIONAL)

COLOR CODES

RD - RED
YL - YELLOW
BL - BLUE
BR - BROWN
OR - ORANGE
WH - WHITE

Wiring is subject to change. Always refer to the wiring diagram on the unit for the most up-to-date wiring.

WARNING **HIGH VOLTAGE! DISCONNECT ALL POWER BEFORE SERVICING. MULTIPLE POWER SOURCES MAY BE PRESENT. FAILURE TO DO SO MAY CAUSE PROPERTY DAMAGE, PERSONAL INJURY OR DEATH.**

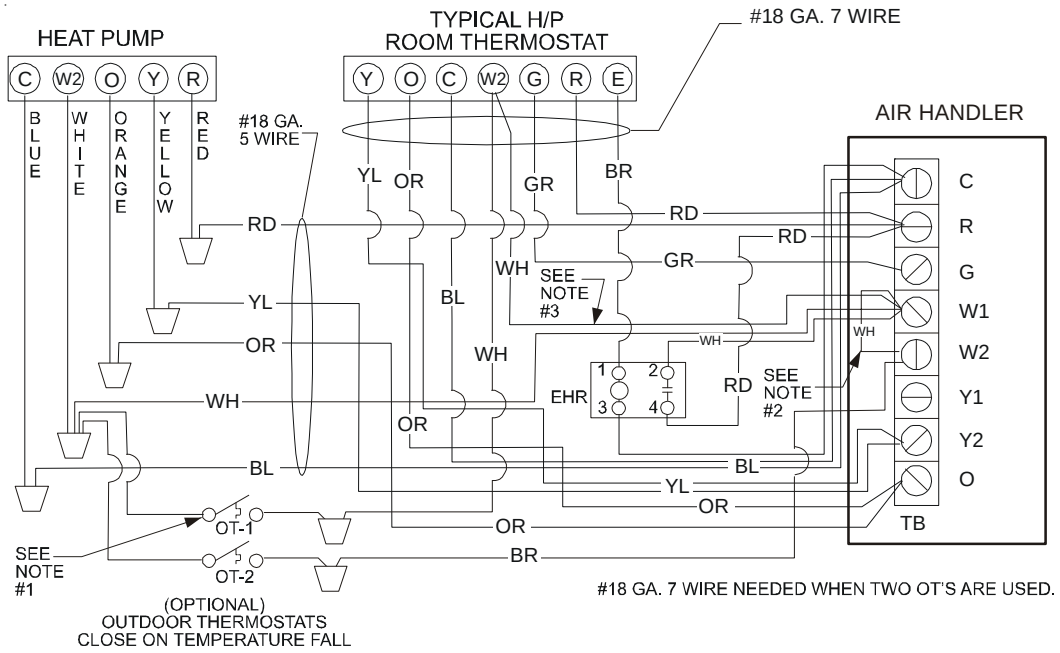

HEAT PUMP UNIT WITH OPTIONAL HEAT KITS OF 15 kW AND ABOVE

NOTES:

1) OUTDOOR THERMOSTAT (OT-1) SHOULD BE THE FIRST TO CLOSE AND THE LAST TO OPEN.
2) JUMPER W1 AND W2 TOGETHER IF OT-2 IS NOT USED.
3) REMOVE WIRE WHEN USING OUTDOOR THERMOSTAT.

NOMENCLATURE:

OT - OUTDOOR THERMOSTAT (OPTIONAL)
EHR - EMERGENCY HEAT RELAY (OPTIONAL)

COLOR CODES

RD - RED
YL - YELLOW
BL - BLUE
BR - BROWN
OR - ORANGE
WH - WHITE

Wiring is subject to change. Always refer to the wiring diagram on the unit for the most up-to-date wiring.

WARNING **HIGH VOLTAGE! DISCONNECT ALL POWER BEFORE SERVICING. MULTIPLE POWER SOURCES MAY BE PRESENT. FAILURE TO DO SO MAY CAUSE PROPERTY DAMAGE, PERSONAL INJURY OR DEATH.**

ELECTRONIC BLOWER TIME DELAY RELAY

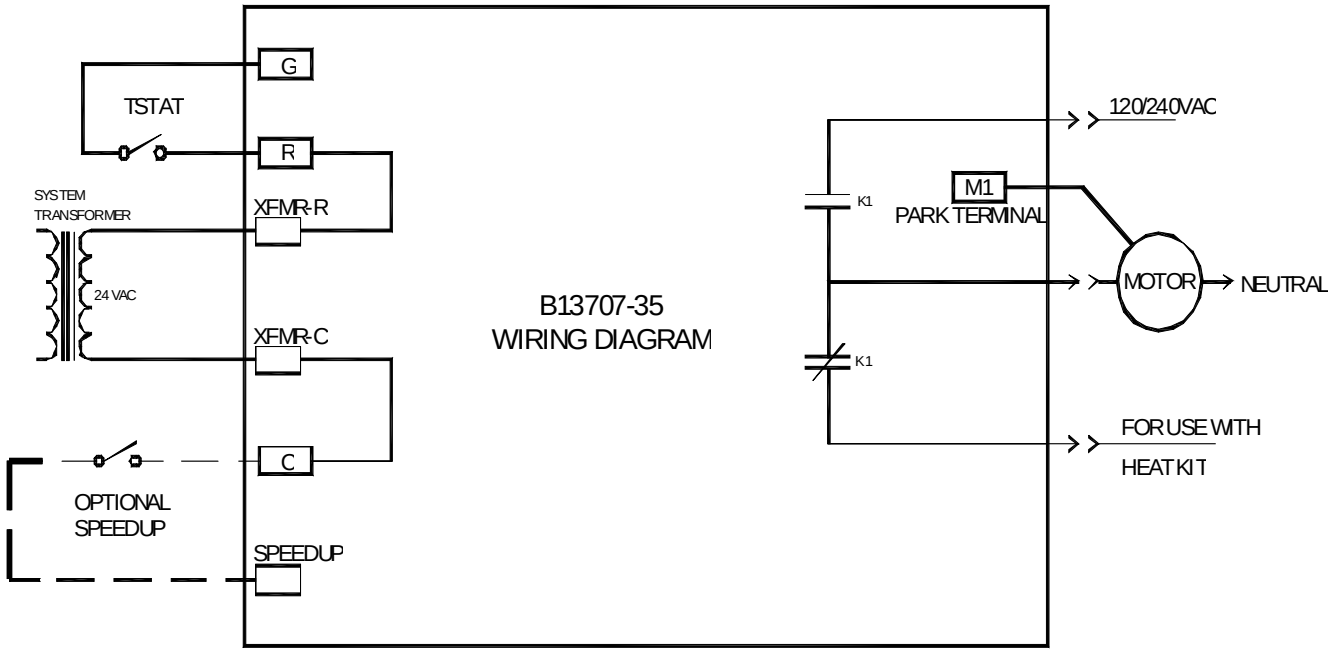

The Electronic Blower Time Delay Relay provides power to the blower motor with a delay of 7 seconds after 24VAC is applied to "G". After 24VAC is removed from "G", the blower motor output is de-energized after a delay of 65 seconds.

Normal Time Delays	60Hz	50Hz
Turn On Delay	7.0 SEC.±1%	8.4 SEC. .±1%
Turn Off Delay	65.0 SEC.±1%	78.0 SEC. .±1%

Field test mode: Shorting the "speedup" quick connect to "C" decrease times as follows:

Speedup Times	60Hz	50Hz
Turn On Delay	3.0 SEC.±1%	3.6 SEC. .±1%
Turn Off Delay	5.0 SEC.±1%	6.0 SEC. .±1%

Field test mode is cancelled when the "speedup" quick connect to "C" short is removed.

Wiring is subject to change. Always refer to the wiring diagram on the unit for the most up-to-date wiring.

WARNING **HIGH VOLTAGE! DISCONNECT ALL POWER BEFORE SERVICING. MULTIPLE POWER SOURCES MAY BE PRESENT. FAILURE TO DO SO MAY CAUSE PROPERTY DAMAGE, PERSONAL INJURY OR DEATH.**

ARUF**14**/ARPT**14**

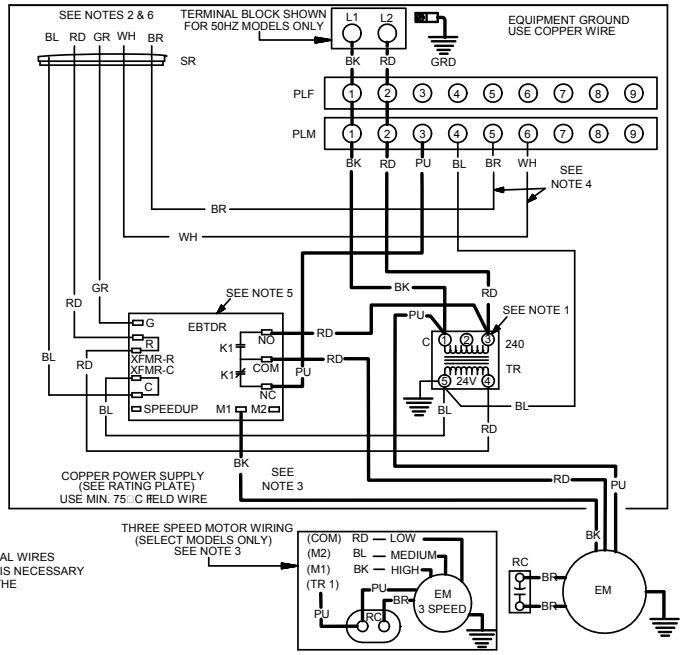

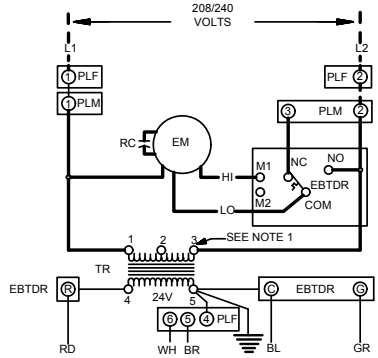

COLOR CODE

BK	BLACK	GR	GREEN
RD	RED	PU	PURPLE
YL	YELLOW	BR	BROWN
BL	BLUE	WH	WHITE

COMPONENT CODE

EM	EVAPORATOR MOTOR
RC	RUN CAPACITOR
SR	STRAIN RELIEF
R	RELAY
EBTDR	ELECTRONIC BLOWER TIME DELAY RELAY

WIRING CODE

FACTORY WIRING
HIGH VOLTAGE
LOW VOLTAGE

FIELD WIRING
HIGH VOLTAGE
LOW VOLTAGE

TR	TRANSFORMER
PLF	FEMALE PLUG CONNECTOR
PLM	MALE PLUG CONNECTOR
FL	FUSE LINK
TL	THERMAL LIMIT

IF REPLACEMENT OF THE ORIGINAL WIRES SUPPLIED WITH THIS ASSEMBLY IS NECESSARY USE WIRE THAT CONFORMS TO THE NATIONAL ELECTRIC CODE.

NOTES:

1) RED WIRES TO BE ON TRANSFORMER TERMINAL "3" FOR 240 VOLTS AND ON TERMINAL "2" FOR 208 VOLTS.
2) SEE COMPOSITE WIRING DIAGRAMS IN INSTALLATION INSTRUCTIONS FOR PROPER LOW VOLTAGE WIRING CONNECTIONS.
3) CONFIRM SPEED TAP SELECTED IS APPROPRIATE FOR APPLICATION. IF SPEED TAP NEEDS TO BE CHANGED, CONNECT APPROPRIATE MOTOR WIRE (RED FOR LOW, BLUE FOR MEDIUM, AND BLACK FOR HIGH SPEED) ON "COM" CONNECTION OF THE EBTDR. INACTIVE MOTOR WIRES MUST BE CONNECTED TO "M1 OR M2" ON EBTDR.
4) BROWN AND WHITE WIRES ARE USED WITH HEAT KITS ONLY.
5) EBTDR HAS A 7 SECOND ON DELAY WHEN "G" IS ENERGIZED AND A 65 SECOND OFF DELAY WHEN "G" IS DE-ENERGIZED.
6) LOW VOLTAGE FIELD WIRING TO BE N.E.C CLASS 2 WIRES.

0140A00242-A

Wiring is subject to change. Always refer to the wiring diagram on the unit for the most up-to-date wiring.

WARNING **HIGH VOLTAGE! DISCONNECT ALL POWER BEFORE SERVICING. MULTIPLE POWER SOURCES MAY BE PRESENT. FAILURE TO DO SO MAY CAUSE PROPERTY DAMAGE, PERSONAL INJURY OR DEATH.**

ASPT**14**/ASUF**14**

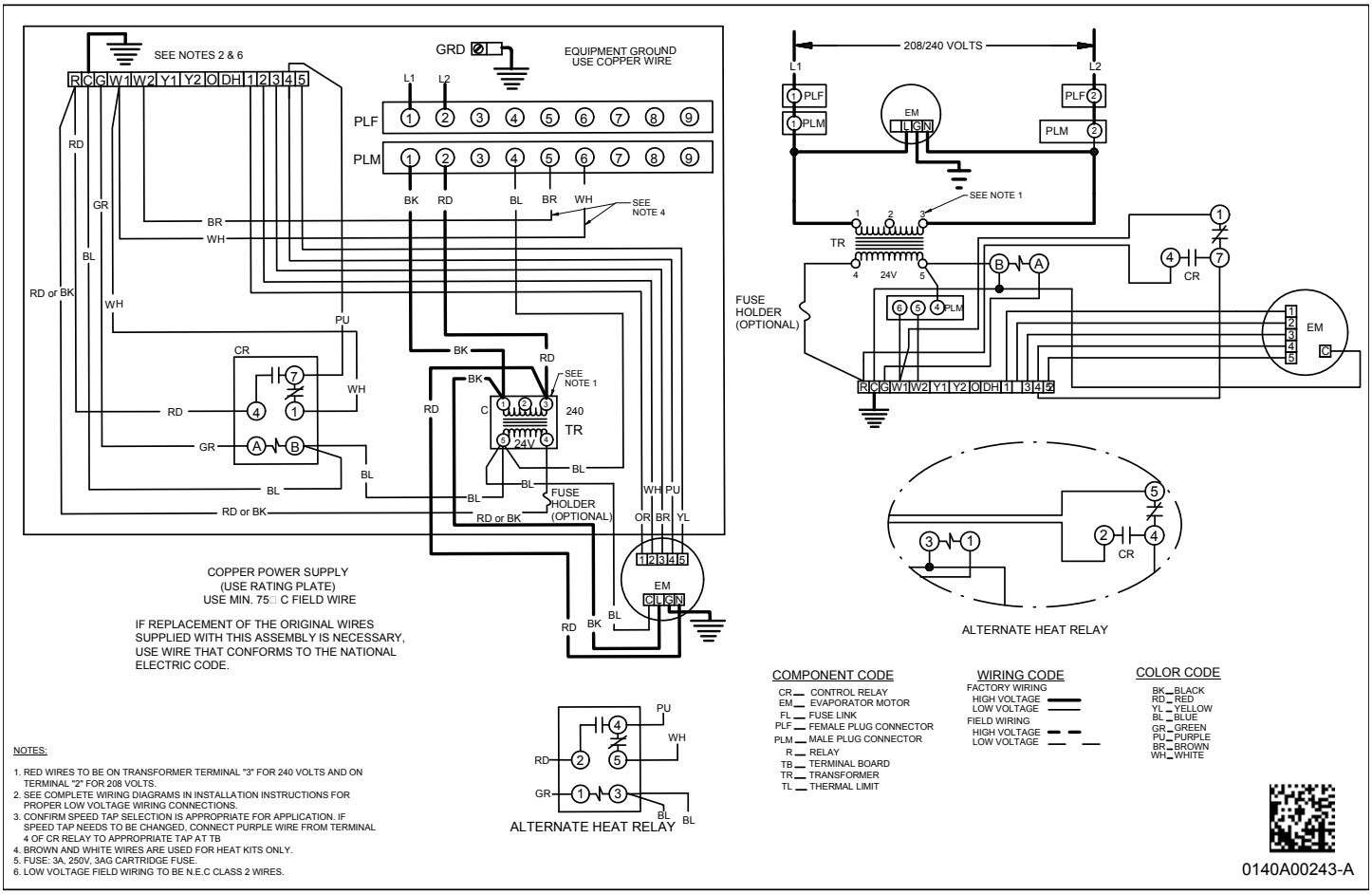

WARNING **HIGH VOLTAGE! DISCONNECT ALL POWER BEFORE SERVICING. MULTIPLE POWER SOURCES MAY BE PRESENT. FAILURE TO DO SO MAY CAUSE PROPERTY DAMAGE, PERSONAL INJURY OR DEATH.**

3-Phase Heat Kit

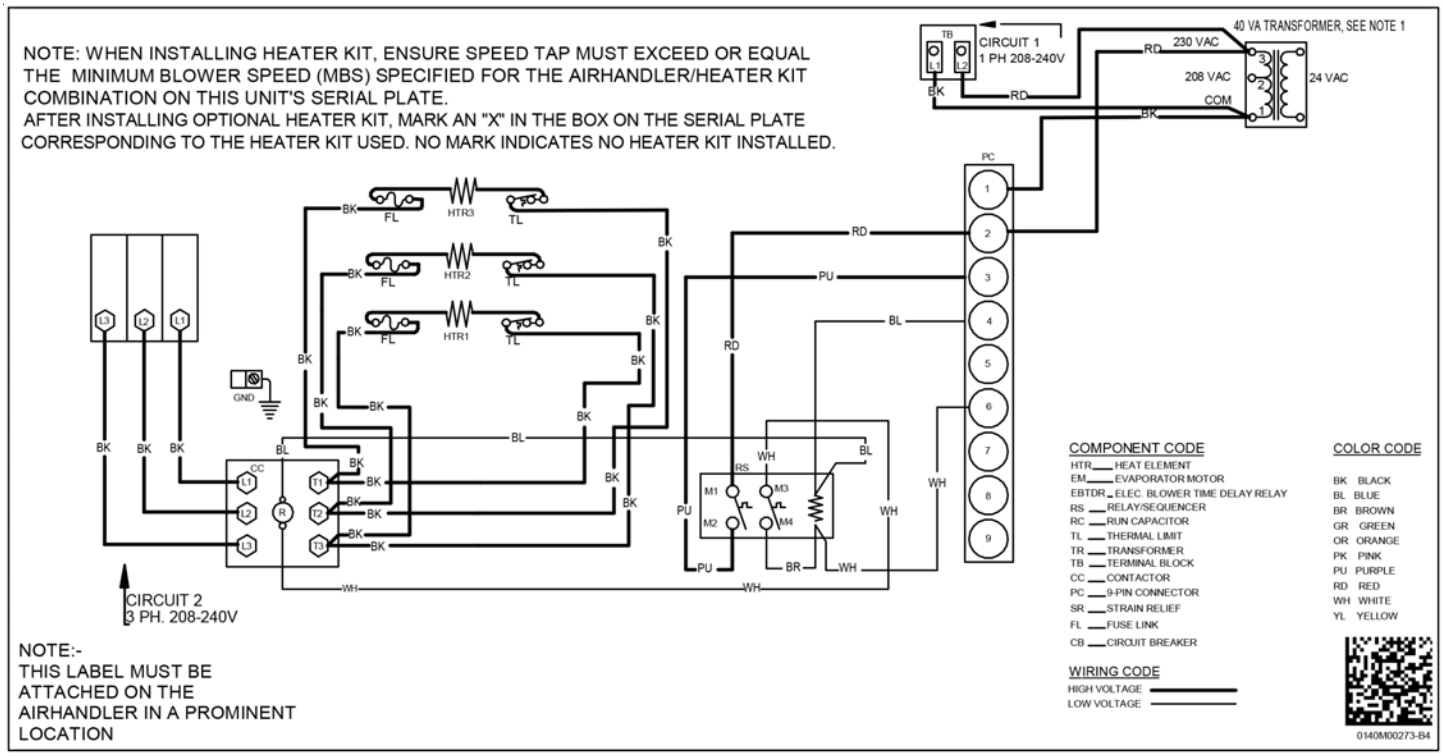

Wiring is subject to change. Always refer to the wiring diagram on the unit for the most up-to-date wiring.

SPLIT SYSTEMS

AIR CONDITIONING AND HEAT PUMP HOMEOWNER'S ROUTINE MAINTENANCE RECOMMENDATIONS

*We strongly recommend a bi-annual maintenance checkup be performed before the heating and cooling seasons begin by a **qualified servicer**.*

REPLACE OR CLEAN FILTER

IMPORTANT NOTE: Never operate unit without a filter installed as dust and lint will build up on internal parts resulting in loss of efficiency, equipment damage and possible fire.

An indoor air filter must be used with your comfort system. A properly maintained filter will keep the indoor coil of your comfort system clean. A dirty coil could cause poor operation and/or severe equipment damage.

Your air filter or filters could be located in your furnace, in a blower unit, or in "filter grilles" in your ceiling or walls. The installer of your air conditioner or heat pump can tell you where your filter(s) are, and how to clean or replace them.

Check your filter(s) at least once a month. When they are dirty, replace or clean as required. Disposable type filters should be replaced. Reusable type filters may be cleaned.

You may want to ask your dealer about high efficiency filters. High efficiency filters are available in both electronic and non-electronic types. These filters can do a better job of catching small airborne particles.

COMPRESSOR

The compressor motor is hermetically sealed and does not require additional oiling.

MOTORS

Indoor and outdoor fan motors are permanently lubricated and do not require additional oiling.

WARNING

HIGH VOLTAGE!

DISCONNECT ALL POWER BEFORE SERVICING.
MULTIPLE POWER SOURCES MAY BE PRESENT.
FAILURE TO DO SO MAY CAUSE PROPERTY DAMAGE, PERSONAL INJURY OR DEATH.

ALUMINUM INDOOR COIL CLEANING (QUALIFIED SERVICER ONLY)

This unit is equipped with an aluminum tube evaporator coil. The safest way to clean the evaporator coil is to simply flush the coil with water. This cleaning practice remains as the recommended cleaning method for both copper tube and aluminum tube residential cooling coils.

An alternate cleaning method is to use one of the products listed in the technical publication **TP-109 (shipped in the literature bag with the unit)** to clean the coils. The cleaners listed are the only agents deemed safe and approved for use to clean round tube aluminum coils. TP-109 is available on the web site in Partner Link > Service Toolkit.

NOTE: *Ensure coils are rinsed well after use of any chemical cleaners.*

CLEAN OUTSIDE COIL (QUALIFIED SERVICER ONLY)

Air must be able to flow through the outdoor unit of your comfort system. Do not construct a fence near the unit or build a deck or patio over the unit without first discussing your plans with your dealer or other qualified servicer. Restricted airflow could lead to poor operation and/or severe equipment damage.

Likewise, it is important to keep the outdoor coil clean. Dirt, leaves, or debris could also restrict the airflow. If cleaning of the outdoor coil becomes necessary, hire a qualified servicer. Inexperienced people could easily puncture the tubing in the coil. Even a small hole in the tubing could eventually cause a large loss of refrigerant. Loss of refrigerant can cause poor operation and/or severe equipment damage.

Do not use a condensing unit cover to "protect" the outdoor unit during the winter, unless you first discuss it with your dealer. Any cover used must include "breathable" fabric to avoid moisture buildup.

CAUTION

TO AVOID THE RISK OF EQUIPMENT DAMAGE OR FIRE, INSTALL THE SAME AMPERAGE BREAKER OR FUSE AS YOU ARE REPLACING. IF THE CIRCUIT BREAKER OR FUSE SHOULD OPEN AGAIN WITHIN THIRTY DAYS, CONTACT A QUALIFIED SERVICER TO CORRECT THE PROBLEM.
IF YOU REPEATEDLY RESET THE BREAKER OR REPLACE THE FUSE WITHOUT HAVING THE PROBLEM CORRECTED, YOU RUN THE RISK OF SEVERE EQUIPMENT DAMAGE.

BEFORE CALLING YOUR SERVICER

- Check the thermostat to confirm that it is properly set.
- Wait 15 minutes. Some devices in the outdoor unit or in programmable thermostats will prevent compressor operation for awhile, and then reset automatically. Also, some power companies will install devices which shut off air conditioners for several minutes on hot days. If you wait several minutes, the unit may begin operation on its own.
- Check the electrical panel for tripped circuit breakers or failed fuses. Reset the circuit breakers or replace fuses as necessary.
- Check the disconnect switch near the indoor furnace or blower to confirm that it is closed.
- Check for obstructions on the outdoor unit . Confirm that it has not been covered on the sides or the top. Remove any obstruction that can be safely removed. If the unit is covered with dirt or debris, call a qualified servicer to clean it.
- Check for blockage of the indoor air inlets and outlets. Confirm that they are open and have not been blocked by objects (rugs, curtains or furniture).
- Check the filter. If it is dirty, clean or replace it.
- Listen for any unusual noise(s), other than normal operating noise, that might be coming from the outdoor unit. If you hear unusual noise(s) coming from the unit, call a qualified servicer.

NOTE: SPECIFICATIONS AND PERFORMANCE DATA LISTED HEREIN ARE SUBJECT TO CHANGE WITHOUT NOTICE

Visit our website at www.daikincomfort.com, www.goodmanmfg.com or www.amana-hac.com for information on:

- Products
- Warranties
- Customer Services
- Parts
- Contractor Program and Training
- Financing Options

5151 San Felipe, Suite 500, Houston, TX 77056

© 2012 - 2015 Goodman Manufacturing Company, L.P.

Amana® is a registered trademark of Maytag Corporation or its related companies and is used under license. All rights reserved.