Installation Instructions

A/GPD 14 SEER “M” SERIES - Single Package

Dual Fuel Gas-Electric Heating & Cooling Units

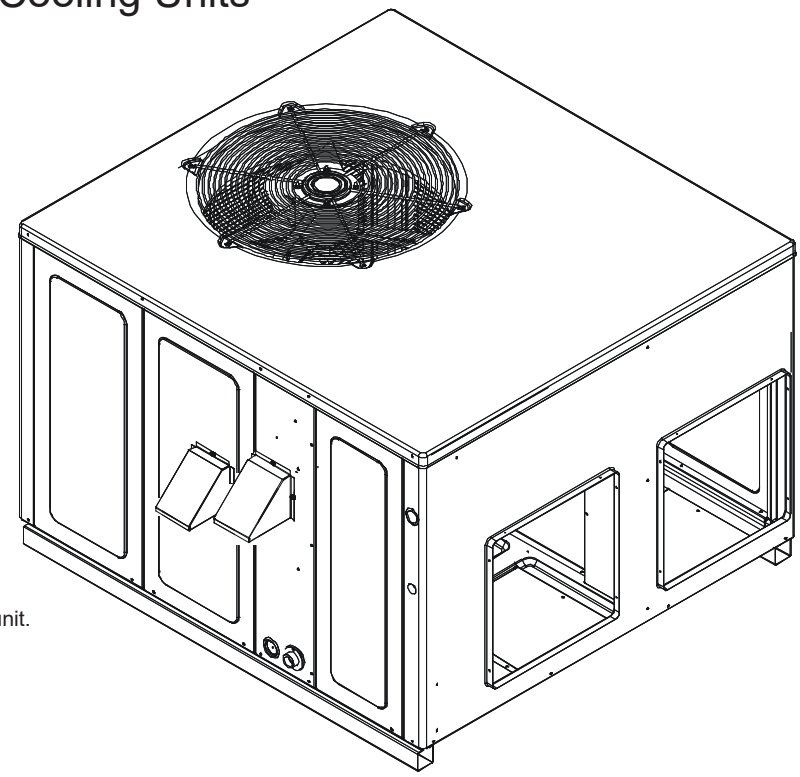

Affix this manual and Users Information Manual adjacent to the unit.

ATTENTION INSTALLING PERSONNEL

Prior to installation, thoroughly familiarize yourself with this Installation Manual. Observe all safety warnings. During installation or repair, caution is to be observed.

It is your responsibility to install the product safely and to educate the customer on its safe use.

RECOGNIZE THIS SYMBOL AS A SAFETY PRECAUTION.

These installation instructions cover the outdoor installation of single package gas electric heating and cooling units. See the Specification Sheet applicable to your model* for information regarding accessories.

*NOTE: Please contact your distributor or our website for the applicable Specifications Sheets referred to in this manual.

This Forced Air Central Unit Design Complies With Requirements Embodied in The American National Standard / National Standard of Canada Shown Below.

ANSI Z21.47•CSA-2.3 Central Furnaces

*NOTE: Please contact your distributor or our website for the applicable Specification Sheet referred to in this manual.

WARNING

Only personnel that have been trained to install, adjust, service or repair(hereinafter, “service”) the equipment specified in this manual should service the equipment. The manufacturer will not be responsible for any injury or property damage arising from improper service or service procedures. If you service this unit, you assume responsibility for any injury or property damage which may result. In addition, in jurisdictions that require one or more licenses to service the equipment specified in this manual, only licensed personnel should service the equipment. Improper installation, adjustment, servicing or repair of the equipment specified in this manual, or attempting to install, adjust, service or repair the equipment specified in this manual without proper training may result in product damage, property damage, personal injury or death.

Goodman Manufacturing Company, L.P.
19001 Kermier Rd., Waller, TX 77484
www.goodmanmfg.com or www.amana-hac.com
© 2011-2018, 2021 Goodman Manufacturing Company, L.P.

IO-407M
07/2021

Amana is a registered trademark of Maytag Corporation or its related companies and is used under license. All rights reserved.

INDEX

TO THE INSTALLER 2
TO THE OWNER..... 2
SHIPPING INSPECTION 2
SAFETY INSTRUCTIONS..... 2
ORDERING PARTS 5
CODES AND REGULATIONS..... 5
EPA REGULATIONS 5
NATIONAL CODES 5
PRE-INSTALLATION CHECKS..... 6
UNIT INSTALLATION 6
All Installations 6
Ground Level Installations Only 6
Rooftop Installations Only 7
Roof Curb Installations Only 7
General Information..... 7
Rigging Details 8
Gas Piping 8
High Altitude Derate (U.S. Installations Only) 8
Piping 8
Wiring..... 11
High Voltage Wiring 11
Thermostat Controls 11
Low Voltage Wiring 11
Internal Wiring..... 11
Circulating Air and Filters 12
Airflow Conversion 12
Horizontal Air Flow 12
Ductwork 12
Filters 13
Venting..... 13
Installation - Flue Hood Exhaust 13
Installation - Combustion Air Intake Hood..... 13
Condensate Drain..... 14
Condensate Drain Connection..... 14
Normal Sequences Of Operation 14
HEAT PUMP OPERATION 14
Outdoor Thermostat 14
Optional Outdoor Thermostat (OTDFPKG-01)..... 14
Heating Cycle (Heat Pump) 14
Heating Cycle (Natural Gas/ LP)..... 14
Defrost Cycle 15
Cooling..... 15
Fan Only 15
Air flow Measurement and Adjustment 15
Air Flow Adjustments For Indoor Blower Motor..... 15
Start-up, Adjustments, and Checks 16
Temperature Rise..... 16
External Static Pressure 17
Superheat 18
Subcooling 18
Heating Start-up (Natural Gas / LP)..... 16
Cooling Start-up 19
MAINTENANCE 19
Filter Replacement or Cleaning 19
Cabinet Finish Maintenance 19
Clean Outside Coil (Qualified Servicer Only)..... 19
Condenser, Evaporator, and Induced Draft Motors .. 19
Flame Sensor (Qualified Servicer Only) 19
Main Burner Flame (Qualified Servicer Only) 20
APPENDIX 21
TROUBLESHOOTING 22
Ignition Control Diagnostic Indicator Chart 23
Heating Timing Chart 23
Cooling/heat pump Timing Chart 23
Unit Dimensions..... 24
WIRING DIAGRAM 25
Minimum Clearances 27
Recommended Filter Sizes..... 27
Blower Performance Data..... 29
START-UP CHECKLIST..... 30

TO THE INSTALLER

Before installing this unit, please read this manual to familiarize yourself on the specific items which must be adhered to, including maximum external static pressure to unit, air temperature rise, minimum or maximum CFM and motor speed connections.

IMPORTANT NOTE: If a crankcase heater is used, the unit should be energized 24 hours prior to compressor start up to ensure crankcase heater has sufficiently warmed the compressor. Compressor damage may occur if this step is not followed.

TO THE OWNER

A warranty certificate is provided with the unit. Read the warranty carefully and note what is covered. Keep the warranty certificate in a safe place so you can find it when necessary.

SHIPPING INSPECTION

Upon receiving the unit, inspect it for damage from shipment. Claims for damage, either shipping or concealed, should be filed immediately with the shipping company. Check the unit model number, specifications, electrical characteristics and accessories to determine if they are correct. In the event an incorrect unit is shipped, it must be returned to the supplier and must NOT be installed. The manufacturer assumes no responsibility for installation of incorrectly shipped units.

SAFETY INSTRUCTIONS

The following symbols and labels are used throughout this manual to indicate immediate or potential safety hazards. It is the owner's and installer's responsibility to read and comply with all safety information and instructions accompanying these symbols. Failure to heed safety information increases the risk of personal injury, property damage, and/or product damage.

WARNING

If the information in these instructions is not followed exactly, a fire or explosion may result causing property damage, personal injury or loss of life.

– Do not store or use gasoline or other flammable vapors and liquids in the vicinity of this or any other appliance.

– **WHAT TO DO IF YOU SMELL GAS:**

- Do not try to light any appliance.
- Do not touch any electrical switch; do not use any phone in your building.
- Immediately call your gas supplier from a neighbor's phone. Follow the gas supplier's instructions.
- If you cannot reach your gas supplier, call the fire department.

– Installation and service must be performed by a qualified installer, service agency or the gas supplier.

WARNING

Heating unit should not be utilized without reasonable, routine, inspection, maintenance and supervision. If the building in which any such device is located will be vacant, care should be taken that such device is routinely inspected, maintained and monitored. In the event that the building maybe exposed to freezing temperatures and will be vacant, all water-bearing pipes should be drained, the building should be properly winterized, and the water source closed. In the event that the building may be exposed to freezing temperatures and will be vacant, any hydronic coil units should be drained as well and, in such case, alternative heat sources should be utilized.

WARNING

FIRE OR EXPLOSION HAZARD

Failure to follow the safety warnings exactly could result in serious injury, death or property damage. Never test for gas leaks with an open flame. Use a commercially available soap solution made specifically for the detection of leaks to check all connections. A fire or explosion may result causing property damage, personal injury or loss of life.

AVERTISSEMENT

RISQUE D'INCENDIE OU D'EXPLOSION

Si les consignes de sécurité ne sont pas suivies à la lettre, cela peut entraîner la mort, de graves blessures ou des dommages matériels. Ne jamais vérifier la présence de fuites de gaz au moyen d'une flamme nue. Vérifier tous les raccords en utilisant une solution savonneuse commerciale conçue spécialement pour la détection de fuites. Un incendie ou une explosion risque de se produire, ce qui peut entraîner la mort, des blessures ou des dommages matériels.

WARNING

Should overheating occur or the gas supply fail to shut off, turn off the manual gas shutoff valve external to the unit before turning off the electrical supply.

WARNING

Do not connect to or use any device that is not design certified by Goodman for use with this unit. Serious property damage, personal injury, reduced unit performance and/or hazardous conditions may result from the use of such non-approved devices.

WARNING

This product contains or produces a chemical or chemicals which may cause serious illness or death and which are known to the State of California to cause cancer, birth defects or other reproductive harm.

WARNING

To avoid property damage, personal injury or death, do not use this unit if any part has been under water. Immediately call a qualified service technician to inspect the unit and to replace any part of the control system and any gas control having been under water.

WARNING

This unit must not be used as a "construction heater" during the finishing phases of construction on a new structure. This type of use may result in premature failure of the unit due to extremely low return air temperatures and exposure to corrosive or very dirty atmospheres.

WARNING

HIGH VOLTAGE!

Disconnect ALL power before servicing or installing this unit. Multiple power sources may be present. Failure to do so may cause property damage, personal injury or death.

WARNING

To prevent the risk of property damage, personal injury, or death, do not store combustible materials or use gasoline or other flammable liquids or vapors in the vicinity of this appliance.

⚠ WARNING

CARBON MONOXIDE POISONING HAZARD
Failure to follow the steps outlined below for each appliance connected to the venting system being placed into operation could result in carbon monoxide poisoning or death.
The following steps shall be followed for each appliance connected to the venting system being placed into operation, while all other appliances connected to the venting system are not in operation:
1) Seal any unused openings in the venting system.
2) Inspect the venting system for proper size and horizontal pitch, as required in the National Fuel Gas Code, ANSI Z223.1/NFPA 54 or the Natural Gas and Propane Installation Code, CSA B149.1 and these instructions. Determine that there is no blockage or restriction, leakage, corrosion and other deficiencies which could cause an unsafe condition.
3) As far as practical, close all building doors and windows and all doors between the space in which the appliance(s) connected to the venting system are located and other spaces of the building.
4) Close fireplace dampers.
5) Turn on clothes dryers and any appliance not connected to the venting system. Turn on any exhaust fans, such as range hoods and bathroom exhausts, so they are operating at maximum speed. Do not operate a summer exhaust fan.
6) Follow the lighting instructions. Place the appliance being inspected into operation. Adjust the thermostat so appliance is operating continuously.
7) Test for spillage from draft hood equipped appliances at the draft hood relief opening after 5 minutes of main burner operation. Use the flame of a match or candle.
8) If improper venting is observed during any of the above tests, the venting system must be corrected in accordance with the National Fuel Gas Code, ANSI Z223.1/NFPA 54 and/or Natural Gas and Propane Installation Code, CSA B149.1.
9) After it has been determined that each appliance connected to the venting system properly vents when tested as outlined above, return doors, windows, exhaust fans, fireplace dampers and any other gas-fired burning appliance to their previous conditions of use.

⚠ AVERTISSEMENT

RISQUE D'INTOXICATION AU MONOXYDE DE CARBONE Si les étapes décrites ci-dessous ne sont pas suivies pour chacun des appareils raccordés au système de ventilation au moment de sa mise en marche, cela peut entraîner une intoxication au monoxyde de carbone ou la mort. Les étapes suivantes doivent être suivies pour chacun des appareils raccordés au système de ventilation au moment de sa mise en marche, alors que tous les autres appareils raccordés au système de ventilation ne sont pas en marche :
1) Sceller toutes les ouvertures inutilisées du système de ventilation.
2) Inspecter le système de ventilation afin de vérifier si la taille et l'inclinaison par rapport à l'horizontale sont conformes aux exigences du National Fuel Gas Code, ANSI Z223.1/NFPA 54 ou du Code d'installation du gaz naturel et du propane, CSA B149.1 et à ces instructions. Vérifier qu'il n'y a pas d'obstruction ou de restriction, de fuite, de corrosion et d'autres problèmes qui pourraient entraîner une situation dangereuse.
3) Si possible, fermer toutes les portes et fenêtres du bâtiment ainsi que toutes les portes séparant l'endroit où se trouvent les appareils raccordés au système de ventilation et les autres zones du bâtiment.
4) Fermer le registre des foyers.
5) Mettre les sécheuses en marche ainsi que tous les autres appareils qui ne sont pas raccordés au système de ventilation. Mettre en marche tous les ventilateurs de tirage, comme celui des hottes de cuisine et des salles de bains, et les régler à la puissance maximale. Ne pas mettre en marche les ventilateurs d'été.
6) Suivre les instructions d'allumage. Mettre en marche l'appareil soumis à l'inspection. Régler le thermostat de manière à ce que l'appareil fonctionne en continu.
7) Vérifier la présence de fuite au niveau de l'ouverture du coupe-tirage des appareils qui en sont dotés après 5 minutes de fonctionnement du brûleur principal. Utiliser la flamme d'une allumette ou d'une bougie.
8) Si un problème de ventilation est observé pendant l'un des essais décrits ci-dessus, des correctifs doivent être apportés au système de ventilation conformément au National Fuel Gas Code, ANSI Z223.1/NFPA 54 et (ou) au Code d'installation du gaz naturel et du propane, CSA B149.1.
9) Une fois qu'il a été déterminé que chaque appareil raccordé au système de ventilation fonctionne correctement au moyen des essais décrits ci-dessus, les portes, les fenêtres, les ventilateurs, les registres de foyer et tous les autres appareils de combustion alimentés au gaz doivent être remis dans leur état initial.

DANGER

CARBON MONOXIDE POISONING HAZARD

Special Warning for Installation of Furnace or Air Handling Units in Enclosed Areas such as Garages, Utility Rooms or Parking Areas

Carbon monoxide producing devices (such as an automobile, space heater, gas water heater, etc.) should not be operated in enclosed areas such as unventilated garages, utility rooms or parking areas because of the danger of carbon monoxide (CO) poisoning resulting from the exhaust emissions. If a furnace or air handler is installed in an enclosed area such as a garage, utility room or parking area and a carbon monoxide producing device is operated therein, there must be adequate, direct outside ventilation.

This ventilation is necessary to avoid the danger of CO poisoning which can occur if a carbon monoxide producing device continues to operate in the enclosed area. Carbon monoxide emissions can be (re)circulated throughout the structure if the furnace or air handler is operating in any mode.

CO can cause serious illness including permanent brain damage or death. B10259-216

DANGER
PELIGRO

RIESGO DE INTOXICACIÓN POR MONÓXIDO DE CARBONO

Advertencia especial para la instalación de calentadores ó manejadoras de aire en áreas cerradas como estacionamientos ó cuartos de servicio.

Los equipos ó aparatos que producen monóxido de carbono (tal como automóvil, calentador de gas, calentador de agua por medio de gas, etc) no deben ser operados en áreas cerradas debido al riesgo de envenenamiento por monóxido de carbono (CO) que resulta de las emisiones de gases de combustión. Si el equipo ó aparato se opera en dichas áreas, debe existir una adecuada ventilación directa al exterior.

Esta ventilación es necesaria para evitar el peligro de envenenamiento por CO, que puede ocurrir si un dispositivo que produce monóxido de carbono sigue operando en el lugar cerrado.

Las emisiones de monóxido de carbono pueden circular a través del aparato cuando se opera en cualquier modo.

El monóxido de carbono puede causar enfermedades severas como daño cerebral permanente ó muerte. B10259-216

DANGER

RISQUE D'EMPOISONNEMENT AU MONOXYDE DE CARBONE

Advertencia especial para la instalación de calentadores ó manejadoras de aire en áreas cerradas como estacionamientos ó cuartos de servicio.

Avertissement special au sujet de l'installation d'appareils de hauffage ou de traitement d'air dans des endroits clos, tets les garages, les locaux d'entretien et les stationnements. Evitez de mettre en marche les appareils produisant du monoxyde de carbone (tels que les automobile, les appareils de chauffage autonome,etc.) dans des endroits non ventilés tels que les d'empoisonnement au monoxyde de carbone. Si vous devez faire fonctionner ces appareils dans un endroit clos, assures-vous qu'il y ait une ventilation directe provenant de l'exterier.

Cette ventilation est nécessaire pour éviter le danger d'intoxication au CO pouvant survenir si un appareil produisant du monoxyde de carbone continue de fonctionner au sein de la zone confinée.

Les émissions de monoxyde de carbone peuvent etre recircules dans les endroits clos, si l'appareil de chauffage ou de traitement d'air sont en marche.

Le monoxyde de carbone peut causer des maladies graves telles que des dommages permanents au cerveau et meme la mort. B10259-216

ORDERING PARTS

When reporting shortages or damages, or ordering repair parts, give the complete model and serial numbers as stamped on the units nameplate. Replacement parts for this appliance are available through your contractor or local distributor. For the location of your nearest distributor, consult the white business pages, the yellow page section of the local telephone book or contact:

HOMEOWNER SUPPORT
Goodman Manufacturing Company, L.P.
19001 KERMIER ROAD
Houston, Texas 77484
877-254-4729

GENERAL INFORMATION

WARNING

TO PREVENT PROPERTY DAMAGE, PERSONAL INJURY OR DEATH, DUE TO FIRE, EXPLOSIONS, SMOKE, SOOT, CONDENSATION, ELECTRIC SHOCK OR CARBON MONOXIDE, THIS UNIT MUST BE PROPERLY INSTALLED, REPAIRED, OPERATED, AND MAINTAINED.

This unit is approved for outdoor installation ONLY. To assure that your unit operates safely and efficiently, it must be installed, operated, and maintained in accordance with these installation and operating instructions, all local building codes and ordinances, or in their absence, with the latest edition of the National Fuel Gas Code NFPA 54/ANSI Z223.1 and National Standard of Canada CAN/CSA B149 Installation Codes.

The heating and cooling capacities of the unit should be greater than or equal to the design heating and cooling loads of the area to be conditioned. The loads should be calculated by an approved method or in accordance with A.S.H.R.A.E. Guide or Manual J - Load Calculations published by the Air Conditioning Contractors of America.

Obtain from:

American National Standards Institute
25 West 43rd street, 4th Floor
New York, NY 10036

PRE-INSTALLATION CHECKS

Before attempting any installation, the following points should be considered:

- Structural strength of supporting members
- Clearances and provision for servicing
- Power supply and wiring
- Air duct connections
- Drain facilities and connections
- Gas piping and connections
- Location may be on any four sides of a home, manufactured or modular, to minimize noise

UNIT INSTALLATION

WARNING

TO PREVENT POSSIBLE EQUIPMENT DAMAGE, PROPERTY DAMAGE, PERSONAL INJURY OR DEATH, THE FOLLOWING BULLET POINTS MUST BE OBSERVED WHEN INSTALLING THE UNIT

All Installations:

- For proper flame pattern within the heat exchanger and proper condensate drainage, the unit must be mounted level.
- The flue outlet hood must be at least 12 inches from any opening through which flue gases could enter a building, and at least three feet above any forced air inlet located within ten feet. The economizer/ manual fresh air intake/motorized fresh air intake and combustion air inlet mounted on the unit are not affected by this restriction.
- To avoid possible corrosion of the heat exchanger, do not locate the unit in an area where the outdoor air (i.e. combustion air for the unit) will be frequently contaminated by compounds containing chlorine or fluorine. Common sources of such compounds include swimming pool chemicals and chlorine bleaches, paint stripper, adhesives, paints, varnishes, sealers, waxes (which are not yet dried) and solvents used during construction and remodeling. Various commercial and industrial processes may also be sources of chlorine/fluorine compounds.
- To avoid possible illness or death of the building occupants, do NOT locate outside air intake device (economizer, manual fresh air intake, motorized fresh air intake) too close to an exhaust outlet, gas vent termination, or plumbing vent outlet. For specific distances required, consult local codes.
- Allow minimum clearances from the enclosure for fire protection, proper operation, and service access (see appendix). These clearances must be permanently maintained.
- The combustion air inlet and flue outlet hoods on the unit must never be obstructed. If used, do not allow the economizer/manual fresh air damper/ motorized fresh air damper to become blocked by snow or debris. In some climates or locations, it may be necessary to elevate the unit to avoid these problems.
- Damper must be in open position when appliance main burner(s) is operating.

  Le registre doit être ouvert lorsque tout brûleur principal de l'appareil est en état de fonctionnement.
- When the unit is heating, the temperature of the return air entering the unit must be between 50° F and 100° F.
- Units manufactured on or after May 1, 2017 are not permitted to be used in Canada for heating of buildings or structures under construction.

Ground Level Installations Only:

- When the unit is installed on the ground adjacent to the building, a level concrete (or equal) base is recommended. Prepare a base that is 3" larger than the package unit footprint and a minimum of 4" thick.
- The base should also be located where no runoff of water from higher ground can collect in the unit.
- The top of the unit should be completely unobstructed. If units are to be located under an overhang, there should be a minimum of 48" clearance and provisons made to deflect the warm discharge air out from the overhang.

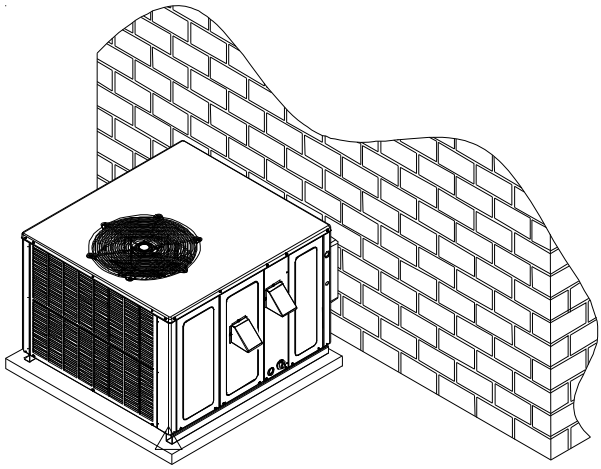

Outside Slab Installation

Rooftop Installations Only:

NOTE: To ensure proper condensate drainage, unit must be installed in a level position.

- To avoid possible property damage or personal injury, the roof must have sufficient structural strength to carry the weight of the unit(s) and snow or water loads as required by local codes. Consult a structural engineer to determine the weight capabilities of the roof.
- The unit may be installed directly on wood floors or on Class A, Class B, or Class C roof covering material.
- To avoid possible personal injury, a safe, flat surface for service personnel should be provided.

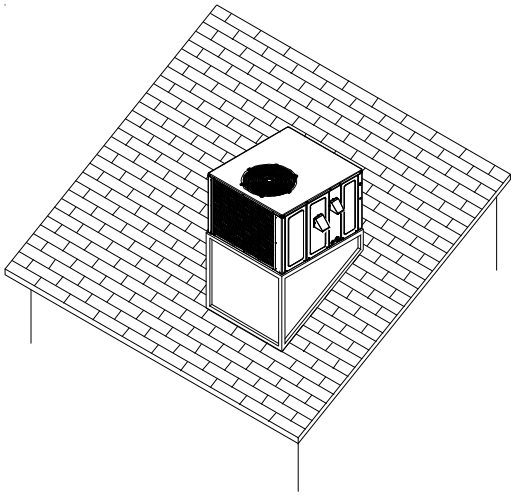

Rooftop Installation

Roof Curb Installations Only:

- Sufficient structural support must be determined prior to locating and mounting the curb and package unit.
- Ductwork must be constructed using industry guidelines. The duct work must be placed into the roof curb before mounting the package unit.
- Curb insulation, cant strips, flashing and general roofing material are furnished by the contractor.

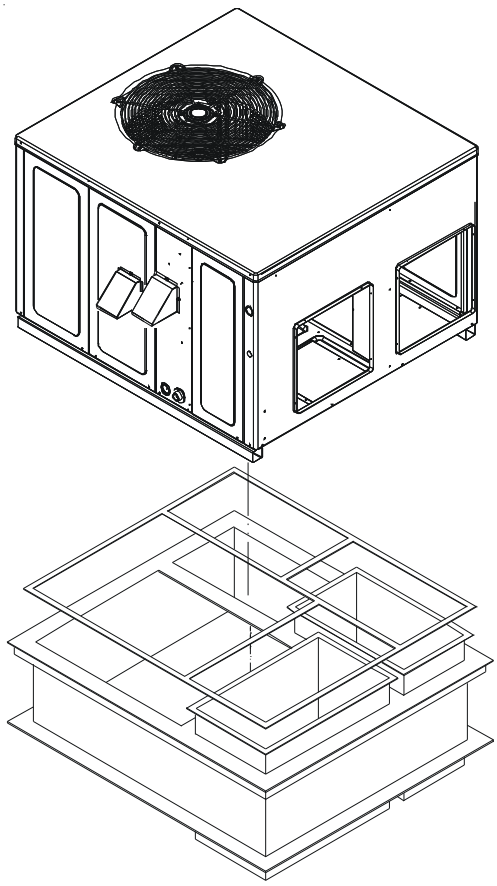

Roof Curb Installation

RIGGING DETAILS

WARNING

To prevent property damage, the unit should remain in an upright position during all rigging and moving operations. To facilitate lifting and moving when a crane is used, place the unit in an adequate cable sling.

Refer to the Unit Installation Instructions for proper unit installation. Curbing must be installed in compliance with the National Roofing Contractors Association Manual.

Lower unit carefully onto roof mounting curb. While rigging unit, center of gravity will cause condenser end to be lower than supply air end.

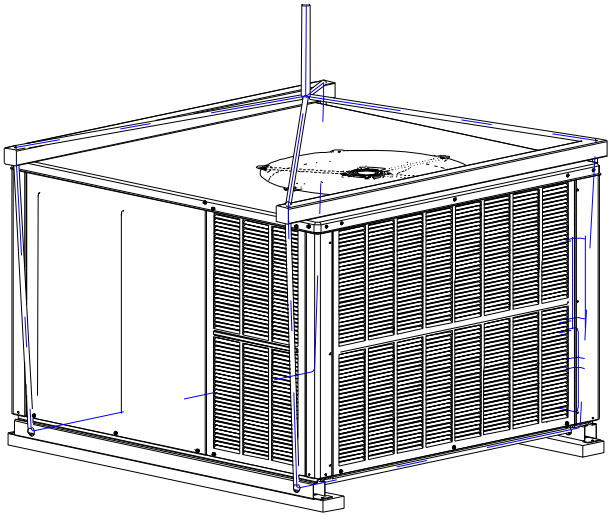

Rigging

GAS PIPING

IMPORTANT NOTE: This unit is factory set to operate on natural gas at the altitudes shown on the rating plate.

WARNING

To prevent property damage, personal injury or death when using propane gas alone or at higher altitudes, obtain and install the proper conversion kit(s). Failure to do so can result in unsatisfactory operation and/or equipment damage. High altitude kits are for the U.S. Installations only and are not approved for use in Canada.

The rating plate is stamped with the model number, type of gas and gas input rating. Make sure the unit is equipped to operate on the type of gas available. Conversion to LP gas is permitted with the use of the factory authorized conversion kit LPM-08.

INLET GAS PRESSURE	
Natural	Min. 5.0" W.C., Max. 10.0" W.C.
Propane	Min. 11.0" W.C., Max. 13.0" W.C.

Inlet Gas Pressure be within the Minimum and the Maximum Value Shown in Table Above.

The minimum supply pressure should not vary from that shown in the table above because this could prevent the unit from having dependable ignition. In addition, gas input to the burners must not exceed the rated input shown on the rating plate. Over firing of the unit could result in premature heat exchanger failure.

High Altitude Derate (U.S. Installations Only)

IMPORTANT NOTE: Installation of this gas/electric package unit at altitudes above 2000 ft (610 m) shall be made in accordance with the Listed High Altitude Conversion Kit.

L'installation de ce générateur de chaleur à des altitudes supérieures à 2000 pi (610 m) doit être effectuée conformément aux instructions accompagnant la trousse de conversion pour haute altitude fournie avec cet appareil.

The gas/electric units naturally derate with altitude. Do not attempt to increase the firing rate by changing orifices or increasing the manifold pressure. This can cause poor combustion and equipment failure. At all altitudes, the manifold pressure must be within 0.3 inches W.C. of that listed on the nameplate for the fuel used. At all altitudes and with either fuel, the air temperature rise must be within the range listed on the unit nameplate.

Refer to the Installation Manual provided with the LP kit for conversion from natural gas to propane gas and for altitude adjustments.

Use HA02 for installations above 2000'.

NOTE: Up to 2,000 feet, no changes are required; above 2,000 feet, refer to the gas/electric package unit specification sheets for required kit(s).

Piping

IMPORTANT NOTE: To avoid possible unsatisfactory operation or equipment damage due to under firing of equipment, do not undersize the natural/propane gas piping from the meter/tank to the unit. When sizing a trunk line, include all appliances on that line that could be operated simultaneously.

The rating plate is stamped with the model number, type of gas and gas input rating. Make sure the unit is equipped to operate on the type of gas available. The gas line installation must comply with local codes, or in the absence of local codes, with the latest edition of the National Fuel Gas Code NFPA 54/ANSI Z223.1.

Natural Gas Connection

Refer to the Proper Piping Practice drawing for the general layout at the unit. The following rules apply:

1. Use black iron pipe and fittings for the supply piping. The use of a flex connector and/or copper piping is permitted as long as it is in agreement with local codes.
2. Use pipe joint compound on male threads only. Pipe joint compound must be resistant to the action of the fuel used.
3. Use ground joint unions.
4. Install a drip leg to trap dirt and moisture before it can enter the gas valve. The drip leg must be a minimum of three inches long.
5. Use two pipe wrenches when making connection to the gas valve to keep it from turning.
6. Install a manual shut-off valve in a convenient location (within six feet of unit) between the meter and the unit.
7. Tighten all joints securely.
8. The unit must be connected to the building piping by one of the following methods:
   - Rigid metallic pipe and fittings
   - Semirigid metallic tubing and metallic fittings (Aluminum alloy tubing must not be used in exterior locations)
   - Listed gas appliance connectors used in accordance with the terms of their listing that are completely in the same room as the equipment

In the preceding two methods the connector or tubing must be protected from physical and thermal damage. Aluminum alloy tubing and connectors must be coated to protect against external corrosion when in contact with masonry, plaster or insulation or are subject to repeated wettings by liquids (water - not rain water, detergents or sewage).

Natural Gas Capacity of Pipe in Cubic Feet of Gas Per Hour (CFH)					
Length of Pipe in Feet	Nominal Black Pipe Size (inches)				
	1/2	3/4	1	1 1/4	1 1/2
10	132	278	520	1050	1600
20	92	190	350	730	1100
30	73	152	285	590	980
40	63	130	245	500	760
50	56	115	215	440	670
60	50	105	195	400	610
70	46	96	180	370	560
80	43	90	170	350	530
90	40	84	160	320	490
100	38	79	150	305	460

Pressure = .50 PSIG or less and Pressure Drop of 0.3" W.C. (Based on 0.60 Specific Gravity Gas)

$$\text{CFH} = \frac{\text{BTUH Furnace Input}}{\text{Heating Value of Gas (BTU/Cubic Foot)}}$$

Proper Piping Practice

NOTE: The unit gas supply entrance is factory sealed with plugs. Keep plugs in place until gas supply is ready to be installed. Once ready, replace the plugs with the supplied grommets and install gas supply line.

WARNING

TO AVOID PROPERTY DAMAGE OR PERSONAL INJURY, BE SURE THERE IS NO OPEN FLAME IN THE VICINITY DURING AIR BLEEDING.

There will be air in the gas supply line after testing for leaks on a new installation. Therefore, the air must be bled from the line by loosening the ground joint union until pure gas is expelled. Tighten union and wait for five minutes until all gas has been dissipated in the air. Be certain there is no open flame in the vicinity during air bleeding procedure. The unit is placed in operation by closing the main electrical disconnect switch for the unit.

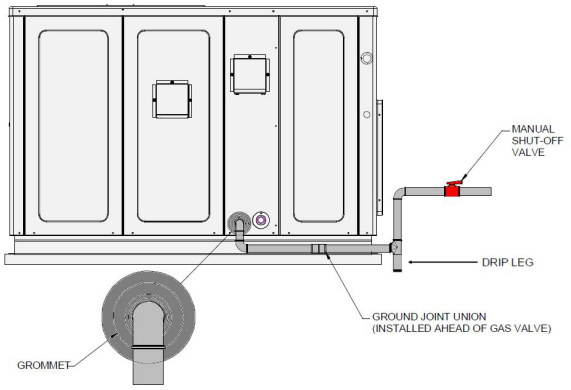

Piping

CAUTION

TO PREVENT PROPERTY DAMAGE OR PERSONAL INJURY DUE TO FIRE, THE FOLLOWING INSTRUCTIONS MUST BE PERFORMED REGARDING GAS CONNECTIONS AND PRESSURE TESTING:

- **THE UNIT AND ITS GAS CONNECTIONS MUST BE LEAK TESTED BEFORE PLACING IN OPERATION. BECAUSE OF THE DANGER OF EXPLOSION OR FIRE, NEVER USE A MATCH OR OPEN FLAME TO TEST FOR LEAKS. NEVER EXCEED SPECIFIED PRESSURES FOR TESTING. HIGHER PRESSURE MAY DAMAGE GAS VALVE AND CAUSE OVERFIRING WHICH MAY RESULT IN PREMATURE HEAT EXCHANGER FAILURE.**
- **THIS UNIT AND ITS SHUT-OFF VALVE MUST BE DISCONNECTED FROM THE GAS SUPPLY DURING ANY PRESSURE TESTING OF THAT SYSTEM AT PRESSURES IN EXCESS OF 1/2 PSIG (3.48 KPA).**
- **THIS UNIT MUST BE ISOLATED FROM THE GAS SUPPLY SYSTEM BY CLOSING ITS MANUAL SHUT-OFF VALVE DURING ANY PRESSURE TESTING OF THE GAS SUPPLY PIPING SYSTEM AT TEST PRESSURES EQUAL TO OR LESS THAN 1/2 PSIG (3.48 KPA).**

Propane Gas Installations

WARNING

TO AVOID PROPERTY DAMAGE, PERSONAL INJURY OR DEATH DUE TO FIRE OR EXPLOSION CAUSED BY A PROPANE GAS LEAK, INSTALL A GAS DETECTING WARNING DEVICE. SINCE RUST CAN REDUCE THE LEVEL OF ODORANT IN PROPANE GAS, A GAS DETECTING WARNING DEVICE IS THE ONLY RELIABLE WAY TO DETECT A PROPANE GAS LEAK. CONTACT A LOCAL PROPANE GAS SUPPLIER ABOUT INSTALLING A GAS DETECTING WARNING DEVICE.

IMPORTANT NOTE: Propane gas conversion kits must be installed to convert units to propane gas. Refer to the gas piping section for the correct LP kit for conversion.

All propane gas equipment must conform to the safety standards of the National Board of Fire Underwriters (See NBFU Manual 58).

For satisfactory operation, propane gas supply pressure must be within 9.7 - 10.3 inches W.C. at the manifold with all gas appliances in operation. Maintaining proper gas pressure depends on three main factors:

1. Vaporization rate, which depends on (a) temperature of the liquid, and (b) wetted surface area of the container or containers.
2. Proper pressure regulation.
3. Pressure drop in lines between regulators, and between second stage regulator and the appliance. Pipe size required will depend on length of pipe run and total load of all appliances.

Tanks and Piping

Complete information regarding tank sizing for vaporization, recommended regulator settings and pipe sizing is available from most regulator manufacturers and propane gas suppliers.

Since propane gas will quickly dissolve white lead or most standard commercial compounds, special pipe dope must be used. Shellac base compounds resistant to the actions of liquefied petroleum gases such as Gasolac®, Stalactic®, Clyde's® or John Crane® are satisfactory.

See following graphic for typical propane gas piping.

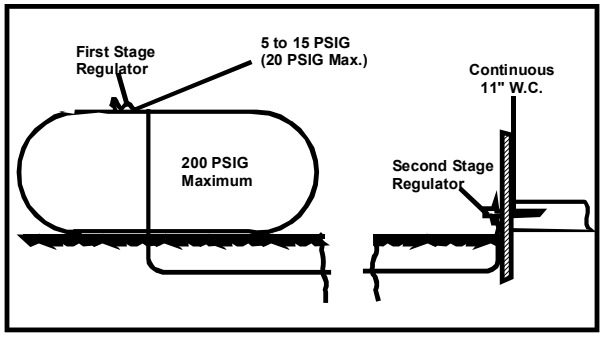

Typical Propane Gas Piping

Sizing Between First and Second Stage Regulator
Maximum Propane Capacities listed are based on 1 PSIG Pressure Drop at 10 PSIG Setting. Capacities in 1,000 BTU/HR

PIPE OR TUBING LENGTH, FEET	TUBING SIZE, O.D., TYPE L					NOMINAL PIPE SIZE, SCHEDULE 40	
	3/8"	1/2"	5/8"	3/4"	7/8"	1/2"	3/4"
30	309	700	1,303	2,205	3,394	1,843	3,854
40	265	599	1,115	1,887	2,904	1,577	3,298
50	235	531	988	1,672	2,574	1,398	2,923
60	213	481	896	1,515	2,332	1,267	2,649
70	196	446	824	1,394	2,146	1,165	2,437
80	182	412	767	1,297	1,996	1,084	2,267
90	171	386	719	1,217	1,873	1,017	2,127
100	161	365	679	1,149	1,769	961	2,009
150	130	293	546	923	1,421	772	1,613
200	111	251	467	790	1,216	660	1,381
250	90	222	414	700	1,078	585	1,224
300	89	201	378	634	976	530	1,109
350	82	185	345	584	898	488	1,020
400	76	172	321	543	836	454	949

To convert to Capacities at 15 PSIG Settings -- Multiply by 1.130
To convert to Capacities at 5 PSIG Settings -- Multiply by 0.879

Sizing Between Single or Second Stage Regulator and Appliance*
Maximum Propane Capacities Listed are Based on 1/2" W.C. Pressure Drop at 11" W.C. Setting. Capacities in 1,000 BTU/HR

PIPE OR TUBING LENGTH, FEET	TUBING SIZE, O.D., TYPE L					NOMINAL PIPE SIZE, SCHEDULE 40				
	3/8"	1/2"	5/8"	3/4"	7/8"	1/2"	3/4"	1"	1-1/4"	1-1/2"
10	49	110	206	348	539	291	608	1,146	2,353	3,525
20	34	76	141	239	368	200	418	788	1,617	2,423
30	27	61	114	192	296	161	336	632	1,299	1,946
40	23	52	97	164	253	137	284	541	1,111	1,665
50	20	46	86	146	224	122	255	480	985	1,476
60	19	42	78	132	203	110	231	436	892	1,337
80	16	36	67	113	174	94	198	372	764	1,144
100	14	32	59	100	154	84	175	330	677	1,014
125	12	28	52	89	137	74	155	292	600	899
150	11	26	48	80	124	67	141	265	544	815
200	10	22	41	69	106	58	120	227	465	697
250	9	19	36	61	94	51	107	201	412	618
300	8	18	33	55	85	46	97	182	374	560
350	7	16	30	51	78	43	89	167	344	515
400	7	15	28	47	73	40	83	156	320	479

*DATA IN ACCORDANCE WITH NFPA PAMPHLET NO. 54

Propane Gas Sizing

WARNING

TO AVOID PROPERTY DAMAGE OR SERIOUS PERSONAL INJURY DUE TO FIRE OR EXPLOSION CAUSED BY A PROPANE GAS LEAK, INSTALL A GAS DETECTING WARNING DEVICE.
IF THE PROPANE GAS UNIT IS INSTALLED IN AN EXCAVATED AREA OR A CONFINED SPACE, A WARNING DEVICE IS REQUIRED DUE TO:

- **PROPANE GAS IS HEAVIER THAN AIR AND ANY LEAKING GAS CAN SETTLE SETTLE IN ANY LOW AREAS OR CONFINED SPACES.**
- **PROPANE GAS ODORANT MAY FADE, MAKING THE GAS UNDETECTABLE EXCEPT WITH A WARNING DEVICE.**

WIRING

WARNING

HIGH VOLTAGE!
DISCONNECT ALL POWER BEFORE SERVICING OR INSTALLING THIS UNIT. MULTIPLE POWER SOURCES MAY BE PRESENT. FAILURE TO DO SO MAY CAUSE PROPERTY DAMAGE, PERSONAL INJURY OR DEATH.

NOTE: All wiring should be made in accordance with the National Electrical Code.

Consult your local Power Company to determine the availability of sufficient power to operate the unit. Check the voltage, frequency, and phase at the power supply to ensure it corresponds to the unit's RATED VOLTAGE REQUIREMENT.

In accordance with the N.E.C. or local codes, install a branch circuit fused disconnect near the unit. Determine wire sizes and overcurrent protection from the unit nameplate ampacity and in accordance with the Minimum Filter Size or the N.E.C. The wiring should never be sized smaller than is recommended by either of these two sources.

Fuses smaller than that recommended on the rating plate could result in unnecessary fuse failure or service calls. The use of protective devices of larger size than indicated could result in extensive damage to the equipment. The manufacturer bears no responsibility for damage caused to equipment as result of the use of larger than is recommended size protective devices.

All units have undergone a run test prior to packaging for shipment. This equipment has been started at minimum rated voltage and checked for satisfactory operation. Do not attempt to operate this unit if the voltage is not within the minimum and maximum voltages shown on nameplate.

All exterior wiring must be within approved weatherproof conduit. The unit must be permanently grounded in accordance with local codes, or in absence of local codes, with N.E.C. ANSI/ NFPA NO. 70-1984 or latest edition by using ground lug in the control box.

Fuses or HACR type circuit breakers may be used where codes permit.

IMPORTANT NOTE: Some single phase units are equipped with a single-pole contactor. Exercise caution when servicing as only one leg of the power supply is broken with the contractor.

HIGH VOLTAGE WIRING

Rated Voltage	Minimum Supply Voltage	Maximum Supply Voltage
208/230V	197	253

The unit transformer is factory connected for 230V operation. If the unit is to operate on 208V, reconnect the transformer primary lead as shown on the unit wiring diagram. The induced draft blower on some models is equipped with a low speed 230V lead (blue) and a low speed 208V lead (black). If equipped, connect the induced draft blower low speed 208V lead (black) in place of the low speed 230V lead (blue). Place the unused 230V lead on the "PARK" terminal located on ignition control.

- Single Phase. Connect two leads to terminals L1 & L2 in the electrical control section, using wire sizes specified in wiring table.

Maximum Allowable Length in Feet to Limit Voltage Drop to 2%	15	20	25	30	35	40	45	50
Supply Wire Length - Feet								
200	6	4	4	4	3	3	2	2
150	8	6	6	4	4	4	3	3
100	10	8	8	6	6	6	4	4
50	14	12	10	8	8	8	6	6

Wiring Table

THERMOSTAT CONTROLS

Recommended: TSTATGTS3275 (Emerson Dual Fuel thermostat) with TSTATTSORS outdoor temperature sensor.

ALTERNATE: A 1-stage cool/2-stage heat pump thermostat with OTDFPKG-01 outdoor temperature sensor kit.

IMPORTANT NOTE: For optimal performance, an outdoor temperature sensor should be used with the control thermostat to determine when the unit switches from heat pump mode to gas mode. The unit is compatible with a standard heat pump thermostat with a minimum of 1 cool - 2 heat. If an outdoor sensor is not installed, the gas will not ignite until the control thermostat calls for a 2nd stage of heat.

LOW VOLTAGE WIRING

- Heat Pumps. Connect 24V wires from the thermostat to the corresponding wires in the control box using No. 18 AWG as shown in the table below:

[A/G]PD14 Terminal Wire	24 - 48 Thermostat
Red	R (24V)
Green	G (fan)
Orange	O (rev. valve)
White	W1 (heat, 2nd)
Brown	W2 (heat, 3rd)
Yellow	Y (cool)
Blue	C (24V Common)

Internal Wiring

A diagram detailing the internal wiring of this unit is located on the Goodman labeled access panel. If any of the original wire supplied with the appliance must be replaced, the wire gauge and insulation must be the same as the original wiring.

1. For branch circuit wiring (main power supply to unit disconnect), the minimum wire size for the length of run can be determined using the circuit ampacity found on the unit rating plate and the table below. From the unit disconnect to the unit, the smallest wire size allowable may be used for the ampacity, as the disconnect must be in sight of the unit.
2. Wire size based on 60°C rated wire insulation and 30°C Ambient Temperature (86°F).
3. For more than three conductors in a raceway or cable, see the N.E.C. for derating the ampacity of each conductor.

WARNING

To prevent improper and dangerous operation due to wiring errors, label all wires prior to disconnection when servicing controls. Verify proper operation after servicing.

CAUTION

To avoid property damage or personal injury due to fire, use only copper conductors.

WARNING

To avoid electrical shock, wiring to the unit must be polarized and grounded.

For unit protection, use a fuse or hacr circuit breaker that is in excess of the circuit ampacity, but less than or equal to the maximum overcurrent protection device. DO NOT EXCEED THE MAXIMUM OVERCURRENT DEVICE SIZE SHOWN ON UNIT DATA PLATE.

All line voltage connections must be made through weatherproof fittings. All exterior power supply and ground wiring must be in approved weatherproof conduit. Low voltage wiring from the unit control panel to the thermostat requires coded cable. See below for ground level and rooftop wiring.

CIRCULATING AIR AND FILTERS

Airflow Conversion

Units can easily be converted from horizontal to down-discharge airflow delivery. In down-discharge or high static installations, the installer should measure the total external static and review the blower performance charts before performing the installation. In some installations it will be necessary to change the blower speed to provide proper air flow.

Horizontal Air Flow

Single phase models are shipped without horizontal duct covers. If needed, these kits may be ordered through Goodman's Service Parts department.

Down Discharge Applications

Cut insulation around bottom openings and remove panels from the bottom of the unit, saving the screws holding the panels in place.

NOTE: Single phase models require installation of horizontal duct kit #20464501PDGK (medium chassis) and #20464502PDGK (large chassis). See "Unit Dimensions" section for chassis sizes.

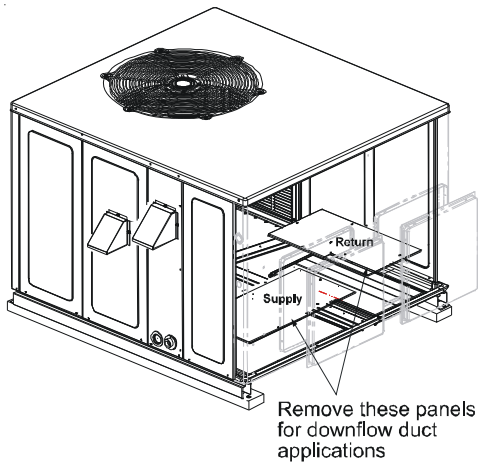

Duct Cover Installation

Ductwork

Duct systems and register sizes must be properly designed for the C.F.M. and external static pressure rating of the unit. Ductwork should be designed in accordance with the recommended methods of Air Conditioning Contractors of America Manual D (Residential) or Manual Q (Commercial). All ductwork exposed to the outdoors must include a weatherproof barrier and adequate insulation.

A duct system should be installed in accordance with Standards of the National Board of Fire Underwriters for the Installation of Air Conditioning, Warm Air Heating and Ventilating Systems. Pamphlets No. 90A and 90B.

The supply duct from the unit through a wall may be installed without clearance. However, minimum unit clearances as shown in the appendix must be maintained. The supply duct should be provided with an access panel large enough to inspect the air chamber downstream of the heat exchanger. A cover should be tightly attached to prevent air leaks.

For duct flange dimensions on the unit refer to the Unit Dimension illustration in the appendix.

For down-discharge applications, the ductwork should be attached to the roof curb prior to installing the unit. Ductwork dimensions are shown in the roof curb installation manual.

If desired, supply and return duct connections to the unit may be made with flexible connections to reduce possible unit operating sound transmission.

Filters

CAUTION

To prevent property damage due to fire and loss of equipment efficiency or equipment damage due to dust and lint build-up on internal parts, never operate the unit without an air filter installed in the return air system.

Even though a return air filter is not supplied with this unit, there must be a means of filtering all return air. All units may be externally filtered.

Refer to the unit filter size chart in the appendix for filter size information.

Filters installed external to the unit should be sized in accordance with their manufacturer recommendations. A throwaway filter must be sized for a maximum face velocity of 300 feet per minute.

Filter Installation

IMPORTANT NOTE: When installing a filter, the air flow arrows on the filter must point toward the circulator blower.

VENTING

NOTE: Venting is self-contained. Do not modify or block.

Installation - Flue Hood Exhaust

1. Locate the flue hood assembly box from the blower compartment.
2. Slide screen over flanges on the lower flue hood.
3. Slide screen into hood.
4. Using the three screws provided, attach the hood (with the opening facing down) over the flue exhaust opening in the utility panel.

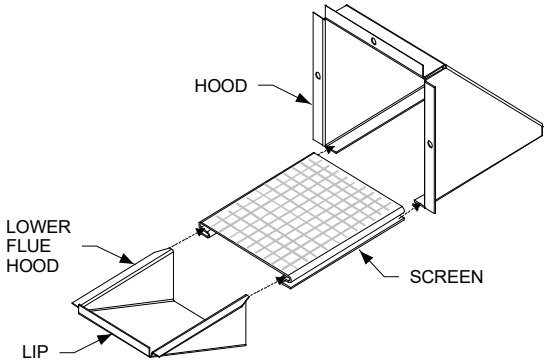

Installation - Combustion Air Intake Hood

1. Locate the second hood.
2. Using the three screws provided, attach the hood (with the opening facing down) to the heat exchanger access door.

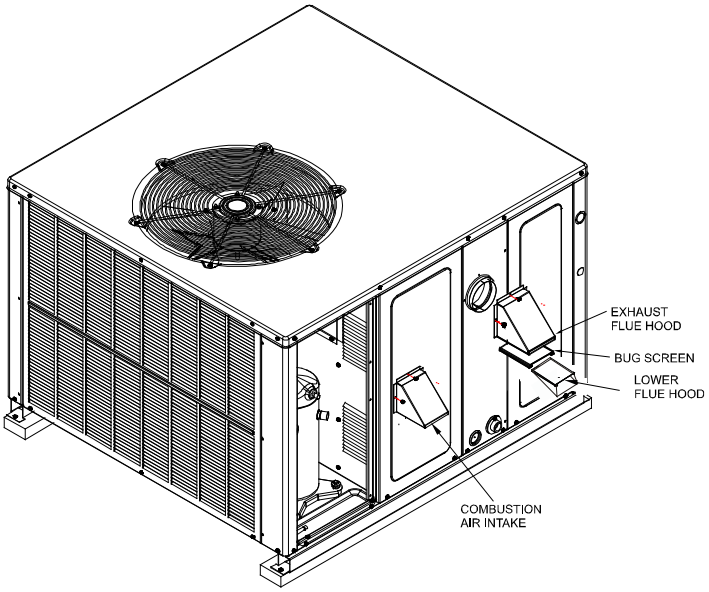

CONDENSATE DRAIN

Condensate Drain Connection

A 3/4” NPT drain connection is supplied for condensate piping. An external trap must be installed for proper condensate drainage.

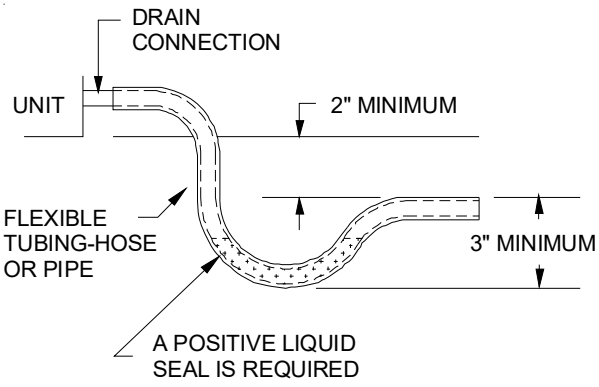

Drain Connection

NORMAL SEQUENCES OF OPERATION

HEAT PUMP OPERATION

Outdoor Thermostat

For optimal performance, a dual fuel thermostat with an outdoor temperature sensor should be used. TSTATGTS3275 (Emerson Dual Fuel thermostat) with TSTATTSORS (outdoor temperature sensor) is recommended.

This will allow the installer to control when the unit switches from heat pump to gas heat based on a set point entered into the thermostat. It is recommended to set the thermostat between 35° - 45°F, depending on regional climate and energy rates.

Optional Outdoor Thermostat (OTDFPKG-01)

The outdoor thermostat is an optional accessory that can be set from 0 - 45°F and is set inside a “birdhouse”

enclosure. This enclosure will be mounted near the blower access panel. The dimples and knock-out are located on the corner posts, providing ease of installation. Once the thermostat closes, a 24 volt signal is sent to the W1 terminal instead of the Y terminal and the heating cycle will change from Heat Pump to Gas heating. It is recommended to set the thermostat between 35-45°F depending on regional climate and energy rates.

Heating Cycle (Heat Pump)

The heat pump operates in the heating cycle by redirecting refrigerant flow through the refrigerant circuit external to the compressor. This is accomplished through the reversing valve. Hot discharge vapor from the compressor is directed to the indoor coil (evaporator on the cooling cycle) where the heat is removed, and the vapor condenses to liquid. It then goes through the expansion device to the outdoor coil (condenser on the cooling cycle) where the liquid is evaporated, and the vapor goes to the compressor.

When the solenoid valve coil is energizing for cooling, the piston in the reversing valve to the low pressure (high pressure) reverse positions in the reversing valve. In addition to a reversing valve, a heat pump is equipped with an expansion device for the indoor coil, and similar equipment for the outdoor coil is provided with a defrost control system.

Heating Cycle (Natural Gas/ LP)

1. The Dual Fuel unit will operate in gas heat mode when the thermostat calls for a W-1 or W-2 signal. If outdoor thermostat is installed, the unit will operate in gas heat when ambient is below set point or the unit receives call for low or high stage gas heat.
2. Induced draft blower energizes for 15-second pre-purge.
3. A 7-second trial for ignition begins by energizing the low and high stages of the gas valve along with this spark ignition.
   NOTE: The igniter produces a very intense electrical spark that ignites the gas.
4. Main burners light and control detects presence of flame.
5. If the call is for low stage heat, the induced draft blower switches from high to low speed and the gas valve from high to low stage within 5 seconds after the main burners light. If call is for high stage heat, induced draft blower remains at high speed and high stage gas valve remains open.
   NOTE: If a W2 is not used, the control will step to low stage after the main burners light and remain at low stage for 5 or 10 minutes, depending on jumper position. If the jumper is set to none, you will never get a call for high stage heat. If the call for HEAT remains after the transition delay time expires, the control will transition from low stage to high stage.
6. The 30-second HEAT FAN ON delay time begins after the main burners light.
7. The unit delivers heat to the conditioned space until the thermostat is satisfied.
8. Gas valve(s) de-energizes. The induced draft blower continues operation for a 30-second post-purge.
   NOTE: Induced draft blower remains at low speed (or switches from high to low if operating at high stage heat) for the 30-second post purge.
9. Ignition control begins timing the HEAT FAN OFF delay. There is an adjustable HEAT FAN OFF delay of approximately 90/120/150/180 seconds (factory set at 150). If the unit is operating at high stage when the call for heat is removed, the blower will operate for 30 seconds at high heat speed then switch to low heat speed for the remainder of the selected HEAT FAN OFF delay.
   NOTE: After the HEAT FAN OFF delay time has elapsed, the blower will de-energize. This allows any additional heat in the heat exchanger to be transferred to the conditioned space.

Defrost Cycle

NOTE: The defrost board is equipped with a jumper for SmartShift™ defrost technology operation. This operation turns the compressor off for 30 seconds at defrost initiation and termination. The unit is factory shipped for SmartShift™ defrost technology operation. To operate unit at rated efficiencies, move the jumper on the defrost board from “DLY” to “NORM”.

During operation the power to the circuit board is controlled by a temperature sensor, which is clamped to a feeder tube entering the outdoor coil. Defrost timing periods of 30, 60 and 90 minutes may be selected by setting the circuit board jumper to 30, 60 and 90 respectively.

Accumulation of time for the timing period selected starts when the sensor closes (approximately 34°F), and when the wall thermostat calls for heat. At the end of the timing period, the unit’s defrost cycle will be initiated provided the sensor remains closed.

Upon a call for defrost, the blower will continue to run and the defrost board will send a W1 signal to the ignition control. At the same time the compressor will stop for 30 seconds, if the SmartShift™ defrost technology delay feature is selected on the defrost board. At this time, the reversing valve shifts from heat to cool position and condenser fans shut off. The inducer motor will immediately energize for a 15 second prepurge.

A 7-second trial for ignition begins by energizing the low and high stages of the gas valve along with this spark ignition. Main burners light and control detects presence of flame. The compressor (after its 30/OFF second delay) restarts in cooling mode to defrost the condensor coil.

When the sensor opens (approximately 60°F), the defrost cycle is terminated and the timing period is reset. If the defrost cycle is not terminated due to the sensor temperature, a twelve minute override interrupts the unit’s defrost period. At this time the W1 signal is removed from the ignition control board, the compressor will stop for a 30 second SmartShift™ defrost technology delay (if selected)

and the reversing valve slides back to its normal heat position.

Cooling

1. Thermostat calls for cooling.
2. When the thermostat call is for cooling, the compressor and outdoor fan are energized .
3. The indoor blower will energize approximately 6 seconds later.
4. The unit delivers cooling to the conditioned space until the thermostat is satisfied.
5. The compressor and outdoor fan will be de-energized when the thermostat opens.
6. The indoor blower continues to run at low cool speed for approximately 60 seconds after the thermostat is satisfied. This allows additional cooling from the indoor coil to be transferred to the conditioned space. Then, the indoor blower is de-energized.
   NOTE: A 180-second anti-short cycle is integral to the control and prevents recycling of the compressor.

Cooling Operation

NOTE: Mechanical cooling cannot be reliably provided at ambient temperatures below 50° F.

1. Turn on the electrical power supply to the unit.
2. Place the room thermostat selector switch in the COOL position (or AUTO if available, and if automatic changeover from cooling to heating is desired).
3. Set the room thermostat to the desired temperature.

Fan Only

1. Thermostat calls for FAN ONLY by energizing “G”.
2. The indoor blower is immediately energized at the low heat speed.
3. The indoor blower is immediately de-energized once thermostat call for FAN is removed.

Air flow Measurement and Adjustment

Please review the Duct Work section before proceeding with the airflow measurements and adjustments in this section.

Unit blower curves (see Specification Sheets) are based on external static pressure (ESP per in/W.C.). The duct openings on the unit are considered internal static pressure. As long as ESP is maintained, the unit will deliver the proper air up to the maximum static pressure listed for the CFM required by the application (i.e. home, building, etc.)

In general, 400 CFM per ton of cooling capacity is a rule of thumb. Some applications depending on the sensible and latent capacity requirements may need only 350 CFM or up to 425 CFM per ton. Check condition space load requirements (from load calculations) and equipment expanded ratings data to match CFM and capacity.

After unit is set and duct work completed, verify the ESP with a 1-inch inclined manometer with pilot tubes or a Magnahelic gauge and confirm CFM to blower curves in the Specification Sheets.

NOTE: Never run CFM below 350 CFM per ton, evaporator freezing or poor unit performance is possible.

Air Flow Adjustments For Indoor Blower Motor

EEM Motor

Adjust the CFM by changing the 24V low voltage lead at the speed terminal block on the motor. (T1, T2, T3, T4, T5). See Blower Performance Data in the appendix for airflow delivered at each speed tap.

NOTE: Factory set T1 (G, fan and low stage gas heat), T2 (high stage gas heat, T4 (nominal heat pump / cooling).

T3 is for optional low speed cooling and heat pump. T5 is for optional high speed cooling and heat pump.

START-UP, ADJUSTMENTS, AND CHECKS

Heating Start-up (Natural Gas / LP)

This unit is equipped with an electronic ignition device to automatically light the main burners. It also has a power vent blower to exhaust combustion products.

On new installations, or if a major component has been replaced, the operation of the unit must be checked.

Check unit operation as outlined in the following instructions. If any sparking, odors, or unusual sounds are encountered, shut off electrical power and check for wiring errors, or obstructions in or near the blower motors.

Rollout Protection Control

WARNING

To avoid property damage, personal injury or death due to fire or explosion, a qualified servicer must investigate the reason for the rollout protection device to open BEFORE manually resetting the rollout protection device.

The rollout protection device opens, cutting power to the gas valve, if the flames from the burners are not properly drawn into the heat exchanger. The rollout protection device is located on the burner bracket. The reason for elevated temperatures at the control must be determined and repaired prior to resetting this manual reset control.

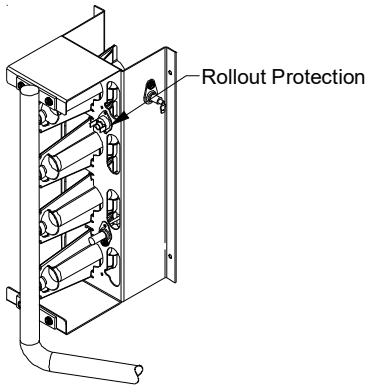

Rollout Protection on Burner Bracket

Secondary Limit Control

The secondary limit control is located on the top of the blower scroll assembly. This control opens when elevated temperatures are sensed. Elevated temperatures at the control are normally caused by blower failure.

If the power to the unit is interrupted during the heating cycle, it may cause the secondary limit to trip. Once the blower compartment temperature drops below the limit reset temperature, the limit will automatically reset.

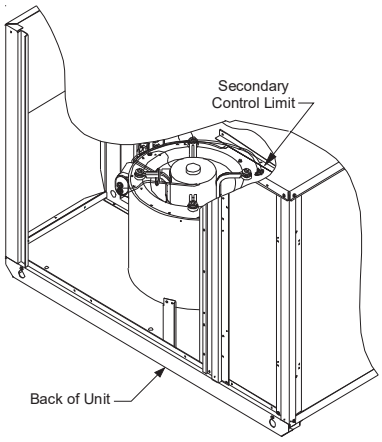

Secondary Control Limit

Pre-Operation Checks

1. Close the manual gas valve external to the unit.
2. Turn off the electrical power supply to the unit.
3. Set the room thermostat to its lowest possible setting.
4. Remove the heat exchanger door on the side of the unit by removing screws.
5. This unit is equipped with an ignition device which automatically lights the main burner. DO NOT try to light burner by any other method.
6. Move the gas control valve switch to the OFF position. Do not force.
7. Wait five minutes to clear out any gas.
8. Smell for gas, including near the ground. This is important because some types of gas are heavier than air. If you have waited five minutes and you do smell gas, immediately follow the warnings on page 4 of this manual. If having waited for five minutes and no gas smell is noted, move the gas control valve switch to the ON position.
9. Replace the heat exchanger door on the side of the unit.
10. Open the manual gas valve external to the unit.
11. Turn on the electrical power supply to the unit.
12. Set the thermostat to desired setting.

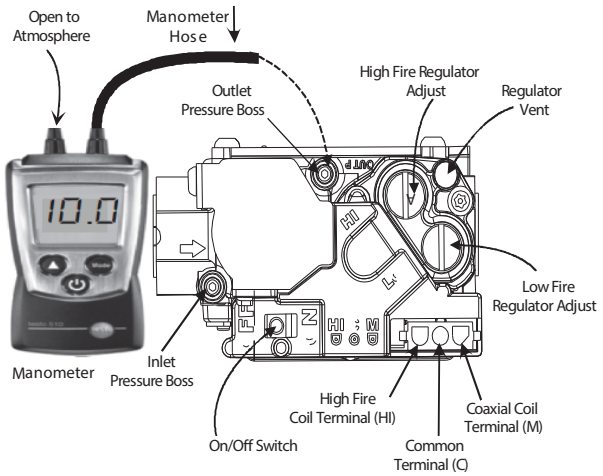

White-Rodges Model 36G54 connected to Manometer

Gas Supply And Manifold Check

Gas supply pressure and manifold pressure with the burners operating must be as specified on the rating plate. **NOTE:** Use adapter kit #0151K00000S to measure gas pressure on White-Rodgers 36G54 gas valves.

Gas Inlet Pressure Check

Gas inlet pressure must be checked and adjusted in accordance to the type of fuel being consumed.

With Power And Gas Off:

1. Connect a water manometer or adequate gauge to the inlet pressure tap of the gas valve.
   Inlet gas pressure can also be measured by removing the cap from the drip leg and installing a predrilled cap with a hose fitting.

With Power And Gas On:

2. Put unit into heating cycle and turn on all other gas consuming appliances.

INLET GAS PRESSURE	
Natural	Min 5.0” W.C., Max 10.0” W.C.
Propane	Min 11.0” W.C., Max 13.0” W.C.

NOTE: Inlet Gas Pressure Must be within the Minimum and Maximum Value Shown in the Inlet Gas Pressure chart.

If operating pressures differ from above, make necessary pressure regulator adjustments, check piping size, etc., and/or consult with local utility.

Manifold Pressure Check

1. Turn OFF gas to furnace at the manual gas shutoff valve external to the furnace.
2. Turn off all electrical power to the system.
3. Back outlet pressure test screw (inlet/outlet pressure boss) out one turn (counterclockwise, not more than one turn).
4. Attach a hose and manometer to the outlet pressure

boss of the valve.

5. Turn ON the gas supply.
6. Turn on power and energize main (M) solenoid. Do not energize the HI solenoid.
7. Measure gas manifold pressure with burners firing. Adjust manifold pressure using the Manifold Gas Pressure table.
8. Remove regulator cover screw from the low (LO) outlet pressure regulator adjust tower and turn screw clockwise to increase pressure, or counterclockwise to decrease pressure.
9. Energize main (M) solenoid as well as the HI terminal.
10. Remove regulator cover screw from the HI outlet pressure regulator adjust tower and turn screw clockwise to increase pressure, or counterclockwise to decrease pressure.
11. Turn off all electrical power and gas supply to the system.
12. Remove manometer hose from outlet pressure boss.
13. Turn outlet pressure test screw in to seal pressure port (clockwise, 7 in-lb minimum).
14. Turn on electrical power and gas supply to the system.
15. Turn on system power and energize valve.
16. Using a leak detection solution or soap suds, check for leaks at pressure boss screw. Bubbles forming indicate a leak. SHUT OFF GAS AND FIX ALL LEAKS IMMEDIATELY.

NOTE: For gas to gas conversion, consult your dealer for appropriate conversion.

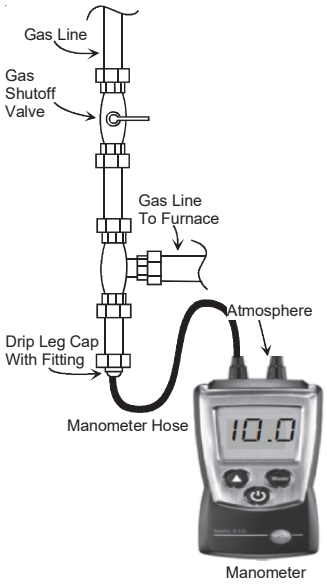

Measuring Inlet Gas Pressure
Alternate Method

Manifold Gas Pressure			
Gas		Range	Nominal
Natural	Low Stage	1.6 -2.2” W.C.	2.0” W.C.
	High Stage	3.2 - 3.8” W.C.	3.5” W.C.
Propane	Low Stage	5.7 - 6.3” W.C.	6.0” W.C.
	High Stage	9.7 - 10.3” W.C.	10.0” W.C.

Manifold Gas Pressure

Gas BTU Input (Natural Gas Only) Check

To measure the gas input use a gas meter and proceed as follows:

1. Turn off gas supply to all other appliances except the unit.
2. With the unit operating, time the smallest dial on the meter for one complete revolution. If this is a 2 cubic foot dial, divide the seconds by 2; if it is a 1 cubic foot dial, use the seconds as is. This gives the seconds per cubic foot of gas being delivered to the unit.
3. INPUT=GAS HTG VALUE x 3600 / SEC. PER CUBIC FOOT
   Example: Natural gas with a heating value of 1000 BTU per cubic foot and 34 seconds per cubic foot as determined by Step 2, then:
   Input = 1000 x 3600 / 34 = 106,000 BTU per Hour.
   NOTE: BTU content of the gas should be obtained from the gas supplier. This measured input must not be greater than shown on the unit rating plate.
4. Relight all other appliances turned off in step 1. Be sure all pilot burners are operating.

Main Burner Flame Check

Flames should be stable, soft and blue (dust may cause orange tips but they must not be yellow) and extending directly outward from the burner without curling, floating or lifting off.

Temperature Rise Check

Check the temperature rise through the unit by placing thermometers in supply and return air registers as close to the unit as possible. Thermometers must not be able to sample temperature directly from the unit heat exchangers, or false readings could be obtained.

1. All registers must be open; all duct dampers must be in their final (fully or partially open) position and the unit operated for 15 minutes before taking readings.
2. The temperature rise must be within the range specified on the rating plate

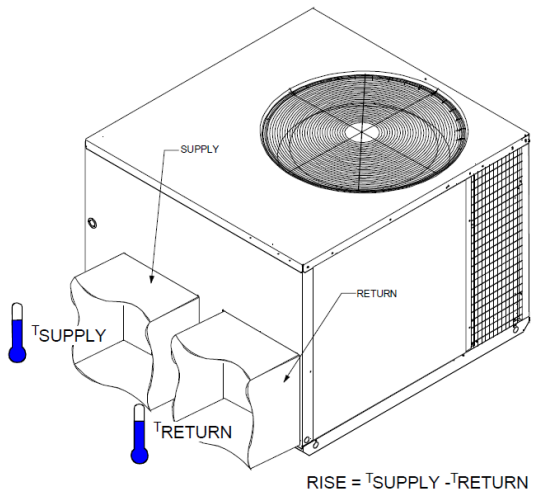

Temperature Rise Check

NOTE: Air temperature rise is the temperature difference between supply and return air.

With a properly designed system, the proper amount of temperature rise will normally be obtained when the unit is operated at rated input with the recommended blower speed.

If the correct amount of temperature rise is not obtained, it may be necessary to change the blower speed. A higher blower speed will lower the temperature rise. A slower blower speed will increase the temperature rise.

NOTE: Blower speed MUST be set to give the correct air temperature rise through the unit as marked on the rating plate.

External Static Pressure Check

The total external static pressure must be checked on this unit to determine if the airflow is proper.

1. Using a digital manometer measure the static pressure of the return duct at the inlet of the unit, (Negative Pressure).

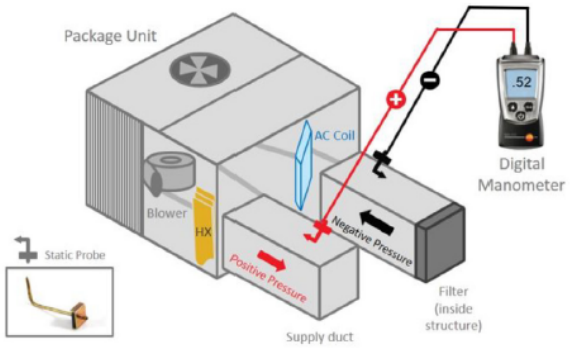

Total External Static

2. Measure the Static pressure of the supply duct, (Positive Pressure).
3. Add the two readings togther.
   NOTE: Both readings may be taken simultaneously and read directly on the manometer if so desired.
4. Consult proper table for quantitu of air.

If the external static pressure exceeds the minimum or maximum allowable statics, check for closed dampers, dirty filters, undersizd or poorly laid out ductwork.

Blower Speed Adjustments

WARNING

TO AVOID PERSONAL INJURY OR DEATH DUE TO ELECTRIC SHOCK, REMOVE ELECTRICAL POWER FROM THE UNIT BEFORE CHANGING SPEED TAPS ON THE BLOWER MOTOR.

Refer to the wiring diagram and airflow data in the appendix to verify speed tap settings.

Depending upon the model, blower speeds are changed at the indoor blower. The ignition control board has four blower speeds: LOW HEAT, HI HEAT, LOW COOL and HIGH COOL.

NOTE: FAN ONLY energizes at LOW HEAT speed.

The *PD14 models are equipped with EEM motors. EEM motors are constant torque motors with very low power consumption. This motor is energized by 24VAC. Adjust the CFM for the unit by changing the 24VAC leads to the speed terminal block on the motor.

NOTE: Heating airflow must be adjusted to provide the temperature rise shown on rating plate. A higher speed tap may not provide more airflow. Blower speeds are programmed to deliver adequate airflow at rated external static pressure (ESP). Refer to airflow table provided in the Appendix for details.

GAS HEATING			COOLING		
Lead Color	Speed Tap	Definition	Lead Color	Speed Tap	Definition
White	T1	Low Speed Heat		T3	Cool/HP Optional Low Speed
Brown	T2	High Speed Heat	Yellow	T4	Cool/HP Speed
				T5	High Static

Limit Check

Check limit control operation after 15 minutes of operation by blocking the return air grille(s).

1. After several minutes the main burners must go OFF. Blower will continue to run.
2. Remove air restrictions and main burners will relight after a cool down period of a few minutes.

Adjust the thermostat setting below room temperature.

1. Main burners must go OFF.
2. Circulating Air Blower will continue to run for 90, 120, 150 or 180 seconds, depending on the setting.

NOTE: If necessary, adjust fan OFF delay settings to obtain satisfactory comfort level.

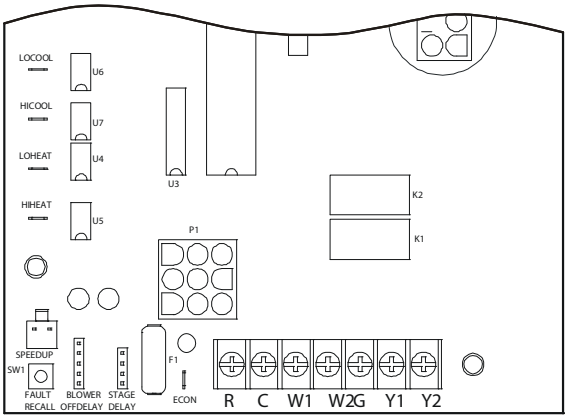

Control Board (Top)

Unit Shutdown

WARNING

THIS UNIT MUST NOT BE USED AS A "CONSTRUCTION HEATER" DURING THE FINISHING PHASES OF CONSTRUCTION ON A NEW STRUCTURE. THIS TYPE OF USE MAY RESULT IN PREMATURE FAILURE OF THE UNIT DUE TO EXTREMELY LOW RETURN AIR TEMPERATURES AND EXPOSURE TO CORROSIVE OR VERY DIRTY ATMOSPHERES.

1. Set the thermostat to lowest setting.
2. Turn off the electrical power supply to the unit.
3. Remove the heat exchanger door on the side of the unit by removing screws.
4. Move the gas control valve switch to the OFF position. Do not force.
5. Close manual gas shutoff valve external to the unit.
6. Replace the heat exchanger door on the unit.
7. If cooling and/or air circulation will be desired, turn ON the electrical power.

COOLING START-UP

WARNING

TO PREVENT PERSONAL INJURY OR DEATH, ALWAYS DISCONNECT ELECTRICAL POWER BEFORE INSPECTING OR SERVICING THE UNIT. NOTE: ALL COMPRESSOR PROTECTION DEVICES RESET AUTOMATICALLY, ENERGIZING THE CONTACTOR AND OUTDOOR FAN.

NOTE: Check all manual reset limit controls in heating circuit if cooling mode does not operate.

SUPERHEAT

CHECKING SUPERHEAT

Refrigerant gas is considered superheated whenever its temperature is higher than the saturation temperature corresponding to its pressure. The degree of superheat equals the degrees of temperature increase above the saturation temperature at existing pressure.

1. Run system at least 10 minutes to allow pressure to stabilize.
2. Temporarily install thermometer on suction (large) line near compressor with adequate contact and insulate for best possible reading.
3. Refer to the superheat table provided for proper system superheat. Add charge to lower superheat or recover charge to raise superheat.
   Superheat Formula = Suct. Line Temp. - Sat. Suct. Temp.

Ambient Condenser Inlet Temp (°F Drybulb)	Return Air Temp. (°F Drybulb)				
	65	70	75	80	85
100	-	-	-	10	10
95	-	-	10	10	10
90	-	-	12	15	18
85	-	10	13	17	20
80	-	10	15	21	26
75	10	13	17	25	29
70	10	17	20	28	32
65	13	19	26	32	35
60	17	25	30	33	37

EXAMPLE:

a. Suction Pressure = 143

b. Corresponding Temp. °F. = 50

c. Thermometer on Suction Line = 59°F.

To obtain the degrees temperature of superheat, subtract 50.0 from 59.0°F.

The difference is 9° Superheat. The 9° Superheat would fall in the ± range of allowable superheat.

CHECKING SUBCOOLING

Refrigerant liquid is considered subcooled when its temperature is lower than the saturation temperature corresponding to its pressure. The degree of subcooling equals the degrees of temperature decrease below the saturation temperature at the existing pressure.

1. Attach an accurate thermometer or preferably a thermocouple type temperature tester to the liquid line close to the pressure switch.
2. Install a high side pressure gauge on the liquid access fitting.
3. Record the gauge pressure and the temperature of the line.
4. Compare the hi-pressure reading to the "Required Liquid Line Temperature" chart. Find the hi-pressure value on the left column. Follow that line right to the column under the design subcooling value. Where the two intersect is the required liquid line temperature. Alternately you can convert the liquid line pressure gauge reading to temperature by finding the gauge reading in Temperature - Pressure Chart and reading to the left, find the temperature in the °F. Column.

5. The difference between the thermometer reading and pressure to temperature conversion is the amount of subcooling.

Subcooling Formula = Sat. Liquid Temp. - Liquid Line Temp.

EXAMPLE:

a. Liquid Line Pressure = 417

b. Corresponding Temp. °F. = 120°

c. Thermometer on Liquid line = 109°F.

To obtain the amount of subcooling, subtract 109°F from 120°F.

The difference is 11° subcooling. See the specification sheet or technical information manual for the design subcooling range for your unit.

See R410A Pressure vs. Temperature chart.

Compressor Protection Devices

The compressor includes components which are designed to protect the compressor against abnormal operating conditions.

Refrigerant Charge Check (Units with Fixed Orifice Devices)

After completing airflow measurements and adjustments the unit's refrigerant charge must be checked. The unit comes factory charged, but this charge is based on 325 CFM per ton and minimum ESP per AHRI test conditions (generally between .15 -.28 ESP). When air quantity or ESP is different than above, the refrigerant charge must be adjusted to the proper amount. All package units with fixed orifice devices are charged using the super heat method at the compressor suction line.

After superheat is adjusted it is recommended to check unit sub-cooling at the condenser coil liquid line out. For charge adjustments, see superheat and subcooling charts shown for each model.

MAINTENANCE

WARNING

HIGH VOLTAGE!
DISCONNECT ALL POWER BEFORE SERVICING OR INSTALLING THIS UNIT. MULTIPLE POWER SOURCES MAY BE PRESENT. FAILURE TO DO SO MAY CAUSE PROPERTY DAMAGE, PERSONAL INJURY OR DEATH.

Have the gas heating section of the unit checked at least once a year before the heating season begins, to be sure that the combustion air inlet and flue outlet hoods are not blocked by debris, which would prevent adequate combustion air and a properly operating vent system.

Filter Replacement or Cleaning

A return air filter is not supplied with this unit; however, there must be a means of filtering all of the return air. The filter(s) may be located in the return air duct(s), or return air filter grille(s). Consult with your installing dealer for the actual location of the return air filter(s) for your unit.

Dirty filters are the most common cause of inadequate heating or cooling performance. Filter inspection should be made at least every two months; more often if necessary because of local conditions and usage.

Dirty throwaway filters should be discarded and replaced with a new, clean filter. Dirty permanent filters should be washed with water, thoroughly dried and sprayed with a filter adhesive before being reinstalled. (Filter adhesives may be found at many hardware stores.) Permanent filters should last several years. However, should one become torn or uncleanable, it should be replaced.

Cabinet Finish Maintenance

Use a fine grade automotive wax on the cabinet finish to maintain the finish's original high luster. This is especially important in installations with extended periods of direct sunlight.

Clean Outside Coil (Qualified Servicer Only)

The coil with the outside air flowing over it should be inspected annually and cleaned as frequently as necessary to keep the finned areas free of lint, hair and debris.

Condenser, Evaporator, and Induced Draft Motors

Bearings on the air circulating blower motor, condenser motor and the combustion fan motor are permanently lubricated. No additional oiling is required.

Flame Sensor (Qualified Servicer Only)

A drop in the flame current can be caused by a nearly invisible coating on the flame sensor. This coating, created by the fuel or combustion air supply, can be removed by carefully cleaning the flame sensor with steel wool.

NOTE: After cleaning, the microamp signal should be stable and in the range of 4 - 6 microamps DC.

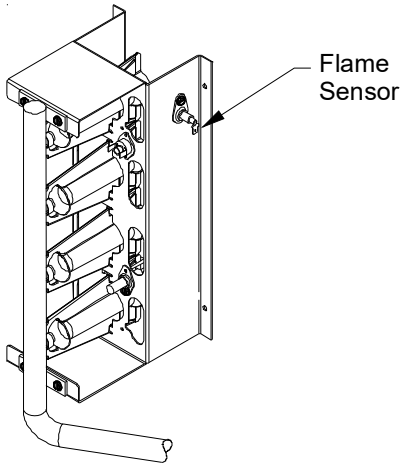

Flame Sensor

Flue Passages (Qualified Servicer Only)

At the start of each heating season, inspect and, if necessary, clean the unit flue passage.

1. Shut off electric power and gas supply to the unit.
2. Remove burner assembly by disconnecting the gas line and removing the manifold bracket from the partition panel.

3. Remove the flue from the induced draft blower and the collector box cover from the partition panel.
4. The primary heat exchanger tubes can be cleaned using a round wire brush attached to a length of high grade stainless steel cable, such as drain cleanout cable. Attach a variable speed reversible drill to the other end of the spring cable. Slowly rotate the cable with the drill and insert it into one of the primary heat exchanger tubes. While reversing the drill, work the cable in and out several times to obtain sufficient cleaning. Use a large cable for the large tube, and then repeat the operation with a small cable for the smaller tube. Repeat for each tube.
5. When all heat exchanger tubes have been cleaned, replace the parts in the reverse order in which they were removed.
6. To reduce the chances of repeated fouling of the heat exchanger, perform the steps listed in “Start-up, Adjustments, and Checks”.

Main Burner Flame (Qualified Servicer Only)

Flames should be stable, soft and blue (dust may cause orange tips but must not be yellow). The flames must extend directly outward from the burner without curling, floating or lifting off.

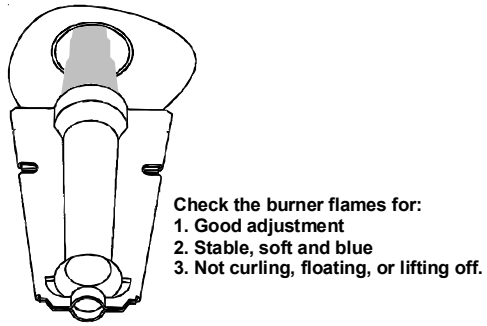

Burner Flame

WARNING

To avoid personal injury or death due to electric shock, do not remove any internal compartment covers or attempt any adjustment. Contact a qualified servicer at once if an abnormal flame should develop.

At least once a year, prior to or during the heating season, make a visual check of the burner flames.

NOTE: This will involve removing and reinstalling the heat exchanger door on the unit, which is held by two screws. If you are uncertain about your ability to do this, contact a qualified servicer.

If a strong wind is blowing, it may alter the airflow pattern within the unit enough that an inspection of the burner flames is not possible.

1. Shut off electric power and gas supply to the unit.
2. Remove the screws securing the manifold to the burner retention bracket. Remove the manifold and rotate each burner counterclockwise to remove.
3. Remove the burners.
4. Use a bottle brush to clean burner insert and inside of the burners.
5. Replace burners and manifold, inspect the burner assembly for proper seating of burners in retention slots.
6. Reconnect electrical power and gas supply.

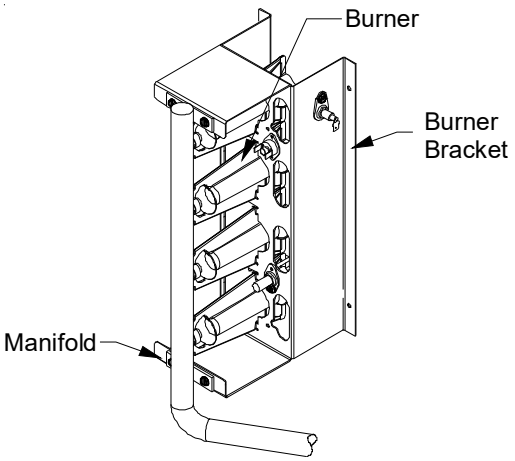

Manifold Assembly

CAUTION

Label all wires prior to disconnection when servicing controls. Wiring errors can cause improper and dangerous operation.

CAUTION

Always verify proper operation after servicing.

For further information on the yearly inspection, consult the User Manual. It is recommended that a qualified servicer inspect and service the unit at least once each year.

Turn the unit on at the thermostat. Wait a few minutes, since any dislodged dust will alter the normal flame appearance. Flames should be predominantly blue and directed into the tubes. They should not be yellow. They should extend directly outward from the burner ports without curling downward, floating or lifting off the ports.

TROUBLESHOOTING

DIAGNOSTIC LED - RED	STATUS	CHECK
ON	NORMAL OPERATION	-
OFF	NO POWER OR INTERNAL CONTROL FAULT	CHECK INPUT POWER CHECK FUSE(S) REPLACE CONTROL
1 FLASH	IGNITION FAILURE	GAS FLOW GAS PRESSURE GAS VALVE FLAME SENSOR
2 FLASHES	PRESSURE SWITCH OPEN	CHECK PRESSURE SWITCH CHECK TUBING CHECK VENT MOTOR
3 FLASHES	PRESSURE SWITCH CLOSED WITHOUT INDUCER ON	CHECK PRESSURE SWITCH CHECK WIRING FOR SHORTS
4 FLASHES	OPEN LIMIT SWITCH	CHECK MAIN LIMIT SWITCH CHECK AUXILIARY LIMIT SW. CHECK ROLLOUT LIMIT SW.
5 FLASHES	FALSE FLAME DETECTED	CHECK GAS VALVE CHECK FOR SHORTS IN FLAME SENSOR WIRING
6 FLASHES	COMPR. SHORT CYCLE DELAY	3 MIN COMP. SHORT CYCLE DELAY
7 FLASHES	LIMIT OPEN 5 TIMES IN SAME CALL FOR HEAT	CHECK MAIN LIMIT SWITCH CHECK AUXILIARY LIMIT SW.
8 FLASHES	IDT/ODT OPEN	CHECK JUMPER BETWEEN 1 AND 4 ON 6-CIRCUIT CONNECTOR CHECK OPTIONAL REFRIGERANT SWITCHES
9 FLASHES	PSW/LOC OPEN	CHECK REFRIGERANT SWITCHES FOR LOSS OF CHARGE OR HIGH HEAD PRESSURE

DIAGNOSTIC LED - AMBER	STATUS	CHECK
OFF	NO FLAME PRESENT	-
ON	NORMAL FLAME PRESENT	-
1 FLASH	LOW FLAME SIGNAL	GAS FLOW GAS PRESSURE GAS VALVE FLAME SENSOR
2 FLASHES	FALSE FLAME DETECTED	CHECK GAS VALVE CHECK FOR SHORTS IN FLAME SENSOR WIRING

NOTE:
Fault Recall
The ignition control stores the last 5 faults in memory with the most recent fault indicated first. To retrieve the faults, depress the fault recall button for 2 seconds while in the stand-by mode. To clear the fault memory, depress fault button for 5 seconds but not more than 10 seconds.

IGNITION CONTROL DIAGNOSTIC INDICATOR CHART

Red Light Signal	Refer to Abnormal Heating or Cooling Operation Sections of this Manual
Off	Internal Control Failure
1 Flash	External Lockout
2 Flashes	Pressure Switch Stuck Open
3 Flashes	Pressure Switch Stuck Closed
4 Flashes	Thermal Protection Device Open
5 Flashes	Flame Detected with Gas Valve Closed
6 Flashes	Short Cycle Compressor Delay (Cooling Only)
7 Flashes	Limit Opened Five (5) Times Within The Same Call For Heat
8 Flashes	Indoor/Outdoor Thermostat Open (Cooling Only; Devices Not present On All Models)
9 Flashes	High Pressure/Loss of Charge Switch Open (Cooling Only; Devices Not Present On All Models)

Amber Light Signal	Refer to Abnormal Heating or Cooling Operation Sections of this Manual
Off	No Flame Present
On	Normal Flame
1 Flash	Low Flame Current
2 Flashes	Flame Detected with Gas Valve De-energized.

HEATING TIMING CHART

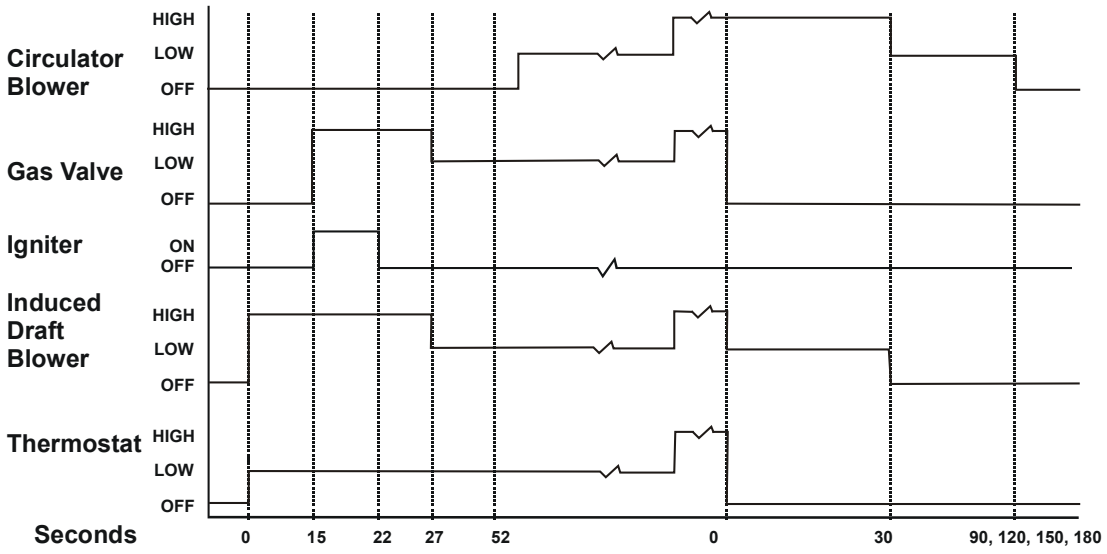

COOLING/HEAT PUMP TIMING CHART

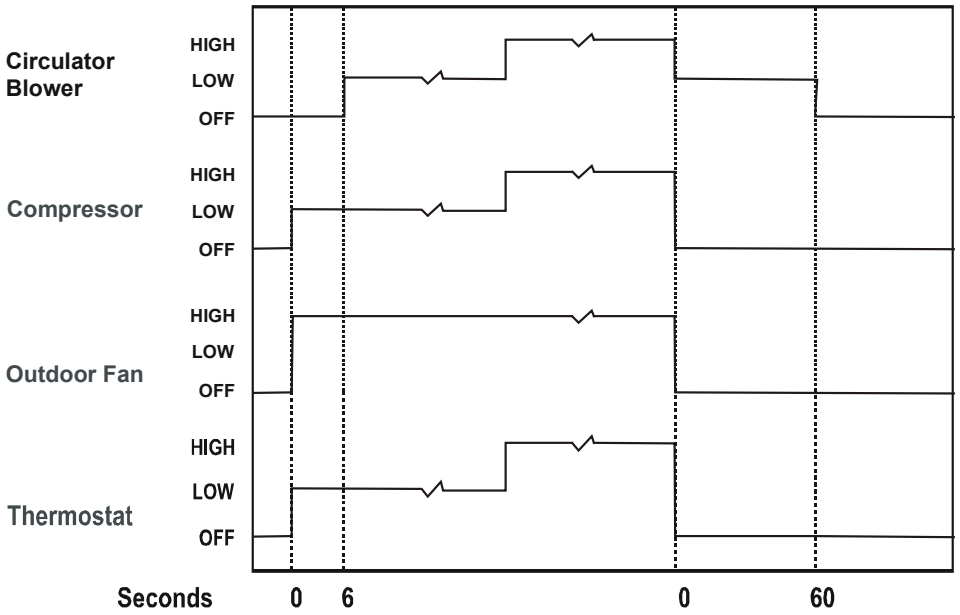

UNIT DIMENSIONS

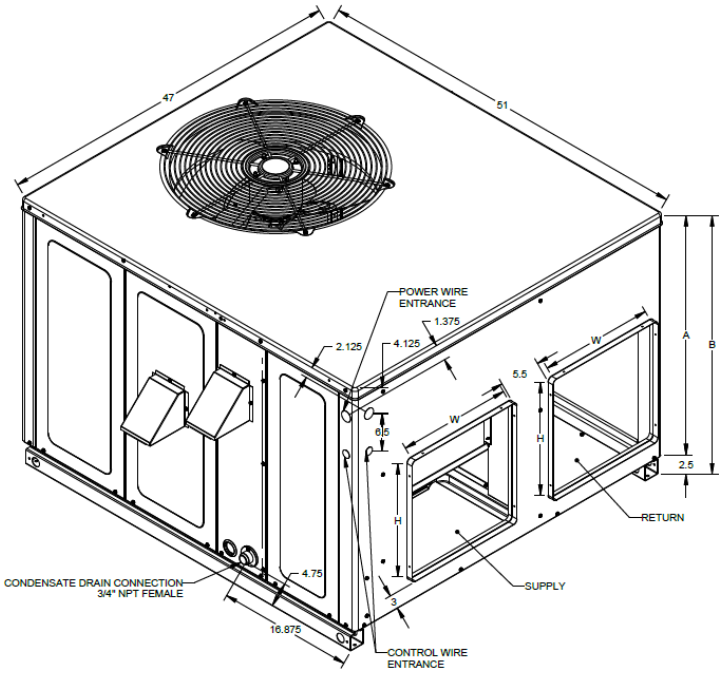

Model	Unit Dimensions (Inches)				Chassis Size
			Height		
	W	D	A	B	
A/GPD14 24-36M	47	51	32	34 1/2	Medium
A/GPD14 42-48M	47	51	40	42 1/2	Large

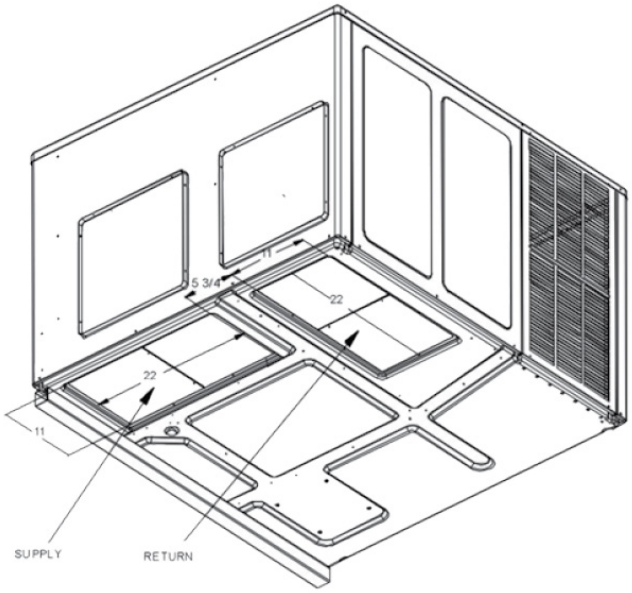

Model	Duct Openings			
	Supply		Return	
	W	H	W	H
A/GPD14 24-36M	16	16	16	16
A/GPD14 42-48M	16	18	16	18

WIRING DIAGRAM

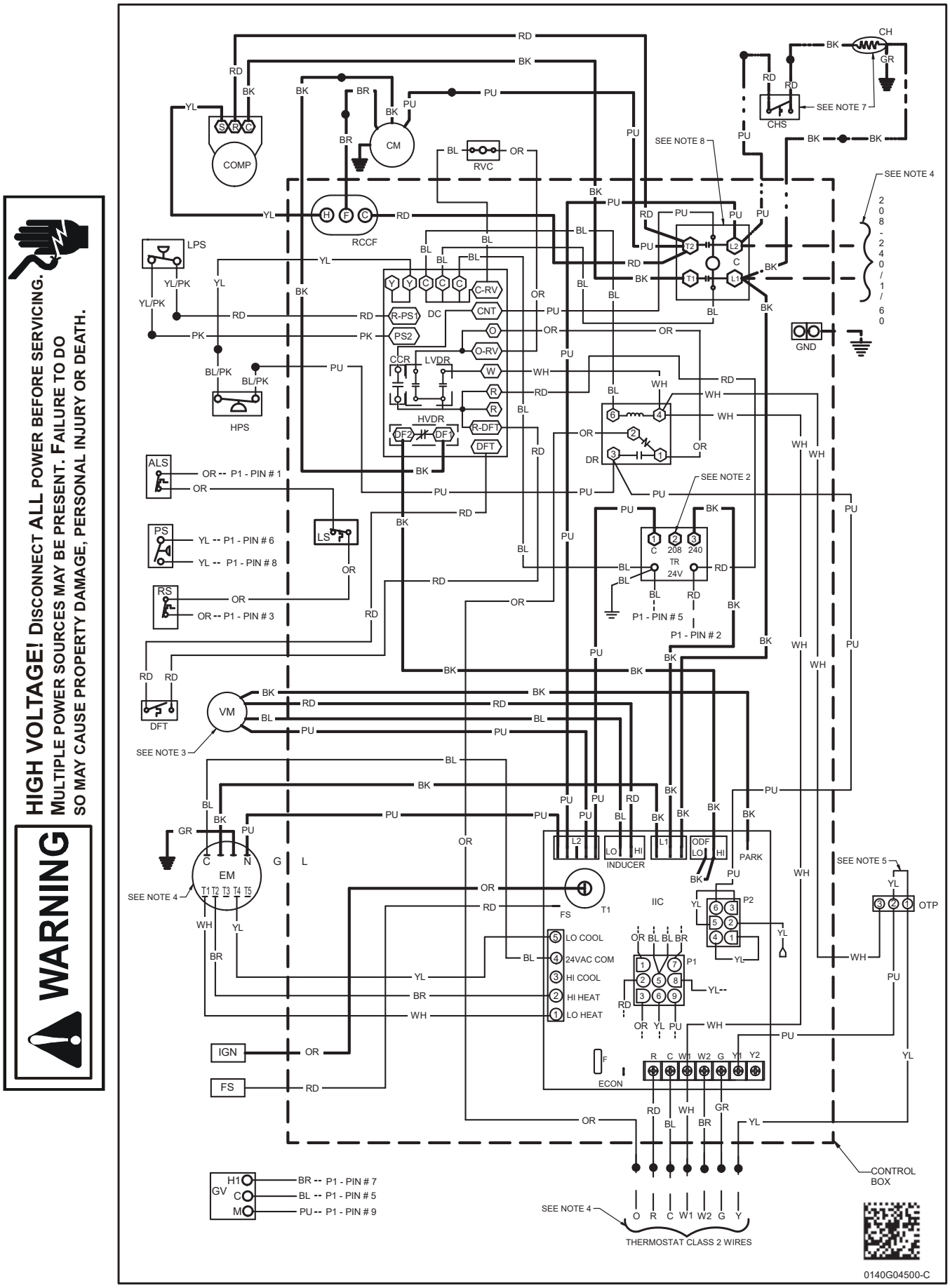

Wiring is subject to change. Always refer to the wiring diagram on the unit for the most up-to-date wiring.

WIRING DIAGRAM

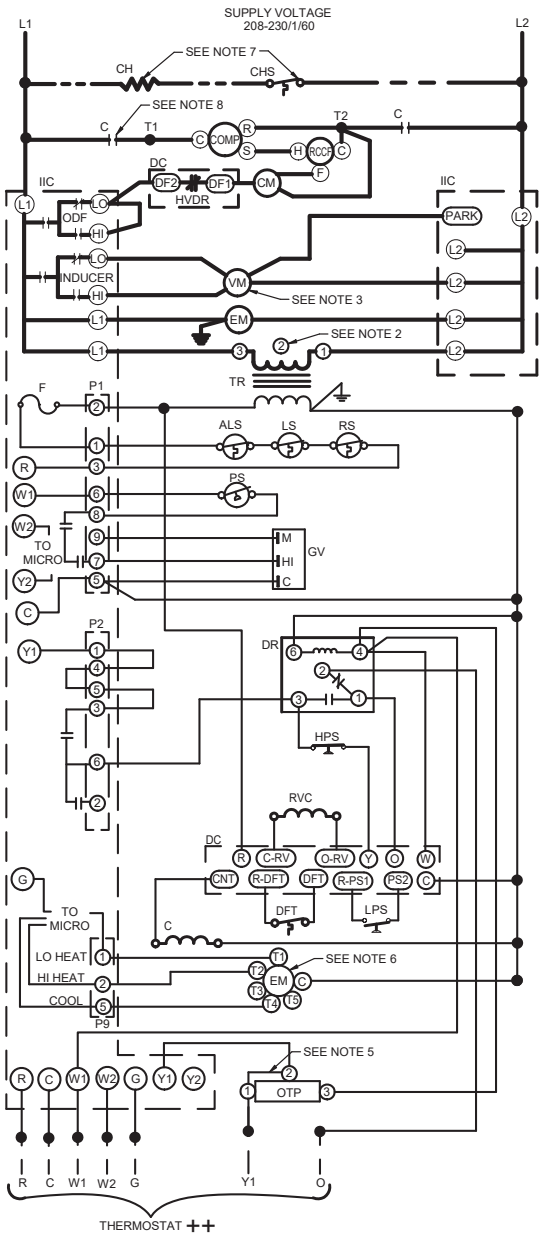

COMPONENT LEGEND

ALS	AUXILLARY LIMIT SWITCH
C	CONTACTOR
CH	CRANKCASE HEATER
CHS	CRANKCASE HEATER SWITCH
CM	CONDENSER MOTOR
COMP	COMPRESSOR
DC	DEFROST CONTROL BOARD
DFT	DEFROST THERMOSTAT
DR	DEFROST RELAY
EM	EVAPORATOR MOTOR
F	FUSE
FS	FLAME SENSOR
GND	EQUIPMENT GROUND
GV	GAS VALVE
HPS	HIGH PRESSURE SWITCH
IIC	INTEGRATED IGNITION CONTROL
IGN	IGNITOR
LPS	LOW PRESSURE SWITCH
LS	LIMIT SWITCH
OTP	OUTDOOR THERMOSTAT PLUG
P1	9 PIN CONNECTOR PLUG
P2	6 PIN CONNECTOR PLUG
PS	PRESSURE SWITCH
RCCF	RUN CAPACITOR COMPRESSOR / FAN
RS	ROLLOUT SWITCH
RVC	REVERSING VALVE COIL
TR	TRANSFORMER
VM	VENT MOTOR

FACTORY WIRING

- LINE VOLTAGE
- LOW VOLTAGE
- OPTIONAL HIGH VOLTAGE

FIELD WIRING

- HIGH VOLTAGE
- LOW VOLTAGE

WIRE CODE

BK	BLACK
BL	BLUE
BR	BROWN
GR	GREEN
OR	ORANGE
PK	PINK
PU	PURPLE
RD	RED
WH	WHITE
YL	YELLOW

NOTES

1. REPLACEMENT WIRE MUST BE THE SAME SIZE AND TYPE OF INSULATION AS ORIGINAL (AT LEAST 105°C). USE COPPER CONDUCTOR ONLY.
2. FOR 208V TRANSFORMER OPERATION MOVE BLACK WIRE FROM TERMINAL 3 TO TERMINAL 2 ON TRANSFORMER.
3. FOR 208V VENT MOTOR OPERATION, REMOVE BLUE LEAD FROM INDUCER LOW TERMINAL. MOVE BLACK LEAD FROM PARK TERMINAL TO INDUCER LOW TERMINAL, AND PLACE BLUE LEAD ON PARK.
4. USE COPPER CONDUCTORS ONLY.
   ++ USE NEC CLASS 2 WIRE.
5. FOR OUTDOOR THERMOSTAT, REMOVE PLUG FROM HARNESS AND CONNECT PLUG FROM OUTDOOR THERMOSTAT TO HARNESS.
6. TO CHANGE AIRFLOW MOVE YELLOW WIRE (COOLING / HEAT PUMP), WHITE WIRE (LOW STAGE GAS), OR BROWN WIRE (HIGH-STAGE GAS) TO SPEED TAP T1, T2, T3, T4, OR T5 AT EVAPORATOR MOTOR. REFER TO UNIT AIRFLOW TABLES FOR TO DETERMINE THE APPROPRIATE SPEED TAP FOR APPLICATION. UNITS SHIPPED WITH YELLOW, WHITE, AND BROWN ON T4, T1, AND T2 RESPECTIVELY.
7. CRANKCASE HEATER AND CRANKCASE HEATER SWITCH FACTORY EQUIPPED WHEN REQUIRED.
8. DOUBLE POLE CONTACTOR SHOWN. SINGLE POLE CONTACTOR COULD BE FACTORY EQUIPPED AS AN ALTERNATE CONFIGURATION.

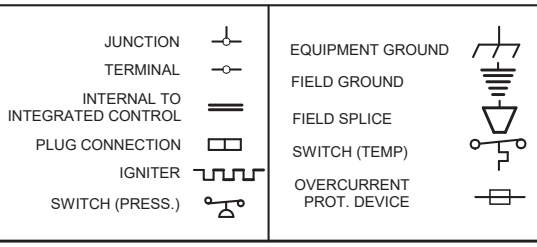

DIAGNOSTIC LED - RED	STATUS	CHECK
ON	NORMAL OPERATION	-
OFF	NO POWER OR INTERNAL CONTROL FAULT	CHECK INPUT POWER CHECK FUSE(S) REPLACE CONTROL
1 FLASH	IGNITION FAILURE	GAS FLOW GAS PRESSURE GAS VALVE FLAME SENSOR
2 FLASHES	PRESSURE SWITCH OPEN	CHECK PRESSURE SWITCH CHECK TUBING CHECK VENT MOTOR
3 FLASHES	PRESSURE SWITCH CLOSED WITHOUT INDUCER ON	CHECK PRESSURE SWITCH CHECK WIRING FOR SHORTS
4 FLASHES	OPEN LIMIT SWITCH	CHECK MAIN LIMIT SWITCH CHECK AUXILIARY LIMIT SW. CHECK ROLLOUT LIMIT SW.
5 FLASHES	FALSE FLAME DETECTED	CHECK GAS VALVE CHECK FOR SHORTS IN FLAME SENSOR WIRING
6 FLASHES	COMPR. SHORT CYCLE DELAY	3 MIN COMP. SHORT CYCLE DELAY

DIAGNOSTIC LED - RED	STATUS	CHECK
7 FLASHES	LIMIT OPEN 5 TIMES IN SAME CALL FOR HEAT	CHECK MAIN LIMIT SWITCH CHECK AUXILIARY LIMIT SW.
8 FLASHES	IDT/ODT OPEN	CHECK JUMPER BETWEEN 1 AND 4 ON 6-CIRCUIT CONNECTOR CHECK OPTIONAL REFRIGERANT SWITCHES
9 FLASHES	PSW/LOC OPEN	CHECK REFRIGERANT SWITCHES FOR LOSS OF CHARGE OR HIGH HEAD PRESSURE

DIAGNOSTIC LED - AMBER	STATUS	CHECK
OFF	NO FLAME PRESENT	-
ON	NORMAL FLAME PRESENT	-
1 FLASH	LOW FLAME SIGNAL	GAS FLOW GAS PRESSURE GAS VALVE FLAME SENSOR
2 FLASHES	FALSE FLAME DETECTED	CHECK GAS VALVE CHECK FOR SHORTS IN FLAME SENSOR WIRING

0140G04501-B

Wiring is subject to change. Always refer to the wiring diagram on the unit for the most up-to-date wiring.

MINIMUM CLEARANCES

Clearance in accordance with local installation codes, the requirements of the gas supplier and the manufacturer's installation instructions.

Dégaugement conforme aux codes d'installation locaux, aux exigences du fournisseur de gaz et aux instructions d'installation du fabricant

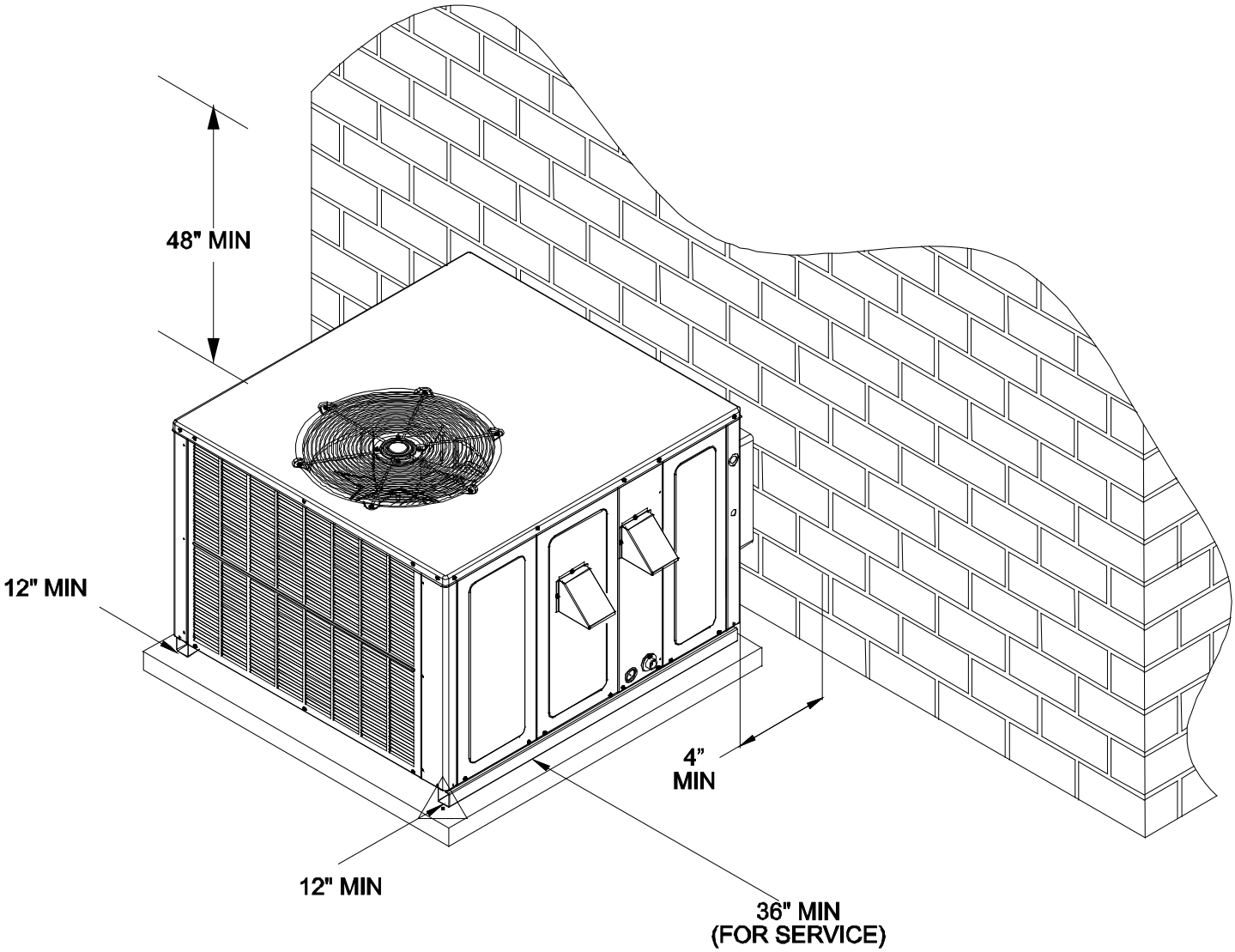

NOTE: Roof overhang should be no more than 36".

Recommended Filter Sizes

UNIT	2 Ton	2 1/2 Ton	3 Ton	3 1/2 / 4 Ton
Min. Filter Size	(1)20 x 20 x 1	(1)20 x 25 x 1	(1)25 x 25 x1	(2)20 x 20 x 1

BLOWER PERFORMANCE DATA

***PD1424060M41A* - Rise Range: 35° - 65°**

E.S.P	T1 1ST Stage Heating Speed			T2 2nd Stage Heating Speed			T3 Cooling Speed		T4 Cooling Speed		T5 Cooling Speed	
	CFM	WATTS	RISE	CFM	WATTS	RISE	CFM	WATTS	CFM	WATTS	CFM	WATTS
0.1	616	51	55	845	105	53	859	94	885	103	1048	140
0.2	581	60	58	809	116	56	810	102	836	111	999	148
0.3	535	69	63	774	124	58	761	109	788	118	950	155
0.4	476	79	X	736	134	61	713	117	740	126	901	163
0.5	422	87	X	695	140	65	664	125	692	134	852	171
0.6	365	95	X	646	148	X	615	133	643	142	803	179
0.7	334	101	X	580	161	X	---	---	---	---	---	---
0.8	300	103	X	532	167	X	---	---	---	---	---	---

***PD1424070M41B* - Rise Range: 35° - 65° F**

E.S.P	T1 1ST Stage Heating Speed			T2 2nd Stage Heating Speed			T3 Cooling Speed		T4 Cooling Speed		T5 Cooling Speed	
	CFM	WATTS	RISE	CFM	WATTS	RISE	CFM	WATTS	CFM	WATTS	CFM	WATTS
0.1	708	57	50	1004	129	52	859	94	885	103	1048	140
0.2	659	65	57	955	137	54	810	102	836	111	999	148
0.3	610	72	63	906	145	56	761	109	788	118	950	155
0.4	561	80	X	857	153	59	713	117	740	126	901	163
0.5	512	88	X	808	160	63	664	125	692	134	852	171
0.6	---	---	---	760	168	X	615	133	643	142	803	179
0.7	---	---	---	---	---	---	---	---	---	---	---	---
0.8	---	---	---	---	---	---	---	---	---	---	---	---

***PD143080M41A* - Rise Range: 35° - 65°**

E.S.P	T1 1ST Stage Heating Speed			T2 2nd Stage Heating Speed			T3 Cooling Speed		T4 Cooling Speed		T5 Cooling Speed	
	CFM	WATTS	RISE	CFM	WATTS	RISE	CFM	WATTS	CFM	WATTS	CFM	WATTS
0.1	997	147	45	1276	284	47	1059	137	1071	142	1333	234
0.2	965	155	47	1238	284	48	1008	144	1023	149	1285	242
0.3	922	165	49	1206	289	50	956	151	976	157	1237	250
0.4	886	173	51	1164	302	52	908	158	928	164	1189	257
0.5	835	182	54	1131	314	53	857	166	880	172	1141	265
0.6	781	188	58	1086	319	55	784	175	832	180	1094	273
0.7	731	200	62	1038	319	58	732	180	784	187	---	---
0.8	677	202	X	984	322	61	673	188	736	195	---	---

***PD1430090M41B* - Rise Range: 45° - 75° F**

E.S.P	T1 1ST Stage Heating Speed			T2 2nd Stage Heating Speed			T3 Cooling Speed		T4 Cooling Speed		T5 Cooling Speed	
	CFM	WATTS	RISE	CFM	WATTS	RISE	CFM	WATTS	CFM	WATTS	CFM	WATTS
0.1	1059	137	49	1260	213	55	1059	137	1071	142	1333	234
0.2	1008	143.5	52	1212	221	57	1008	143.5	1023	149	1285	242
0.3	956	151	54	1165	229	59	956	151	976	157	1237	250
0.4	908	157.5	57	1117	236	62	908	157.5	928	164	1189	257
0.5	857	165.5	60	1069	244	64	857	165.5	880	172	1141	265
0.6	784	175	63	1021	252	68	784	175	832	180	1094	273
0.7	732	180	69	973	259	70	732	180	784	187	---	---
0.8	673	187.5	72	-	-	-	673	187.5	736	195	---	---

X = Outside of Temperature Rise Range - Not Recommended.

NOTE: *The shaded area indicates ranges in excess of maximum external static pressure allowable when heating. For satisfactory operation, external static pressure should not exceed 0.5" w.c.*

BLOWER PERFORMANCE DATA

***PD1436080M41A* - Rise Range: 35° - 65°**

E.S.P	T1 1ST Stage Heating Speed			T2 2nd Stage Heating Speed			T3 Cooling Speed		T4 Cooling Speed		T5 Cooling Speed	
	CFM	WATTS	RISE	CFM	WATTS	RISE	CFM	WATTS	CFM	WATTS	CFM	WATTS
0.1	997	147	45	1276	284	47	1317	230	1317	230	1453	269
0.2	965	155	47	1238	284	48	1269	237	1269	237	1405	277
0.3	922	165	49	1206	289	50	1221	245	1221	245	1357	284
0.4	886	173	51	1164	302	52	1174	253	1174	253	1309	292
0.5	835	182	54	1131	314	53	1126	260	1126	260	1261	300
0.6	781	188	58	1086	319	55	1078	268	1078	268	1213	307
0.7	731	200	62	1038	319	58	1030	276	1030	276	---	---
0.8	677	202	X	984	322	61	982	283	982	283	---	---

***PD1436090M41B* - Rise Range: 45° - 75° F**

E.S.P	T1 1ST Stage Heating Speed			T2 2nd Stage Heating Speed			T3 Cooling Speed		T4 Cooling Speed		T5 Cooling Speed	
	CFM	WATTS	RISE	CFM	WATTS	RISE	CFM	WATTS	CFM	WATTS	CFM	WATTS
0.1	1053	143	49	1257	236	55	1136	181	1136	181	1408	304
0.2	1007	151	52	1211	243	57	1090	188	1090	188	1362	311
0.3	961	158	54	1165	250	59	1044	195	1044	195	1315	319
0.4	915	165	57	1119	258	62	997	203	997	203	1269	326
0.5	869	173	60	1073	265	64	951	210	951	210	1223	334
0.6	823	180	63	1027	273	68	905	218	905	218	1177	341
0.7	777	188	69	980	280	70	859	225	859	225	---	---
0.8	731	195	72	---	---	---	813	233	813	233	---	---

***PD1437090M41A* - Rise Range: 45° - 75° F**

E.S.P	T1 1ST Stage Heating Speed			T2 2nd Stage Heating Speed			T3 Cooling Speed		T4 Cooling Speed		T5 Cooling Speed	
	CFM	WATTS	RISE	CFM	WATTS	RISE	CFM	WATTS	CFM	WATTS	CFM	WATTS
0.1	1059	137	49	1260	213	55	1317	230	1317	230	1453	269
0.2	1008	144	52	1212	221	57	1269	237	1269	237	1405	277
0.3	956	151	54	1165	229	59	1221	245	1221	245	1357	284
0.4	908	158	57	1117	236	62	1174	253	1174	253	1309	292
0.5	857	166	60	1069	244	64	1126	260	1126	260	1261	300
0.6	784	175	63	1021	252	68	1078	268	1078	268	1213	307
0.7	732	180	69	973	259	70	1030	276	1030	276	---	---
0.8	673	188	72	-	-	-	982	283	982	283	---	---

***PD1442100M41A* - Rise Range: 35° - 65°**

E.S.P	T1 1ST Stage Heating Speed			T2 2nd Stage Heating Speed			T3 Cooling Speed		T4 Cooling Speed		T5 Cooling Speed	
	CFM	WATTS	RISE	CFM	WATTS	RISE	CFM	WATTS	CFM	WATTS	CFM	WATTS
0.1	1098	167	51	1423	324	53	1354	260	1501	320	1609	365
0.2	1038	178	54	1375	335	55	1296	267	1446	328	1556	373
0.3	991	184	57	1322	347	57	1237	275	1391	336	1504	381
0.4	932	192	60	1275	347	59	1178	283	1336	344	1451	388
0.5	871	204	65	1224	357	61	1120	291	1281	352	1399	396
0.6	811	213	X	1172	364	64	1061	299	1226	359	1347	404
0.7	753	210	X	1130	379	X	1002	306	1171	367	1294	412
0.8	704	221	X	1075	384	X	944	314	1116	375	1242	420

X = Outside of Temperature Rise Range - Not Recommended.

NOTE: *The shaded area indicates ranges in excess of maximum external static pressure allowable when heating. For satisfactory operation, external static pressure should not exceed 0.5" w.c.*

BLOWER PERFORMANCE DATA

PD1442115M41B - Rise Range: 45° - 75° F												
E.S.P	T1 1ST Stage Heating Speed			T2 2nd Stage Heating Speed			T3 Cooling Speed		T4 Cooling Speed		T5 Cooling Speed	
	CFM	WATTS	RISE	CFM	WATTS	RISE	CFM	WATTS	CFM	WATTS	CFM	WATTS
0.1	1090	150	52	1286	231	57	1354	260	1501	320	1609	365
0.2	1025	158	57	1225	239	61	1296	267	1446	328	1556	373
0.3	960	166	62	1165	247	64	1237	275	1391	336	1504	381
0.4	895	174	X	1105	255	X	1178	283	1336	344	1451	388
0.5	830	181	X	1045	262	X	1120	291	1281	352	1399	396
0.6	765	189	---	984	270	X	1061	299	1226	359	1347	404
0.7	699	197	---	924	278	---	1002	306	1171	367	1294	412
0.8	634	205	---	---	---	---	944	314	1116	375	1242	420

PD1448100M41A - Rise Range: 35° - 65°												
E.S.P	T1 1ST Stage Heating Speed			T2 2nd Stage Heating Speed			T3 Cooling Speed		T4 Cooling Speed		T5 Cooling Speed	
	CFM	WATTS	RISE	CFM	WATTS	RISE	CFM	WATTS	CFM	WATTS	CFM	WATTS
0.1	1098	167	51	1423	324	53	1164	180	1397	315	1758	427
0.2	1038	178	54	1375	335	55	1100	188	1354	320	1709	435
0.3	991	184	57	1322	347	57	1037	196	1306	329	1660	443
0.4	932	192	60	1275	347	59	974	204	1261	338	1612	450
0.5	871	204	65	1224	357	61	910	212	1211	343	1563	458
0.6	811	213	X	1172	364	64	847	220	1168	356	1514	466
0.7	753	210	X	1130	379	X	784	227	1111	373	1466	474
0.8	704	221	X	1075	384	X	720	235	1066	373	1417	482

PD1448115M41B - Rise Range: 45° - 75° F												
E.S.P	T1 1ST Stage Heating Speed			T2 2nd Stage Heating Speed			T3 Cooling Speed		T4 Cooling Speed		T5 Cooling Speed	
	CFM	WATTS	RISE	CFM	WATTS	RISE	CFM	WATTS	CFM	WATTS	CFM	WATTS
0.1	1164	180	56	1435	293	61	1164	180	1675	392	1758	427
0.2	1100	188	59	1378	301	63	1100	188	1624	400	1709	435
0.3	1037	196	62	1322	309	65	1037	196	1573	408	1660	443
0.4	974	204	65	1265	316	68	974	204	1522	416	1612	450
0.5	910	212	70	1208	324	70	910	212	1472	424	1563	458
0.6	847	220	75	1152	332	73	847	220	1421	431	1514	466
0.7	784	227	X	1095	340	X	784	227	1370	439	1466	474
0.8	720	235	X	1038	348	X	720	235	1319	447	1417	482

X = Outside of Temperature Rise Range - Not Recommended.

NOTE: *The shaded area indicates ranges in excess of maximum external static pressure allowable when heating. For satisfactory operation, external static pressure should not exceed 0.5" w.c.*

Residential Package - (Indoor Section)					
	Model Number	_____			
	Serial Number	_____			
ELECTRICAL					
Line Voltage (Measure L1 and L2 Voltage)	L1 - L2	_____			
Secondary Voltage (Measure Transformer Output Voltage)	R - C	_____			
Blower Amps		_____			
Heat Strip 1 - Amps		_____			
Heat Strip 2 - Amps		_____			
BLOWER EXTERNAL STATIC PRESSURE					
Return Air Static Pressure		_____	IN. W.C.		
Supply Air Static Pressure		_____	IN. W.C.		
Total External Static Pressure (Ignoring +/- from the reading above, add total here)		_____	IN. W.C.		
TEMPERATURES					
Return Air Temperature (Dry bulb / Wet bulb)		_____	DB °F	_____	WB °F
Cooling Supply Air Temperature (Dry bulb / Wet bulb)		_____	DB °F	_____	WB °F
Heating Supply Air Temperature		_____	DB °F		
Temperature Rise		_____	DB °F		
Delta T (Difference between Supply and Return Temperatures)		_____	DB °F		
GAS PRESSURES					
Gas Inlet Pressure		_____	IN. W.C.		
Gas Manifold Pressure (Low Fire)		_____	IN. W.C.		
Gas Manifold Pressure (High Fire)		_____	IN. W.C.		
Gas Type (NG) = Natural Gas / (LP) = Liquid Propane		_____			

Residential Package - (Outdoor Section)					
ELECTRICAL					
Supply Voltage (Measure L1 and L2 Voltage)	L1 - L2	_____			
Compressor Amps		_____			
Condenser Fan Amps		_____			
PRESSURES / TEMPERATURES					
Suction Circuit (Pressure / Suction Line Temperature)	PSIG	_____	TEMP	_____	°F
Liquid Circuit (Pressure / Liquid Temperature)	PSIG	_____	TEMP	_____	°F
Outdoor Air Temperature (Dry bulb / Wet bulb)		_____	DB °F	_____	WB °F
SUPERHEAT / SUBCOOLING	SH	_____	SC	_____	

Additional Checks	
Check wire routings for any rubbing	_____
Check product for proper draining	_____
Check for kinked pressure switch tubing.	_____
Check flue elbow for alignment and clamp tightness.	_____
Check screw tightness on blower wheel.	_____
Check factory wiring and wire connections.	_____
Check screw tightness on Outdoor Motor and Blade	_____
Check product for proper clearances as noted by installtion instructions	_____

°F to °C formula: (°F - 32) divided by 1.8 = °C **°C to °F formula: (°C multiplied by 1.8) + 32 = °F**

THIS PAGE IS INTENTIONALLY LEFT BLANK

CUSTOMER FEEDBACK

We are very interested in all product comments.
Please fill out the feedback form on one of the following links:
Goodman® Brand Products: (http://www.goodmanmfg.com/about/contact-us).
Amana® Brand Products: (http://www.amana-hac.com/about-us/contact-us).
You can also scan the QR code on the right for the product brand you purchased to be directed to the feedback page.

GOODMAN® BRAND

AMANA® BRAND

PRODUCT REGISTRATION

Thank you for your recent purchase. Though not required to get the protection of the standard warranty, registering your product is a relatively short process, and entitles you to additional warranty protection, except that failure by California and Quebec residents to register their product does not diminish their warranty rights.

For Product Registration, please register as follows:
Goodman® Brand products: (https://www.goodmanmfg.com/product-registration).
Amana® Brand products: (http://www.amana-hac.com/product-registration).
You can also scan the QR code on the right for the product brand you purchased to be directed to the Product Registration page.

GOODMAN® BRAND

AMANA® BRAND

NOTE: SPECIFICATIONS AND PERFORMANCE DATA LISTED HEREIN ARE SUBJECT TO CHANGE WITHOUT NOTICE

Quality Makes the Difference!

All of our systems are designed and manufactured with the same high quality standards regardless of size or efficiency. We have designed these units to significantly reduce the most frequent causes of product failure. They are simple to service and forgiving to operate. We use quality materials and components. Finally, every unit is run tested before it leaves the factory.

That's why we know. . .There's No Better Quality.

Visit our website at www.goodmanmfg.com or www.amana-hac.com for information on:

- Products
- Warranties
- Customer Service
- Parts
- Contractor Programs and Training
- Financing Options

© 2011-2018, 2021 Goodman Manufacturing Company, L.P.

Amana® is a registered trademark of Maytag Corporation or its related companies and is used under license. All rights reserved.