*MH95/ACSH96/AMEH96/ GCH95/GME95/GCH9
Gas-Fired Warm Air Furnace
Installation Instructions

Installer: Affix all manuals adjacent to the unit.

(Type FSP CATEGORY IV Direct or Non Direct Vent Air Furnace)

These furnaces comply with requirements embodied in the American National Standard / National Standard of Canada ANSI Z21.47·CSA-2.3 Gas Fired Central Furnaces.

RECOGNIZE THIS SYMBOL AS A SAFETY PRECAUTION.

ATTENTION INSTALLING PERSONNEL

As a professional installer you have an obligation to know the product better than the customer. This includes all safety precautions and related items.

Prior to actual installation, thoroughly familiarize yourself with this Instruction Manual. Pay special attention to all safety warnings. Often during installation or repair it is possible to place yourself in a position which is more hazardous than when the unit is in operation.

Remember, it is your responsibility to install the product safely and to know it well enough to be able to instruct a customer in its safe use.

Safety is a matter of common sense...a matter of thinking before acting. Most dealers have a list of specific good safety practices...follow them.

The precautions listed in this Installation Manual are intended as supplemental to existing practices. However, if there is a direct conflict between existing practices and the content of this manual, the precautions listed here take precedence.

NOTE: Please contact your distributor or our website for the applicable Specification Sheet referred to in this manual.

IO-299R
5/2013

Goodman Manufacturing Company, L.P.
5151 San Felipe, Suite 500, Houston, TX 77056
www.goodmanmfg.com or www.amana-hac.com
© 2006-2013 Goodman Manufacturing Company, L.P.

Table of Contents

I. Component Identification 5
II. Safety Considerations 6
Electrostatic Discharge (ESD) Precautions 7
III. Product Application 7
IV. Location Requirements & Considerations 8
General 8
Clearances and Accessibility 9
Furnace Suspension 9
Existing Furnace Removal 9
Thermostat Location 10
V. Combustion & Ventilation Air Requirements 10
VI. Installation Positions 12
VII. Horizontal Applications & Considerations 12
General 12
Drain Trap and Lines 12
Leveling 12
Alternate Vent/Flue and Combustion Air Connections 12
Alternate Electrical and Gas Line Connections 13
Drain Pan 13
Freeze Protection 13
Furnace Suspension 13
VIII. Propane Gas /High Altitude Installations 13
IX. Vent/Flue Pipe & Combustion Air Pipe 15
General 15
Dual Certification: Non-Direct/Direct Vent 15
Materials and Joining Methods 15
Proper Vent/Flue and Combustion Air Piping Practices 15
Termination Locations 16
Canadian Venting Requirements 16
Standard Furnace Connections 16
Alternate Furnace Connections 17
Non-Direct Vent (Single Pipe) Piping 18
Direct Vent (Dual Pipe) Piping 19
Vent/Intake Terminations For Installation of Multiple Direct Vent Furnaces 20
Concentric Vent Termination 20
Side Wall Vent Kit 20
X. Condensate Drain Lines & Drain Trap 20
Standard Right or Left Side Drain Hose Connections 21
Alternate Vent/Flue Drain Hose Connections 22
Upright Installations-Trap on Left Side 23
Horizontal Installations 24
XI. Electrical Connections 26
Wiring Harness 26
115 Volt Line Connections 26
Junction Box Relocation 26
24 Volt Thermostat Wiring 27
GME95/AMEH96 Furnace with 2-Stage Condenser Field Wiring 27
115 Volt Line Connection of Accessories (Electronic Air Cleaner) 27
24 Volt Humidifier 28
XII. Gas Supply and Piping 28
General 28
Gas Piping Connections 28
Propane Gas Tanks and Piping 31
XIII. Circulating Air & Filters 31
Ductwork - Air Flow 31
Checking Duct Static 32
Bottom Return Air Opening [Upflow Models] 32
Filters - Read This Section Before Installing The Return Air Ductwork 32
Upright Installations 33
Horizontal Installations 33

Table of Contents

XIV. Startup Procedure & Adjustment 33
- Heat Anticipator Setting 33
- Drain Trap Priming 33
- Furnace operation 33
- Gas Supply Pressure Measurement 34
- Gas Manifold Pressure Measurement and Adjustment 35
- Gas Input Rate Measurement (Natural Gas Only) 35
- Temperature Rise 36
- Circulator Blower Speeds 36
- Circulator Blower Fan Timing Adjustment 37
- Setting Furnace Operating Mode 37

XV. Normal Sequence of Operation 37
- Power Up 37
- Heating Mode 37
- (Mode DIP switch is set to "1 STG" position) 37
- (Mode DIP Switch is set to "2 STG" position) 38
- Cooling Mode 38
- Fan Only Mode 38

XVI. Operational Checks 38
- Burner Flame 38

XVII. Safety Circuit Description 38
- General 38
- Integrated Control Module 38
- Primary Limit 39
- Auxiliary Limit 39
- Rollout Limit 39
- Pressure Switches 39
- Flame Sensor 39

XVIII. Troubleshooting 39
- Electrostatic Discharge (ESD) Precautions 39
- Diagnostic Chart 39
- Fault Recall 39
- Resetting From Lockout 39

XIX. Maintenance 40
- Annual inspection 40
- Filters 40
- Burners 40
- Induced Draft and Circulator Blowers 40
- Condensate Trap and Drain System (Qualified Servicer Only) 40
- Flame Sensor (Qualified Servicer Only) 40
- Igniter (Qualified Servicer Only) 40
- Flue Passages (Qualified Servicer Only) 40

XX. Before Leaving an Installation 41

XXI. Repair & Replacement Parts 41

Troubleshooting Chart 42

Blower Performance Data 44

Wiring Diagram 49

Special Instructions for Products Installed in the State of Massachusetts 52

WARNING

Goodman will not be responsible for any injury or property damage arising from improper service or service procedures. If you install or perform service on this unit, you assume responsibility for any personal injury or propery damage which may result. Many jurisdictions require a license to install or service heating and air conditioning equipment.

WARNING

IF THE INFORMATION IN THESE INSTRUCTIONS IS NOT FOLLOWED EXACTLY, A FIRE OR EXPLOSION MAY RESULT CAUSING PROPERTY DAMAGE, PERSONAL INJURY OR LOSS OF LIFE.

- DO NOT STORE OR USE GASOLINE OR OTHER FLAMMABLE VAPORS AND LIQUIDS IN THE VICINITY OF THIS OR ANY OTHER APPLIANCE.
- WHAT TO DO IF YOU SMELL GAS:
  - * DO NOT TRY TO LIGHT ANY APPLIANCE.
  - * DO NOT TOUCH ANY ELECTRICAL SWITCH; DO NOT USE ANY PHONE IN YOUR BUILDING.
  - * IMMEDIATELY CALL YOUR GAS SUPPLIER FROM A NEIGHBORS PHONE. FOLLOW THE GAS SUPPLIERS INSTRUCTIONS.
  - * IF YOU CANNOT READCH YOUR GAS SUPPLIER, CALL THE FIRE DEPARTMENT.
- INSTALLATION AND SERVICE MUST BE PERFORMED BY A QUALIFIED INSTALLER, SERVICE AGENCY OR THE GAS SUPPLIER

WARNING

SHOULD OVERHEATING OCCUR OR THE GAS SUPPLY FAIL TO SHUT OFF, TURN OFF THE MANUAL GAS SHUTOFF VALVE EXTERNAL TO THE FURNACE BEFORE TURNING OFF THE ELECTRICAL SUPPLY.

DANGER
PELIGRO

CARBON MONOXIDE POISONING HAZARD

Special Warning for Installation of Furnace or Air Handling Units in Enclosed Areas such as Garages, Utility Rooms or Parking Areas

Carbon monoxide producing devices (such as an automobile, space heater, gas water heater, etc.) should not be operated in enclosed areas such as unventilated garages, utility rooms or parking areas because of the danger of carbon monoxide (CO) poisoning resulting from the exhaust emissions. If a furnace or air handler is installed in an enclosed area such as a garage, utility room or parking area and a carbon monoxide producing device is operated therein, there must be adequate, direct outside ventilation.

This ventilation is necessary to avoid the danger of CO poisoning which can occur if a carbon monoxide producing device continues to operate in the enclosed area. Carbon monoxide emissions can be (re)circulated throughout the structure if the furnace or air handler is operating in any mode.

CO can cause serious illness including permanent brain damage or death.

B10259-216

TO THE INSTALLER

Before installing this unit, please read this manual thoroughly to familiarize yourself with specific items which must be adhered to, including but not limited to: unit maximum external static pressure, gas pressures, BTU input rating, proper electrical connections, circulating air temperature rise, minimum or maximum CFM, and motor speed connections.

SHIPPING INSPECTION

All units are securely packed in shipping containers tested according to International Safe Transit Association specifications. The carton must be checked upon arrival for external damage. If damage is found, a request for inspection by carrier's agent must be made in writing immediately. The furnace must be carefully inspected on arrival for damage and bolts or screws which may have come loose in transit. In the event of damage the consignee should:

1. Make a notation on delivery receipt of any visible damage to shipment or container.
2. Notify carrier promptly and request an inspection.
3. With concealed damage, carrier must be notified as soon as possible - preferably within five days.
4. File the claim with the following support documents within a nine month statute of limitations.

- Original or certified copy of the Bill of Lading, or indemnity bond.
- Original paid freight bill or indemnity in lieu thereof.
- Original or certified copy of the invoice, showing trade and other discounts or reductions.
- Copy of the inspection report issued by carrier's representative at the time damage is reported to carrier.

The carrier is responsible for making prompt inspection of damage and for a thorough investigation of each claim. The distributor or manufacturer will not accept claims from dealers for transportation damage.

Keep this literature in a safe place for future reference.

I. COMPONENT IDENTIFICATION

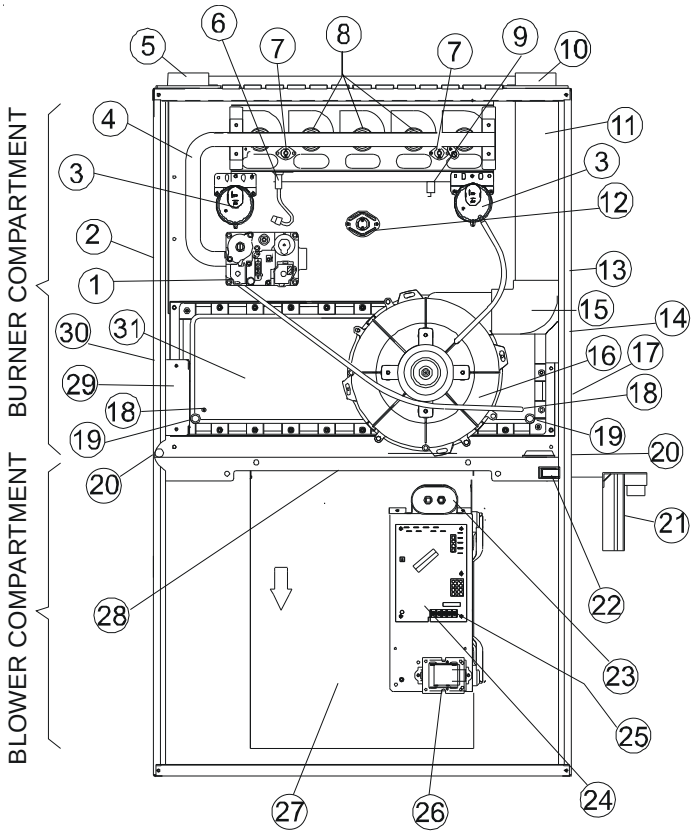

Upflow/Horizontal

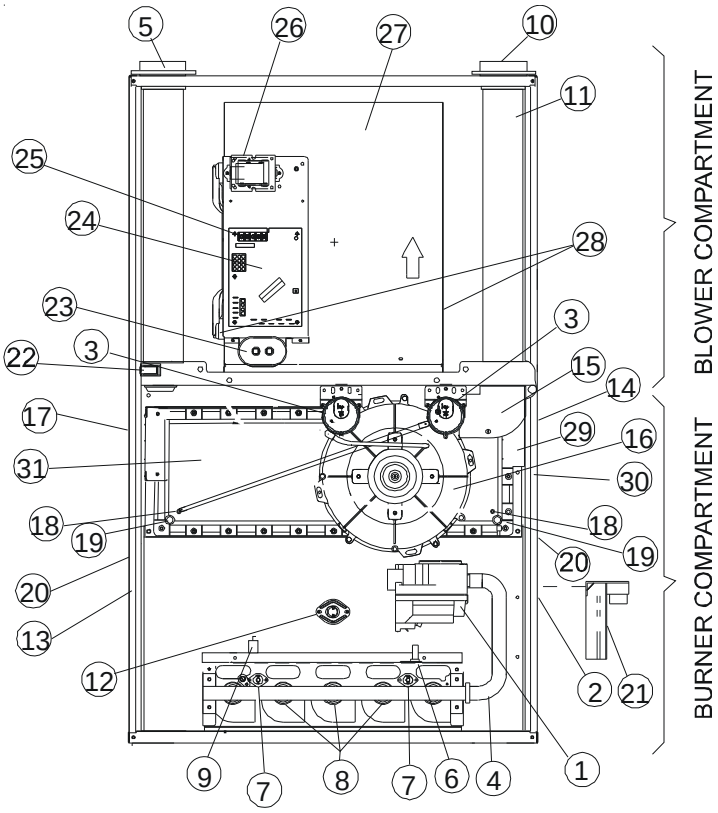

Counterflow/Horizontal

1 Gas Valve
2 Gas Line Entrance (Alternate)
3 Pressure Switch
4 Gas Manifold
5 Combustion Air Intake Connection / “Coupling”
6 Hot Surface Igniter
7 Rollout Limit
8 Burners
9 Flame Sensor
10 Flue Pipe Connection / “Coupling”
11 Flue Pipe (Internal)
12 Primary Limit
13 Gas Line Entrance
14 Flue Pipe Connection (Alternate)
15 Rubber Elbow
16 Induced Draft Blower
17 Electrical Connection Inlets (Alternate)
18 Coil Front Cover Pressure Tap
19 Coil Front Cover Drain Port
20 Drain Line Penetrations
21 Drain Trap
22 Blower Door Interlock Switch
23 Capacitor
24 Integrated Control Module (with fuse and diagnostic LED)
25 24-Volt Thermostat Connections
26 Transformer (40 VA)
27 Circulator Blower
28 Auxiliary Limit
29 Junction Box
30 Electrical Connection Inlets
31 Coil Front Cover

II. SAFETY CONSIDERATIONS

Adhere to the following warnings and cautions when installing, adjusting, altering, servicing, or operating the furnace. To ensure proper installation and operation, thoroughly read this manual for specifics pertaining to the installation and application of this product.

This furnace is manufactured for use with natural gas. It may be field converted to operate on L.P. gas by using the appropriate L.P. conversion kit listed in the **PROPANE GAS/HIGH ALTITUDE INSTALLATIONS section** of this manual

Install this furnace only in a location and position as specified in **LOCATION REQUIREMENTS & CONSIDERATIONS section and INSTALLATION POSITIONS section** of this manual.

Provide adequate combustion and ventilation air to the furnace as specified in **COMBUSTION & VENTILATION AIR REQUIREMENTS section of this manual.**

Combustion products must be discharged to the outdoors. Connect this furnace to an approved vent system only, as specified in **VENT/FLUE PIPE & COMBUSTION AIR PIPE** section of this manual.

Never test for gas leaks with an open flame. Use a commercially available soap solution made specifically for the detection of leaks to check all connections, as specified in **GAS SUPPLY AND PIPING** section of this manual.

Always install a furnace to operate within the furnace's intended temperature-rise range with a duct system which has external static pressure within the allowable range, as specified on the furnace rating plate and **OPERATIONAL CHECKS section** of these instructions.

When a furnace is installed so that supply ducts carry air circulated by the furnace to areas outside the space containing the furnace, the return air shall also be handled by duct(s) sealed to the furnace casing and terminating outside the space containing the furnace.

A gas-fired furnace for installation in a residential garage must be installed as specified in the **LOCATION REQUIREMENTS AND CONSIDERATIONS section** of this manual.

This furnace may be used as a construction site heater only if certain conditions are met. These conditions are listed in the **PRODUCT APPLICATION section** of this manual.

WARNING

TO PREVENT PERSONAL INJURY OR DEATH DUE TO IMPROPER INSTALLATION, ADJUSTMENT, ALTERATION, SERVICE OR MAINTENANCE, REFER TO THIS MANUAL. FOR ADDITIONAL ASSISTANCE OR INFORMATION, CONSULT A QUALIFIED INSTALLER, SERVICER AGENCY OR THE GAS SUPPLIER.

WARNING

IF THE INFORMATION IN THESE INSTRUCTIONS IS NOT FOLLOWED EXACTLY, A FIRE OR EXPLOSION MAY RESULT CAUSING PROPERTY DAMAGE, PERSONAL INJURY OR LOSS OF LIFE.

- DO NOT STORE OR USE GASOLINE OR OTHER FLAMMABLE VAPORS AND LIQUIDS IN THE VICINITY OF THIS OR ANY OTHER APPLIANCE.
- **WHAT TO DO IF YOU SMELL GAS:**
  - DO NOT TRY TO LIGHT ANY APPLIANCE.
  - DO NOT TOUCH ANY ELECTRICAL SWITCH; DO NOT USE ANY PHONE IN YOUR BUILDING.
  - IMMEDIATELY CALL YOUR GAS SUPPLIER FROM A NEIGHBOR'S PHONE. FOLLOW THE GAS SUPPLIER'S INSTRUCTIONS.
  - IF YOU CANNOT REACH YOUR GAS SUPPLIER, CALL THE FIRE DEPARTMENT.
- INSTALLATION AND SERVICE MUST BE PERFORMED BY A QUALIFIED INSTALLER, SERVICE AGENCY OR THE GAS SUPPLIER.

WARNING

THIS PRODUCT CONTAINS OR PRODUCES A CHEMICAL OR CHEMICALS WHICH MAY CAUSE SERIOUS ILLNESS OR DEATH AND WHICH ARE KNOWN TO THE STATE OF CALIFORNIA TO CAUSE CANCER, BIRTH DEFECTS OR OTHER REPRODUCTIVE HARM.

WARNING

HEATING UNIT SHOULD NOT BE UTILIZED WITHOUT REASONABLE, ROUTINE, INSPECTION, MAINTENANCE AND SUPERVISION. IF THE BUILDING IN WHICH ANY SUCH DEVICE IS LOCATED WILL BE VACANT, CARE SHOULD BE TAKEN THAT SUCH DEVICE IS ROUTINELY INSPECTED, MAINTAINED AND MONITORED. IN THE EVENT THAT THE BUILDING MAYBE EXPOSED TO FREEZING TEMPERATURES AND WILL BE VACANT, ALL WATER-BEARING PIPES SHOULD BE DRAINED, THE BUILDING SHOULD BE PROPERLY WINTERIZED, AND THE WATER SOURCE CLOSED. IN THE EVENT THAT THE BUILDING MAY BE EXPOSED TO FREEZING TEMPERATURES AND WILL BE VACANT, ANY HYDRONIC COIL UNITS SHOULD BE DRAINED AS WELL AND, IN SUCH CASE, ALTERNATIVE HEAT SOURCES SHOULD BE UTILIZED.

WARNING

TO PREVENT POSSIBLE PROPERTY DAMAGE, PERSONAL INJURY OR DEATH DUE TO ELECTRICAL SHOCK, THE FURNACE MUST BE LOCATED TO PROTECT THE ELECTRICAL COMPONENTS FROM WATER.

DANGER
PELIGRO

CARBON MONOXIDE POISONING HAZARD

Special Warning for Installation of Furnace or Air Handling Units in Enclosed Areas such as Garages, Utility Rooms or Parking Areas

Carbon monoxide producing devices (such as an automobile, space heater, gas water heater, etc.) should not be operated in enclosed areas such as unventilated garages, utility rooms or parking areas because of the danger of carbon monoxide (CO) poisoning resulting from the exhaust emissions. If a furnace or air handler is installed in an enclosed area such as a garage, utility room or parking area and a carbon monoxide producing device is operated therein, there must be adequate, direct outside ventilation.

This ventilation is necessary to avoid the danger of CO poisoning which can occur if a carbon monoxide producing device continues to operate in the enclosed area. Carbon monoxide emissions can be (re)circulated throughout the structure if the furnace or air handler is operating in any mode.

CO can cause serious illness including permanent brain damage or death.

B10259-216

WARNING

SHOULD OVERHEATING OCCUR OR THE GAS SUPPLY FAIL TO SHUT OFF, TURN OFF THE MANUAL GAS SHUTOFF VALVE EXTERNAL TO THE FURNACE BEFORE TURNING OFF THE ELECTRICAL SUPPLY.

WARNING

POSSIBLE PROPERTY DAMAGE, PERSONAL INJURY OR DEATH DUE TO FIRE, EXPLOSION, SMOKE, SOOT, CONDENSATION, ELECTRICAL SHOCK OR CARBON MONOXIDE MAY RESULT FROM IMPROPER INSTALLATION, REPAIR OPERATION, OR MAINTENANCE OF THIS PRODUCT.

ELECTROSTATIC DISCHARGE (ESD) PRECAUTIONS

NOTE: Discharge static electricity accumulated in the body before touching the unit. An electrostatic discharge can adversely affect electrical components.

Use the following precautions during furnace installation and servicing to protect the integrated control module from damage. By putting the furnace, the control, and the person at the same electrostatic potential, these steps will help avoid exposing the integrated control module to electrostatic discharge. This procedure is applicable to both installed and non-installed (ungrounded) furnaces.

1. Disconnect all power to the furnace. Do not touch the integrated control module or any wire connected to the control prior to discharging your body's electrostatic charge to ground.
2. Firmly touch a clean, unpainted, metal surface of the furnaces near the control. Any tools held in a person's hand during grounding will be discharged.
3. Service integrated control module or connecting wiring following the discharge process in step 2. Use caution not to recharge your body with static electricity; (i.e., do not move or shuffle your feet, do not touch ungrounded objects, etc.). If you come in contact with an ungrounded object, repeat step 2 before touching control or wires.
4. Discharge your body to ground before removing a new control from its container. Follow steps 1 through 3 if installing the control on a furnace. Return any old or new controls to their containers before touching any ungrounded object.

III. PRODUCT APPLICATION

This furnace is primarily designed for residential home-heating applications. It is NOT designed or certified for use in mobile homes, trailers or recreational vehicles. This unit is NOT designed or certified for outdoor applications. The furnace **must** be installed indoors (i.e., attic space, crawl space, or garage area provided the garage area is enclosed with an operating door).

This furnace can be used in the following non-industrial commercial applications:

Schools, Office buildings, Churches, Retail stores

Nursing homes, Hotels/motels, Common or office areas

In such applications , the furnace must be installed with the following stipulations:

- It must be installed per the installation instructions provided and per local and national codes.
- It must be installed indoors in a building constructed on site.
- It must be part of a ducted system and not used in a free air delivery application.
- It must not be used as a "make-up" air unit.
- It must be installed with two-pipe systems for combustion air, especially if VOC's or other contaminants are present in the conditioned space.
- All other warranty exclusions and restrictions apply This furnace is an ETL dual-certified appliance and is appropriate for use with natural or propane gas (**NOTE:** If using propane, a propane conversion kit is required).

Dual certification means that the combustion air inlet pipe is optional and the furnace can be vented as a:

Non-direct vent (single pipe) central forced air furnace in which combustion air is taken from the installation area or from air ducted from the outside or,

Direct vent (dual pipe) central forced air furnace in which all combustion air supplied directly to the furnace burners through a special air intake system outlined in these instructions.

This furnace may be used as a construction site heater **ONLY** if the following conditions are met:

- The vent system is permanently installed per these installation instructions.
- A room thermostat is used to control the furnace. Fixed jumpers that provide continuous heating CANNOT be used.
- Return air ducts are provided and sealed to the furnace.
- A return air temperature range between 60ºF (16ºC) and 80ºF (27ºC) is maintained.
- Air filters are installed in the system and maintained during construction, replaced as appropriate during construction, and upon completion of construction are replaced.
- The input rate and temperature rise are set per the furnace rating plate.
- 100% outside air is provided for combustion air requirements during construction. Temporary ducting can be used.

  NOTE: Do not connect the temporary duct directly to the furnace. The duct must be sized according to the instructions under *Section V, Combustion and Ventilation Air Requirements, Section 5.3.3.*
- The furnace heat exchanger, components, duct system, air filters and evaporator coils are thoroughly cleaned following final construction clean up.
- All furnace operating conditions (including ignition, input rate, temperature rise and venting) are verified according to these installation instructions.

NOTE: The Commonwealth of Massachusetts requires that the following additional requirements must also be met:

- Gas furnaces must be installed by a licensed plumber or gas fitter.
- A T-handle gas cock must be used.
- If the unit is to be installed in an attic, the passageway to and the service area around the unit must have flooring.

To ensure proper installation and operation, thoroughly read this manual for specifics pertaining to the installation and application of this product.

WARNING

POSSIBLE PROPERTY DAMAGE, PERSONAL INJURY OR DEATH DUE TO FIRE, EXPLOSION, SMOKE, SOOT, CONDENSATION, ELECTRICAL SHOCK OR CARBON MONOXIDE MAY RESULT FROM IMPROPER INSTALLATION, REPAIR, OPERATION, OR MAINTENANCE OF THIS PRODUCT.

WARNING

TO PREVENT PERSONAL INJURY, PROPERTY DAMAGE OR DEATH DUE TO FIRE, DO NOT INSTALL THIS FURNACE IN A MOBILE HOME, TRAILER OR RECREATIONAL VEHICLE.

To ensure proper furnace operation, install, operate and maintain the furnace in accordance with these installation and operation instructions, all local building codes and ordinances. In their absence, follow the latest edition of the National Fuel Gas Code (NFPA 54/ANSI Z223.1), and/or CAN/CSA B149.1-05.1-05 Installation Codes, local plumbing or waste water codes, and other applicable codes.

A copy of the National Fuel Gas Code (NFPA 54/ANSI Z223.1) can be obtained from any of the following:

American National Standards Institute
1430 Broadway
New York, NY 10018

National Fire Protection Association
1 Batterymarch Park
Quincy, MA 02269

CSA International
8501 East Pleasant Valley
Cleveland, OH 44131

A copy of the CAN/CSA B149.1-05.1-05 Installation Codes can also be obtained from:

CSA International
178 Rexdale Boulevard
Etobicoke, Ontario, Canada M9W 1R3

The rated heating capacity of the furnace should be greater than or equal to the total heat loss of the area to be heated. The total heat loss should be calculated by an approved method or in accordance with “ASHRAE Guide” or “Manual J-Load Calculations” published by the Air Conditioning Contractors of America.

IV. LOCATION REQUIREMENTS & CONSIDERATIONS

GENERAL

WARNING

TO PREVENT POSSIBLE EQUIPMENT DAMAGE, PROPERTY DAMAGE, PERSONAL INJURY OR DEATH, THE FOLLOWING BULLET POINTS MUST BE OBSERVED WHEN INSTALLING THE UNIT.

Follow the instructions listed below when selecting a furnace location. Refer also to the guidelines provided in *Combustion and Ventilation Air Requirements.*

- Centrally locate the furnace with respect to the proposed or existing air distribution system.
- Ensure the temperature of the return air entering the furnace is between 55°F and 100°F when the furnace is heating.
- Provide provisions for venting combustion products outdoors through a proper venting system. Special consideration should be given to vent/flue pipe routing and combustion air intake pipe when applicable. Refer to *Vent/Flue Pipe and Combustion Air Pipe -Termination Locations* for appropriate termination locations and to determine if the piping system from furnace to termination can be accomplished within the guidelines given. **NOTE:** The length of flue and/or combustion air piping can be a limiting factor in the location of the furnace.
- Locate the furnace so condensate flows downwards to the drain. Do not locate the furnace or its condensate drainage system in any area subject to below freezing temperatures without proper freeze protection. Refer to *Condensate Drain Lines and Trap* for further details.
- Ensure adequate combustion air is available for the furnace. Improper or insufficient combustion air can expose building occupants to gas combustion products that could include carbon monoxide. Refer to *Combustion and Ventilation Air Requirements.*
- Set the furnace on a level floor to enable proper condensate drainage. If the floor becomes wet or damp at times, place the furnace above the floor on a concrete base sized approximately 1-1/2" larger than the base of the furnace. Refer to the *Horizontal Applications and Considerations* for leveling of horizontal furnaces.
- Ensure upflow or horizontal furnaces are not installed directly on carpeting, or any other combustible material. The only combustible material allowed is wood.
- A special accessory subbase must be used for upright counterflow unit installations over any combustible material (including wood). Refer to subbase instructions for installation details. (NOTE: A subbase will not be required if an air conditioning coil is located beneath the furnace between the supply air opening and the combustible floor.
- Exposure to contaminated combustion air will result in safety and performance-related problems. Do not install the furnace where the combustion air is exposed to the following substances:
  - chlorinated waxes or cleaners
  - chlorine-based swimming pool chemicals
  - water softening chemicals
  - deicing salts or chemicals
  - carbon tetrachloride
  - halogen type refrigerants
  - cleaning solutions (such as perchloroethylene)
  - printing inks
  - paint removers
  - varnishes
  - hydrochloric acid
  - cements and glues
  - antistatic fabric softeners for clothes dryers
  - and masonry acid washing materials

*NOTE: Please contact your distributor or our website for the applicable Specification Sheet referred to in this manual.

- Seal off a *non-direct vent* furnace if it is installed near an area frequently contaminated by any of the above substances. This protects the *non-direct vent* furnace from airborne contaminants. To ensure that the enclosed *non-direct vent* furnace has an adequate supply of combustion air, vent from a nearby uncontaminated room or from outdoors. Refer to the *Combustion and Ventilation Air Requirements* for details.
- If the furnace is used in connection with a cooling unit, install the furnace upstream or in parallel with the cooling unit. Premature heat exchanger failure will result if the cooling unit is placed ahead of the furnace.

  For vertical (upflow or downflow) applications, the minimum cooling coil width shall not be less than furnace width minus 1". Additionally, a coil installed above an upflow furnace or under a counterflow furnace may be the same width as the furnace or may be one size larger than the furnace. *Example: a "C" width coil may be installed with a "B" width furnace.*

  For upflow applications, the front of the coil and furnace must face the same direction.
- If the furnace is installed in a residential garage, position the furnace so that the burners and ignition source are located not less than 18 inches (457 mm) above the floor. Protect the furnace from physical damage by vehicles.
- If the furnace is installed horizontally, the furnace access doors must be vertical so that the burners fire horizontally into the heat exchanger. Do not install the unit with the access doors on the "up/top" or "down/bottom" side of the furnace.

Clearances and Accessibility

Installations must adhere to the clearances to combustible materials to which this furnace has been design certified. The minimum clearance information for this furnace is provided on the unit's clearance label. These clearances must be permanently maintained. Clearances must also accommodate an installation's gas, electrical, and drain trap and drain line connections. If the alternate vent/flue connection is used, additional clearance must be provided to accommodate these connections. Refer to *Vent Flue Pipe and Combustion Air Pipe* for details. **NOTE:** In addition to the required clearances to combustible materials, a minimum of 24 inches service clearance must be available in front of the unit.

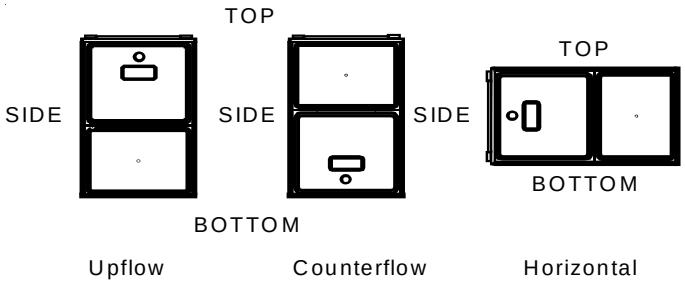

A furnace installed in a confined space (i.e., a closet or utility room) must have two ventilation openings with a total minimum free area of 0.25 square inches per 1,000 BTU/hr of furnace input rating. Refer to the Specification Sheet applicable to your model for minimum clearances to combustible surfaces. One of the ventilation openings must be within 12 inches of the top; the other opening must be within 12 inches of the bottom of the confined space. In a typical construction, the clearance between the door and door frame is usually adequate to satisfy this ventilation requirement.

Furnace Suspension

If suspending the furnace from rafters or joists, use 3/8" threaded rod and 2"x2"x1/8" angle iron as shown below. The length of rod will depend on the application and the clearances necessary.

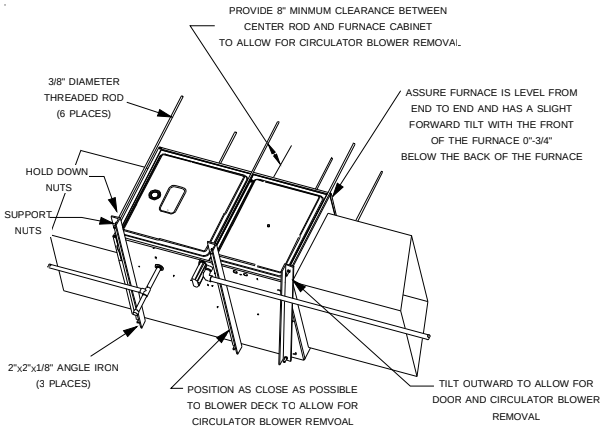

Suspended Furnace

Existing Furnace Removal

NOTE: When an existing furnace is removed from a venting system serving other appliances, the venting system may be too large to properly vent the remaining attached appliances.

The following vent testing procedure is reproduced from the **American National Standard/National Standard of Canada for Gas-Fired Central Furnaces ANSI Z21.47-Latest Edition, CSA-2.3b--Latest Edition Section 1.23.1.**

The following steps shall be followed with each appliance connected to the venting system placed in operation, while any other appliances connected to the venting system are not in operation:

a. Seal any unused openings in the venting system;

b. Inspect the venting system for proper size and horizontal pitch, as required by the National Fuel Gas Code, ANSI Z223.1 or the CSA B149.1-05.1-05 Installation Codes and these instructions. Determine that there is no blockage or restriction, leakage, corrosion and other deficiencies which could cause an unsafe condition;

c. In so far as practical, close all building doors and windows and all doors between the space in which the appliance(s) connected to the venting system are located and other spaces of the building. Turn on clothes dryers and any appliance not connected to the venting system. Turn on any exhaust fans, such as range hoods and bathroom exhausts, so they shall operate at maximum speed. Do not operate a summer exhaust fan. Close fireplace dampers;

d. Follow the lighting instructions. Place the appliance being inspected in operation. Adjust thermostat so appliance shall operate continuously;

e. Test for draft hood equipped spillage at the draft hood relief opening after 5 minutes of main burner operation. Use the flame of a match or candle;

f. After it has been determined that each appliance connected to the venting system properly vents when tested as outlined above, return doors, windows, exhaust fans, fireplace dampers and any other gas burning appliance to their previous conditions of use;

g. If improper venting is observed during any of the above tests, the common venting system must be corrected.

Corrections must be in accordance with the latest edition of the National Fuel Gas Code NFPA 54/ANSI Z223.1 and/or CSA B149.1-05.1-05 Installation Codes.

If resizing is required on any portion of the venting system, use the appropriate table in Appendix G in the latest edition of the National Fuel Gas Code ANSI Z223.1 and/or CSA B149.1-05.1-05 Installation Codes.

Thermostat Location

The thermostat should be placed approximately five feet from the floor on a vibration-free, inside wall in an area having good air circulation. Do not install the thermostat where it may be influenced by any of the following:

- Drafts, or dead spots behind doors, in corners, or under cabinets.
- Hot or cold air from registers.
- Radiant heat from the sun.
- Light fixtures or other appliances.
- Radiant heat from a fireplace.
- Concealed hot or cold water pipes, or chimneys.
- Unconditioned areas behind the thermostat, such as an outside wall.

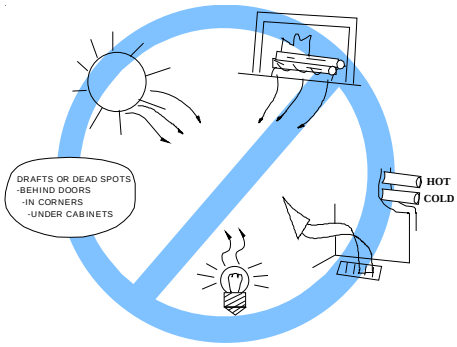

Thermostat Influences

Consult the instructions packaged with the thermostat for mounting instructions and further precautions.

V. COMBUSTION & VENTILATION AIR REQUIREMENTS

WARNING

POSSIBLE PROPERTY DAMAGE PERSONAL INJURY OR DEATH MAY OCCUR IF THE FURNACE IS NOT PROVIDED WITH ENOUGH FRESH AIR FOR PROPER COMBUSTION AND VENTILATION OF FLUE GASES. MOST HOMES REQUIRE OUTSIDE AIR BE SUPPLIED TO THE FURNACE AREA.

Improved construction and additional insulation in buildings have reduced heat loss by reducing air infiltration and escape around doors and windows. These changes have helped in reducing heating/cooling costs but have created a problem supplying combustion and ventilation air for gas fired and other fuel burning appliances. Appliances that pull air out of the house (clothes dryers, exhaust fans, fireplaces, etc.) increase the problem by starving appliances for air.

House depressurization can cause back drafting or improper combustion of gas-fired appliances, thereby exposing building occupants to gas combustion products that could include carbon monoxide.

If this furnace is to be installed in the same space with other gas appliances, such as a water heater, ensure there is an adequate supply of combustion and ventilation air for the other appliances. Refer to the latest edition of the National Fuel Gas Code NFPA 54/ANSI Z223.1 (Section 5.3), or CSA B149.1-05 Installation Codes (Sections 7.2, 7.3, or 7.4), or applicable provisions of the local building codes for determining the combustion air requirements for the appliances.

Most homes will require outside air be supplied to the furnace area by means of ventilation grilles or ducts connecting directly to the outdoors or spaces open to the outdoors such as attics or crawl spaces.

The following information on air for combustion and ventilation is reproduced from the **National Fuel Gas Code NFPA 54/ANSI Z223.1 Section 5.3.**

5.3.1 General:

(a) The provisions of 5.3 apply to gas utilization equipment installed in buildings and which require air for combustion, ventilation and dilution of flue gases from within the building. They do not apply to (1) direct vent equipment which is constructed and installed so that all air for combustion is obtained from the outside atmosphere and all flue gases are discharged to the outside atmosphere, or (2) enclosed furnaces which incorporate an integral total enclosure and use only outside air for combustion and dilution of flue gases.

(b) Equipment shall be installed in a location in which the facilities for ventilation permit satisfactory combustion of gas, proper venting and the maintenance of ambient temperature at safe limits under normal conditions of use. Equipment shall be located so as not to interfere with proper circulation of air. When normal infiltration does not provide the necessary air, outside air shall be introduced.

(c) In addition to air needed for combustion, process air shall be provided as required for: cooling of equipment or material, controlling dew point, heating, drying, oxidation or dilution, safety exhaust, odor control, and air for compressors.

(d) In addition to air needed for combustion, air shall be supplied for ventilation, including all air required for comfort and proper working conditions for personnel.

(e) While all forms of building construction cannot be covered in detail, air for combustion, ventilation and dilution of flue gases for gas utilization equipment vented by natural draft normally may be obtained by application of one of the methods covered in 5.3.3 and 5.3.4.

(f) Air requirements for the operation of exhaust fans, kitchen ventilation systems, clothes dryers, and fireplaces shall be considered in determining the adequacy of a space to provide combustion air requirements.

5.3.2 Equipment Located in Unconfined Spaces:

In unconfined spaces (see definition below) in buildings, infiltration may be adequate to provide air for combustion ventilation and dilution of flue gases. However, in buildings of tight construction (for example, weather stripping, heavily insulated, caulked, vapor barrier, etc.), additional air may need to be provided using the methods described in 5.3.3-b or 5.3.4.

Space, Unconfined.

For purposes of this Code, a space whose volume is not less than 50 cubic feet per 1,000 BTU per hour of the aggregate input rating of all appliances installed in that space. Rooms communicating directly with the space in which the appliances are installed through openings not furnished with doors, are considered a part of the unconfined space.

5.3.3 Equipment Located in Confined Spaces:

(a) *All Air from Inside the Building:* The confined space shall be provided with two permanent openings communicating directly with an additional room(s) of sufficient volume so that the combined volume of all spaces meets the criteria for an unconfined space. The total input of all gas utilization equipment installed in the combined space shall be considered in making this determination. Each opening shall have a minimum free area of 1 square inch per 1,000 BTU per hour of the total input rating of all gas utilization equipment in the confined space, but not less than 100 square inches. One opening shall be within 12 inches of the top and one within 12 inches of the bottom of the enclosure.

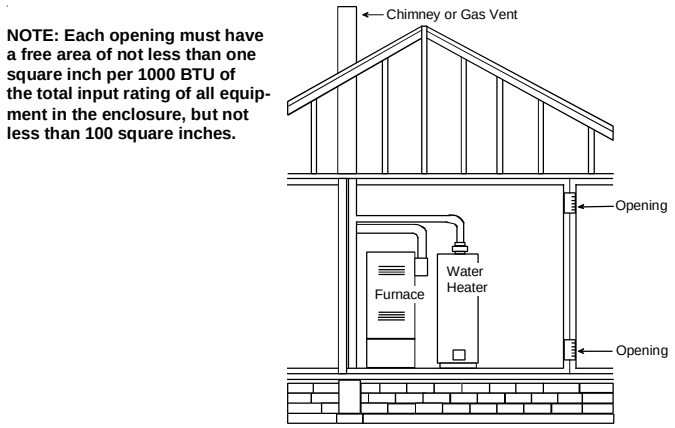

Equipment Located in Confined Spaces; All Air from Inside Building. See 5.3.3-a.

(b) *All Air from Outdoors:* The confined space shall be provided with two permanent openings, one commencing within 12 inches of the top and one commencing within 12 inches of the bottom of the enclosure. The openings shall communicate directly, or by ducts, with the outdoors or spaces (crawl or attic) that freely communicate with the outdoors.

1. When directly communicating with the outdoors, each opening shall have a minimum free area of 1 square inch per 4,000 BTU per hour of total input rating of all equipment in the enclosure.

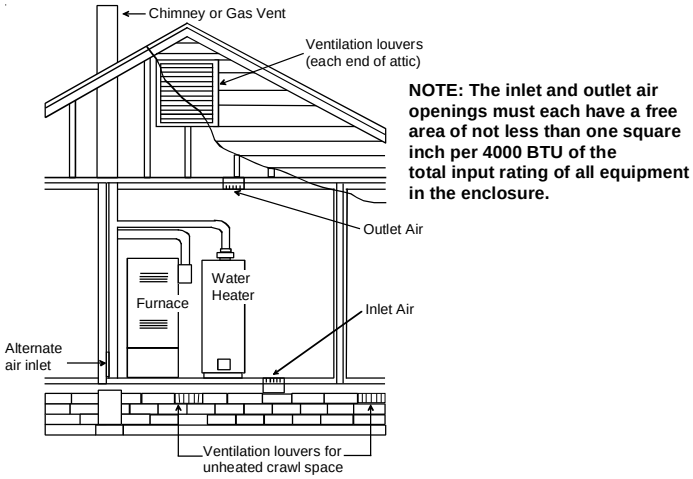

Equipment Located in Confined Spaces; All Air from Outdoors—Inlet Air from Ventilated Crawl Space and Outlet Air to Ventilated Attic. See 5.3.3-b

2. When communicating with the outdoors through vertical ducts, each opening shall have a minimum free area of 1 square inch per 4,000 BTU per hour of total input rating of all equipment in the enclosure.

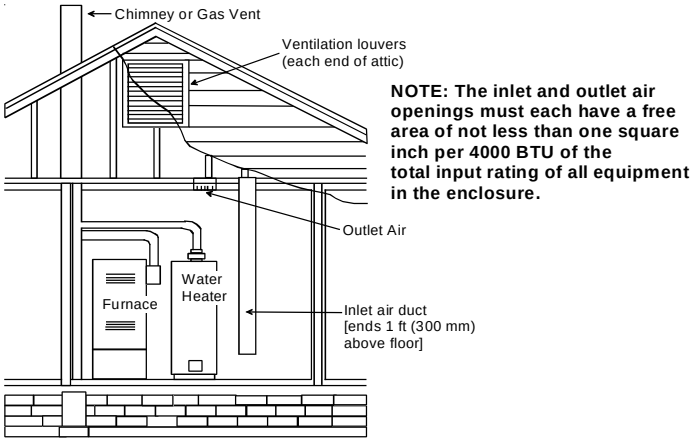

Equipment Located in Confined Spaces; All Air from Outdoors Through Ventilated Attic. See 5.3.3-b.

3. When communicating with the outdoors through horizontal ducts, each opening shall have a minimum free area of 1 square inch per 2,000 BTU per hour of total input rating of all equipment in the enclosure.

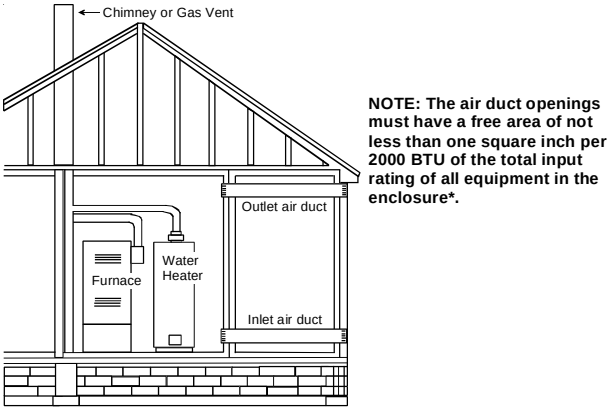

*If the appliance room is located against an outside wall and the air openings communicate directly with the outdoors, each opening shall have a free area of not less than one square inch per 4,000 BTU per hour of the total input rating of all appliances in the enclosure.

Equipment Located in Confined Spaces; All Air from Outdoors. See 5.3.3-b.

4. When ducts are used, they shall be of the same cross-sectional area as the free area of the openings to which they connect. The minimum dimension of rectangular air ducts shall not be less than 3 inches.

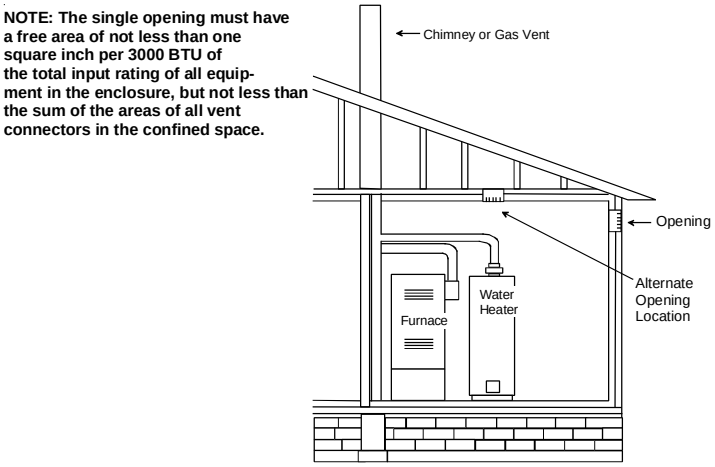

Equipment Located in Confined Spaces; All Air from Outdoors - Single Air Opening. See 5.3.3-b.

5. When directly communicating with the outdoors, the single opening shall have a minimum free area of 1 square inch per 3,000 BTU per hour of total input rating of all equipment in the enclosure.

5.3.4 Specially Engineered Installations:

The requirements of 5.3.3 shall not necessarily govern when special engineering, approved by the authority having jurisdiction, provides an adequate supply of air for combustion, ventilation, and dilution of flue gases.

5.3.5 Louvers and Grilles:

In calculating free area in 5.3.3, consideration shall be given to the blocking effect of louvers, grilles or screens protecting openings. Screens used shall not be smaller than 1/4 inch mesh. If the area through a design of louver or grille is known, it should be used in calculating the size of opening required to provide the free area specified. If the design and free area is not known, it may be assumed that wood louvers will have 20-25 percent free area and metal louvers and grilles will have 60-75 percent free area. Louvers and grilles shall be fixed in the open position or interlocked with the equipment so that they are opened automatically during equipment operation.

5.3.6 Special Conditions Created by Mechanical Exhausting or Fireplaces:

Operation of exhaust fans, ventilation systems, clothes dryers, or fireplaces may create conditions requiring special attention to avoid unsatisfactory operation of installed gas utilization equipment. Air from Inside Building. See 5.3.3-a.

VI. INSTALLATION POSITIONS

This furnace may be installed in an upright position or horizontal on either the left or right side panel. Do not install this furnace on its back. For *upright upflow* furnaces, return air ductwork may be attached to the side panel(s) and/or basepan. For *horizontal upflow* furnaces, return air ductwork must be attached to the basepan. For both *upright or horizontal counterflow* furnaces, return ductwork must be attached to the basepan (top end of the blower compartment). **NOTE:** Ductwork must never be attached to the back of the furnace. For upflow installations requiring 1,800 CFM or more, use either two side returns or a bottom return or a combination of side and bottom. Contact your distributor for proper airflow requirements and number of required ductwork connections. Refer to "Recommended Installation Positions" figure for appropriate installation positions, ductwork connections, and resulting airflow arrangements.

VII. HORIZONTAL APPLICATIONS & CONSIDERATIONS

General

Horizontal applications, in particular, may dictate many of the installation's specifics such as airflow direction, ductwork connections, flue and combustion air pipe connections, etc. The basic application of this furnace as a horizontal furnace differs only slightly from an upright installation. When installing a furnace horizontally, additional consideration must be given to the following:

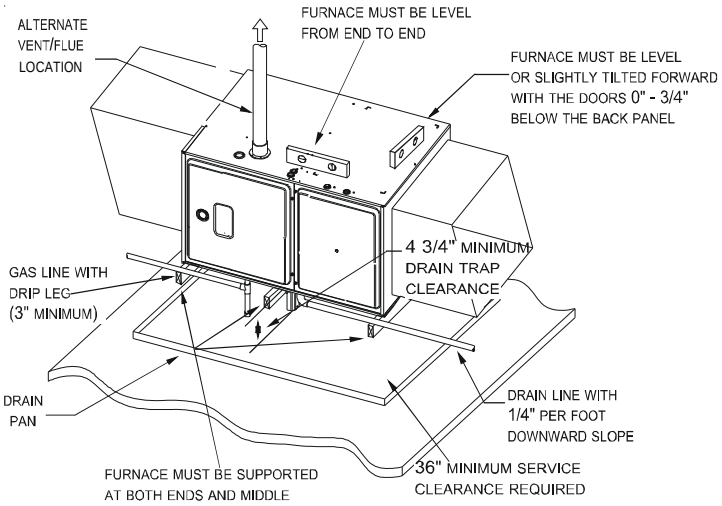

Horizontal Furnace

Drain Trap and Lines

In horizontal applications the condensate drain trap is secured to the furnace side panel, suspending it below the furnace. A minimum clearance of 4 3/4 inches below the furnace must be provided for the drain trap. Additionally, the appropriate downward piping slope must be maintained from the drain trap to the drain location. Refer to *Condensate Drain Trap and Lines* for further details. If the drain trap and drain line will be exposed to temperatures near or below freezing, adequate measures must be taken to prevent condensate from freezing.

Leveling

Leveling ensures proper condensate drainage from the heat exchanger and induced draft blower. For proper flue pipe drainage, the furnace must be level lengthwise from end to end. The furnace should also be level from back to front or have a slight tilt with the access doors downhill (approximately 3/4 inches) from the back panel. The slight tilt allows the heat exchanger condensate, generated in the recuperator coil, to flow forward to the recuperator coil front cover.

Alternate Vent/Flue and Combustion Air Connections

In horizontal installations, provisions for alternate vent/flue piping is available for upflow furnaces with left air discharge. Counterflow furnaces include provisions for both alternate vent/flue and combustion air piping with right air discharge. These configurations allow the flue and combustion air piping to be run vertically through the furnace. Refer to the "Recommended Installation Positions" figure for further detail. The standard piping connections may also be used in these positions. Refer to *Vent/Flue Pipe* and Combustion Air Pipe for details concerning the conversion to the alternate vent/flue air connections.

When using the horizontal alternate vent configuration, you must use the RF000142 vent drain kit. See following illustration.

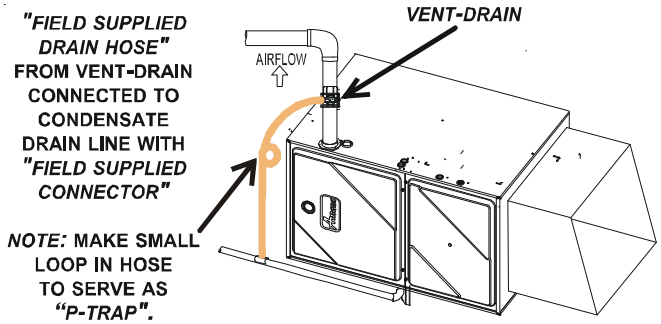

ALTERNATE FLUE/VENT LOCATION

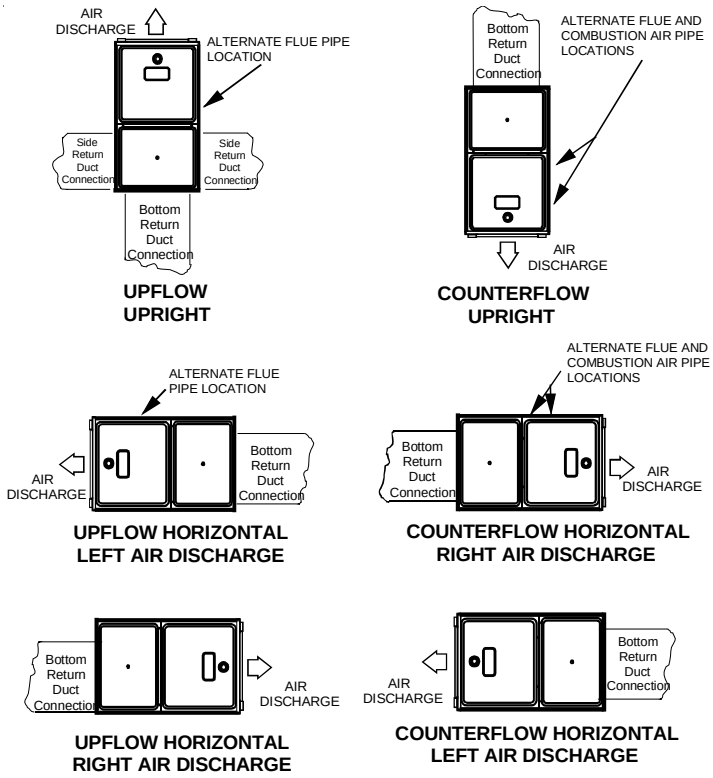

Recommended Installation Positions

NOTE: Alternate "vertical" piping connections can not be used when an upflow furnace is installed with supply air discharging to the right, or when a counterflow furnace is installed with supply air discharging to the left. In either case, use the standard flue and combustion air piping connections.

Alternate Electrical and Gas Line Connections

This furnace has provisions allowing for electrical and gas line connections through either side panel. In horizontal applications the connections can be made either through the "top" or "bottom" of the furnace.

Drain Pan

A drain pan must be provided if the furnace is installed above a conditioned area. The drain pan must cover the entire area under the furnace (and air conditioning coil if applicable).

Freeze Protection

Refer to *Horizontal Applications and Conditions - Drain Trap and Lines.*

Furnace Suspension

If the furnace is installed in a crawl space it must be suspended from the floor joist or supported by a concrete pad. Never install the furnace on the ground or allow it to be exposed to water. Refer to *Location Requirements and Considerations - Furnace Suspension* for further details.

VIII. PROPANE GAS /HIGH ALTITUDE INSTALLATIONS

WARNING

POSSIBLE PROPERTY DAMAGE, PERSONAL INJURY OR DEATH MAY OCCUR IF THE CORRECT CONVERSION KITS ARE NOT INSTALLED. THE APPROPRIATE KITS MUST BE APPLIED TO ENSURE SAFE AND PROPER FURNACE OPERATION. ALL CONVERSIONS MUST BE PERFORMED BY A QUALIFIED INSTALLER OR SERVICE AGENCY.

This furnace is shipped from the factory configured for natural gas at standard altitude. Propane gas installations require an orifice change to compensate for the energy content difference between natural and propane gas.

For furnaces being converted to LP gas, it is strongly recommended that a LPLP03 kit also be installed. The use of this kit will prevent the furnace from firing when the LP gas supply pressure is too low to support proper combustion.

High altitude installations may require both a pressure switch and an orifice change. These changes are necessary to compensate for the natural reduction in the density of both the gas fuel and the combustion air at higher altitude.
For installations above 7000 feet, please refer to your distributor for required kit(s).

***MH95, ACSH96, GCH95, GCH9 GAS ORIFICE CHART**

Altitude	Gas	Kit	Orifice	Manifold Pressure	Pressure Switch
0-7000	Natural	None	#43	3.5" w.c.	None
	Propane	LPM-06*[2]	#55	10.0" w.c.	

2 LPM-06* supports both Honeywell and White-Rodgers 2-stage valves
NOTE: In Canada, gas furnaces are certified to 4500 feet.

AMEH96, GME95 GAS ORIFICE CHART

Altitude	Gas	Kit	Orifice	Manifold Pressure	Pressure Switch
0-7000	Natural	None	#45	3.5" w.c.	None
	Propane	LPM-06*[2]	#55	10.0" w.c.	

[2] LPM-06* supports both Honeywell and White-Rodgers 2-stage valves
NOTE: In Canada, gas furnaces are certified to 4500 feet.

Contact the distributor for a tabular listing of appropriate manufacturer's kits for propane gas and/or high altitude installations. The indicated kits must be used to insure safe and proper furnace operation. All conversions must be performed by a qualified installer, or service agency.

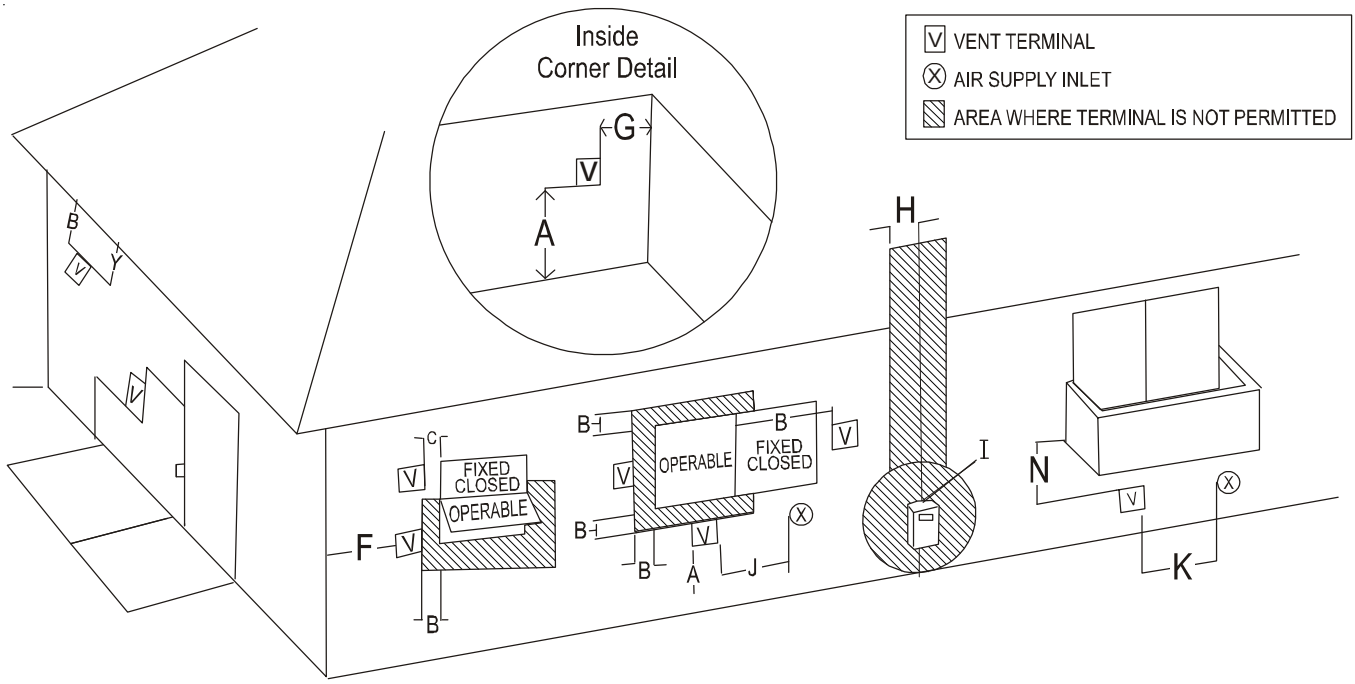

DIRECT VENT TERMINAL CLEARANCES

	Canadian Installations [1]	U.S. Installations [2]
A= Clearance above grade, veranda, porch, deck or balcony. (See 1.24.6-i(9)b.)	12 in. (30 cm)	12 in. (30 cm)
B= Clearance to window or door that may be opened.	6 in. (15 cm) for appliances 10,000 Btuh (3 kW), 12 in. (30 cm) for appliances > 10,000 Btuh (3 kW) and 100,000 Btuh (30 kW), 36 in. (91 cm) for appliances > 100,000 Btuh (30 kW).	6 in. (15 cm) for appliances 10,000 Btuh (3 kW), 9 in. (23 cm) for appliances > 10,000 Btuh (3 kW) and 50,000 Btuh (15 kW), 12 in. (30 cm) for appliances > 500,000 Btuh (15 kW).
C= Clearance to permanently closed window.	*	*
D= Vertical clearance to ventilated soffit located above the terminal within a horizontal distance of 2 feet (61 cm) from the center line of the terminal.	*	*
E= Clearance to unventilated soffit.	*	*
F= Clearance to outside corner.	*	*
G= Clearance to inside corner.	*	*
H= Clearance to each side of center line extended above meter/regulator assembly.	3 ft. (91 cm) within a height 15 ft. (4.5 m) above the meter/regulator assembly.	*

	Canadian Installations [1]	U.S. Installations [2]
I= Clearance to service regulator vent outlet.	3 ft. (91 cm).	*
J= Clearance to nonmechanical air supply inlet to building or the combustion air inlet to any other appliance.	6 in. (15 cm) for appliances 10,000 Btuh (3 kW), 12 in. (30 cm) for appliances > 10,000 Btuh (3kW) and 100,000 Btuh (30 kW), 36 in. (91 cm) for appliances > 100,000 Btuh (30 kW).	6 in. (15 cm) for appliances 10,000 Btuh (3 kW), 9 in. (23 cm) for appliances > 10,000 Btuh (3kW) and 50,000 Btuh (15 kW), 12 in. (30 cm) for appliances > 50,000 Btuh (15 kW).
K= Clearance to a mechanical air supply inlet.	6 ft. (1.83 m)	3 ft. (91 cm) above if within 10 ft. (3 m) horizontally.
L= Clearance above paved sidewalk or paved driveway located on public property.	7 ft. (2.13m) †	*
M= Clearance under veranda, porch, deck or balcony.	12 in. (30 cm) ‡	*

1 In accordance with the current *CSA B149.1, Natural Gas and Propane Installation Code.*

2 In accordance with the current *ANSI Z223.1/NFPA 54, National Fuel Gas Code.*

† A vent shall not terminate directly above a sidewalk or paved driveway that is located between two single fanily dwellings and serves both dwellings.

‡ Permitted only if veranda, porch, deck or balcony is fully open on a minimum of two sides beneath the floor.

* For clearances not specified in *ANSI Z223.1/NFPA 54* or *CSA B149.1*, the following statement shall be included:

"Clearance in accordance wtih local installation codes and the requirements of the gas supplier and the manufacturer's installation instruction."

OTHER THAN DIRECT VENT TERMINAL CLEARANCES

	Canadian Installations [1]	U.S. Installations [2]
A= Clearance above grade, veranda, porch, deck or balcony. (See 1.24.6-i(9)b.)	12 in. (30 cm)	12 in. (30 cm)
B= Clearance to window or door that may be opened.	6 in. (15 cm) for appliances 10,000 Btuh (3 kW), 12 in. (30 cm) for appliances > 10,000 Btuh (3 kW) and 100,000 Btuh (30 kW), 36 in. (91 cm) for appliances > 100,000 Btuh (30 kW).	4 ft. (1.2 m) below or to side of opening; 1 ft. (300 m) above opening.
C= Clearance to permanently closed window.	*	*
D= Vertical clearance to ventilated soffit located above the terminal within a horizontal distance of 2 feet (61 cm) from the center line of the terminal.	*	*
E= Clearance to unventilated soffit.	*	*
F= Clearance to outside corner.	*	*
G= Clearance to inside corner.	*	*
H= Clearance to each side of center line extended above meter/regulator assembly.	3 ft. (91 cm) within a height 15 ft. (4.5 m) above the meter/regulator assembly.	*

	Canadian Installations[1]	U.S. Installations[2]
I= Clearance to sevice regulator vent outlet.	3 ft. (91 cm).	*
J= Clearance to nonmechanical air supply inlet to building or the combustion air inlet to any other appliance.	6 in. (15 cm) for appliances 10,000 Btuh (3 kW), 12 in. (30 cm) for appliances > 10,000 Btuh (3kW) and 100,000 Btuh (30 kW), 36 in. (91 cm) for appliances > 100,000 Btuh (30 kW).	4 ft. (1.2 m) below or to side of opening; 1 ft. (300 m) above opening.
K= Clearance to a mechanical air supply inlet.	6 ft. (1.83 m)	3 ft. (91 cm) above if within 10 ft. (3 m) horizontally.
L= Clearance above paved sidewalk or paved driveway located on public property.	7 ft. (2.13m) †	7 ft. (2.13m)
M= Clearance under veranda, porch, deck or balcony.	12 in. (30 cm) ‡	*

1 In accordance with the current *CSA B149.1, Natural Gas and Propane Installation Code.*

2 In accordance with the current *ANSI Z223.1/NFPA 54, National Fuel Gas Code.*

† A vent shall not terminate directly above a sidewalk or paveable driveway that is located between two single family dwellings and serves both dwelling.

‡ Permitted only if veranda, porch, deck or balcony is fully open on a minimum of two sides beneath the floor.

* For clearances not specified in *ANSI Z223.1/NFPA 54* or *CSA B149.1*, the following statement shall be included:

"Clearance in accordance wtih local installation codes and the requirements of the gas supplier and the manufacturer's installation instruction."

IX. VENT/FLUE PIPE & COMBUSTION AIR PIPE

General

WARNING

Failure to follow these instructions can result in bodily injury or death. Carefully read and follow all instructions given in this section.

WARNING

Upon completion of the furnace installation, carefully inspect the entire flue system both inside and outside of the furnace to assure it is properly sealed. Leaks in the flue system can result in serious personal injury or death due to exposure to flue products, including carbon monoxide.

A condensing gas furnace achieves its high level of efficiency by extracting almost all of the heat from the products of combustion and cooling them to the point where condensation takes place. Because of the relatively low flue gas temperature and water condensation requirements, PVC pipe is used as venting material.

This furnace must not be connected to Type B, BW, or L vent or vent connector, and must not be vented into any portion of a factory built or masonry chimney except when used as a pathway for PVC as described later in this section. Never common vent this appliance with another appliance or use a vent which is used by a solid fuel appliance. Do not use commercially available “no hub connectors” other than those shipped with this product.

It is the responsibility of the installer to follow the manufacturers' recommendations and to verify that all vent/flue piping and connectors are compatible with furnace flue products. Additionally, it is the responsibility of the installer to ensure that all piping and connections possess adequate structural integrity and support to prevent flue pipe separation, shifting, or sagging during furnace operation.

Dual Certification: Non-Direct/Direct Vent

This furnace is dual certified and may be installed as a non-direct vent (single pipe) or direct vent (dual pipe) appliance. A *non-direct vent* installation requires only a vent/flue pipe, while a *direct vent* installation requires both a vent/flue pipe and a combustion air intake pipe. Refer to the appropriate section for details concerning piping size, length, number of elbows, furnace connections, and terminations.

Materials and Joining Methods

WARNING

To avoid bodily injury, fire or explosion, solvent cements must be kept away from all ignition sources (i.e., Sparks, open flames, and excessive heat) as they are combustible liquids. Avoid breathing cement vapors or contact with skin and/or eyes.

Two- or three-inch nominal diameter PVC Schedule 40 pipe meeting ASTM D1785, PVC primer meeting ASTM F656, and PVC solvent cement meeting ASTM D2564 specifications must be used. Fittings must be DWV type fittings meeting ASTM D2665 and ASTM D3311. Carefully follow the manufacturer's instructions for cutting, cleaning, and solvent cementing of PVC.

The use of Schedule 40 PVC or ABS cellular core (Foam Core) plastic pipe is also acceptable as a flue/vent and intake pipe material. PVC primer meeting ASTM F656 and PVC solvent cement meeting ASTM D2564 specifications must be used. Fittings must be DWV type fittings meeting ASTM D2665 and ASTM D3311. Carefully follow the manufactures instructions for cutting, cleaning and solvent cementing of PVC.

In addition to PVC and ABS pipe and fittings, Innoflue® by Centrotherm Eco Systems and PolyPro® by M&G Duravent are also approved vent and combustion air materials for installations in the U.S.A. and Canada. Manufacturers Installation instructions for these products must be followed. These products have specific instructions for installing, joining and terminating. Do not mix materials or components of one manufacturer with materials or components of another manufacturer.

For Canadian installations; all PVC pipe, fittings and joining materials must be UL S636 listed.

As an alternative to PVC pipe, primer, solvent cement, and fittings, ABS materials which are in compliance with the following specifications may be used. Two-or-three-inch ABS Schedule 40 pipe must meet ASTM D1527 and, if used in Canada, must be CSA listed. Solvent cement for ABS to ABS joints must meet ASTM D2235 and, if used in Canada, must be CSA listed. The solvent cement for the PVC to ABS transition joint must meet ASTM D3138. Fittings must be DWV type fittings meeting ASTM D2661 and ASTM D3311 and, if used in Canada, must be CSA listed. Carefully follow the pipe manufacturers' instructions for cutting, cleaning, and solvent cementing PVC and/or ABS.

All 90° elbows must be medium radius (1/4 bend DWV) or long radius (Long sweep 1/4 bend DWV) types conforming to ASTM D3311. A medium radius (1/4 bend DWV) elbow measures 3 1/16” minimum from the plane of one opening to the centerline of the other opening for 2” diameter pipe, and 4 9/16” minimum for 3” pipe.

Proper Vent/Flue and Combustion Air Piping Practices

Adhere to these instructions to ensure safe and proper furnace performance. The length, diameter, and number of elbows of the vent/flue pipe and combustion air pipe (when applicable) affects the performance of the furnace and must be carefully sized. All piping must be installed in accordance with local codes and these instructions.

Piping must be adequately secured and supported to prohibit sagging, joint separation, and/or detachment from the furnace. Horizontal runs of vent/flue piping must be supported every three to five feet and must maintain a 1/4 inch per foot downward slope, back towards the furnace, to properly return condensate to the furnace's drain system. Allowances should be made for minor expansion and contraction due to temperature variations. For this reason, particular care must be taken to secure piping when a long run is followed by a short offset of less than 40 inches.

Precautions should be taken to prevent condensate from freezing inside the vent/flue pipe and/or at the vent/flue pipe termination. It is our recommendation that all vent/flue piping exposed to temperatures below 35°F for extended periods of time should be insulated with 1/2” thick closed cell foam. Also all vent/flue piping exposed outdoors in excess of the terminations shown in this manual (or in unheated areas) should be insulated with 1/2” thick closed cell foam. Inspect piping for leaks prior to installing insulation.

Termination Locations

NOTES: Refer to *Location Requirements and Considerations* for combustion air contaminant restrictions.

The following bullets and diagram describe the restrictions concerning the appropriate location of vent/flue pipe and combustion air intake pipe (when applicable) terminations. Refer to *Non-Direct Vent (Single Pipe) Piping* and *Direct Vent (Dual Pipe) Piping* located in this section for specific details on termination construction.

- All terminations (flue and/or intake) must be located at least 12 inches above ground level or the anticipated snow level.
- Vent terminations (non-direct and direct vent) must terminate at least 3 feet above any forced air inlet located within 10 feet.

  NOTE: This provision does not apply to the combustion air intake termination of a direct vent application.
- The vent termination of a *non-direct vent* application must terminate at least 4 feet below, 4 feet horizontally from, or 1 foot above any door, window, or gravity air inlet into any building.
- The vent termination of a *direct vent* application must terminate at least 12 inches from any opening through which flue gases may enter a building (door, window, or gravity air inlet).
- The vent termination of vent pipe run vertically through a roof must terminate at least 12 inches above the roof line (or the anticipated snow level) and be at least 12 inches from any vertical wall (including any anticipated snow build up).
- A vent termination shall not terminate over public walkways or over an area where condensate or vapor could create a nuisance or hazard or could be detrimental to the operation of regulators, relief valves, or other equipment.
- The combustion air intake termination of a direct vent application should not terminate in an area which is frequently dusty or dirty.

NOTE: In Canada, the Canadian Fuel Gas Code takes precedence over the preceding termination restrictions.

Canadian Venting Requirements

In Canada, venting must conform to the requirements of the current CAN/CSA-B149.1-05 Installation Code. Use only CSA-listed, ULC-S636 compliant two- or three-inch diameter PVC or ABS pipe, solvent cement, and fittings throughout. The certified piping should be clearly marked with the ULC Std "S636" on the pipe and fittings. Carefully follow the pipe manufacturers' instructions for cutting, cleaning, and solvent cementing PVC and/or ABS.
The vent can be run through an existing unused chimney provided the space between the vent pipe and the chimney is insulated and closed with a weather-tight, corrosion-resistant flashing.

Standard Furnace Connections

It is the responsibility of the installer to ensure that the piping connections to the furnace are secure, airtight, and adequately supported.
As shipped, attachment "couplings" for vent/flue and combustion air intake pipe connections are provided on the furnace's top cover (upflow) or basepan (counterflow). To use the standard connections, field supplied vent/flue pipe and combustion air intake pipe (when applicable) should be secured directly to the furnace at these locations.

Vent/Flue Pipe

Vent/flue pipe can be secured to the vent/flue coupling using the rubber coupling and worm gear hose clamps provided with this furnace (see "Standard Connections" figure). The rubber coupling allows separation of the vent/flue pipe from the furnace during servicing. Combustion Air and Vent piping should be routed in a manner to avoid contact with refrigerant lines, metering devices, condensate drain lines, etc. If necessary, clearances may be increased by utilizing two 45 deg. Long-Sweep Elbows and creating an "S" joint to provide additional space at connection locations. This joint can be rotated on the fitting to establish maximum clearance between refrigerant lines, metering devices, and condensate drain lines, etc. This joint is the equivalent of one 90 deg. elbow when considering elbow count.

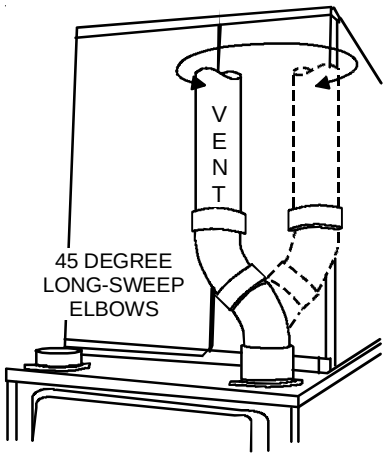

Increased Clearance Configuration

NOTE: Do not use other commercially available "no hub connectors" due to possible material conflicts. The vent/flue pipe can also be secured using a PVC or ABS elbow or coupling using the appropriate glue (see *Section IX, Materials and Joining Methods)*.

NOTE: For *non-direct vent* installations, a minimum of one 90° elbow should be installed on the combustion air intake coupling to guard against inadvertent blockage.

Combustion Air Pipe

Direct Vent Installations

On *upflow* units secure the combustion air intake pipe directly to the air intake coupling. On *counterflow* units secure the combustion air intake pipe to the air intake coupling using the rubber coupling and worm gear hose clamps provided with the unit. The counterflow rubber coupling allows service removal of air intake piping internal to the furnace blower compartment. **NOTE:** Because of probable material conflicts, do not use other commercially available "no hub connectors". The combustion air intake pipe can also be secured directly to the counterflow unit air intake pipe coupling.

Non-Direct Vent Installations

A minimum of one 90° elbow should be installed on the combustion air intake "coupling" to guard against inadvertent blockage.

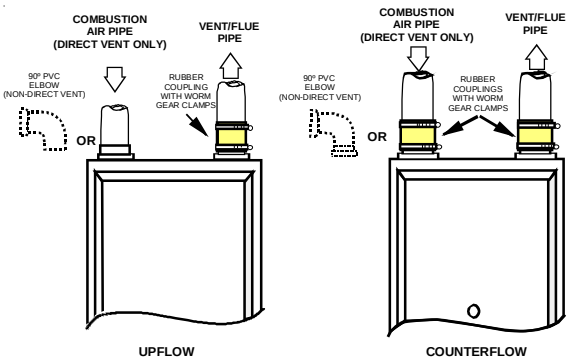

STANDARD CONNECTIONS

Alternate Furnace Connections

If the standard locations are undesirable for a specific installation, alternate side panel locations are available on the upflow models for the vent/flue. Counterflow furnaces include provisions for both alternate vent/flue and combustion air piping. These locations may be of particular benefit to upright upflow installations requiring additional access to an A coil, or to upright counterflow installations requiring additional access to a filter or electronic air cleaner, or to horizontal installations desiring vent/flue (upflow and counterflow) and combustion air intake (counterflow only) piping run vertically from the side of the cabinet.

NOTE: Standard and alternate locations can be combined (i.e., an installation may use the standard combustion air intake location but use the alternate vent/flue location), if needed.

WARNING

Edges of sheet metal holes may be sharp. Use gloves as a precaution when removing hole plugs.

Alternate Vent/Flue Location

The alternate vent/flue location is the large hole directly in line with the induced draft blower outlet. To use the alternate vent/flue location refer to the following steps, the "Vent/Flue Pipe Cuts" figure, and the "Alternate Vent/Flue Location" figure.

NOTE: Counterflow instructions follow the upflow instructions.

1. Remove and save the four screws securing the vent/flue coupling to the furnace top panel.

   Counterflow units.

1. Remove and save the four screws securing the vent/flue coupling to the furnace basepan. Also remove the three screws securing the furnace's internal vent/flue piping to the blower deck.
2. *Upflow* and *Counterflow* units.

   Loosen the worm gear hose clamps on the rubber elbow and detach it from both the induced draft blower and the vent/flue pipe.
3. *Upflow* and *Counterflow* units.

   Remove the vent/flue pipe from the furnace.
4. Cut the vent/flue pipe 3.75 inches from the flanged end of the pipe. *See Vent/Flue Pipe Cuts figure.* The section of pipe attached to the coupling will reach through the side panel to the induced draft blower. Discard remaining pipe and elbows.

   Counterflow units.

   Cut the vent/flue pipe 3.75 inches from the blower deck coupling. *See Vent/Flue Pipe Cuts figure.* Save vent/flue pipe attached to blower deck coupling for use in the alternate location. Discard remaining pipe and elbows.

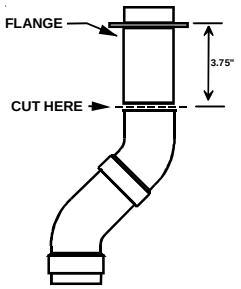

Vent/Flue Pipe Cuts

5. Remove plastic plug from alternate vent/flue location. Relocate and install plug in standard vent/flue location (top cover).

   Counterflow units.

   Remove plastic plug from alternate vent/flue location. Relocate and install plug in standard vent/flue location (basepan). Plug remaining hole in blower deck with plastic plug included in the drain kit bag.
6. *Upflow* and *Counterflow* units.

   Insert cut section of vent/flue pipe and coupling into alternate vent/flue location. Using a rubber coupling and worm gear hose clamps from the drain kit bag, attach the vent/flue pipe and coupling to the induced draft blower. Secure the coupling to the cabinet using the screws removed in step 1 or with field-supplied 3/8" #8 self drilling screws.

WARNING

The rubber elbow is not designed to support a load. When the rubber elbow is mounted externally to the furnace cabinet, extreme care must be taken to adequately support field-supplied vent/flue piping, as damage can result in leaks causing bodily injury or death due to exposure to flue gases, including carbon monoxide.

7. *Upflow* and *Counterflow* units.

   For **upright installations**, externally mount the rubber elbow to the vent/flue coupling using a worm gear hose clamp. Secure field supplied vent/flue piping to the rubber elbow using a worm gear hose clamp. **NOTE:** Use of the alternate vent/flue location for upright installations, requires the drain trap be installed on the same side of the unit as the flue pipe.
8. *Upflow* and *Counterflow* units.

   For ***horizontal installations***, externally secure the field-supplied vent/flue pipe directly to the vent/flue coupling using a PVC or ABS coupling or elbow.

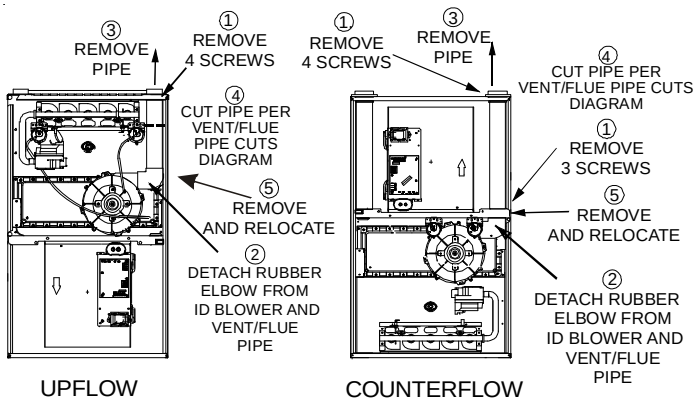

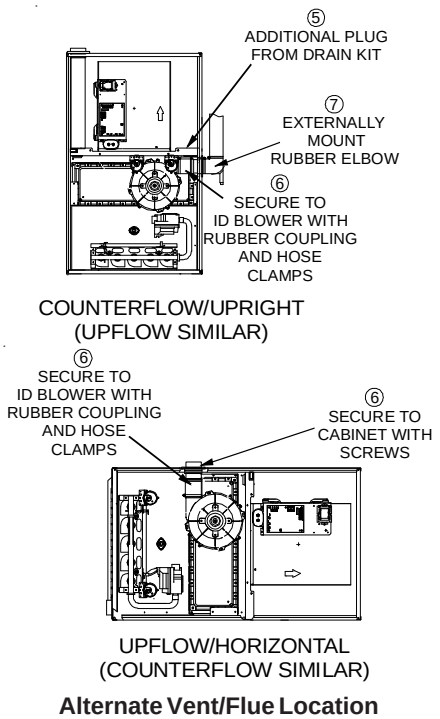

Alternate Vent/Flue Location

Non-Direct Vent (Single Pipe) Piping

Non-direct vent installations require only a vent/flue pipe. The vent pipe can be run horizontally with an exit through the side of the building or run vertically with an exit through the roof of the building. The vent can also be run through an existing *unused* chimney; however, it must extend a minimum of 12 inches above the top of the chimney. The space between the vent pipe and the chimney must be closed with a weather-tight, corrosion-resistant flashing. For details concerning connection of the vent/flue pipe to the furnace, refer to *Vent/Flue Pipe and Combustion Air - Standard Furnace Connections or Alternate Furnace Connections* for specific details. Refer to the following *Non-Direct Vent (Single Pipe) Piping - Vent/Flue Pipe Terminations* for specific details on termination construction.

Although *non-direct vent* installations do not require a combustion air intake *pipe*, a minimum of one 90° elbow should be attached to the furnace's combustion air intake *if*: an upright installation uses the standard intake location. This elbow will guard against inadvertent blockage of the air intake.

Vent/Flue Pipe Lengths and Diameters

Refer to the following table for applicable length, elbows, and pipe diameter for construction of the vent/flue pipe system of a non-direct vent installation. In addition to the vent/flue pipe, a single 90° elbow should be secured to the combustion air intake to prevent inadvertent blockage. The tee used in the vent/flue termination must be included when determining the number of elbows in the piping system.

*MH95/ACSH96/AMEH96/GCH95/GME95 Direct Vent (2 - Pipe) and Non-Direct Vent (1- Pipe) (6)										
Maximum Allowable Length of Vent/Flue Pipe & Combustion Air Pipe (ft) (1) (2)										
Unit Input (Btu)	Pipe Size (4) (in.)	Number of Elbows (3) (5)								
		0	1	2	3	4	5	6	7	8
40,000	2 or 2 1/2	100	95	90	85	80	75	70	65	60
45,000	2 or 2 1/2	250	245	240	235	230	225	220	215	210
60,000	2 or 2 1/2	110	105	100	95	90	85	80	75	70
70,000	2 or 2 1/2	220	215	210	205	200	195	190	185	180
80,000	2 or 2 1/2	35	30	25	20	15	10	Not Applicable		
80,000	3	132	125	118	111	104	97	90	83	76
90,000	2 or 2 1/2	45	40	35	30	25	20	Not Applicable		
90,000	3	147	140	133	126	119	112	105	98	91
100,000	3	98	91	84	77	70	63	56	49	42
115,000	3	140	133	126	119	112	105	98	91	84

1) Maximum allowable limits listed on individual lengths for inlet and flue and NOT a combination.
2) Minimum requirement for each vent pipe is five (5) feet in length and one elbow/tee.
3) Tee used in the vent/flue termination must be included when determining the number of elbows in the piping system.
4) 2 1/2" or 3" diameter pipe can be used in place of 2" diameter pipe.
5) Increased Clearance Configurations using (2) 45 deg. Long Sweep elbows should be considered equivalent to one 90 deg. elbow.
6) One 90° elbow should be secured to the combustion air intake connection.

Vent/Flue Pipe Terminations

NOTE: If either a 90 degree or 45 degree elbow is used for termination, it must be pointed downward.

The vent/flue pipe may terminate vertically, as through a roof, or horizontally, as through an outside wall.

Vertical vent/flue pipe terminations should be as shown in the following figure. Refer to *Vent/Flue Pipe and Combustion Air Pipe - Termination Locations* for details concerning location restrictions. The penetration of the vent through the roof must be sealed tight with proper flashing such as is used with a plastic plumbing vent.

Horizontal vent/flue pipe terminations should be as shown in the following figure. Refer to *Section IX, Vent/Flue Pipe and Combustion Air Pipe - Termination Locations* for details concerning location restrictions. A 2 3/8" diameter wall penetration is required for 2" diameter pipe. A 3" diameter hole is required for a 2 1/2" pipe and a 3 1/2" diameter hole is required for 3" diameter pipe. To secure the pipe passing through the wall and prohibit damage to piping connections, a coupling should be installed on either side of the wall and solvent cemented to a length of pipe connecting the two couplings. The length of pipe should be the wall thickness plus the depth of the socket fittings to be installed on the inside and outside of the wall. The wall penetration should be sealed with silicone caulking material.

In a basement installation, the vent/flue pipe can be run between joist spaces. If the vent pipe must go below a joist and then up into the last joist space to penetrate the header, two 45° elbows should be used to reach the header rather than two 90° elbows.

NOTE: Terminate both pipes in the same pressure zone (same side of roof, no major obstacles between pipes, etc.)

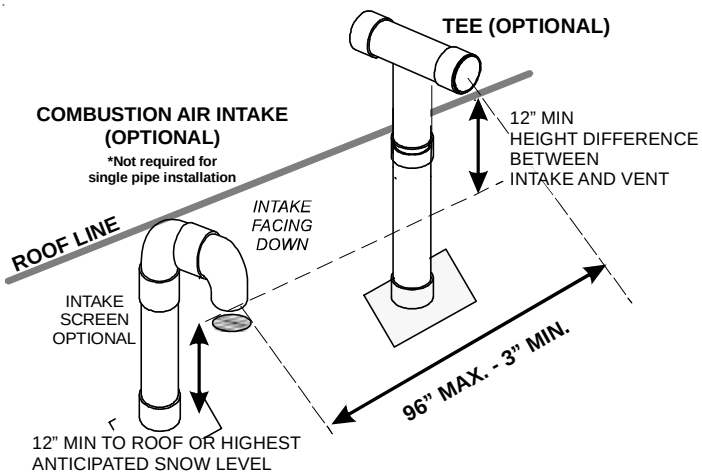

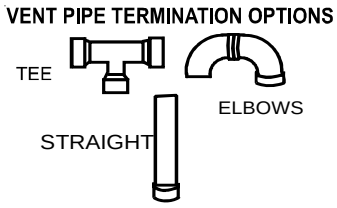

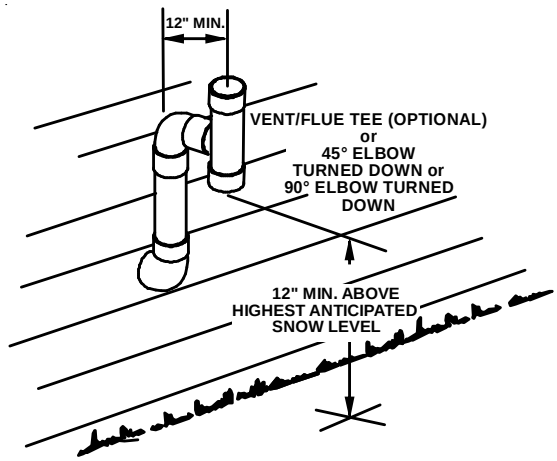

Horizontal Termination (Single Pipe)
Above Highest Anticipated Snow Level

Direct Vent (Dual Pipe) Piping

The inlet air screens provided in the installation instruction packet are available for the installer to use in the inlet of the combustion air pipe to prevent animals from building nests in the combustion air pipe. Installation of screens, while strongly recommended, is not required and will not affect performance of the unit.

Direct vent installations require both a combustion air intake and a vent/flue pipe. The pipes may be run horizontally and exit through the side of the building or run vertically and exit through the roof of the building. The pipes may be run through an existing *unused* chimney; however, they must extend a minimum of 12 inches above the top of the chimney. The space between the pipes and the chimney must be closed with a weather tight, corrosion resistant flashing. Both the combustion air intake and a vent/flue pipe terminations must be in the same atmospheric pressure zone. For details concerning connection of pipes to the furnace, refer to the *Vent/Flue Pipe and Combustion Pipe - Standard Furnace Connections or Alternate Furnace Connections.*

Vent/Flue and Combustion Air Pipe Lengths and Diameters

Refer to the following table for applicable length, elbows, and pipe diameter for construction of the vent/flue and combustion air intake pipe systems of a direct vent (dual pipe) installation. The number of elbows tabulated represents the number of elbows and/or tees in each (Vent/Flue & Combustion Air Intake) pipe. Elbows and/or tees used in the terminations must be included when determining the number of elbows in the piping systems.

If the combustion air intake pipe is to be installed above a finished ceiling or other area where dripping of condensate will be objectionable, insulation of the combustion air pipe may be required. Use 1/2" thick closed cell foam insulation such as Armaflex™ or Insultube where required.

Vent/Flue and Combustion Air Pipe Terminations

The vent/flue and combustion air pipes may terminate vertically, as through a roof, or horizontally, as through an outside wall.

Refer to Vent/Flue Pipe and Combustion Pipe - Termination Locations for details concerning location restrictions. The penetrations through the roof must be sealed tight with proper flashing such as is used with a plastic plumbing vent.

Horizontal terminations should be as shown in the following figure. Refer to *Vent/Flue Pipe and Combustion Pipe - Termination Location* for location restrictions. A 2 3/8" diameter wall penetration is required for 2" diameter pipe. A 3" diameter hole is required for a 2 1/2" pipe and a 3 1/2" diameter hole is required for 3" diameter pipe. The wall penetration should be sealed with silicone caulking material.

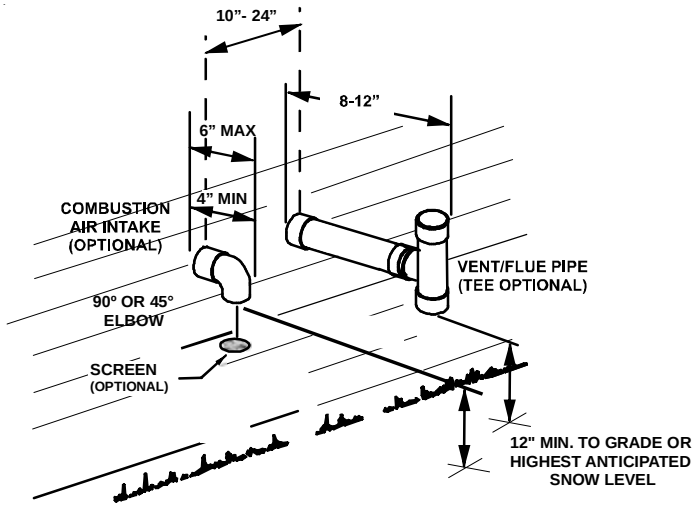

Standard Horizontal Terminations (Dual Pipe)

Vent & Combustion Air Intake Measurements for Standard Horizontal Terminations (Dual Pipe)

Center to center = 10" min / 24" max.
Vertical separation: 0" - 24"
Vent termination from wall = 8" min / 12" max.
Combustion air intake from wall = 6" max.
Vent and intake clearance to ground
or anticipated snow level = 12" min.

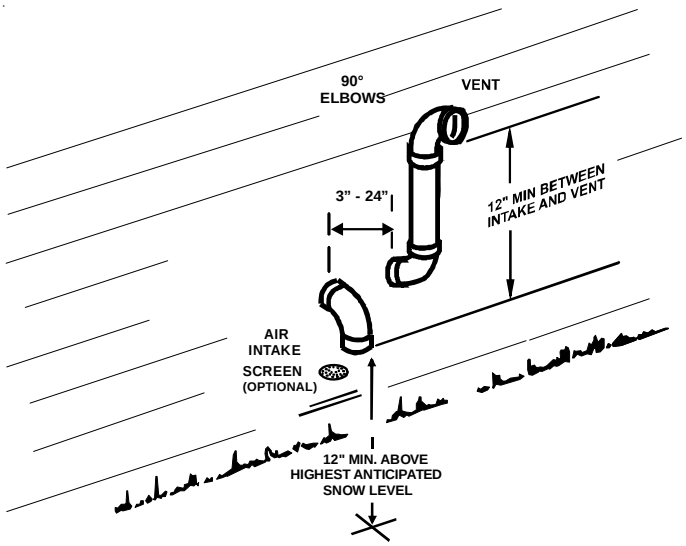

Alternate Horizontal Vent Termination (Dual Pipe)

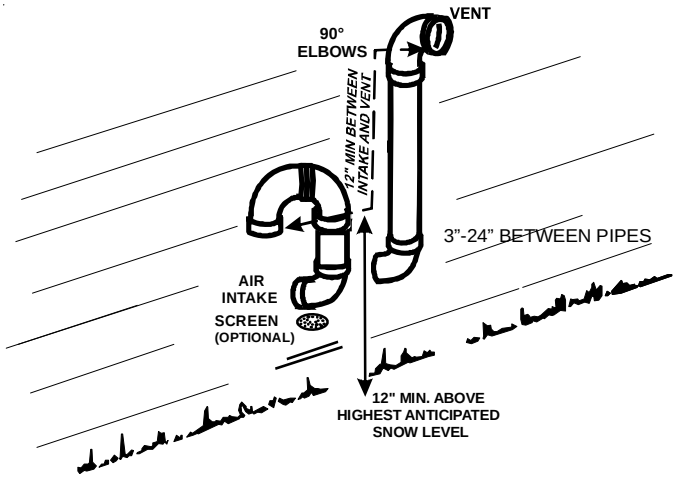

Combustion Air Intake may also be snorkeled to obtain 12" min. ground clearance.

Alternate Vent Termination Above Anticipated Snow Level (Dual Pipe)

In a basement installation, the pipes may be run between the joist spaces. If the pipes must go below the joist and then up into the last joist space to penetrate the header, two 45° elbows should be used to reach the header rather than two 90° elbows.

Vent/Intake Terminations For Installation of Multiple Direct Vent Furnaces

If more than one direct vent furnace is to be installed vertically through a common roof top, maintain the same minimum clearances between the exhaust vent and air intake terminations of adjacent units as with the exhaust vent and air intake terminations of a single unit.

If more than one direct vent furnace is to be installed horizontally through a common side wall, maintain the clearances as in the following figure. Always terminate all exhaust vent outlets at the same elevation and always terminate all air intakes at the same elevation.

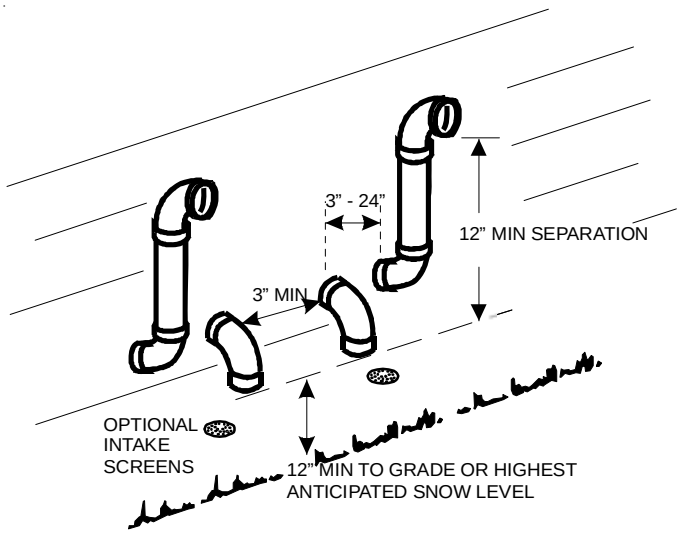

Termination of Multiple Direct Vent Furnaces

Concentric Vent Termination

Refer to the directions provided with the Concentric Vent Kit (DCVK) for installation specifications.

Side Wall Vent Kit

This kit is to be used with 2" or 3" direct vent systems. The vent kit must terminate outside the structure and may be installed with the intake and exhaust pipes located side-by-side or with one pipe above the other. This kit is **NOT** intended for use with single pipe (indirect vent) installations.

Refer to the directions furnished with the Side Wall Vent Kit (p/n 0170K00000S) for installation specifications.

X. CONDENSATE DRAIN LINES & DRAIN TRAP

A condensing gas furnace achieves its high level of efficiency by extracting almost all of the heat from the products of combustion and cooling them to the point where condensation takes place. The condensate which is generated must be piped to an appropriate drain location.

In *upright* installations, the furnace's drain hoses may exit either the right or left side of the furnace. **NOTE:** If the alternate vent/flue outlet is utilized in an upright installation, the drain trap and drain connections must be located on the same side as the alternate vent/flue outlet.

In *horizontal* installations, the drain hoses will exit through the bottom (down side) of the unit with the drain trap suspended beneath the furnace. The field-supplied drain system must be in accordance with all local codes and the instructions in the following sections.

Follow the bullets listed below when installing the drain system. Refer to the following sections for specific details concerning furnace drain trap installation and drain hose hook ups.

- The drain trap supplied with the furnace must be used.
- The drain line between furnace and drain location must maintain a 1/4 inch per foot downward slope toward the drain.
- Do not trap the drain line in any other location than at the drain trap supplied with the furnace.
- If the drain line is routed through an area which may see temperatures near or below freezing, precautions must be taken to prevent condensate from freezing within the drain line.

- If an air conditioning coil is installed with the furnace, a common drain may be used. An open tee must be installed in the drain line, near the cooling coil, to relieve positive air pressure from the coil's plenum. This is necessary to prohibit any interference with the function of the furnace's drain trap.

NOTE: In vertical installations, air conditioning coil condensate may drain into the furnace trap as long as there is a trap between the coil and the furnace trap and the drain pipe is not terminating below the water level of the furnace trap.

Standard Right or Left Side Drain Hose Connections

All installations positions require the use of the drain trap, hoses, tubes, and clamps. The following quantity of hoses, tubes, and hose clamps are provided with the unit.

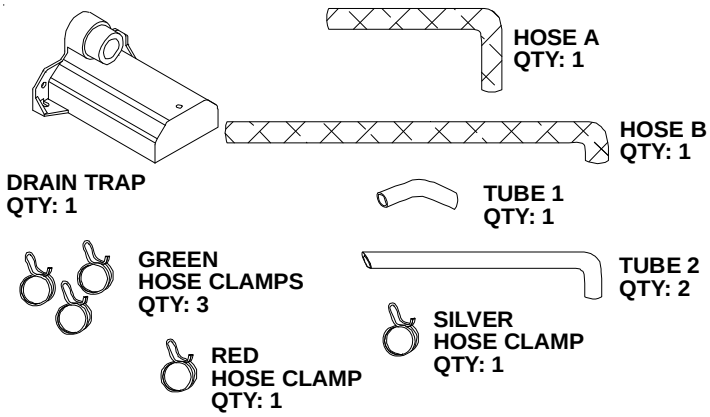

Hose and Tube Identification

In a upright installation drain hoses are connected to drain ports on the rubber elbow and the recuperator coil front cover. The drain lines are then routed through the right side panel and into the drain trap secured to the outside of the cabinet.

NOTE: Refer to *Alternate Vent/Flue Hose Connections* for upright installations using an alternate vent/flue outlet.

1. Remove the rubber plug from the right side of the front cover drain port.
2. Secure Hose A to front cover drain port with a red hose clamp. Route hose to rear side panel grommet hole.
3. Cut and remove 1/4 inch from the end of the drain port on the rubber elbow.
4. Insert Tube 1 into rubber elbow drain port and secure with silver hose clamp. Angle tube outward toward front of furnace.
5. Cut 17 3/4 inches from the long end of Hose B and discard. Secure the remaining hose to Tube 1 with a green hose clamp. Route the other end of Hose B to front right side panel grommet hole.

For details concerning mounting of the drain trap, refer to *Vertical Drain Trap Mounting.*

6. Insert short end of each of tube 2 through side panel grommet holes. Secure tubes to hoses A and B with green hose clamps. Ensure hoses and tubes maintain a downward slope for proper drainage and that they are not kinked or binding.

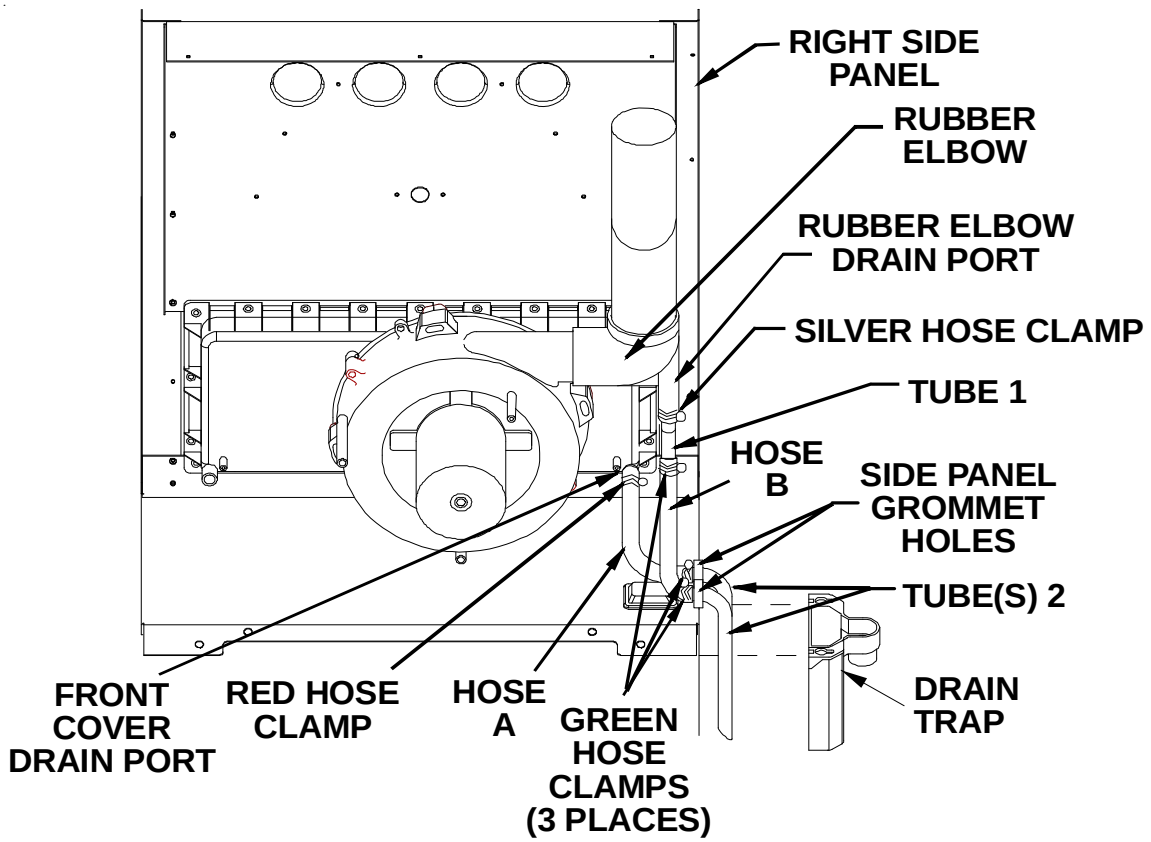

Upright "Standard" Connections -Right Side (Upflow Shown, Counterflow Similar)

Alternate Vent/Flue Drain Hose Connections

Upright installations using the *alternate* vent/flue outlet will require "right-side only" drain hoses to be connected as follows. Refer to *Vent/Flue Pipe and Combustion Air Pipe* for details on alternate vent/flue pipe connection.

1. Remove the rubber plug from the right-side drain port on the front cover . Save for use in step 3.
2. Secure Hose A to front cover drain port with a red hose clamp. Route hose to rear right side panel grommet hole.
3. Remove grommet from front right-side panel drain hole. Seal hole in grommet with large end of plug. Reinstall grommet and plug into side panel drain hole.
4. Cut 1/4 inch from the end of the drain port on the externally mounted rubber elbow. Discard cut portion.
5. Insert Tube 1 into rubber elbow drain port and secure with a silver hose clamp. Angle tube toward trap.
6. Cut 17 3/4 inches from the long end of Hose B and discard.
7. Secure straight end of Hose B to exposed end of Tube 1 with a green hose clamp. Route hose toward right side panel grommet holes.
8. Insert short end of one Tube 2 through rear right side panel grommet drain hole. Secure tube to Hose A with a green hose clamp.
9. Insert short end of remaining Tube 2 into Hose B from rubber elbow and secure with green hose clamp. Ensure hoses and tubes maintain a downward slope for proper drainage and are not kinked or binding.

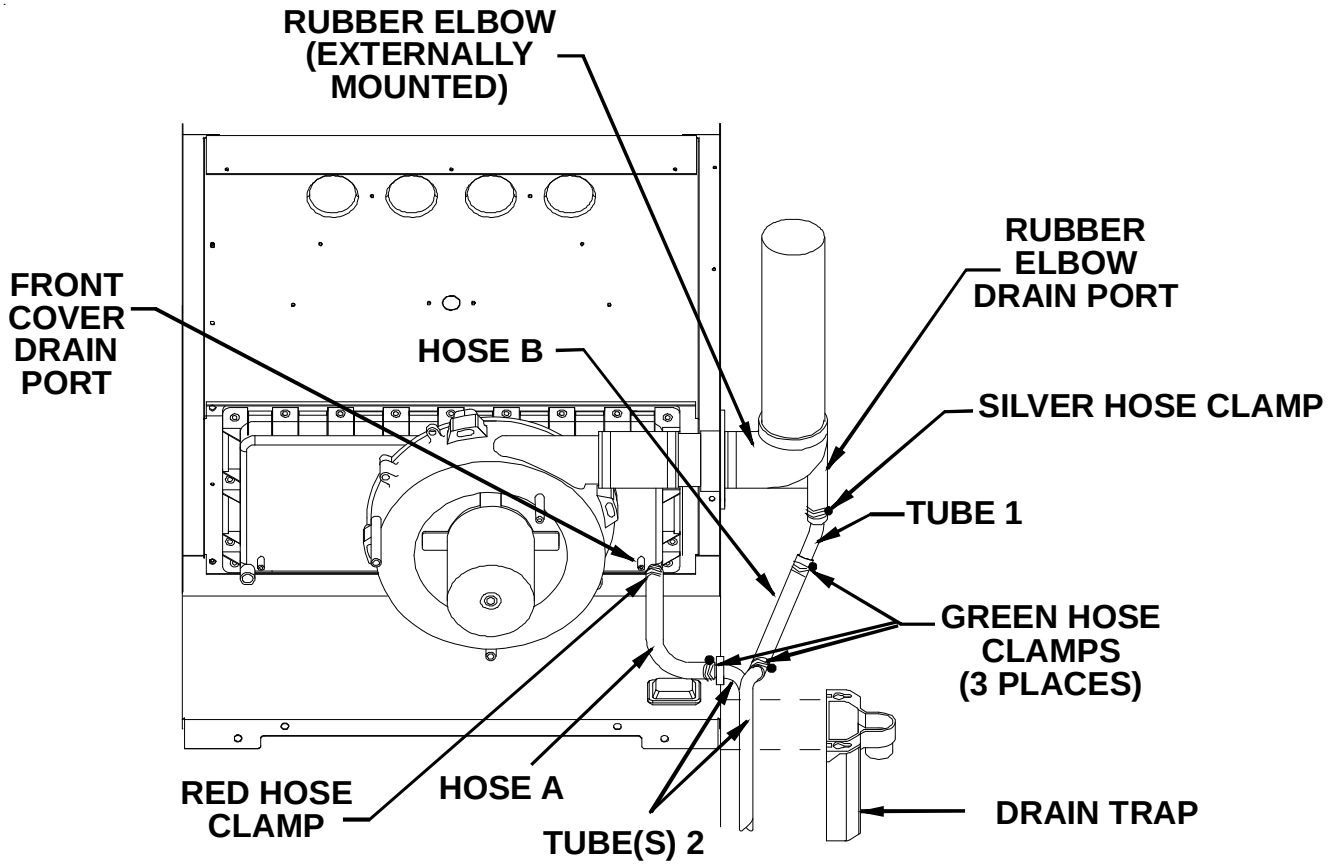

Upright "Alternate: Connections - Right Side Only

(Upflow Shown, Counterflow Similar)

UPRIGHT INSTALLATIONS-TRAP ON LEFT SIDE

NOTE: For left side trap installation, grommets must be moved to the left side of the furnace and the plugs installed on the right side of the furnace.

1. Remove the rubber plug from the left side drain port on the front cover.
2. Secure Hose A to front cover drain port with a red hose clamp. Route hose to rear side panel grommet hole.
3. Cut and remove 1/4 inch from the end of the drain port on the rubber elbow.
4. Insert Tube 1 into rubber elbow drain port and secure with silver hose clamp. Angle tube outward toward front of furnace.
5. Cut "X" inches from the long end of Hose B and discard. Refer to table for appropriate length to cut. Secure remaining hose to Tube 1 with a green hose clamp. Route other end of Hose B to front left side panel grommet hole.

NOTE: Long hose "B" must always be connected to Tube 1 and the elbow and not on the front cover.

6. Insert short end of each Tube 2 through side panel grommet holes. Secure tubes to Hose A and Hose B with green hose clamps. Ensure hoses and tubes maintain a downward slope for proper drainage and that they are not kinked or binding.

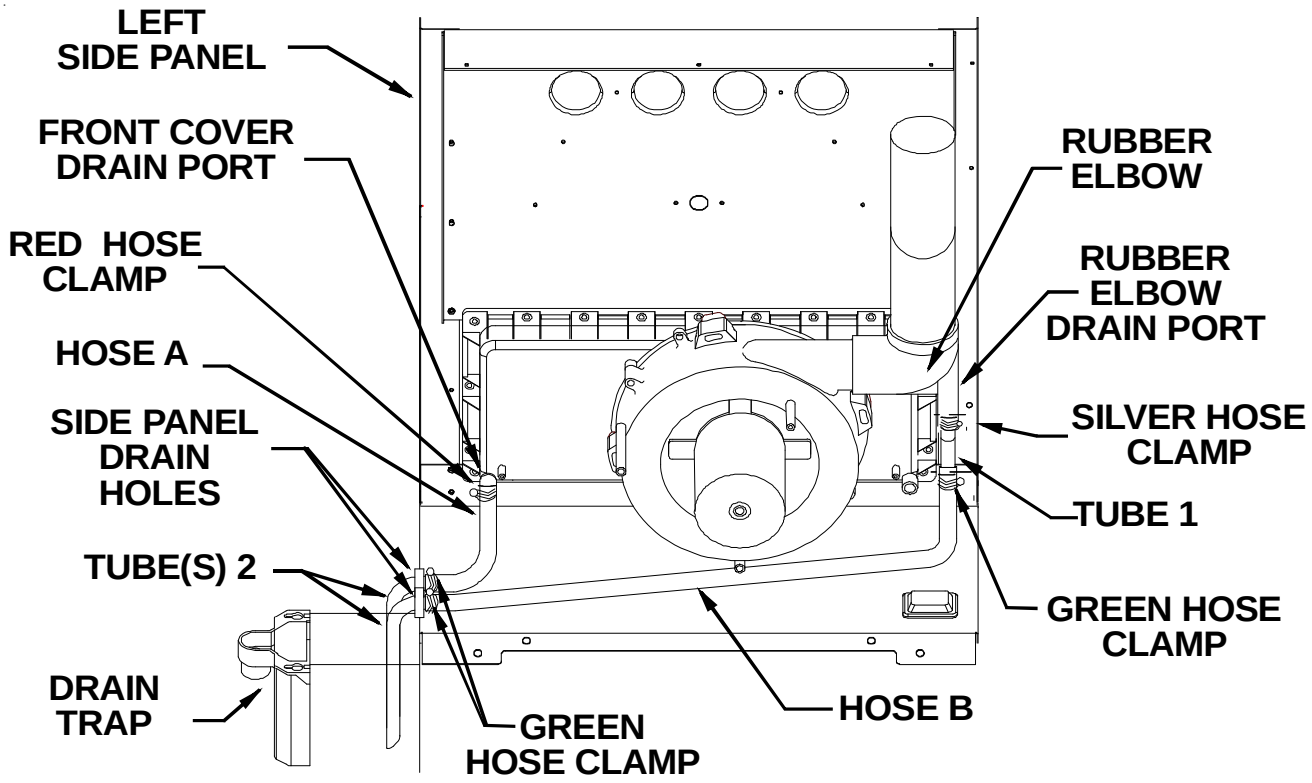

Upright "Standard" Connections - Left Side
(Upflow Shown, Counterflow Similar)

Cabinet Width (inches)	Models (kBTU_Tons)	"X" Length to Cut From Long End of Hose B (inches)
17 1/2	040_3, 045_30, 060_3	7
21	070_40, 080_5	3 1/2
24 1/2	090_50, 100_5 115_50	None

Upright Drain Trap Mounting (Left or Right Side Panel)

1. Insert drain tubes into drain trap and position the drain trap against the side panel. **NOTE:** Drain tubes must reach the bottom of the drain trap.
2. Secure drain trap to side panel at the mounting holes (dimples or crosshairs on counterflow models) located below the grommet drain holes.
3. Attach PVC drain line to drain trap outlet with either a 90° elbow or coupling.

Horizontal Installations

Right Side Down

Horizontal installations with the right side down require that the drain hoses be connected to the right side front cover drain port and the rubber elbow drain port.

NOTE: On counterflow models, relocation of the front cover pressure switch hose is required.

Make connections as follows:

1. Remove the rubber plug from right side of the front cover drain port.

   Counterflow furnaces

   Relocate the front cover pressure switch hose connection from the left side pressure tap to the right (down) side tap. The pressure switch hose must be connected to the down side to guard against blocked drain conditions. Cut hose to appropriate length to minimize sagging. Plug left (unused) pressure tap with plug removed from right side.
2. Secure Hose A to front cover drain tap with a red hose clamp. Route hose to rear right (down) side panel grommet holes.
3. Cut 1/4 inch from the end of the drain port on the rubber elbow and discard.
4. Insert Tube 1 into rubber elbow drain port and secure with a silver hose clamp. Angle tube outward toward front of furnace.
5. Cut 17 3/4 inches from the long end of Hose B and discard.
6. Secure remaining end of Hose B to exposed end of Tube 1 with a green hose clamp. Route hose to front right down side panel grommet holes.
7. Cut 5 1/2 inches straight length from the long end of each Tube 2 and discard the radius pieces.
8. Insert approximately one inch of each Tube 2 through the right down side panel grommet holes. Secure tubes to Hose A and Hose B using green hose clamps. Ensure hoses and tubes maintain a downward slope for proper drainage and are not kinked or bound.

For details concerning mounting of the drain trap, refer to *Condensate Drain Lines and Drain Trap - Horizontal Drain Trap Mounting.*

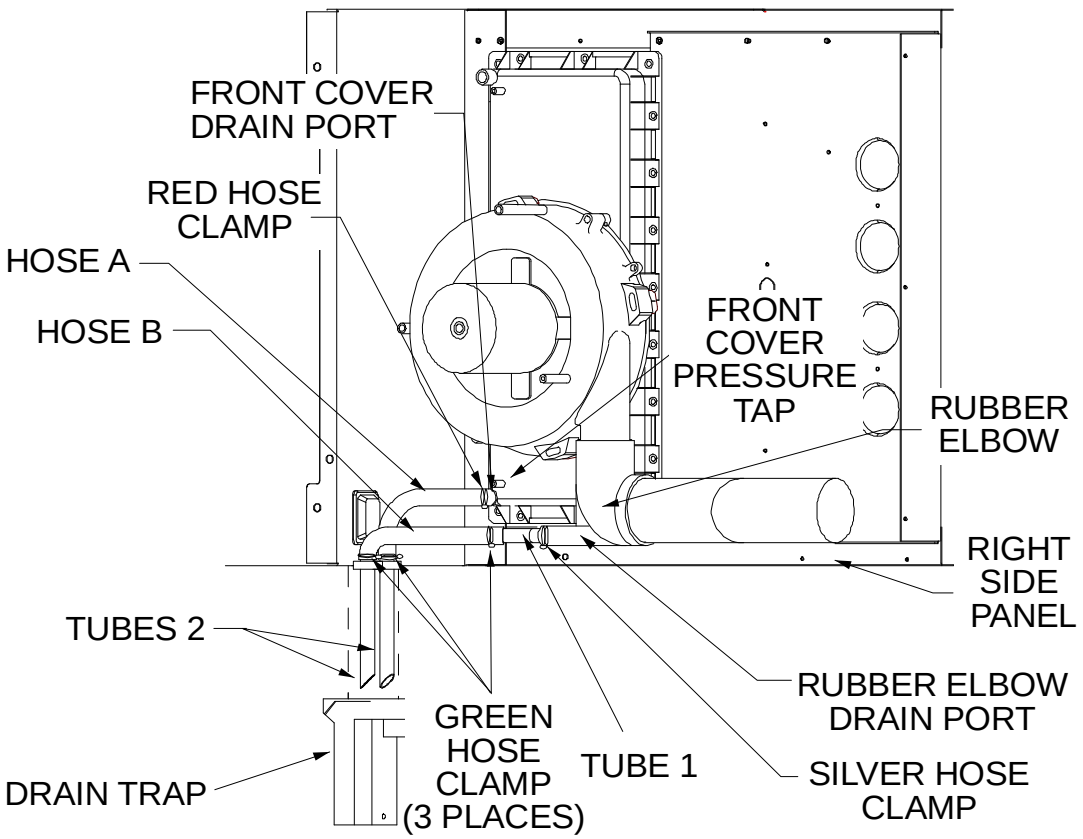

Horizontal Connections - Right Side Down (Upflow Shown, Counterflow Similar)

Left Side Down

Horizontal installations with the left side panel down will require drain hoses to be connected to the left side front cover drain port and the side drain port on the rubber elbow.

1. Remove the rubber plug from the front cover left (down) side drain port.
2. Relocate the front cover pressure switch hose connection from the right side (as shipped) pressure tap to the left (down) side tap. The pressure switch hose must be connected to the down side to guard against blocked drain conditions. Cut hose to appropriate length to minimize sagging. Plug right (unused) pressure tap with plug removed from left side.
3. Secure Hose A to front cover drain port with a red hose clamp. Route hose to rear left (down) side panel grommet holes. **NOTE:** For left side drainage, grommets must be relocated to left side panel.
4. Remove the rubber cap from the side drain port on the rubber elbow.
5. Secure the short end of Hose B to rubber elbow side drain port using a green hose clamp. **NOTE:** For left side drainage, route hose to far left (down) side panel grommet holes. **NOTE:** Horizontal left side connections (when using new side port drain elbow) does not require connecting a hose to the induced draft blower housing.
6. Cut 5 1/2 inches straight length from the long end of each Tube 2 and discard radius ends.
7. Insert approximately one inch of each Tube 2 through left side panel grommet hole. Secure tubes to Hose A and Hose B with a green hose clamps. **NOTE:** Tube must reach bottom of trap. Ensure hoses and tubes maintain a downward slope for proper drainage and that they are not kinked or binding.

For details concerning mounting of the drain trap, refer to *Condensate Drain Lines and Drain Trap - Horizontal Drain Trap Mounting.*

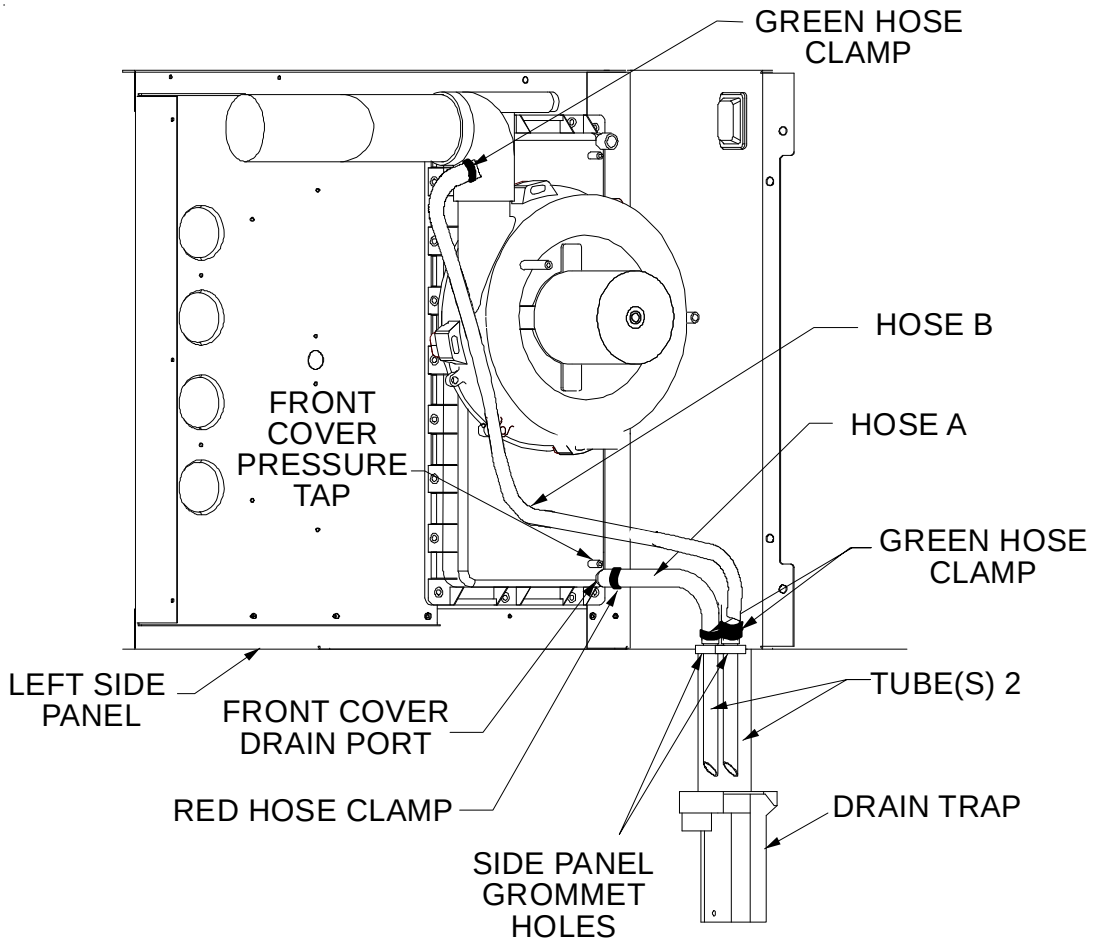

Horizontal Connections - Left Side Down (Upflow Shown, Counterflow Similar)

Horizontal Drain Trap Mounting (Left or Right Side Panel)

1. Position the drain trap against side panel with drain tubes inserted into trap. Note that the trap may be orientated with the outlet facing either the furnace's top cover or base pan.
2. Secure drain trap to side panel at the dimples or crosshairs located on either side of the grommet drain holes.
3. Confirm that tubes reach bottom of drain trap and that all hoses maintain a downward slope and are not kinked or binding.
4. Attach PVC drain line to drain trap outlet with either a 90° elbow or coupling.

XI. ELECTRICAL CONNECTIONS

WARNING

HIGH VOLTAGE!
TO AVOID THE RISK OF ELECTRICAL SHOCK, WIRING TO THE UNIT MUST BE POLARIZED AND GROUNDED.

WARNING

HIGH VOLTAGE!
TO AVOID PERSONAL INJURY OR DEATH DUE TO ELECTRICAL SHOCK, DISCONNECT ELECTRICAL POWER BEFORE SERVICING OR CHANGING ANY ELECTRICAL WIRING.

CAUTION

LABEL ALL WIRES PRIOR TO DISCONNECTION WHEN SERVICING CONTROLS. WIRING ERRORS CAN CAUSE IMPROPER AND DANGEROUS OPERATION. VERIFY PROPER OPERATION AFTER SERVICING.

WIRING HARNESS

The wiring harness is an integral part of this furnace. Field alteration to comply with electrical codes should not be required. Wires are color coded for identification purposes. Refer to the wiring diagram for wire routings. If any of the original wire as supplied with the furnace must be replaced, it must be replaced with wiring material having a temperature rating of at least 105°C. Any replacement wiring must be copper conductor.

115 VOLT LINE CONNECTIONS

Before proceeding with electrical connections, ensure that the supply voltage, frequency, and phase correspond to that specified on the unit rating plate. Power supply to the furnace must be N.E.C. Class 1, and must comply with all applicable codes. The furnace must be electrically grounded in accordance with local codes or, in their absence, with the latest edition of The National Electric Code, ANSI NFPA 70 and/or The Canadian Electric Code CSA C22.1.
Use a separate fused branch electrical circuit containing properly sized wire, and fuse or circuit breaker. The fuse or circuit breaker must be sized in accordance with the maximum overcurrent protection specified on the unit rating plate. An electrical disconnect must be provided at the furnace location.

NOTE: Line polarity must be observed when making field connections.

Connect hot, neutral, and ground wires as shown in the wiring diagram located on the unit's blower door. For direct vent applications, the cabinet opening to the junction box must be sealed air tight using either a UL approved bushing such as Heyco Liquid Tight or by applying a UL approved non-reactive sealant to bushing.
Line polarity must be observed when making field connections.

Line voltage connections can be made through either the right or left side panel. The furnace is shipped configured for a left side (right side for counterflows) electrical connection with the junction box located inside the burner compartment. To make electrical connections through the opposite side of the furnace, the junction box must be relocated to the other side of the burner compartment prior to making electrical connections. To relocate the junction box, observe the following steps.

JUNCTION BOX RELOCATION

WARNING

EDGES OF SHEET METAL HOLES MAY BE SHARP. USE GLOVES AS A PRECAUTION WHEN REMOVING HOLE PLUGS.

1. Remove the burner compartment door.
2. Remove and save the two screws securing the junction box to the side panel.
3. Relocate junction box and associated plugs and grommets to opposite side panel. Secure with screws removed in step 2.

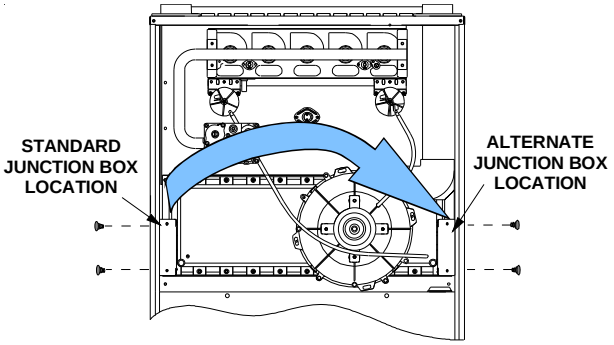

Junction Box Relocation

WARNING

HIGH VOLTAGE!
TO AVOID THE RISK OF INJURY, ELECTRICAL SHOCK OR DEATH, THE FURNACE MUST BE ELECTRICALLY GROUNDED IN ACCORDANCE WITH LOCAL CODES OR IN THEIR ABSENCE, WITH THE LATEST EDITION OF THE NATIONAL ELECTRIC CODE.

To ensure proper unit grounding, the ground wire should run from the furnace ground screw located inside the furnace junction box all the way back to the electrical panel. **NOTE:** Do not use gas piping as an electrical ground. To confirm proper unit grounding, turn off the electrical power and perform the following check.

1. Measure resistance between the neutral (white) connection and one of the burners.
2. Resistance should measure 10 ohms or less. This furnace is equipped with a blower door interlock switch which interrupts unit voltage when the blower door is opened for servicing. Do not defeat this switch.

24 Volt Thermostat Wiring

NOTE: Wire routing must not interfere with circulator blower operation, filter removal, or routine maintenance.

Low voltage connections can be made through either the right or left side panel. Thermostat wiring entrance holes are located in the blower compartment. Wire routing must not to interfere with circulator blower operation, filter removal, or routine maintenance. Refer to the following figure for thermostat connections to the integrated control module terminal strip.

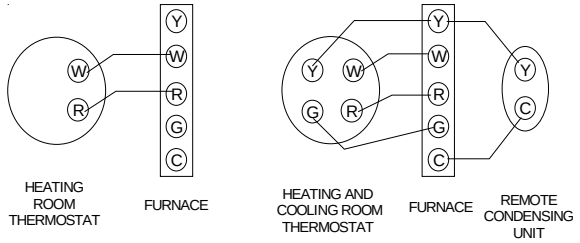

Thermostat Diagram

This furnace is equipped with a 40 VA transformer to facilitate use with most cooling equipment. Consult the wiring diagram, located on the blower compartment door, for further details of 115 Volt and 24 Volt wiring.

GME95/AMEH96 Furnace with 2-Stage Condenser Field Wiring

The GME95/AMEH96 model furnaces may be used with a 2-stage outdoor air conditioner. A two stage cooling/single stage gas heat thermostat is required, in addition to a field supplied relay. The relay must have a 24VAC coil and contacts rated for up to 1 horse power at 125VAC.

1. Install the field supplied relay on the control mounting panel near the furnace ignition control. The relay should be installed such that the motor leads will reach the relay contact terminals.
2. Connect the “Y2” (high stage cool) thermostat terminal to one coil terminal of the field supplied relay. Connect the other field supplied relay coil terminal to the “C” terminal on the furnace ignition control. Typical 18AWG thermostat wire may be used.
3. Connect the common terminal of the field supplied relay to the “LINE-H” terminal on the furnace ignition control. Use wiring having copper conductors only and a temperature rating of at least 105°C.
4. Using the GME95/AMEH96 airflow tables in this manual, determine the motor speed tap needed to deliver the required high stage cooling airflow. Connect the selected motor speed tap to the normally open terminal on the field supplied relay. Use wiring having copper conductors only and a temperature rating of at least 105°C.
5. See the following wiring schematic.

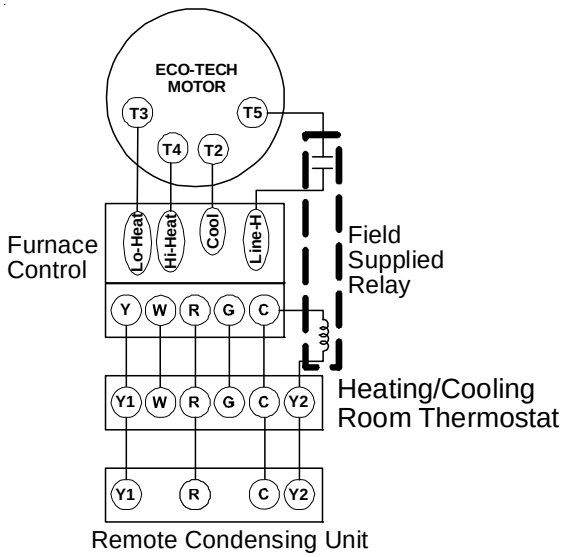

Field Wiring for GME95 /AMEH96 Furnacewith 2-Stage Condenser

115 Volt Line Connection of Accessories (Electronic Air Cleaner)

WARNING

HIGH VOLTAGE!
To avoid personal injury or death due to electrical shock, disconnect electrical power before servicing or changing any electrical wiring.

The furnace’s integrated control module is equipped with line voltage accessory terminals for controlling power to an optional field-supplied electronic air cleaner.
The accessory load specifications are as follows:

Electronic Air Cleaner	1.0 Amp maximum at 120 VAC

Turn OFF power to the furnace before installing any accessories. Follow the air cleaner manufacturers’ instructions for locating, mounting, grounding, and controlling these accessories. Accessory wiring connections are to be made through the 1/4" quick connect terminals provided on the furnace integrated control module. The electronic air cleaner hot terminal is identified as EAC-H. The electronic air cleaner neutral terminal is identified as LINE NEUTRAL. All field wiring must conform to applicable codes. Connections should be made as shown below.

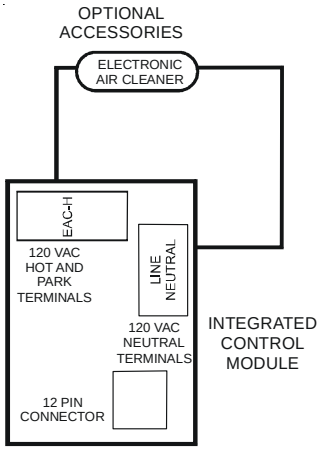

Accessories Wiring

If it is necessary for the installer to supply additional line voltage wiring to the inside of the furnace, the wiring must conform to all local codes, and have a minimum temperature rating of 105°C. All line voltage wire splices must be made inside the furnace junction box.
The integrated control module electronic air cleaner terminals (EAC) are energized with 115 volts whenever the circulator blower is energized.

24 Volt Humidifier

The yellow wire connected to the I.D. Blower pressure switch is powered anytime the pressure switch is closed and provides 24 VAC humidifier control. Remove the yellow wire and connect a field supplied jumper wire with a "piggyback" terminal to the pressure switch terminal. Reconnect the yellow wire to the "piggyback" terminal on the jumper wire and then connect the 24 VAC line of the humidifier to the stripped end of the jumper wire. Using a wire nut or a field-supplied quick connect terminal can make this connection. The wiring must conform to all local and national codes. Connect the COM side of the humidifier to the B/C terminal on the furnace control board (or to the COM side of the 24 VAC transformer). **DO NOT CONNECT 115V HUMIDIFIER TO THESE TERMINALS.**

XII. GAS SUPPLY AND PIPING

General

The furnace rating plate includes the approved furnace gas input rating and gas types. The furnace must be equipped to operate on the type of gas applied. This includes any conversion kits required for alternate fuels and/or high altitude.

CAUTION

To prevent unreliable operation or equipment damage, the Inlet gas supply pressure must be as specified on the unit rating plate with all other household gas fired appliances operating.

Inlet gas supply pressures must be maintained within the ranges specified below. The supply pressure must be constant and available with all other household gas fired appliances operating. The minimum gas supply pressure must be maintained to prevent unreliable ignition. The maximum must not be exceeded to prevent unit overfiring.

Inlet Gas Supply Pressure		
Natural Gas	Minimum: 4.5" w.c.	Maximum: 10.0" w.c.
Propane Gas	Minimum: 11.0" w.c.	Maximum: 13.0" w.c.

High Altitude Derate

When this furnace is installed at high altitude, the appropriate High Altitude orifice kit must be applied. This is required due to the natural reduction in the density of both the gas fuel and combustion air as altitude increases. The kit will provide the proper design certified input rate within the specified altitude range.
High altitude kits are purchased according to the installation altitude and usage of either natural or propane gas. Contact your distributor for a tabular listing of appropriate altitude ranges and corresponding manufacturer's high altitude (Natural, Propane Gas, and/or Pressure Switch) kits.
Do **not** derate the furnace by adjusting the manifold pressure to a lower pressure than specified on the furnace rating plate. The combination of the lower air density and a lower manifold pressure will prohibit the burner orifice from drawing the proper amount of air into the burner. This may cause incomplete combustion, flashback, and possible yellow tipping.
In some areas the gas supplier may artificially derate the gas in an effort to compensate for the effects of altitude. If the gas is artificially derated, the appropriate orifice size must be determined based upon the BTU/ft^3 content of the derated gas and the altitude. Refer to the National Fuel Gas Code, NFPA 54/ANSI Z223.1, and information provided by the gas supplier to determine the proper orifice size.
A different pressure switch may be required at high altitude regardless of the BTU/ft^3 content of the fuel used. Contact your distributor for a tabular listing of appropriate altitude ranges and corresponding manufacturer's pressure switch kits.

Propane Gas Conversion

WARNING

Possible property damage, personal injury or death may occur if the correct conversion kits are not installed. The appropriate kits must be applied to ensure safe and proper furnace operation. All conversions must be performed by a qualified installer or service agency.

This unit is configured for natural gas. The appropriate manufacturer's propane gas conversion kit, must be applied for propane gas installations. Refer to the *Section VIII, Propane Gas / High Altitude Installations* section for details.
Consult the furnace Specification Sheet for a listing of appropirate kits. The indicated kits must be used to insure safe and proper furnace operation. All conversions must be performed by a qualified installer or service agency.

Gas Valve

This unit is equipped with a 24 volt gas valve controlled during furnace operation by the integrated control module. As shipped, the valve is configured for natural gas. The valve is field convertible for use with propane gas by replacing the regulator spring with a propane gas spring from an appropriate manufacturer's propane gas conversion kit. Taps for measuring the gas supply pressure and manifold pressure are provided on the valve.
The gas valve has a manual ON/OFF control located on the valve itself. This control may be set only to the "ON" or "OFF" position. Refer to the lighting instructions label or *Section XIV, Startup Procedure & Adjustment* for use of this control during start up and shut down periods.

Gas Piping Connections

General

CAUTION

To avoid possible unsatisfactory operation or equipment damage due to underfiring of equipment, use the proper size of natural/propane gas piping needed when running pipe from the meter/tank to the furnace.

When sizing a trunk line, be sure to include all appliances which will operate simultaneously.
The gas piping supplying the furnace must be properly sized based on the gas flow required, specific gravity of the gas, and length of the run. The gas line installation must comply with local codes, or in their absence, with the latest edition of the National Fuel Gas Code, NFPA 54/ANSI Z223.1.

Natural Gas Capacity of Pipe
In Cubic Feet of Gas Per Hour (CFH)

Length of Pipe in Feet	Nominal Black Pipe Size				
	1/2"	3/4"	1"	1 1/4"	1 1/2"
10	132	278	520	1050	1600
20	92	190	350	730	1100
30	73	152	285	590	980
40	63	130	245	500	760
50	56	115	215	440	670
60	50	105	195	400	610
70	46	96	180	370	560
80	43	90	170	350	530
90	40	84	160	320	490
100	38	79	150	305	460

(Pressure 0.5 psig or less and pressure drop of 0.3" W.C.; Based on 0.60 Specific Gravity Gas)

$$\text{CFH} = \frac{\text{BTUH Furnace Input}}{\text{Heating Value of Gas (BTU/Cubic Foot)}}$$

To connect the furnace to the building's gas piping, the installer must supply a ground joint union, drip leg, manual shutoff valve, and line and fittings to connect to gas valve. In some cases, the installer may also need to supply a transition piece from 1/2" pipe to a larger pipe size. The following stipulations apply when connecting gas piping. Refer to *Gas Piping Connections* figure for typical gas line connections to the furnace.

- Gas piping must be supported external to the furnace cabinet so that the weight of the gas line does not distort the burner rack, manifold or gas valve.
- Use black iron or steel pipe and fittings for building piping. Where possible, use new pipe that is properly chamfered, reamed, and free of burrs and chips. If old pipe is used, be sure it is clean and free of rust, scale, burrs, chips, and old pipe joint compound.
- Use pipe joint compound on male threads ONLY. Always use pipe joint compound (pipe dope) that is APPROVED FOR ALL GASES. DO NOT apply compound to the first two threads.
- Use ground joint unions.
- Install a drip leg to trap dirt and moisture before it can enter the gas valve. The drip leg must be a minimum of three inches long.
- Install a 1/8" NPT pipe plug fitting, accessible for test gauge connection, immediately upstream of the gas supply connection to the furnace.
- Always use a back-up wrench when making the connection to the gas valve to keep it from turning. The orientation of the gas valve on the manifold must be maintained as shipped from the factory. Maximum torque for the gas valve connection is 375 in-lbs; excessive over-tightening may damage the gas valve.
- Install a manual shutoff valve between the gas meter and unit within six feet of the unit. If a union is installed, the union must be downstream of the manual shutoff valve, between the shutoff valve and the furnace.
- Tighten all joints securely.
- Connect the furnace to the building piping by one of the following methods:
  - Rigid metallic pipe and fittings.
  - Semi-rigid metallic tubing and metallic fittings. Aluminum alloy tubing must not be used in exterior locations. In order to seal the grommet cabinet penetration, rigid pipe must be used to reach the outside of the cabinet. A semi-rigid connector to the gas piping may be used from there.
- Use listed gas appliance connectors in accordance with their instructions. Connectors must be fully in the same room as the furnace.
- Protect connectors and semi-rigid tubing against physical and thermal damage when installed. Ensure aluminum-alloy tubing and connectors are coated to protect against external corrosion when in contact with masonry, plaster, or insulation, or subjected to repeated wetting by liquids such as water (except rain water), detergents, or sewage.

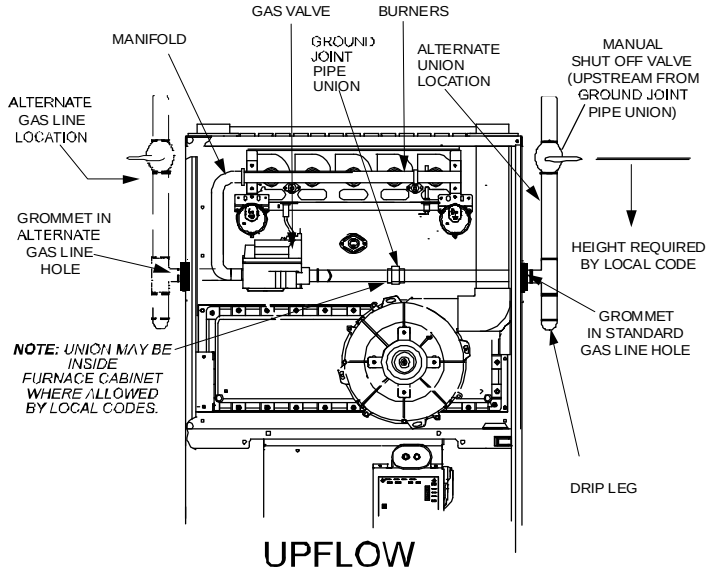

UPFLOW

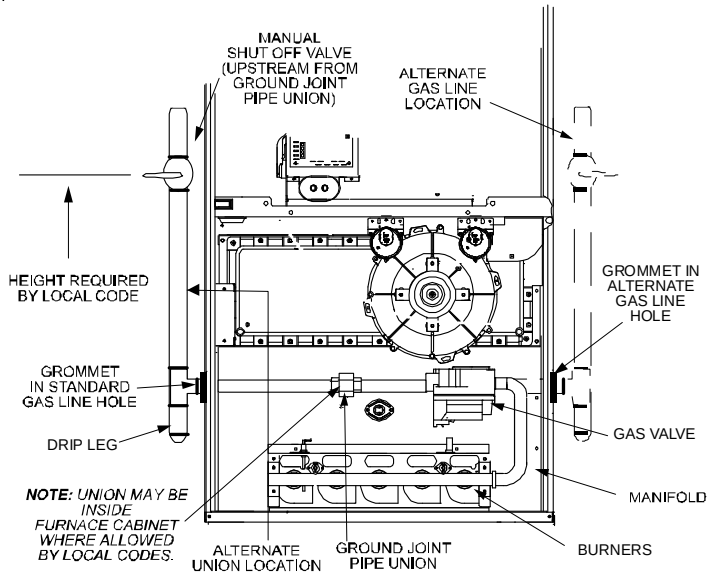

COUNTERFLOW

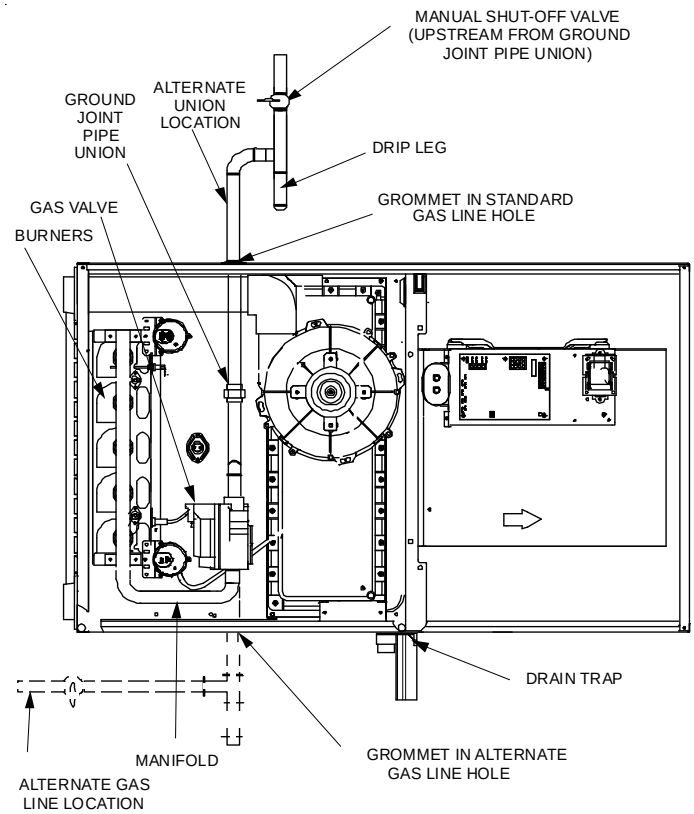

HORIZONTAL [UPFLOW MODEL]

NOTES:
1. WHEN GAS LINE IS IN THE ALTERNATE LOCATION, SWAP THE POSITION OF THE PLUG AND GROMMET.

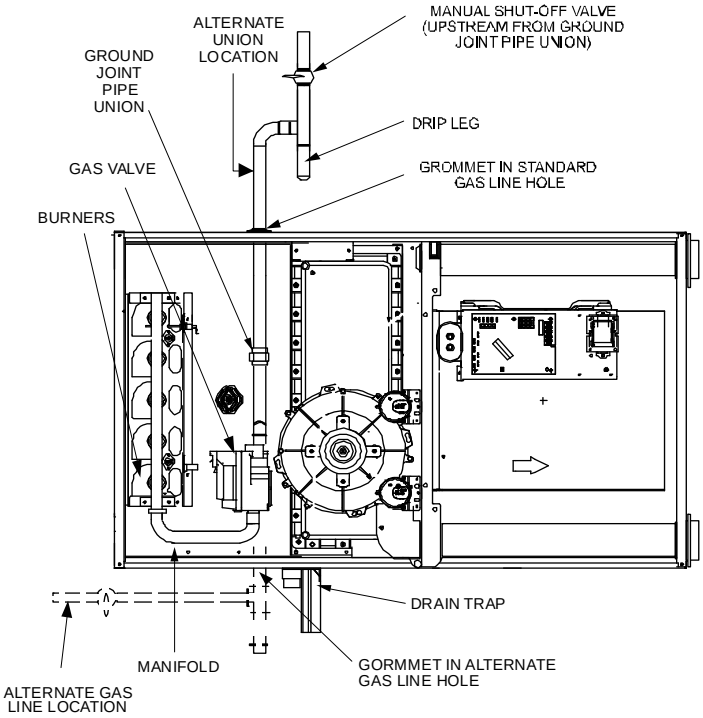

HORIZONTAL [COUNTERFLOW]

2. DRIP LEG MAY TERMINATE WITH A ½"X 1/8" PIPE PLUG TO ACCOMMODATE LINE GAS PRESSURE MEASUREMENT.

Gas Piping Connections

⚠ WARNING

EDGES OF SHEET METAL HOLES MAY BE SHARP. USE GLOVES AS A PRECAUTION WHEN REMOVING HOLE PLUGS.

DIRECT/STANDARD INLET PIPING

When gas piping enters *directly* to the gas valve through the *standard* inlet hole, the installer must supply straight pipe with a ground joint union to reach the exterior of the furnace. The rigid pipe must be long enough to reach the outside of the cabinet to seal the grommet cabinet penetration. A semi-rigid connector to the gas piping can be used outside the cabinet per local codes.

INDIRECT/ALTERNATE INLET PIPING

When gas piping enters *indirectly* to the gas valve through the *alternate* gas inlet hole, the following 1/2 inch pipe fittings (starting from the gas valve) to reach the outside of the cabinet must be supplied:

- (1) Close nipple
- (1) 90 degree street elbow
- (1) 2 1/2" pipe nipple
- (1) 90 degree elbow
- Straight Pipe
- The straight pipe must be long enough to reach the outside of the cabinet so as to seal the grommet cabinet penetration and to install the ground joint union outside the cabinet. A semi-rigid connector to the gas piping can be used outside the cabinet per local codes.

GAS PIPING CHECKS

Before placing unit in operation, leak test the unit and gas connections.

⚠ WARNING

TO AVOID THE POSSIBILITY OF EXPLOSION OR FIRE, NEVER USE A MATCH OR OPEN FLAME TO TEST FOR LEAKS.

Check for leaks using an approved chloride-free soap and water solution, an electronic combustible gas detector, or other approved testing methods.

NOTE: Never exceed specified pressures for testing. Higher pressure may damage the gas valve and cause subsequent overfiring, resulting in heat exchanger failure.

Disconnect this unit and shutoff valve from the gas supply piping system before pressure testing the supply piping system with pressures in excess of 1/2 psig (3.48 kPa).
Isolate this unit from the gas supply piping system by closing its external manual gas shutoff valve before pressure testing supply piping system with test pressures equal to or less than 1/2 psig (3.48 kPa).

Propane Gas Tanks and Piping

WARNING

If the gas furnace is installed in a basement, an excavated area or a confined space, it is strongly recommended to contact a propane supplier to install a gas detecting warning device in case of a gas leak.

- **Since propane gas is heavier than air, any leaking as can settle in any low areas or confined spaces.**
- **Propane gas odorant may fade, making the gas Undetectable except for with a warning device.**

A gas detecting warning system is the only reliable way to detect a propane gas leak. Rust can reduce the level of odorant in propane gas. Do not rely on your sense of smell. Contact a local propane gas supplier about installing a gas detecting warning system. If the presence of gas is suspected, follow the instructions on Page 4 of this manual.

All propane gas equipment must conform to the safety standards of the National Board of Fire Underwriters, NBFU Manual 58.

For satisfactory operation, propane gas pressure must be 11 inch w.c. at the furnace manifold with all gas appliances in operation. Maintaining proper gas pressure depends on three main factors:

1. Vaporization rate, depending on temperature of the liquid, and "wetted surface" area of the container or containers.
2. Proper pressure regulation. (Two-stage regulation is recommended for both cost and efficiency).
3. Pressure drop in lines between regulators, and between second stage regulator and the appliance. Pipe size will depend on length of pipe run and total load of all appliances.

Complete information regarding tank sizing for vaporization, recommended regulator settings, and pipe sizing is available from most regulator manufacturers and propane gas suppliers.

Since propane gas will quickly dissolve white lead and most standard commercial compounds, special pipe dope must be used. Shellac-based compounds resistant to the actions of liquefied petroleum gases such as Gasolac®, Stalactic®, Clyde's® or John Crane® are satisfactory.

Refer to the following illustration for typical propane gas installations.

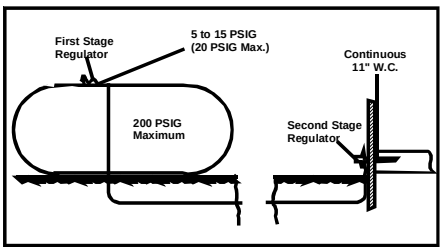

Propane Gas Installation (Typ.)

Sizing Between First and Second Stage Regulator*

Maximum Propane Capacities listed are based on 2 psig pressure drop at 10 psig setting. Capacities in 1,000 BTU/hour.

Pipe or Tubing Length, Feet	Tubing Size, O.D. Type L					Nominal Pipe Size Schedule 40	
	3/8"	1/2"	5/8"	3/4"	7/8"	1/2"	3/4"
10	730	1,700	3,200	5,300	8,300	3,200	7,500
20	500	1,100	2,200	3,700	5,800	2,200	4,200
30	400	920	2,000	2,900	4,700	1,800	4,000
40	370	850	1,700	2,700	4,100	1,600	3,700
50	330	770	1,500	2,400	3,700	1,500	3,400
60	300	700	1,300	2,200	3,300	1,300	3,100
80	260	610	1,200	1,900	2,900	1,200	2,600
100	220	540	1,000	1,700	2,600	1,000	2,300
125	200	490	900	1,400	2,300	900	2,100
150	190	430	830	1,300	2,100	830	1,900
175	170	400	780	1,200	1,900	770	1,700
200	160	380	730	1,100	1,800	720	1,500

To convert to capacities at 15 psig settings - multiply by 1.130
To convert to capacities at 5 psig settings - multiply by 0.879

Propane Gas Piping Chart I

Sizing Between Single or Second Stage Regulator and Appliance*

Maximum Propane Capacities Listed are Based on 1/2" W.C. pressure drop at 11" W.C. setting. Capacities in 1,000 BTU/hour.

Pipe or Tubing Length, Feet	Tubing Size, O.D. Type L						Nominal Pipe Size Schedule 40				
	3/8"	1/2"	5/8"	3/4"	7/8"	1-1/8"	1/2"	3/4"	1"	1-1/4"	1-1/2"
10	39	92	199	329	501	935	275	567	1,071	2,205	3,307
20	26	62	131	216	346	630	189	393	732	1,496	2,299
30	21	50	107	181	277	500	152	315	590	1,212	1,858
40	19	41	90	145	233	427	129	267	504	1,039	1,559
50	18	37	79	131	198	376	114	237	448	913	1,417
60	16	35	72	121	187	340	103	217	409	834	1,275
80	13	29	62	104	155	289	89	185	346	724	1,066
100	11	26	55	90	138	255	78	162	307	630	976
125	10	24	48	81	122	224	69	146	275	567	866
150	9	21	43	72	109	202	63	132	252	511	787
200	8	19	39	66	100	187	54	112	209	439	665
250	8	17	36	60	93	172	48	100	185	390	590

*Data in accordance with NFPA pamphlet NO. 54

Propane Gas Piping Chart II

XIII. CIRCULATING AIR & FILTERS

Ductwork - Air Flow

WARNING

Never allow the products of combustion, including carbon Monoxide, to enter the return duct work or circulation Air supply.

Duct systems and register sizes must be properly designed for the CFM and external static pressure rating of the furnace. Design the ductwork in accordance with the recommended methods of "Air Conditioning Contractors of America" Manual D.

Install the duct system in accordance with Standards of the National Board of Fire Underwriters for the Installation of Air Conditioning, Warm Air Heating and Ventilating Systems. Pamphlets No. 90A and 90B.

A closed return duct system must be used, with the return duct connected to the furnace. **NOTE:** Ductwork must never be attached to the back of the furnace. Flexible joints may be used for supply and return connections to reduce noise transmission. To prevent the blower from interfering with combustion air or draft when a central return is used, a connecting duct must be installed between the unit and the utility room wall. Never us a room, closet, or alcove as a return air chamber.

When the furnace is used in connection with a cooling unit, the furnace should be installed in parallel with or on the upstream side of the cooling unit to avoid condensation in the heating element. With a parallel flow arrangement, the dampers or other means used to control the flow of air must be adequate to prevent chilled air from entering the furnace and, if manually operated, must be equipped with means to prevent operation of either unit unless the damper is in the full heat or cool position.

When the furnace is installed without a cooling coil, it is recommended that a removable access panel be provided in the outlet air duct. This opening shall be accessible when the furnace is installed and shall be of such a size that the heat exchanger can be viewed for visual light inspection or such that a sampling probe can be inserted into the airstream. The access panel must be made to prevent air leaks when the furnace is in operation.

When the furnace is heating, the temperature of the return air entering the furnace must be between 55°F and 100°F.

Checking Duct Static

Refer to your furnace rating plate for the maximum ESP (external duct static) rating.

Total external static refers to everything external to the furnace cabinet. Cooling coils, filters, ducts, grilles, registers must all be considered when reading your total external static pressure. The supply duct pressure must be read between the furnace and the cooling coil. This reading is usually taken by removing the “A” shaped block off plate from the end on the coil; drilling a test hole in it and reinstalling the block off plate. Take a duct static reading at the test hole. Tape up the test hole after your test is complete. The negative pressure must be read between the filter and the furnace blower.

Too much external static pressure will result in insufficient air that can cause excessive temperature rise. This can cause limit switch tripping and heat exchanger failure.

To determine total external duct static pressure, proceed as follows;

1. With clean filters in the furnace, use a draft gauge (inclined manometer) to measure the static pressure of the return duct at the inlet of the furnace. (Negative Pressure)
2. Measure the static pressure of the supply duct. (Positive Pressure)
3. The difference between the two numbers is .4” w.c.

Example:
static reading from return duct = -.1" w.c.
static reading from supply duct = .3" w.c.
total external static pressure on this system = .4" w.c.

NOTE: Both readings may be taken simultaneously and read directly on the manometer if so desired. If an air conditioner coil or Electronic Air Cleaner is used in conjunction with the furnace, the readings must also include theses components, as shown in the following drawing.

4. Consult proper tables for the quantity of air. If the total external static pressure exceeds the maximum listed on the furnace rating plate, check for closed dampers, registers, undersized and/or oversized poorly laid out duct work.

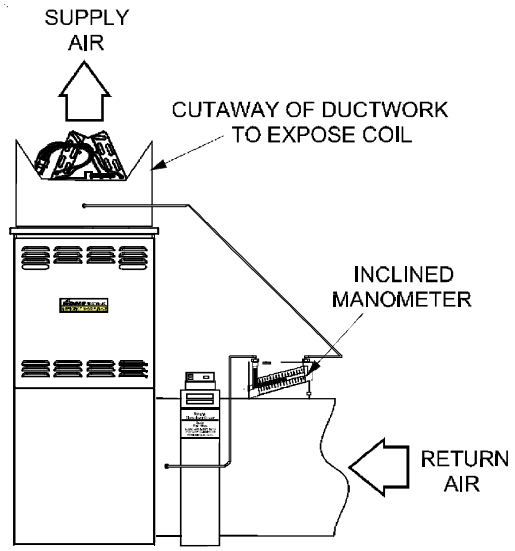

Checking Static Pressure
(80% Furnace Shown, 90% Similar)

Bottom Return Air Opening [Upflow Models]

The bottom return air opening on upflow models utilizes a “lance and cut” method to remove sheet metal from the duct opening in the base pan. To remove, simply press out the lanced sections by hand to expose the metal strips retaining the sheet metal over the duct opening. Using tin snips, cut the metal strips and remove the sheet metal to free the duct flanges. Using the scribe line along the duct flange as a guide, unfold the duct flanges around the perimeter of the opening using a pair of seamer pliers or seamer tongs. **NOTE:** Airflow area will be reduced by approximately 18% if duct flanges are not unfolded. This could cause performance issues and noise issues.

⚠ WARNING

Edges of sheet metal holes may be sharp. Use gloves as a precaution when removing hole plugs.

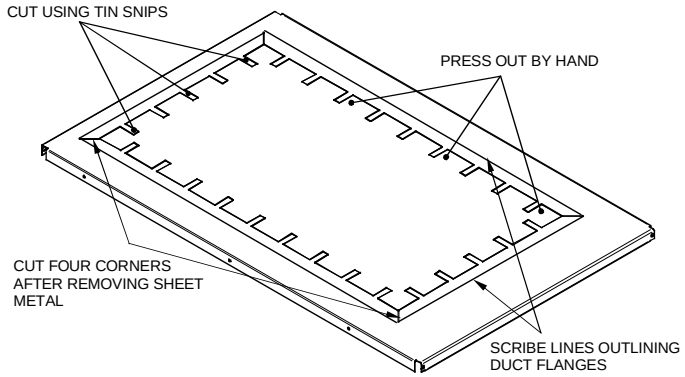

Duct Flange Cut Outs

When the furnace is used in connection with a cooling unit, the furnace should be installed in parallel with or on the upstream side of the cooling unit to avoid condensation in the heating element. With a parallel flow arrangement, the dampers or other means used to control the flow of air must be adequate to prevent chilled air from entering the furnace and, if manually operated, must be equipped with means to prevent operation of either unit unless the damper is in the full heat or cool position. When the furnace is installed without a cooling coil, it is recommended that a removable access panel be provided in the outlet air duct. This opening shall be accessible when the furnace is installed and shall be of such a size that the heat exchanger can be viewed for visual light inspection or such that a sampling probe can be inserted into the air stream. The access panel must be made to prevent air leaks when the furnace is in operation. When the furnace is heating, the temperature of the return air entering the furnace must be between 55°F and 100°F.

Filters - Read This Section Before Installing The Return Air Ductwork

Filters must be used with this furnace. Discuss filter maintenance with the building owner. Filters do not ship with this furnace, but must be provided by the installer. Filters must comply with UL900 or CAN/ULCS111 standards. If the furnace is installed without filters, the warranty will be voided.

On upflow units, guide dimples locate the side return cutout locations. Use a straight edge to scribe lines connecting the dimples. Cut out the opening on these lines.

NOTE: An undersized opening will cause reduced airflow.

Refer to Minimum Filter Area tables to determine filter area requirements.

		COOLING AIRFLOW REQUIREMENT (CFM)						
		600	800	1000	1200	1400	1600	2000
Input_Airflow	040_3BXA 0453BXA	194*	194*	240	288	---	---	---
	060_3BXA 0703BXA	---	324*	324*	324*	336	---	---
	0704CXA	---	---	291*	291*	336	384	---
	0904CXA	---	---	432*	432*	432*	432*	---
	080_5CXA 0905DXA	---	---	---	388*	388*	388*	480
	100_5DXA 1155DXA	---	---	---	486*	486*	486*	486*

*Minimum filter area dictated by heating airflow requirement.

Permanent Minimum Filter Area (sq. in)

[Based on a 600 ft/min filter face velocity]

		COOLING AIRFLOW REQUIREMENT (CFM)						
		600	800	1000	1200	1400	1600	2000
Input_Airflow	040_3BXA 0453BXA	388*	388*	480	576	---	---	---
	060_3BXA 0703BXA	---	647*	647*	647*	672	---	---
	0704CXA			583*	583*	672	768	
	0904CXA	---	---	863*	863*	863*	863*	---
	080_5CXA 0905DXA	---	---	---	777*	777*	777*	960
	100_5DXA 1155DXA	---	---	---	971*	971*	971*	971*

*Minimum filter area dictated by heating airflow requirement.

Disposable Minimum Filter area (sq. in)

[Based on 300 ft/min filter face velocity]

Upright Installations

Depending on the installation and/or customer preference, differing filter arrangements can be applied. Filters can be installed in the central return register or a side panel external filter rack kit (upflows). As an alternative a media air filter or electronic air cleaner can be used as the requested filter.

The following figure shows possible filter locations.

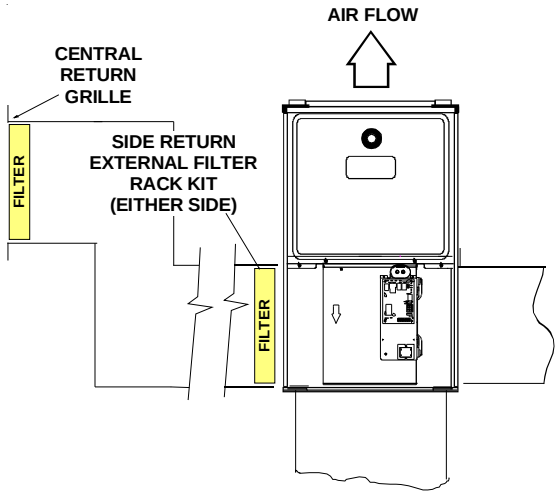

Possible Upright Upflow

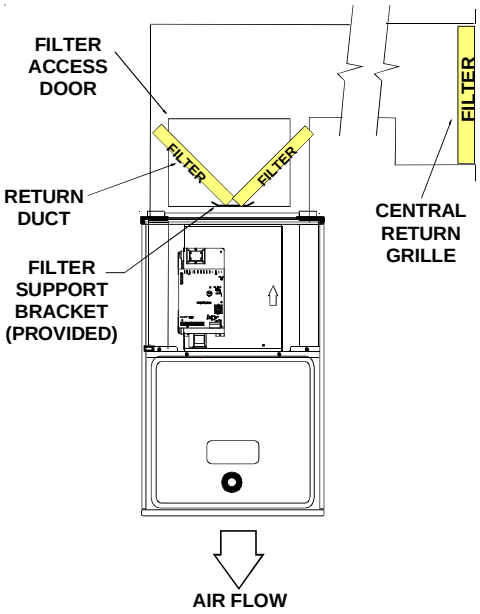

Possible Upright Counterflow

Filter Locations

NOTE: Internal filter retention is not provided on this furnace.

Horizontal Installations

Filters must be installed in either the central return register or in the return air duct work.

XIV. STARTUP PROCEDURE & ADJUSTMENT

Furnace must have a 115 VAC power supply properly connected and grounded. Proper polarity must be maintained for correct operation. In addition to the following start-up and adjustment items, refer to further information in *Section XVI, Operational Checks*.

Heat Anticipator Setting

The heat anticipator in the room thermostat must be correctly adjusted to obtain the proper number of cycles per hour and to prevent “overshooting” of the setting. Set the heat anticipator setting to 0.7 amps. Follow the thermostat manufacturer’s instructions on how to adjust the heat anticipator setting.

Drain Trap Priming

The drain trap must be primed prior to furnace startup. To prime, fill the drain trap with water. This ensures proper furnace drainage upon startup and prohibits the possibility of flue gases escaping through the drain system. Air conditioning condensate may be drained into the furnace trap.

Furnace Operation

Purge gas lines of air prior to startup. Be sure not to purge lines into an enclosed burner compartment. Follow NFPA 54, National Fuel Gas Code 8.3 for proper purging methods. In Canada, follow approved purging methods in B149.1

Check for leaks using an approved chloride-free soap and water solution, an electronic combustible gas detector, or other approved method. Verify that all required kits (propane gas, high altitude, etc.) have been appropriately installed.

Furnace Startup

1. Close the manual gas shutoff valve external to the furnace.
2. Turn off the electrical power to the furnace.
3. Set the room thermostat to the lowest possible setting.
4. Remove the burner compartment door.

NOTE: This furnace is equipped with an ignition device which automatically lights the burner. Do not try to light the burner by hand.

5. Move the furnace gas valve manual control to the OFF position.
6. Wait five minutes then smell for gas. Be sure to check near the floor as some types of gas are heavier than air.
7. If you smell gas after five minutes, immediately follow the instructions on page 4 of this manual. If you do not smell gas after five minutes, move the furnace gas valve manual control to the ON position.
8. Replace the burner compartment door.
9. Open the manual gas shutoff valve external to the furnace.
10. Turn on the electrical power to the furnace.
11. Adjust the thermostat to a setting above room temperature.
12. After the burners are lit, set the thermostat to desired temperature.

Furnace Shutdown

1. Set the thermostat to the lowest setting. The integrated control will close the gas valve and extinguish flame. Following a 15 second delay, the induced draft blower will be de-energized. After a 100 or 150 second delay period (field selectable), the circulator blower will be de-energized.
2. Remove the burner compartment door and move the furnace gas valve manual control to the OFF position.
3. Close the manual gas shutoff valve external to the furnace.
4. Replace the burner compartment door.

Gas Supply Pressure Measurement

CAUTION

To prevent unreliable operation or equipment damage, the Inlet gas supply pressure must be as specified on the unit rating plate with all other household gas fired appliances operating.

The line pressure supplied to the gas valve must be within the range specified in the *Inlet Gas Supply Pressure* table. The supply pressure can be measured at the gas valve inlet pressure tap or at a hose fitting installed in the gas piping drip leg. The supply pressure must be measured with the burners operating. To measure the gas supply pressure, use the following procedure.

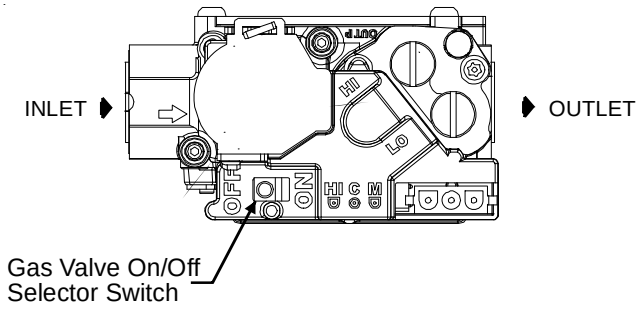

White-Rodgers Model 36G54 (Two-Stage)

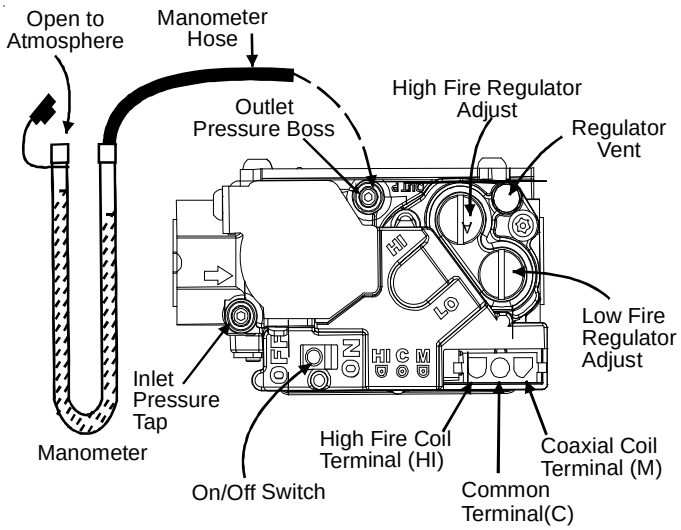

White-Rodgers Model 36G54 Connected to Manometer

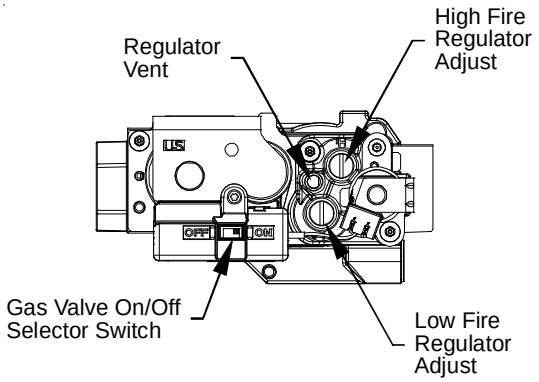

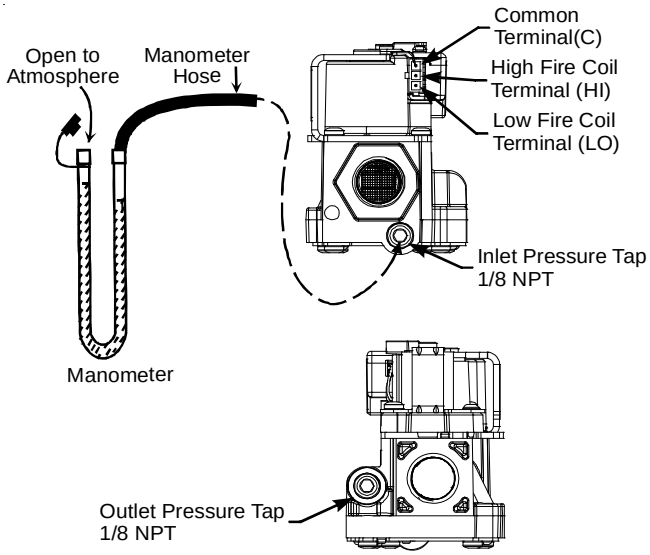

Honeywell Model VR9205 Connected to Manometer

1. Turn OFF gas to furnace at the manual gas shutoff valve external to the furnace.
2. Connect a calibrated water manometer (or appropriate gas pressure gauge) at either the gas valve inlet pressure tap or the gas piping drip leg. See Honeywell VR9205 gas valve figure or White-Rodgers 36G54 gas valve figure for location of inlet pressure tap.

NOTE: If measuring gas pressure at the drip leg or Honeywell VR9205 gas valve, a field-supplied hose barb fitting must be installed prior to making the hose connection. If using the inlet pressure tap on the White-Rodgers 36G54 gas valve, then use the 36G Valve Pressure Check Kit, Goodman Part No. 0151K00000S.

3. Turn ON the gas supply and operate the furnace and all other gas consuming appliances on the same gas supply line.
4. Measure furnace gas supply pressure with burners firing. Supply pressure must be within the range specified in the *Inlet Gas Supply Pressure* table.

Inlet Gas Supply Pressure		
Natural Gas	Minimum: 4.5" w.c.	Maximum: 10.0" w.c.
Propane Gas	Minimum: 11.0" w.c.	Maximum: 13.0" w.c.

If supply pressure differs from table, make the necessary adjustments to pressure regulator, gas piping size, etc., and/or consult with local gas utility.

5. Turn OFF gas to furnace at the manual shutoff valve and disconnect manometer. Reinstall plug before turning on gas to furnace.
6. Turn OFF any unnecessary gas appliances stated in step 3.

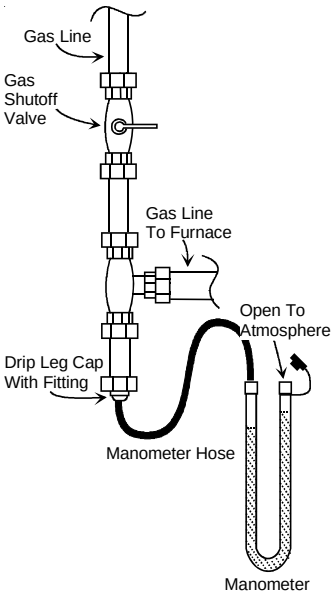

Measuring Inlet Gas Pressure (Alt. Method)

Gas Manifold Pressure Measurement and Adjustment

CAUTION

To prevent unreliable operation or equipment damage, the gas manifold pressure must be as specified on the unit rating plate. Only minor adjustments should be made by adjusting the gas valve pressure regulator.

Only small variations in gas pressure should be made by adjusting the gas valve pressure regulator. The manifold pressure must be measured with the burners operating. To measure and adjust the manifold pressure, use the following procedure.

1. Turn OFF gas to furnace at the manual gas shutoff valve external to the furnace.
2. Turn off all electrical power to the system.
3. Outlet pressure tap connections:
   a. Honeywell VR9205 valve: Remove the outlet pressure tap plug. Install an 1/8" NPT hose barb fitting into the outlet pressure tap.
   b. White-Rodgers 36G54 valve: Back outlet pressure test screw (inlet/outlet pressure tap) out one turn (counterclockwise, not more than one turn).
4. Attach a hose and manometer to the outlet pressure barb fitting (Honeywell valve) or outlet pressure tap (White-Rodgers valve).
5. Turn ON the gas supply.
6. Turn on power and close thermostat "R" and "W1" contacts to provide a call for low stage heat.
7. Measure the gas manifold pressure with burners firing. Adjust manifold pressure using the *Manifold Gas Pressure* table shown below.
8. Remove regulator cover screw from the low (LO) outlet pressure regulator adjust tower and turn screw clockwise to increase pressure or counterclockwise to decrease pressure. Replace regulator cover screw.
9. Close thermostat "R" and "W2" contacts to provide a call for high stage heat.
10. Remove regulator cover screw from the high (HI) outlet pressure regulator adjust tower and turn screw clockwise to increase pressure or counterclockwise to decrease pressure. Replace regulator cover screw.
11. Turn off all electrical power and gas supply to the system.
12. Remove the manometer hose from the hose barb fitting or outlet pressure tap.
13. Replace outlet pressure tap:
    a. Honeywell VR9205 valve: Remove the 1/8" NPT hose barb fitting from the outlet pressure tap. Replace the outlet pressure tap plug and seal with a high quality thread sealer.
    b. White-Rodgers 36G54 valve: Turn outlet pressure test screw in to seal pressure port (clockwise, 7 in-lb minimum).
14. Turn on electrical power and gas supply to the system.
15. Close thermostat contacts "R" and "W1/W2" to energize the valve.

Using a leak detection solution or soap suds, check for leaks at outlet pressure boss plug (Honeywell valve) or screw (White-Rodgers valve). Bubbles forming indicate a leak. SHUT OFF GAS AND REPAIR ALL LEAKS IMMEDIATELY!

NOTE: For gas to gas conversion, consult your dealer for appropriate conversion.

Manifold Gas Pressure			
Gas	**Rate**	**Range**	**Nominal**
Natural	Low Stage	1.7 to 2.3" w.c.	2.0" w.c.
	High Stage	3.2 to 3.8" w.c.	3.5" w.c.
Propane	Low Stage	5.7 to 6.3" w.c.	6.0" w.c.
	High Stage	9.7 to 10.3" w.c.	10.0" w.c.

Gas Input Rate Measurement (Natural Gas Only)

The gas input rate to the furnace must never be greater than that specified on the unit rating plate. To measure natural gas input using the gas meter, use the following procedure.

1. Turn OFF the gas supply to all other gas-burning appliances except the furnace.
2. While the furnace is operating, time and record one complete revolution of the smallest gas meter dial.

3. Calculate the number of seconds per cubic foot (sec/ ft^3) of gas being delivered to the furnace. If the dial is a one cubic foot dial, divide the number of seconds recorded in step 2 by one. If the dial is a two cubic foot dial, divide the number of seconds recorded in step 2 by two.
4. Calculate the furnace input in BTUs per hour (BTU/ hr). Input equals the installation's gas heating value multiplied by a conversion factor (hours to seconds), divided by the number of seconds per cubic foot. The measured input must not be greater than the input indicated on the unit rating plate.

   EXAMPLE:

   Installation's gas heating (HTG) value: 1,000 BTU/ft^3 (Obtained from gas supplier)

   Installation's seconds per cubic foot: 34 sec/ ft^3

   Conversion Factor (hours to seconds): 3600 sec/hr

   Input = (Htg. value x 3600) ÷ seconds per cubic foot

   Input = (1,000 BTU/ft^3 x 3600 sec/hr) ÷ 34 sec/ ft^3

   Input = 106,000 BTU/hr

   This measured input must not be greater than the input indicated on the unit rating plate.
5. Turn ON gas and relight appliances turned off in step 1. Ensure all the appliances are functioning properly and that all pilot burners are operating.

Temperature Rise

Temperature rise must be within the range specified on the unit rating plate. An incorrect temperature rise may result in condensing in or overheating of the heat exchanger. An airflow and temperature rise table is provided in the Specification Sheet applicable to your model.

Determine and adjust temperature rise as follows:

1. Operate furnace with burners firing for approximately ten minutes. Ensure all registers are open and all duct dampers are in their final (fully or partially open) position.
2. Place thermometers in the return and supply ducts as close to the furnace as possible. Thermometers must not be influenced by radiant heat by being able to "see" the heat exchanger.

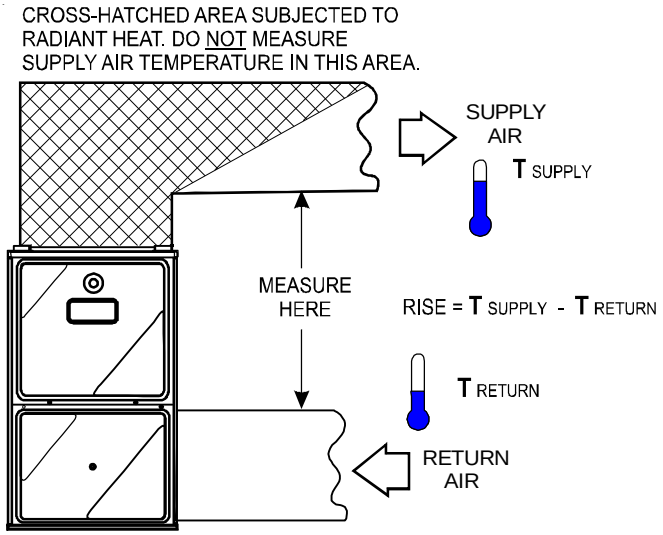

Temperature Rise Measurement

3. Subtract the return air temperature from the supply air temperature to determine the air temperature rise. Allow adequate time for thermometer readings to stabilize.
4. Adjust temperature rise by adjusting the circulator blower speed. Increase blower speed to reduce temperature rise. Decrease blower speed to increase temperature rise. Refer to *Startup Procedure and Adjustment -Circulator Blower Speeds* for speed changing details.

Circulator Blower Speeds

WARNING

To prevent premature failure of heat exchanger, property damage, personal injury or death, do not adjust the limit control (factory-set).

This furnace is equipped with a multi-speed circulator blower. This blower provides ease in adjusting blower speeds. The Specification Sheet applicable to your model provides an airflow table, showing the relationship between airflow (CFM) and external static pressure (E.S.P.), for the proper selection of heating and cooling speeds. The cooling blower speed is shipped set on HIGH, and the heating blower speed is set as indicated in the Specification Sheet applicable to your model. These blower speeds should be adjusted by the installer to match the installation requirements so as to provide the correct heating temperature rise and correct cooling CFM.

To adjust the circulator blower speed, proceed as follows:

1. Turn OFF power to the furnace.
2. Select the heating and cooling blower speeds that match the installation requirements from the *airflow table in the Specification Sheet*.
3. Relocate desired motor leads to the circulator blower heat and cool speed terminals on the integrated control module. (Terminals are identified as LO HEAT-H, HI HEAT-H and COOL-H (hot)). If a heating speed and the cooling blower speed are the same, a jumper wire must be used between the heat and cool terminals.
4. Connect all unused blower motor leads to the "PARK" terminals on the integrated control module. Any leads not connected to the "PARK" terminals must be taped.
5. Turn ON power to furnace.
6. Verify proper temperature rise as outlined in *Section XIV, Startup Procedure and Adjustment - Temperature Rise*.

*MH95, ACSH96, GCH95, GCH9 Circulator Blower Speeds	
LOW	RED
MEDIUM LOW	ORANGE
MEDIUM LOW	BLUE
HIGH	BLACK
COMMON/NEUTRAL	WHITE

AMEH96, GME95 Circulator Blower Speeds	
T1-LOW	YELLOW
T2-MED-LOW	RED
T3-MED	ORANGE
T4-MED-HI	BLUE
T5-HI	BLACK
COMMON\NEUTRAL	WHITE

Circulator Blower Fan Timing Adjustment

NOTE: Items in this section refer to the **air circulator blower fan** NOT to the induced draft blower. The induced draft blower timing sequence is not adjustable. The circulator blower fan timing is adjustable only on models with optional "heating fan OFF delay" adjustment pins or switches. It is NOT adjustable in any other circumstances.

As shipped, the circulator blower fan will remain on for 150 seconds after the gas valve closes. When a call for cooling occurs, the circulator fan comes on and remains on for 45 seconds after the call for cooling ends. During normal heating operation, the circulator fan will come on approximately 34 seconds after the gas valve opens.

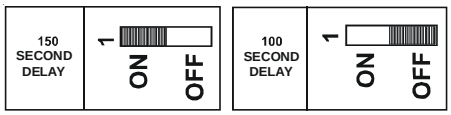

Switch viewed in an upflow installation.

Adjustment Switch

Setting Furnace Operating Mode

This furnace is designed to operate with either a single gas input rate or with two distinct gas input rates. The Mode DIP switch is used to select the single gas input rate or two distinct input rates.

Setting the Mode switch to "1 STG" forces the furnace to operate at the furnace's highest input rate only. Operation is as described under *Sequence of Operation (Integrated Ignition Control) – Mode DIP Switch is set to "1 STG" position*.

Setting the Mode switch to "2 STG" allows the furnace to operate at the furnace's highest input AND at an input rate that is 75% of the highest input rate. For this mode of operation, the furnace operates at the low input rate for a pre-determined time period then steps to the high input rate. Operation is as described under *Sequence of Operation (Integrated Ignition Control) – Mode DIP Switch is set to "2 STG" position*.

The time period is determined by the 2nd Stg Dly DIP switch. Setting the 2nd Stg Dly DIP switch to 5 minutes fixes the delay period at 5 minutes. Setting the 2nd Stg Dly DIP switch to Auto enables an algorithm that calculates a delay period based on the heating cycle time and the total cycle time. The delay period can range from 1 minute to 12 minutes.

NOTE: The ACSH, AMH, AMEH, GCH, GDH, GMH and GME hybrid furnaces require a single stage thermostat. These furnaces utilize a control board with single stage or two stage capability. The second stage feature is established by setting dip switch #2 on the board, either one stage or two stage. All of the second stage timing is then controlled by dipswitch 3 on the circuit board.

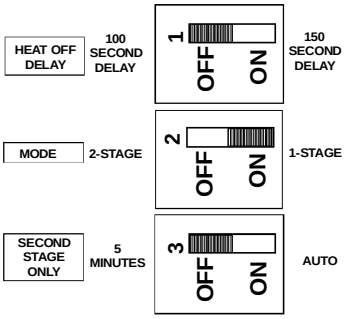

XV. NORMAL SEQUENCE OF OPERATION

Power Up

The normal power up sequence is as follows:

- 115 VAC power applied to furnace.
- Integrated control module performs internal checks.
- Integrated control module LED will light.
- Integrated control module monitors safety circuits continuously.
- Furnace awaits call from thermostat.

Heating Mode

(Mode DIP switch is set to "1 STG" position)

The normal operational sequence in heating mode is as follows:

- R and W thermostat contacts close, initiating a call for heat.
- Integrated control module performs safety circuit checks.
- Induced draft blower is energized for 15 second pre-purge period causing pressure switch contacts to close.
- Igniter warm up begins after 15 second prepurge expires.
- Low and high stage gas valves open at end of igniter warm up period, delivering gas to burners and establishing flame.
- Integrated control module monitors flame presence. Gas valve will remain open only if flame is detected.
- Circulator blower is energized on high heat speed following a fixed thirty second blower on delay. Electronic air cleaner terminals are energized with circulator blower.
- Furnace operates; integrated control module monitors safety circuits continuously.
- R and W thermostat contacts open, completing the call for heat.
- Gas valve closes, extinguishing flame.
- Induced draft blower is de-energized following a fifteen second post purge.
- The circulator blower remains at high heat speed for thirty seconds. The circulator blower then switches to low heat speed for the remainder of the selected heat off delay period. For example, the selected heat off delay period is 150 seconds. The circulator blower operates at high heat for 30 seconds and at low speed for 150 - 30 = 120 seconds.

(Mode DIP Switch is set to "2 STG" position)

The normal operational sequence in sequence is as follows:

- R and W thermostat contacts close, initiating a call for heat.
- Integrated control module performs safety circuit checks.
- Induced draft blower is energized for 15 second prepurge period causing pressure switch contacts to close.
- Igniter warm up begins after 15 second prepurge expires.
- Low and high-stage gas valves open at end of igniter warm up period, delivering gas to burners and establishing flame.
- High-stage gas valve closes after five seconds; low-stage gas valve remains open.
- Integrated control module monitors flame presence. Gas valve will remain open only if flame is detected.
- Circulator blower is energized on low heat speed following a fixed thirty second blower on delay. Electronic air cleaner terminals are energized with circulator blower.
- Furnace is now operating in low-stage heating mode.
- Furnace operates; integrated control module monitors safety circuits continuously.
- If low-stage delay period expires, control will shift operation from low-stage heating mode operation to high-stage heating mode operation. Control will energize circulator blower high heat speed and high stage gas valve.
- Furnace is now operating in high-stage heating mode.
- R and W thermostat contacts open, completing the call for heat.
- Induced draft blower is de-energized following a fifteen second post purge.
- Circulator blower is de-energized following a heat off delay period (selectable 100 or 150 seconds; factory set at 150 seconds).

  If the furnace is operating in the low-stage heating mode when thermostat contacts open, circulator remains at low heat speed for the selected delay off period.

  If the furnace is operating in high-stage heating mode when the thermostat contacts open, the circulator blower remains at high heat speed for thirty seconds. The circulator blower then switches to low heat speed for the remainder of the selected heat off delay period. For example, the selected heat off delay period is 150 seconds. The circulator blower operates at high heat for 30 seconds and at low speed for 150 - 30 = 120 seconds.
- Furnace awaits the next call from thermostat.

Cooling Mode

The normal operational sequence in cooling mode is as follows:

- R and Y thermostat contacts close, initiating a call for cool.
- Integrated control module performs safety circuit checks.
- Outdoor fan and compressor are energized.
- Circulator blower is energized on cool speed following a fixed five second on delay. Electronic air cleaner terminals are energized with circulator blower.
- Furnace circulator blower and outdoor cooling unit run, integrated control module monitors safety circuits continuously.
- R and Y thermostat contact open, completing the call for cool.
- Outdoor fan and compressor are de-energized.
- Circulator blower is de-energized following a fixed forty five second cool off delay period. Electronic air cleaner terminals are de-energized.
- Furnace awaits the next call from thermostat.

Fan Only Mode

The normal operational sequence in fan only mode is as follows:

- R and G thermostat contacts close, initiating a call for fan.
- Integrated control module performs safety circuit checks.
- Circulator blower is energized on low heat speed. Electronic air cleaner terminals are energized.
- Circulator blower runs, integrated control module monitors safety circuits continuously.
- R and G thermostat contacts open, completing the call for fan.
- Circulator blower is de-energized. Electronic air cleaner terminals are de-energized.
- Furnace awaits the next call from thermostat.

XVI. OPERATIONAL CHECKS

Burner Flame

The burner flames should be inspected with the burner compartment door installed. A sight glass is provided for inspection purposes. Flames should be stable, quiet, soft, and blue (dust may cause orange tips but they must not be yellow). Flames should extend directly outward from the burners without curling, floating, or lifting off. Flames must not impinge on the sides of the heat exchanger firing tubes.

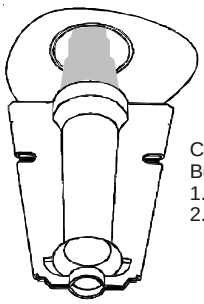

Check the
Burner Flames for:
1. Stable, soft and blue.
2. Not curling, floating or lifting off.

Burner Flame

XVII. SAFETY CIRCUIT DESCRIPTION

General

A number of safety circuits are employed to ensure safe and proper furnace operation. These circuits serve to control any potential safety hazards and serve as inputs in the monitoring and diagnosis of abnormal function. These circuits are continuously monitored during furnace operation by the integrated control module.

Integrated Control Module

The integrated control module is an electronic device which, if a potential safety concern is detected, the module will take the necessary precautions and provide diagnostic information through an LED.

Primary Limit

The primary limit control is located on the partition panel and monitors heat exchanger compartment temperatures. It is a normally-closed (electrically), automatic reset, temperature-activated sensor. The limit guards against the overheating as a result of insufficient conditioned air passing over the heat exchanger.

Auxiliary Limit

The auxiliary limit control(s) are located on or near the circulator blower and monitors heat exchanger compartment temperatures. They are a normally-closed (electrically), manual-reset, temperature activated sensors. These limits guard against overheating as a result of insufficient conditioned air passing over the heat exchanger.

Rollout Limit

The rollout limit control(s) are mounted on the burner/manifold assembly and monitor the burner flame. They are normally-closed (electrically), manual-reset, temperature-activated sensors. These limits guard against burner flames not being properly drawn into the heat exchanger.

Pressure Switches

The pressure switches are normally-open (closed during operation), single-pole single-throw, negative air pressure-activated switches. They monitor the airflow (combustion air and flue products) through the heat exchanger via pressure taps located on the induced draft blower and the coil front cover. These switches guard against insufficient airflow (combustion air and flue products) through the heat exchanger and/or blocked condensate drain conditions.

Flame Sensor

The flame sensor is a probe mounted to the burner/manifold assembly which uses the principle of flame rectification to determine the presence or absence of flame.

XVIII. TROUBLESHOOTING

Electrostatic Discharge (ESD) Precautions

NOTE: Discharge body's static electricity before touching unit. An electrostatic discharge can adversely affect electrical components.

Use the following precautions during furnace installation and servicing to protect the integrated control module from damage. By putting the furnace, the control, and the person at the same electrostatic potential, these steps will help avoid exposing the integrated control module to electrostatic discharge. This procedure is applicable to both installed and uninstalled (ungrounded) furnaces.

1. Disconnect all power to the furnace. Do not touch the integrated control module or any wire connected to the control prior to discharging your body's electrostatic charge to ground.
2. Firmly touch a clean, unpainted, metal surface of the furnaces near the control. Any tools held in a person's hand during grounding will be discharged.
3. Service integrated control module or connecting wiring following the discharge process in step 2. Use caution not to recharge your body with static electricity; (i.e., do not move or shuffle your feet, do not touch ungrounded objects, etc.). If you come in contact with an ungrounded object, repeat step 2 before touching control or wires.
4. Discharge your body to ground before removing a new control from its container. Follow steps 1 through 3 if installing the control on a furnace. Return any old or new controls to their containers before touching any ungrounded object.

Diagnostic Chart

WARNING

HIGH VOLTAGE!
To avoid personal injury or death due to electrical shock, disconnect electrical power before performaing any service or maintenance.

Refer to the *Troubleshooting Chart* at the end of this manual for assistance in determining the source of unit operational problems. The red diagnostic LED blinks to assist in troubleshooting the unit. The number of blinks refers to a specific fault code.

Fault Recall

The ignition control is equipped with a momentary pushbutton switch that can be used to display on the diagnostic LED the last five faults detected by the control. The control must be in Standby Mode (no thermostat inputs) to use the feature. Depress the pushbutton switch for approximately 2 seconds. Release the switch when the LED is turned off. The diagnostic LED will then display the flash codes associated with the last five detected faults. The order of display is the most recent fault to the least recent fault.

Resetting From Lockout

Furnace lockout results when a furnace is unable to achieve ignition after three attempts during a single call for heat. It is characterized by a non-functioning furnace and a one flash diagnostic LED code. If the furnace is in "lockout", it will (or can be) reset in any of the following ways.

1. Automatic reset. The integrated control module will automatically reset itself and attempt to resume normal operations following a one hour lockout period.
2. Manual power interruption. Interrupt 115 volt power to the furnace for 1 - 20 seconds.
3. Manual thermostat cycle. Lower the thermostat so that there is no longer a call for heat then reset to previous setting. Interrupt thermostat signal to the furnace for 1 - 20 seconds.

NOTE: If the condition which originally caused the lockout still exists, the control will return to lockout. Refer to *Troubleshooting - Diagnostic Chart* for aid in determining the cause.

XIX. MAINTENANCE

WARNING

HIGH VOLTAGE!
TO AVOID PERSONAL INJURY OR DEATH DUE TO ELECTRICAL SHOCK, DISCONNECT ELECTRICAL POWER BEFORE PERFORMING ANY MAINTENANCE. IF YOU MUST HANDLE THE IGNITER, HANDLE WITH CARE. TOUCHING THE IGNITER ELEMENT WITH BARE FINGERS, ROUGH HANDLING OR VIBRATION COULD DAMAGE THE IGNITER RESULTING IN PREMATURE FAILURE. ONLY A QUALIFIED SERVICER SHOULD EVER HANDLE THE IGNITER.

ANNUAL INSPECTION

The furnace should be inspected by a qualified installer, or service agency at least once per year. This check should be performed at the beginning of the heating season. This will ensure that all furnace components are in proper working order and that the heating system functions appropriately. Pay particular attention to the following items. Repair or service as necessary.

- Flue pipe system. Check for blockage and/or leakage. Check the outside termination and the connections at and internal to the furnace.
- Heat exchanger. Check for corrosion and/or buildup within the heat exchanger passageways.
- Burners. Check for proper ignition, burner flame, and flame sense.
- Drainage system. Check for blockage and/or leakage. Check hose connections at and internal to furnace.
- Wiring. Check electrical connections for tightness and/or corrosion. Check wires for damage.
- Filters.

FILTERS

CAUTION

TO ENSURE PROPER UNIT PERFORMANCE, ADHERE TO THE FILTER SIZES GIVEN IN THE RECOMMENDED MINIMUM FILTER SIZE TABLE OR SPECIFICATION SHEET APPLICABLE TO YOUR MODEL*

*NOTE: Please contact your distributor or our website for the applicable Specification Sheet referred to in this manual.

MAINTENANCE

Improper filter maintenance is the most common cause of inadequate heating or cooling performance. Filters should be cleaned (permanent) or replaced (disposable) every two months or as required. When replacing a filter, it must be replaced with a filter of the same type and size.

FILTER REMOVAL

Depending on the installation, differing filter arrangements can be applied. Filters can be installed in either the central return register or a side panel external filter rack (upflow only). A media air filter or electronic air cleaner can be used as an alternate filter. Follow the filter sizes given in the Recommended Minimum Filter size table to ensure proper unit performance.
To remove filters from an external filter rack in an upright upflow installation, follow the directions provided with external filter rack kit.

HORIZONTAL UNIT FILTER REMOVAL

Filters in horizontal installations are located in the central return register or the ductwork near the furnace.
To remove:

1. Turn OFF electrical power to furnace.
2. Remove filter(s) from the central return register or ductwork.
3. Replace filter(s) by reversing the procedure for removal.
4. Turn ON electrical power to furnace.

MEDIA AIR FILTER OR ELECTRONIC AIR CLEANER REMOVAL

Follow the manufacturer's directions for service.

BURNERS

Visually inspect the burner flames periodically during the heating season. Turn on the furnace at the thermostat and allow several minutes for flames to stabilize, since any dislodged dust will alter the flames normal appearance. Flames should be stable, quiet, soft, and blue (dust may cause orange tips but they must not be yellow). They should extend directly outward from the burners without curling, floating, or lifting off. Flames must not impinge on the sides of the heat exchanger firing tubes.

INDUCED DRAFT AND CIRCULATOR BLOWERS

The bearings in the induced draft blower and circulator blower motors are permanently lubricated by the manufacturer. No further lubrication is required. Check motor windings for accumulation of dust which may cause overheating. Clean as necessary.

CONDENSATE TRAP AND DRAIN SYSTEM (QUALIFIED SERVICER ONLY)

Annually inspect the drain tubes, drain trap, and field-supplied drain line for proper condensate drainage. Check drain system for hose connection tightness, blockage, and leaks. Clean or repair as necessary.

FLAME SENSOR (QUALIFIED SERVICER ONLY)

Under some conditions, the fuel or air supply can create a nearly invisible coating on the flame sensor. This coating acts as an insulator causing a drop in the flame sense signal. If the flame sense signal drops too low the furnace will not sense flame and will lock out. The flame sensor should be carefully cleaned by a qualified servicer using emery cloth or steel wool. Following cleaning, the flame sense signal should be 1 to 6 microamps at 115 volts.

IGNITER (QUALIFIED SERVICER ONLY)

If the igniter and the surrounding air are at about 70°F and the igniter wires are not connected to any other electrical components, the resistance of the igniter should not exceed 75 ohms. If it does, the igniter should be replaced.

FLUE PASSAGES (QUALIFIED SERVICER ONLY)

The heat exchanger flue passageways should be inspected at the beginning of each heating season. If necessary, clean the passageways as outlined below.

1. Turn OFF the electrical power and gas supply to the furnace.
2. Disconnect the gas line and remove the burner/ manifold assembly by removing the screws securing the assembly to the partition panel.
3. Disconnect the flue pipe system from the induced draft blower.
4. Remove the induced draft blower and, drain and pressure tap hoses from the recuperator coil front cover.
5. Remove the recuperator coil front cover to expose the coil tubes and turbulators.

6. Remove the recuperator coil turbulators individually by slowly pulling each turbulator forward firmly.
7. Clean the recuperator coil tubes using a long handle wire brush, such as a gun cleaning brush.
8. Clean the primary heat exchanger tubes using a wire brush attached to a length of high grade stainless steel cable, such as drain cleanout cable. Attach a variable speed reversible drill to the other end of the cable. Slowly rotate the cable with the drill and insert it into one of the heat exchanger tubes. While reversing the drill, work the cable in and out several times to obtain sufficient cleaning. Repeat for each tube.
9. Clean residue from furnace using a vacuum cleaner.
10. Replace the parts removed in the previous steps in reverse order.
11. Turn on electrical power and gas to furnace. Check for leaks and proper unit operation.
12. Severe heat exchanger fouling is an indication of an operational problem. Perform the checks listed in *Section XIV, Startup Procedure and Adjustments* to reduce the chances of repeated fouling.

XX. BEFORE LEAVING AN INSTALLATION

- Cycle the furnace with the thermostat at least three times. Verify cooling and fan only operation.
- Review the Owner's Manual with the homeowner and discuss proper furnace operation and maintenance.
- Leave literature packet near furnace.

XXI. REPAIR & REPLACEMENT PARTS

- When ordering any of the listed functional parts, be sure to provide the furnace model, manufacturing, and serial numbers with the order.
- Although only functional parts are shown in the parts list, all sheet metal parts, doors, etc. may be ordered by description.
- Parts are available from your distributor.

Functional Parts List-

Gas Valve	Blower Motor
Gas Manifold	Blower Wheel
Natural Gas Orifice	Blower Mounting Bracket
Propane Gas Orifice	Blower Cutoff
Igniter	Blower Housing
Flame Sensor	Capacitor
Rollout Limit Switch	Heat Exchanger
Primary Limit Switch	Coil Front Cover
Auxiliary Limit Switch	Integrated Control Module
Pressure Switch	Transformer
Induced Draft Blower	
Door Switch	

TROUBLESHOOTING CHART

Symptoms of Abnormal Operation	Associated LED Code[2]	Fault Description(s)	Possible Causes	Corrective Action	Cautions and Notes
• Furnace fails to operate. • Integrated control module diagnostic **LED** provides **no signal**.	NONE	• No 115 volt power to furnace, or no 24 volt power to integrated control module. • Blown fuse or circuit breaker. • Integrated control module has an internal fault.	• Manual disconnect switch OFF, door switch open, or 24 volt wires improperly connected or loose. • Blown fuse or circuit breaker. • Integrated control module has an internal fault.	• Assure 115 and 24 volt power to furnace integrated control module. • Check integrated control module fuse (3A). Replace if necessary. • Check for possible shorts in 115 and 24 volt circuits. Repair as necessary. • Replace bad integrated control module.	• Turn power OFF prior to repair. • Replace integrated control module fuse with 3A automotive fuse. • Read precautions in “Electrostatic Discharge” section of manual.
• LED is Steady On.	ON CONTINUOUS ON	• Normal Operation	•Normal Operation	• None	•Normal Operation
• Furnace fails to operate. • Integrated control module diagnostic **LED** is flashing **ONE** (1) flash.	1 1 FLASH	• Furnace lockout due to an excessive number of ignition “retries” (3 total)[1].	• Failure to establish flame. Cause may be no gas to burners, front cover pressure switch stuck open, bad igniter or igniter alignment, improper orifices, or coated/oxidized or improperly connected flame sensor. • Loss of flame after establishment. Cause may be interrupted gas supply, lazy burner flames (improper gas pressure or restriction in flue and/or combustion air piping), front cover pressure switch opening, or improper induced draft blower performance.	• Locate and correct gas interruption. • Check front cover pressure switch operation (hose, wiring, contact operation). Correct if necessary. • Replace or realign igniter. • Check flame sense signal. Sand sensor if coated and/or oxidized. • Check flue piping for blockage, proper length, elbows, and termination. • Verify proper induced draft blower performance.	• Turn power OFF prior to repair. • Igniter is fragile, handle with care. • Sand flame sensor with emery cloth. • See “Vent/Flue Pipe” section for piping details.
• Furnace fails to operate. • Integrated control module diagnostic **LED** is flashing **TWO** (2) flashes.	2 2 FLASHES	• Pressure switch circuit is closed. • Induced draft blower **is not** operating.	• Induced draft blower pressure switch contacts sticking. • Shorts in pressure switch circuit.	• Replace induced draft blower pressure switch. • Repair short.	• Turn power OFF prior to repair. • Replace pressure switch with proper replacement part.
• Induced draft blower runs continuously with no further furnace operation. • Integrated control module diagnostic **LED** is flashing **THREE** (3) flashes.	3 3 FLASHES	• Pressure switch circuit not closed. • Induced draft blower **is** operating.	• Pressure switch hose blocked, pinched or connected improperly. • Blocked flue and/or inlet air pipe, blocked drain system, or weak induced draft blower. • Incorrect pressure switch setpoint or malfunctioning switch contacts. • Loose or improperly connected wiring.	• Inspect pressure switch hose. Repair, if necessary, • Inspect flue and/or inlet air piping for blockage, proper length, elbows, and termination. Check drain system. Correct as necessary. • Correct pressure switch setpoint or contact motion. • Tighten or correct wiring connection.	• Turn power OFF prior to repair. • Replace pressure switch with proper replacement part.

[1]Integrated control module will automatically attempt to reset from lockout after one hour.

[2]LED Flash code will cease if power to the control module is interrupted through the disconnect or door switch.

TROUBLESHOOTING CHART

Symptoms of Abnormal Operation	Associated LED Code[2]	Fault Description(s)	Possible Causes	Corrective Action	Cautions & Notes
• Circulator blower runs continuously. No furnace operation. • Integrated control module diagnostic **LED** is flashing **FOUR** (4) flashes.	4 4 FLASHES	• Primary limit circuit is open.	• Insufficient conditioned air over the heat exchanger. Blocked filters, restrictive ductwork, improper circulator blower speed, or failed circulator blower. • Faulty primary limit switch. • Loose or improperly connected wiring.	• Check primary limit. Replace if necessary. • Check filters and ductwork for blockage. Clean filters or remove obstruction. • Check circulator blower speed and performance. Correct speed or replace blower if necessary. • Tighten or correct wiring connection.	• Turn power OFF prior to repair. • Replace primary switch with proper replacement part. • Replace blower with correct replacement part.
• Induced draft blower and circulator blower runs continuously. No furnace operation. • Integrated control module diagnostic **LED** is flashing **FIVE** (5) flashes.	5 5 FLASHES	• Flame sensed with no call for heat.	• Short to ground in flame sense circuit.	• Correct short at flame sensor or in flame sensor wiring.	• Turn power OFF prior to repair.
• Furnace fails to operate. • Integrated control module diagnostic **LED** is flashing **SIX** (6) flashes. • No furnace operation.	6 6 FLASHES	• Rollout limit open. • Integrated control module fuse is blown.	• Flame rollout. • Misaligned burners, blocked flue and/or air inlet pipe, or failed induced draft blower. • Loose or improperly connected wiring. • Short in 24 volt AC control circuits or safety circuits. •Faulty rollout limit.	• Check burners for proper alignment. • Check flue and air inlet piping for blockage, proper length, elbows, and termination. Correct as necessary. • Check rollout limit. Replace if necessary. • Check induced draft blower for proper performance. Replace, if necessary. • Tighten or correct wiring connection. • Repair short in 24 volt AC control/safety circuit(s). • Replace integrated control module fuse (3A).	• See “Vent/Flue Pipe” section for piping details. • Replace induced draft blower with proper replace-ment part. • Replace inte-grated control module fuse with 3A automotive fuse. • Read precautions in “Electrostatic Discharge” section of manual. • Replace rollout limit with correct replacement part.
• Normal furnace operation. • Integrated control module diagnostic **LED** is flashing **SEVEN** (7) flashes.	7 7 FLASHES	• Flame sense microamp signal is low.	• Flame sensor is coated/ oxidized. • Flame sensor incorrectly positioned in burner flame. • Lazy burner flame due to improper gas pressure or combustion air.	• Sand flame sensor. • Inspect for proper sensor alignment. • Compare current gas pressure to rating plate info. Adjust as needed.	• Turn power OFF prior to repair. • Clean flame sensor with steel wool. • See “Vent/Flue Pipe” section for piping details. • See rating plate for proper gas pressure.
• Furnace not operating. • Integrated control module diagnostic **LED** is flashing **EIGHT** (8) flashes.	8 8 FLASHES	• Problem with igniter circuit.	• Improperly connected igniter. • Bad igniter. • Poor unit ground. • Poor burner ground. • Faulty integrated control module.	• Check and correct wiring from integrated control module to igniter. •Replace bad igniter. •Check and correct unit ground wiring. • Replace bad integrated control module.	• Turn power OFF prior to repair. • Replace igniter with proper replacement part. • Read precautions in “Electrostatic Discharge” section of manual.
• Induced draft blower runs continuously. No furnace operation. • Integrated control module diagnostic **LED** is flashing **continuously.**	C CONTINUOUS FLASHING	• Polarity of 115 or 24 volt power is reversed.	• Polarity of 115 volt AC power to furnace or integrated control module is reversed. • Red and blue wires to transformer are reversed. • Poor unit ground.	• Review wiring diagram to correct polarity. • Verify proper ground. Correct if necessary. • Reverse red and blue wires connected to transformer.	• Turn power OFF prior to repair.
• LED is steady on	STEADY ON	• Normal operation.			

[2] LED Flash code will cease if power to the control module is interrupted through the disconnect or door switch.

BLOWER PERFORMANCE

(CFM & Temperature Rise vs. External Static Pressure)

Model / Heating Speed As Shipped	Motor Speed	Tons AC at 0.5" ESP	EXTERNAL STATIC PRESSURE (Inches Water Column)												
			0.1		0.2		0.3		0.4		0.5		0.6	0.7	0.8
			CFM	RISE	CFM	RISE	CFM	RISE	CFM	RISE	CFM	RISE	CFM	CFM	CFM
MH950453BX (MED-HI)	HIGH	3.0	1352	29	1318	30	1260	31	1202	33	1128	35	1044	955	853
	MED	2.5	1214	32	1172	34	1123	35	1064	37	1012	39	938	859	741
	MED-LO	2.0	997	40	994	40	960	41	923	43	884	45	817	741	611
	LOW	1.5	757	52	753	52	734	54	704	56	674	59	620	524	438
MH950703BX (MED-HI)	HIGH	3.0	1449	41	1409	42	1326	45	1273	47	1201	49	1194	1136	1018
	MED	2.5	1192	50	1172	51	1141	52	1094	54	1046	57	973	904	793
	MED-LO	2.0	981	61	962	62	943	63	917	65	888	67	830	764	665
	LOW	1.5	750	79	730	81	714	83	692	86	657	90	620	570	502
MH950704CX (MED-HI)	HIGH	4.0	2069	29	1965	30	1871	32	1756	34	1661	36	1549	1415	1275
	MED	3.5	1752	34	1724	34	1667	36	1603	37	1488	40	1402	1290	1082
	MED-LO	3.0	1437	41	1437	41	1417	42	1369	43	1320	45	1256	1140	984
	LOW	2.5	1184	50	1177	50	1161	51	1132	52	1095	54	1047	928	837
MH950904CX (MED-HI)	HIGH	4.0	1970	40	1874	42	1757	45	1667	48	1566	51	1431	1334	1182
	MED	3.5	1713	46	1650	48	1572	50	1510	52	1418	56	1313	1211	1079
	MED-LO	3.0	1439	55	1412	56	1370	58	1327	60	1260	63	1166	1078	956
	LOW	2.5	1183	67	1155	69	1122	74	1108	72	1062	75	1011	931	816
MH950905CX (MED-HI)	HIGH	5.0	2058	39	1997	40	1928	42	1852	43	1777	45	1682	1600	1487
	MED	4.0	1718	47	1685	48	1632	49	1586	51	1520	53	1458	1369	1281
	MED-LO	3.5	1502	54	1464	55	1429	56	1380	58	1319	61	1272	1200	1137
	LOW	3.0	1305	62	1277	63	1253	64	1212	66	1175	69	1127	1081	1010
MH950905DX (MED-HI)	HIGH	5.0	2147	37	2114	37	2057	39	2030	39	1978	40	1889	1784	1713
	MED	4.0	1675	47	1686	47	1640	48	1623	49	1557	51	1501	1455	1360
	MED-LO	3.5	1489	53	1470	54	1436	55	1409	56	1361	58	1318	1243	1130
	LOW	3.0	1307	61	1265	63	1234	64	1203	66	1168	68	1096	1053	991
MH951155DX (MED-HI)	HIGH	5.0	2134	46	2103	47	2029	48	1941	51	1906	51	1818	1733	1625
	MED	4.0	1678	58	1643	60	1643	60	1577	62	1527	64	1489	1423	1339
	MED-LO	3.5	1453	68	1440	68	1426	69	1363	72	1349	73	1314	1253	1205
	LOW	3.0	1259	78	1239	79	1220	80	1181	83	1159	85	1118	1082	1015

1. CFM in chart is without filters(s). Filters do not ship with this furnace, but must be provided by the installer. If the furnace requires two return filters, this chart assumes both filters are installed.
2. All furnaces ship as high speed cooling and medium-speed heating. Installer must adjust blower cooling & heating speed as needed.
3. For most jobs, about 400 CFM per ton when cooling is desirable.
4. INSTALLATION IS TO BE ADJUSTED TO OBTAIN TEMPERATURE RISE WITHIN THE RANGE SPECIFIED ON THE RATING PLATE.
5. The chart is for information only. For satisfactory operation, external static pressure must not exceed value shown on rating plate. The shaded area indicates ranges in excess of maximum external static pressure allowed when heating. The data for 0.6" w.c. to 0.8" w.c. is shown for air conditioning purposes only.
6. At higher altitudes, a properly de-rated unit will have approximately the same temperature rise at a particular CFM, while the ESP at that CFM will be lower.

BLOWER PERFORMANCE
(CFM & Temperature Rise vs. External Static Pressure)

Model / Heating Speed As Shipped	Motor Speed	Tons AC at 0.5" ESP	EXTERNAL STATIC PRESSURE (Inches Water Column)												
			0.1		0.2		0.3		0.4		0.5		0.6	0.7	0.8
			CFM	RISE	CFM	RISE	CFM	RISE	CFM	RISE	CFM	RISE	CFM	CFM	CFM
ACSH960453BX* (MED-HI)	HIGH	3.0	1415	28	1352	30	1290	31	1196	34	1127	36	1035	936	825
	MED	2.5	1221	33	1178	34	1127	36	1073	38	1007	40	932	834	733
	MED-LO	2.0	1034	39	1000	40	976	41	935	43	881	46	818	733	662
	LOW	1.5	860	47	845	48	812	50	783	51	740	54	682	619	534
ACSH960703BX* (MED-HI)	HIGH	3.0	1431	42	1368	44	1296	47	1228	49	1150	53	1055	962	860
	MED	2.5	1212	50	1182	51	1138	53	1091	55	1019	59	944	871	769
	MED-LO	2.0	1002	60	978	62	956	63	921	66	878	69	825	738	647
	LOW	1.5	813	74	805	75	790	76	759	80	726	83	689	644	605
ACSH960704CX* (MED-HI)	HIGH	4.0	1755	34	1674	36	1632	37	1510	40	1423	42	1325	1241	1116
	MED	3.5	1656	36	1585	38	1536	39	1429	42	1355	45	1268	1145	1059
	MED-LO	3.0	1551	39	1488	41	1427	42	1353	45	1290	47	1195	1100	1017
	LOW	2.5	1286	47	1258	48	1241	49	1185	51	1112	54	1067	983	886
ACSH960904CX* (MED-HI)	HIGH	4.0	1734	46	1652	49	1578	51	1508	53	1413	57	1336	1248	1154
	MED	3.5	1642	49	1558	52	1487	54	1418	57	1336	60	1243	1164	1039
	MED-LO	3.0	1522	53	1458	55	1396	58	1321	61	1253	64	1182	1101	986
	LOW	2.5	1287	63	1244	65	1184	68	1148	70	1098	73	1034	953	849
ACSH960905DX* (MED-HI)	HIGH	5.0	2189	37	2109	38	2025	40	1948	41	1862	43	1757	1644	1537
	MED	4.0	1885	43	1831	44	1776	45	1711	47	1637	49	1539	1453	1346
	MED-LO	3.5	1665	48	1627	50	1584	51	1524	53	1462	55	1400	1323	1220
	LOW	3.0	1474	55	1440	56	1401	57	1356	59	1310	61	1255	1193	1109
ACSH961155DX* (MED-HI)	HIGH	5.0	2134	46	2103	47	2029	48	1941	51	1906	51	1818	1733	1625
	MED	4.0	1678	58	1643	60	1643	60	1577	62	1527	64	1489	1423	1339
	MED-LO	3.5	1453	68	1440	68	1426	69	1363	72	1349	73	1314	1253	1205
	LOW	3.0	1259	78	1239	79	1220	80	1181	83	1159	85	1118	1082	1015

1. CFM in chart is without filters(s). Filters do not ship with this furnace, but must be provided by the installer. If the furnace requires two return filters, this chart assumes both filters are installed.
2. All furnaces ship as high speed cooling and medium-speed heating. Installer must adjust blower cooling & heating speed as needed.
3. For most jobs, about 400 CFM per ton when cooling is desirable.
4. INSTALLATION IS TO BE ADJUSTED TO OBTAIN TEMPERATURE RISE WITHIN THE RANGE SPECIFIED ON THE RATING PLATE.
5. The chart is for information only. For satisfactory operation, external static pressure must not exceed value shown on rating plate. The shaded area indicates ranges in excess of maximum external static pressure allowed when heating. The data for 0.6" w.c. to 0.8" w.c. is shown fo air conditioning purposes only.
6. At higher altitudes, a properly de-rated unit will have approximately the same temperature rise at a particular CFM, while the ESP at that CFM will be lower.

(CFM & TEMPERATURE RISE VS. EXTERNAL STATIC PRESSURE)															
Model ---------- Heating Speed As Shipped	Motor Speed	Tons AC at 0.5" ESP	EXTERNAL STATIC PRESSURE (Inches Water Column)												
			0.1		0.2		0.3		0.4		0.5		0.6	0.7	0.8
			CFM	RISE	CFM	RISE	CFM	RISE	CFM	RISE	CFM	RISE	CFM	CFM	CFM
AMEH960403BX* (MED-HI)	T1 - YELLOW	1.5	726	48	670	53	617	57	553	64	490	72	429	378	336
	T2 - RED	2.0	905	39	860	41	812	43	761	46	712	49	663	610	574
	T3 - ORANGE	2.5	1121	31	1074	33	1039	34	998	35	959	37	923	882	839
	T4 - BLUE	3.0	1274	28	1239	28	1199	29	1166	30	1129	31	1096	1059	1021
	T5 - BLACK	3.0	1306	27	1261	28	1232	29	1195	29	1162	30	1132	1090	1057
AMEH960603BX* (MED-HI)	T1 - YELLOW	1.5	714	80	667	79	604	87	548	96	484	109	422	367	325
	T2 - RED	2.0	904	58	851	62	804	66	761	69	708	75	664	612	572
	T3 - ORANGE	2.5	1125	47	1075	49	1045	51	999	53	956	55	921	877	839
	T4 - BLUE	3.0	1312	40	1271	42	1228	43	1202	44	1165	45	1127	1087	1044
	T5 - BLACK	3.5	1423	37	1386	38	1354	39	1321	40	1278	41	1210	1134	1032
AMEH960805CX* (MED-HI)	T1 - YELLOW	3.0	1297	54	1253	56	1209	58	1161	61	1111	63	1067	1022	974
	T2 - RED	3.5	1507	47	1455	48	1422	49	1377	51	1334	53	1296	1251	1195
	T3 - ORANGE	4.0	1677	42	1637	43	1602	44	1562	45	1526	46	1484	1441	1324
	T4 - BLUE	4.0	1879	37	1842	38	1800	39	1762	40	1700	41	1566	1437	1319
	T5 - BLACK	5.0	2044	35	1967	36	1894	37	1795	39	1702	41	1578	1452	1320
AMEH961005DX* (MED-HI)	T1 - YELLOW	3.0	1331	66	1275	69	1206	73	1145	77	1080	81	1021	953	889
	T2 - RED	3.5	1512	58	1452	60	1392	63	1336	66	1279	69	1219	1175	1115
	T3 - ORANGE	4.0	1713	51	1666	53	1614	57	1569	56	1513	58	1468	1414	1364
	T4 - BLUE	4.0	1892	46	1845	48	1802	49	1752	50	1707	52	1656	1614	1577
	T5 - BLACK	5.0	2080	42	2038	43	2005	44	1960	45	1920	46	1879	1843	1791

1. CFM in chart is without filters(s). Filters do not ship with this furnace, but must be provided by the installer. If the furnace requires two return filters, this chart assumes both filters are installed.
2. All furnaces ship as high speed cooling and medium-speed heating. Installer must adjust blower cooling & heating speed as needed.
3. For most jobs, about 400 CFM per ton when cooling is desirable.
4. INSTALLATION IS TO BE ADJUSTED TO OBTAIN TEMPERATURE RISE WITHIN THE RANGE SPECIFIED ON THE RATING PLATE.
5. The chart is for information only. For satisfactory operation, external static pressure must not exceed value shown on rating plate. The shaded area indicates ranges in excess of maximum external static pressure allowed when heating. The data for 0.6" w.c. to 0.8" w.c. is shown fo air conditioning purposes only.
6. At higher altitudes, a properly de-rated unit will have approximately the same temperature rise at a particular CFM, while the ESP at that CFM will be lower.

BLOWER PERFORMANCE DATA

BLOWER PERFORMANCE (CFM & Temperature Rise vs. External Static Pressure)															
Model / Heating Speed As Shipped	Motor Speed	Tons AC at 0.5" ESP	EXTERNAL STATIC PRESSURE (Inches Water Column)												
			0.1		0.2		0.3		0.4		0.5		0.6	0.7	0.8
			CFM	RISE	CFM	RISE	CFM	RISE	CFM	RISE	CFM	RISE	CFM	CFM	CFM
GCH950453BX* (MED-HI)	HIGH	3.0	1415	28	1352	30	1290	31	1196	34	1127	36	1035	936	825
	MED	2.5	1221	33	1178	34	1127	36	1073	38	1007	40	932	834	733
	MED-LO	2.0	1034	39	1000	40	976	41	935	43	881	46	818	733	662
	LOW	1.5	860	47	845	48	812	50	783	51	740	54	682	619	534
GCH950703BX* (MED-HI)	HIGH	3.0	1431	42	1368	44	1296	47	1228	49	1150	53	1055	962	860
	MED	2.5	1212	50	1182	51	1138	53	1091	55	1019	59	944	871	769
	MED-LO	2.0	1002	60	978	62	956	63	921	66	878	69	825	738	647
	LOW	1.5	813	74	805	75	790	76	759	80	726	83	689	644	605
GCH950704CX* (MED-HI)	HIGH	4.0	1755	34	1674	36	1632	37	1510	40	1423	42	1325	1241	1116
	MED	3.5	1656	36	1585	38	1536	39	1429	42	1355	45	1268	1145	1059
	MED-LO	3.0	1551	39	1488	41	1427	42	1353	45	1290	47	1195	1100	1017
	LOW	2.5	1286	47	1258	48	1241	49	1185	51	1112	54	1067	983	886
GCH960904CX* (MED-HI)	HIGH	4.0	1734	46	1652	49	1578	51	1508	53	1413	57	1336	1248	1154
	MED	3.5	1642	49	1558	52	1487	54	1418	57	1336	60	1243	1164	1039
	MED-LO	3.0	1522	53	1458	55	1396	58	1321	61	1253	64	1182	1101	986
	LOW	2.5	1287	63	1244	65	1184	68	1148	70	1098	73	1034	953	849
GCH950905DX* (MED-HI)	HIGH	5.0	2189	37	2109	38	2025	40	1948	41	1862	43	1757	1644	1537
	MED	4.0	1885	43	1831	44	1776	45	1711	47	1637	49	1539	1453	1346
	MED-LO	3.5	1665	48	1627	50	1584	51	1524	53	1462	55	1400	1323	1220
	LOW	3.0	1474	55	1440	56	1401	57	1356	59	1310	61	1255	1193	1109
GCH91155DX* (MED-HI)	HIGH	5.0	2134	46	2103	47	2029	48	1941	51	1906	51	1818	1733	1625
	MED	4.0	1678	58	1643	60	1643	60	1577	62	1527	64	1489	1423	1339
	MED-LO	3.5	1453	68	1440	68	1426	69	1363	72	1349	73	1314	1253	1205
	LOW	3.0	1259	78	1239	79	1220	80	1181	83	1159	85	1118	1082	1015

1. CFM in chart is without filters(s). Filters do not ship with this furnace, but must be provided by the installer. If the furnace requires two return filters, this chart assumes both filters are installed.
2. All furnaces ship as high speed cooling and medium-speed heating. Installer must adjust blower cooling & heating speed as needed.
3. For most jobs, about 400 CFM per ton when cooling is desirable.
4. INSTALLATION IS TO BE ADJUSTED TO OBTAIN TEMPERATURE RISE WITHIN THE RANGE SPECIFIED ON THE RATING PLATE.
5. The chart is for information only. For satisfactory operation, external static pressure must not exceed value shown on rating plate. The shaded area indicates ranges in excess of maximum external static pressure allowed when heating. The data for 0.6" w.c. to 0.8" w.c. is shown fo air conditioning purposes only.
6. At higher altitudes, a properly de-rated unit will have approximately the same temperature rise at a particular CFM, while the ESP at that CFM will be lower.

(CFM & TEMPERATURE RISE VS. EXTERNAL STATIC PRESSURE)															
Model ---------- Heating Speed As Shipped	Motor Speed	Tons AC at 0.5" ESP	EXTERNAL STATIC PRESSURE (Inches Water Column)												
			0.1		0.2		0.3		0.4		0.5		0.6	0.7	0.8
			CFM	RISE	CFM	RISE	CFM	RISE	CFM	RISE	CFM	RISE	CFM	CFM	CFM
GME950403BX* (MED-HI)	T1 - YELLOW	1.5	726	48	670	53	617	57	553	64	490	72	429	378	336
	T2 - RED	2.0	905	39	860	41	812	43	761	46	712	49	663	610	574
	T3 - ORANGE	2.5	1121	31	1074	33	1039	34	998	35	959	37	923	882	839
	T4 - BLUE	3.0	1274	28	1239	28	1199	29	1166	30	1129	31	1096	1059	1021
	T5 - BLACK	3.0	1306	27	1261	28	1232	29	1195	29	1162	30	1132	1090	1057
GME950603BX* (MED-HI)	T1 - YELLOW	1.5	714	80	667	79	604	87	548	96	484	109	422	367	325
	T2 - RED	2.0	904	58	851	62	804	66	761	69	708	75	664	612	572
	T3 - ORANGE	2.5	1125	47	1075	49	1045	51	999	53	956	55	921	877	839
	T4 - BLUE	3.0	1312	40	1271	42	1228	43	1202	44	1165	45	1127	1087	1044
	T5 - BLACK	3.5	1423	37	1386	38	1354	39	1321	40	1278	41	1210	1134	1032
GME950805CX* (MED-HI)	T1 - YELLOW	3.0	1297	54	1253	56	1209	58	1161	61	1111	63	1067	1022	974
	T2 - RED	3.5	1507	47	1455	48	1422	49	1377	51	1334	53	1296	1251	1195
	T3 - ORANGE	4.0	1677	42	1637	43	1602	44	1562	45	1526	46	1484	1441	1324
	T4 - BLUE	4.0	1879	37	1842	38	1800	39	1762	40	1700	41	1566	1437	1319
	T5 - BLACK	5.0	2044	35	1967	36	1894	37	1795	39	1702	41	1578	1452	1320
GME951005DX* (MED-HI)	T1 - YELLOW	3.0	1331	66	1275	69	1206	73	1145	77	1080	81	1021	953	889
	T2 - RED	3.5	1512	58	1452	60	1392	63	1336	66	1279	69	1219	1175	1115
	T3 - ORANGE	4.0	1713	51	1666	53	1614	57	1569	56	1513	58	1468	1414	1364
	T4 - BLUE	4.0	1892	46	1845	48	1802	49	1752	50	1707	52	1656	1614	1577
	T5 - BLACK	5.0	2080	42	2038	43	2005	44	1960	45	1920	46	1879	1843	1791

1. CFM in chart is without filters(s). Filters do not ship with this furnace, but must be provided by the installer. If the furnace requires two return filters, this chart assumes both filters are installed.
2. All furnaces ship as high speed cooling and medium-speed heating. Installer must adjust blower cooling & heating speed as needed.
3. For most jobs, about 400 CFM per ton when cooling is desirable.
4. INSTALLATION IS TO BE ADJUSTED TO OBTAIN TEMPERATURE RISE WITHIN THE RANGE SPECIFIED ON THE RATING PLATE.
5. The chart is for information only. For satisfactory operation, external static pressure must not exceed value shown on rating plate. The shaded area indicates ranges in excess of maximum external static pressure allowed when heating. The data for 0.6" w.c. to 0.8" w.c. is shown fo air conditioning purposes only.
6. At higher altitudes, a properly de-rated unit will have approximately the same temperature rise at a particular CFM, while the ESP at that CFM will be lower.

*MH95[0453,0704,0905D]
*MH95[0703,0904,1155]

WARNING

HIGH VOLTAGE!
DISCONNECT ALL POWER BEFORE SERVICING OR INSTALLING THIS UNIT. MULTIPLE POWER SOURCES MAY BE PRESENT. FAILURE TO DO SO MAY CAUSE PROPERTY DAMAGE, PERSONAL INJURY OR DEATH.

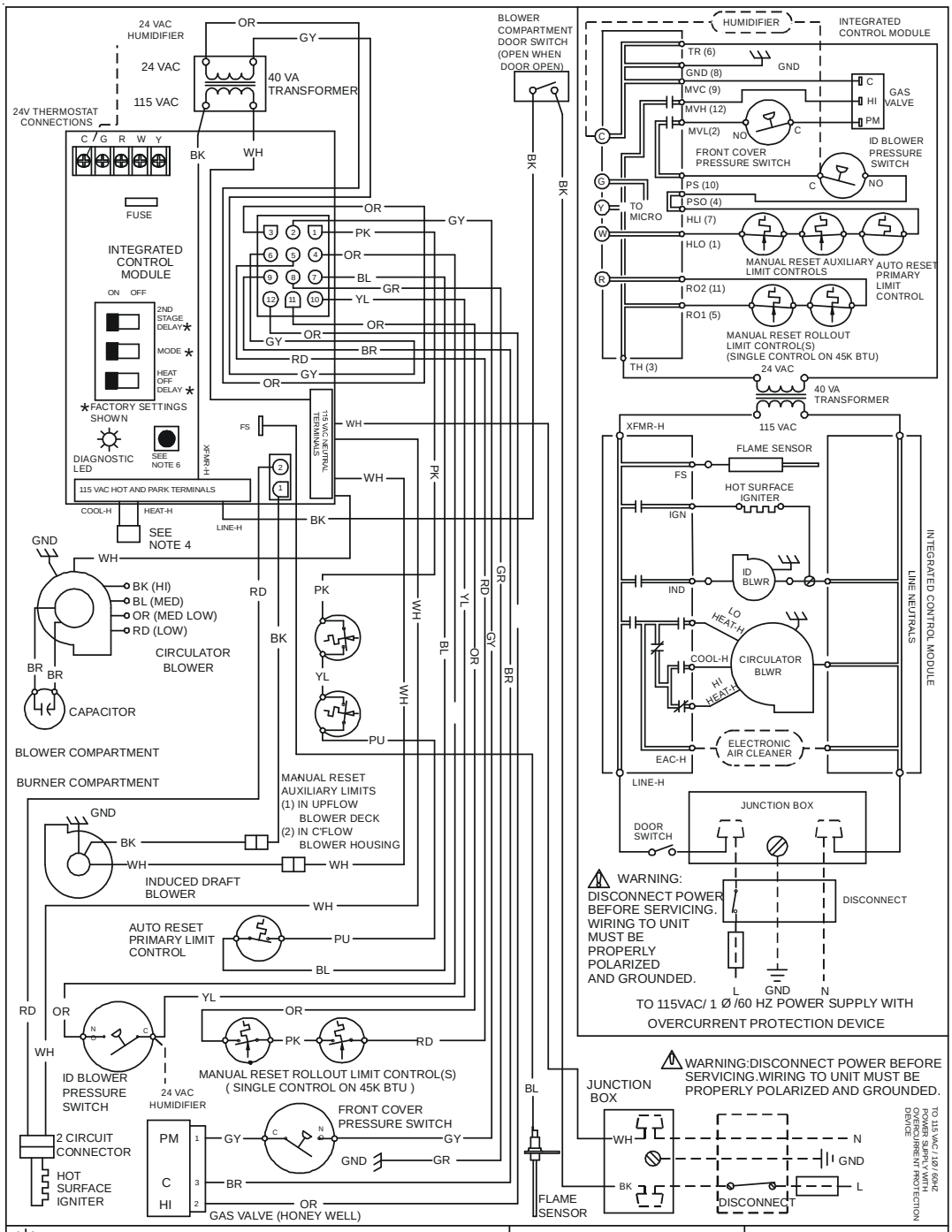

- STEADY ON = NORMAL OPERATION
- OFF = CONTROL FAILURE
- 1 FLASH = SYSTEM LOCKOUT (RETRIES EXCEEDED)
- 2 FLASHES = PRESSURE SWITCH STUCK CLOSED
- 3 FLASHES = PRESSURE SWITCH STUCK OPEN
- 4 FLASHES = OPEN HIGH LIMIT
- 5 FLASHES = FLAME SENSE WITHOUT GAS VALVE
- 6 FLASHES = OPEN ROLLOUT OR OPEN FUSE
- 7 FLASHES = LOW FLAME SIGNAL
- 8 FLASHES = CHECK IGNITER OR IMPROPER GROUNDING
- CONTINUOUS/RAPID FLASHES = REVERSED 115 VAC POLARITY

- LOW VOLTAGE (24V)
- LOW VOLTAGE FIELD
- HI VOLTAGE (115V)
- HI VOLTAGE FIELD
- JUNCTION
- TERMINAL
- INTERNAL TO INTEGRATED CONTROL
- PLUG CONNECTION

- EQUIPMENT GND
- FIELD GND
- FIELD SPLICE
- SWITCH (TEMP.)
- IGNITER
- SWITCH (PRESS.)
- OVERCURRENT PROT. DEVICE

COLOR CODES:	
YL YELLOW	PK PINK
OR ORANGE	BR BROWN
PU PURPLE	WH WHITE
GN GREEN	BL BLUE
BK BLACK	GY GRAY
	RD RED

0140F00663 REV. A

NOTES:
1. SET HEAT ANTICIPATOR ON ROOM THERMOSTAT AT 0.7 AMPS.
2. MANUFACTURER'S SPECIFIED REPLACEMENT PARTS MUST BE USED WHEN SERVICING.
3. IF ANY OF THE ORIGINAL WIRE AS SUPPLIED WITH THE FURNACE MUST BE REPLACED, IT MUST BE REPLACED WITH WIRING MATERIAL HAVING A TEMPERATURE RATING OF AT LEAST 105 °C. USE COPPER CONDUCTORS ONLY.
4. IF HEATING AND COOLING BLOWER SPEEDS ARE NOT THE SAME, DISCARD JUMPER BEFORE CONNECTING BLOWER LEADS. UNUSED BLOWER LEADS MUST BE PLACED ON "PARK" TERMINALS OF INTEGRATED CONTROL OR TAPED.
5. UNIT MUST BE PERMANENTLY GROUNDED AND CONFORM TO N.E.C. AND LOCAL CODES.
6. TO RECALL THE LAST 5 FAULTS, MOST RECENT TO LEAST RECENT, DEPRESS SWITCH FOR MORE THAN 2 SECONDS WHILE IN STANDBY (NO THERMOSTAT INPUTS)

Wiring is subject to change. Always refer to the wiring diagram on the unit for the most up-to-date wiring.

WARNING

HIGH VOLTAGE!
DISCONNECT ALL POWER BEFORE SERVICING OR INSTALLING THIS UNIT. MULTIPLE POWER SOURCES MAY BE PRESENT. FAILURE TO DO SO MAY CAUSE PROPERTY DAMAGE, PERSONAL INJURY OR DEATH.

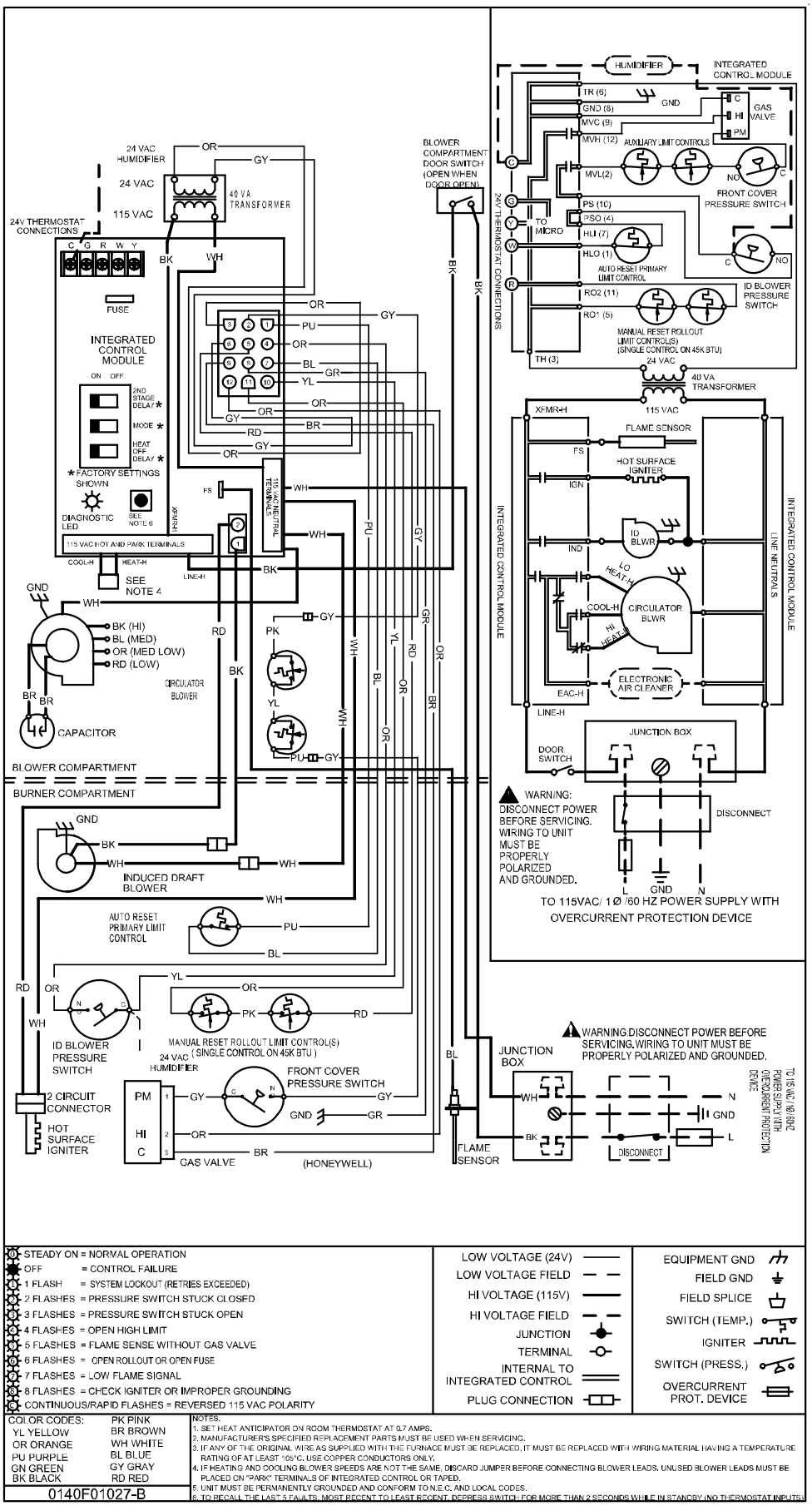

STEADY ON = NORMAL OPERATION	LOW VOLTAGE (24V)	EQUIPMENT GND
OFF = CONTROL FAILURE	LOW VOLTAGE FIELD	FIELD GND
1 FLASH = SYSTEM LOCKOUT (RETRIES EXCEEDED)	HI VOLTAGE (115V)	FIELD SPLICE
2 FLASHES = PRESSURE SWITCH STUCK CLOSED	HI VOLTAGE FIELD	SWITCH (TEMP.)
3 FLASHES = PRESSURE SWITCH STUCK OPEN	JUNCTION	IGNITER
4 FLASHES = OPEN HIGH LIMIT	TERMINAL	SWITCH (PRESS.)
5 FLASHES = FLAME SENSE WITHOUT GAS VALVE	INTERNAL TO INTEGRATED CONTROL	OVERCURRENT PROT. DEVICE
6 FLASHES = OPEN ROLLOUT OR OPEN FUSE	PLUG CONNECTION	
7 FLASHES = LOW FLAME SIGNAL		
8 FLASHES = CHECK IGNITER OR IMPROPER GROUNDING		
CONTINUOUS/RAPID FLASHES = REVERSED 115 VAC POLARITY		

COLOR CODES:	
YL YELLOW	PK PINK
OR ORANGE	BR BROWN
PU PURPLE	WH WHITE
GN GREEN	BL BLUE
BK BLACK	GY GRAY
	RD RED

0140F01027-B

NOTES:
1. SET HEAT ANTICIPATOR ON ROOM THERMOSTAT AT 0.7 AMPS.
2. MANUFACTURER'S SPECIFIED REPLACEMENT PARTS MUST BE USED WHEN SERVICING.
3. IF ANY OF THE ORIGINAL WIRE AS SUPPLIED WITH THE FURNACE MUST BE REPLACED, IT MUST BE REPLACED WITH WIRING MATERIAL HAVING A TEMPERATURE RATING OF AT LEAST 105°C. USE COPPER CONDUCTORS ONLY.
4. IF HEATING AND COOLING BLOWER SPEEDS ARE NOT THE SAME, DISCARD JUMPER BEFORE CONNECTING BLOWER LEADS. UNUSED BLOWER LEADS MUST BE PLACED ON "PARK" TERMINALS OF INTEGRATED CONTROL OR TAPED.
5. UNIT MUST BE PERMANENTLY GROUNDED AND CONFORM TO N.E.C. AND LOCAL CODES.
6. TO RECALL THE LAST 5 FAULTS, MOST RECENT TO LEAST RECENT, DEPRESS SWITCH FOR MORE THAN 2 SECONDS WHILE IN STANDBY (NO THERMOSTAT INPUTS).

Wiring is subject to change. Always refer to the wiring diagram on the unit for the most up-to-date wiring.

WARNING

HIGH VOLTAGE!
DISCONNECT ALL POWER BEFORE SERVICING OR INSTALLING THIS UNIT. MULTIPLE POWER SOURCES MAY BE PRESENT. FAILURE TO DO SO MAY CAUSE PROPERTY DAMAGE, PERSONAL INJURY OR DEATH.

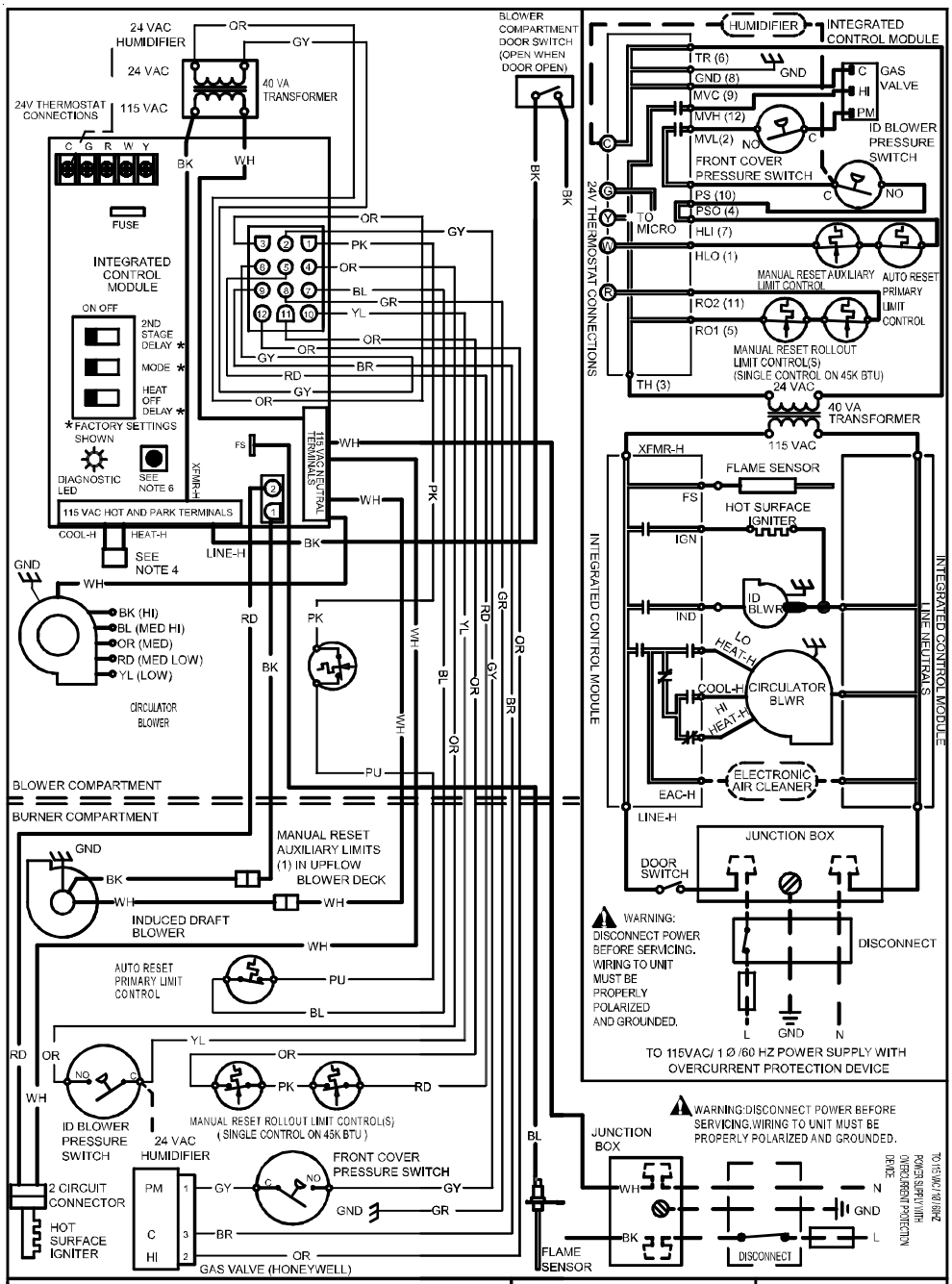

- STEADY ON = NORMAL OPERATION
- OFF = CONTROL FAILURE
- 1 FLASH = SYSTEM LOCKOUT (RETRIES EXCEEDED)
- 2 FLASHES = PRESSURE SWITCH STUCK CLOSED
- 3 FLASHES = PRESSURE SWITCH STUCK OPEN
- 4 FLASHES = OPEN HIGH LIMIT
- 5 FLASHES = FLAME SENSE WITHOUT GAS VALVE
- 6 FLASHES = OPEN ROLLOUT OR OPEN FUSE
- 7 FLASHES = LOW FLAME SIGNAL
- 8 FLASHES = CHECK IGNITER OR IMPROPER GROUNDING
- CONTINUOUS/RAPID FLASHES = REVERSED 115 VAC POLARITY

LOW VOLTAGE (24V)
LOW VOLTAGE FIELD
HI VOLTAGE (115V)
HI VOLTAGE FIELD
JUNCTION
TERMINAL
INTERNAL TO INTEGRATED CONTROL
PLUG CONNECTION

EQUIPMENT GND
FIELD GND
FIELD SPLICE
SWITCH (TEMP.)
IGNITER
SWITCH (PRESS.)
OVERCURRENT PROT. DEVICE

COLOR CODES:	
YL YELLOW	PK PINK
OR ORANGE	BR BROWN
PU PURPLE	WH WHITE
GN GREEN	BL BLUE
BK BLACK	GY GRAY
	RD RED

NOTES:
1. SET HEAT ANTICIPATOR ON ROOM THERMOSTAT AT 0.7 AMPS.
2. MANUFACTURERS SPECIFIED REPLACEMENT PARTS MUST BE USED WHEN SERVICING.
3. IF ANY OF THE ORIGINAL WIRE AS SUPPLIED WITH THE FURNACE MUST BE REPLACED, IT MUST BE REPLACED WITH WIRING MATERIAL HAVING A TEMPERATURE RATING OF AT LEAST 105°C. USE COPPER CONDUCTORS ONLY.
4. BLOWER SPEEDS SHOULD BE ADJUSTED BY INSTALLER TO MATCH THE INSTALLATION REQUIREMENTS SO AS TO PROVIDE THE CORRECT HEATING TEMPERATURE RISE AND THE CORRECT CFM (SEE SPEC SHEET FOR AIR FLOW CHART).
5. UNIT MUST BE PERMANENTLY GROUNDED AND CONFORM TO N.E.C. AND LOCAL CODES.
6. TO RECALL THE LAST 5 FAULTS, MOST RECENT TO LEAST RECENT, DEPRESS SWITCH FOR MORE THAN 2 SECONDS WHILE IN STANDBY (NO THERMOSTAT INPUTS)

0140F01115 REV. A

Wiring is subject to change. Always refer to the wiring diagram on the unit for the most up-to-date wiring.

SPECIAL INSTRUCTIONS FOR PRODUCTS INSTALLED IN THE STATE OF MASSACHUSETTS

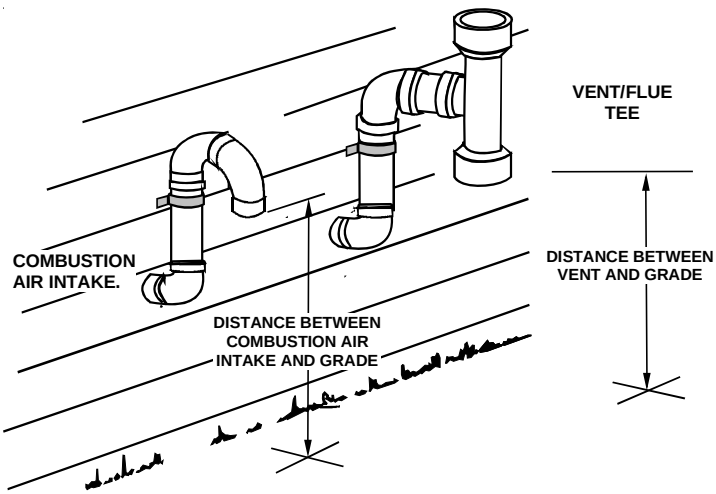

For all side wall horizontally vented gas fueled equipment installed in every dwelling, building or structure used in whole or in part for residential purposes, including those owned or operated by the Commonwealth and where the side wall exhaust vent termination is less than seven (7) feet above finished grade in the area of the venting, including but not limited to decks and porches, the following requirements shall be satisfied:

1. INSTALLATION OF CARBON MONOXIDE DETECTORS. At the time of installation of the side wall horizontal vented gas fueled equipment, the installing plumber or gasfitter shall observe that a hard wired carbon monoxide detector with an alarm and battery back-up is installed on the floor level where the gas equipment is to be installed. In addition, the installing plumber or gasfitter shall observe that a battery operated or hard wired carbon monoxide detector with an alarm is installed on each additional level of the dwelling, building or structure served by the side wall horizontal vented gas fueled equipment. It shall be the responsibility of the property owner to secure the services of qualified licensed professionals for the installation of hard wired carbon monoxide detectors
   a. In the event that the side wall horizontally vented gas fueled equipment is installed in a crawl space or an attic, the hard wired carbon monoxide detector with alarm and battery back-up may be installed on the next adjacent floor level.
   b. In the event that the requirements of this subdivision can not be met at the time of completion of installation, the owner shall have a period of thirty (30) days to comply with the above requirements; provided, however, that during said thirty (30) day period, a battery operated carbon monoxide detector with an alarm shall be installed.
2. APPROVED CARBON MONOXIDE DETECTORS. Each carbon monoxide detector as required in accordance with the above provisions shall comply with NFPA 720 and be ANSI/UL 2034 listed and IAS certified.
3. SIGNAGE. A metal or plastic identification plate shall be permanently mounted to the exterior of the building at a minimum height of eight (8) feet above grade directly in line with the exhaust vent terminal for the horizontally vented gas fueled heating appliance or equipment. The sign shall read, in print size no less than one-half (1/2) inch in size, **"GAS VENT DIRECTLY BELOW. KEEP CLEAR OF ALL OBSTRUCTIONS".**
4. INSPECTION. The state or local gas inspector of the side wall horizontally vented gas fueled equipment shall not approve the installation unless, upon inspection, the inspector observes carbon monoxide detectors and signage installed in accordance with the provisions of 248 CMR 5.08(2)(a)1 through 4.

EXEMPTIONS

The following equipment is exempt from 248 CMR 5.08(2)(a)1 through 4:

1. The equipment listed in Chapter 10 entitled "Equipment Not Required To Be Vented" in the most current edition of NFPA 54 as adopted by the Board; and
2. Product Approved side wall horizontally vented gas fueled equipment installed in a room or structure separate from the dwelling, building or structure used in whole or in part for residential purposes.

(c) MANUFACTURER REQUIREMENTS - GAS EQUIPMENT VENTING SYSTEM PROVIDED. When the manufacturer of Product Approved side wall horizontally vented gas equipment provides a venting system design or venting system components with the equipment, the instructions provided by the manufacturer for installation of the equipment and the venting system shall include:

1. Detailed instructions for the installation of the venting system design or the venting system components; and
2. A complete parts list for the venting system design or venting system.

(d) MANUFACTURER REQUIREMENTS - GAS EQUIPMENT VENTING SYSTEM NOT PROVIDED. When the manufacturer of a Product Approved side wall horizontally vented gas fueled equipment does not provide the parts for venting the flue gases, but identifies "special venting systems", the following requirements shall be satisfied by the manufacturer:

1. The referenced "special venting system" instructions shall be included with the appliance or equipment installation instructions; and
2. The "special venting systems" shall be Product Approved by the Board, and the instructions for that system shall include a parts list and detailed installation instructions.

(e) A copy of all installation instructions for all Product Approved side wall horizontally vented gas fueled equipment, all venting instructions, all parts lists for venting instructions, and/or all venting design instructions shall remain with the appliance or equipment at the completion of the installation.

THIS PAGE LEFT INTENTIONALLY BLANK

THIS PAGE LEFT INTENTIONALLY BLANK

THIS PAGE LEFT INTENTIONALLY BLANK

NOTE: SPECIFICATIONS AND PERFORMANCE DATA LISTED HEREIN ARE SUBJECT TO CHANGE WITHOUT NOTICE.

Quality Makes the Difference!

"All of our systems are designed and manufactured with the same high quality standards regardless of size or efficiency. We have designed these units to significantly reduce the most frequent causes of product failure. They are simple to service and forgiving to operate. We use quality materials and components. Finally, every unit is run tested before it leaves the factory. That's why we know. . . **There's No Better Quality."**

Visit our web sites at ***www.goodmanmfg.com or www.amana-hac.com*** *for information on:*

- Products
- Warranties
- Customer Services
- Parts
- Contractor Programs and Training
- Financing Options

© 2006-2013 Goodman Manufacturing Company, L.P.