*PG1660 GAS-FIRED PACKAGED UNIT
USER'S INFORMATION

WARNING

IF THE INFORMATION IN THESE INSTRUCTIONS IS NOT FOLLOWED EXACTLY, A FIRE OR EXPLOSION MAY RESULT CAUSING PROPERTY DAMAGE, PERSONAL INJURY OR LOSS OF LIFE.

-TO PREVENT THE RISK OF PROPERTY DAMAGE, PERSONAL INJURY OR DEATH, DO NOT STORE COMBUSTIBLE MATERIALS OR USE GASOLINE OR OTHER FLAMMABLE LIQUIDS OR VAPORS IN THE VICINITY FO THIS APPLIANCE.

- WHAT TO DO IF YOU SMELL GAS:

- DO NOT TRY TO LIGHT ANY APPLIANCE.
- DO NOT TOUCH ANY ELECTRICAL SWITCH. DO NOT USE ANY PHONE IN YOUR BUILDING.
- IMMEDIATELY CALL YOUR GAS SUPPLIER FORM A NEIGHBOR'S PHONE. FOLLOW THE GAS SUPPLIER'S INSTRUCTIONS.
- IF YOU CANNOT REACH YOUR GAS SUPPLIER, CALL THE FIRE DEPARTMENT.

INSTALLATION AND SERVICE MUST BE PERFORMED BY A QUALIFIED INSTALLER, SERVICE AGENCY OR THE GAS SUPPLIER. ONLY PERSONNEL THAT HAVE BEEN TRAINED TO INSTALL, ADJUST, SERVICE OR REPAIR (HEREINAFTER, "SERVICE") THE EQUIPMENT SPECIFIED IN THIS MANUAL SHOULD SERVICE THE EQUIPMENT. THE MANUFACTURER WILL NOT BE RESPONSIBLE FOR ANY INJURY OR PROPERTY DAMAGE ARISING FROM IMPROPER SERVICE OR SERVICE PROCEDURES. IF YOU SERVICE THIS UNIT, YOU ASSUME RESPONSIBILITY FOR ANY INJURY OR PROPERTY DAMAGE WHICH MAY RESULT. IN ADDITION, IN JURISDICTIONS THAT REQUIRE ONE OR MORE LICENSES TO SERVICE THE EQUIPMENT SPECIFIED IN THIS MANUAL, ONLY LICENSED PERSONNEL SHOULD SERVICE THE EQUIPMENT. IMPROPER INSTALLATION, ADJUSTMENT, SERVICING OR REPAIR OF THE EQUIPMENT SPECIFIED IN THIS MANUAL, OR ATTEMPTING TO INSTALL, ADJUST, SERVICE OR REPAIR THE EQUIPMENT SPECIFIED IN THIS MANUAL WITHOUT PROPER TRAINING MAY RESULT IN PRODUCT DAMAGE, PROPERTY DAMAGE, PERSONAL INJURY OR DEATH.

C ETL US LISTED Intertek

Installer *- Affix this manual, Installation Guide, and Warranty adjacent to the appliance.*

Owner *- Read and keep all product literature in a safe place for future reference.*

WARNING

SHOULD OVERHEATING OCCUR, OR THE GAS SUPPLY FAIL TO SHUT OFF, SHUT OFF THE MANUAL GAS VALVE TO THE FURNACE BEFORE SHUTTING OFF THE ELECTRICAL SUPPLY.

WARNING

PRODUCT CONTAINS FIBERGLASS WOOL. DISTURBING THE INSULATION IN THIS PRODUCT DURING INSTALLATION, MAINTENANCE, OR REPAIR WILL EXPOSE YOU TO FIBERGLASS WOOL. BREATHING THIS MAY CAUSE LUNG CANCER. FIBERGLASS WOOL MAY ALSO CAUSE RESPIRATORY, SKIN, AND EYE IRRITATION. TO REDUCE EXPOSURE OR FOR FURTHER INFORMATION, CONSULT MATERIAL SAFETY DATA SHEETS AVAILABLE FROM ADDRESS SHOWN BELOW.

WARNING

TO AVOID PROPERTY DAMAGE, PERSONAL INJURY OR DEATH, DO NOT USE THIS FURNACE IF ANY PART OF THE FURNACE HAS BEEN UNDER WATER. IMMEDIATELY CALL A QUALIFIED SERVICE TECHNICIAN TO INSPECT THE FURNACE AND TO REPLACE ANY PART OF THE CONTROL SYSTEM AND ANY GAS CONTROL HAVING BEEN UNDER WATER.

PROP 65 WARNING
FOR CALIFORNIA CONSUMERS

WARNING

Cancer and Reproductive Harm -
www.P65Warnings.ca.gov

0140M00517-A

RECOGNIZE THIS SYMBOL AS A SAFETY PRECAUTION.

Our continuing commitment to quality products may mean a change in specifications without notice.

HI-3002A
02/2019

© 2016, 2019 Goodman Company, L.P.
5151 San Felipe St., Suite 500, Houston, TX 77056
www.goodmanmfg.com • www.amana-hac.com

Amana is a registered trademark of Maytag Corporation or its related companies and is used under license. All rights reserved.

Introduction

The intent of this bulletin is to acquaint the user with some of the mechanical features and adjustments of the rooftop gas fired air conditioning units. In addition, the information contained in this manual is designed to identify any hazards and to serve as a guide to the user in the event of any malfunctions.

DO'S AND DO NOT'S

DO read the User's Manual and Installation Instructions before operating the unit.

DO have your heating and cooling unit serviced at least once a year. It is strongly recommended that the unit be inspected and serviced by a qualified service agency at the beginning of each heating and cooling season.

NOTE: *Additional periodic maintenance is recommended. Refer to "Maintenance" section.*

DO NOT attempt to alter the unit.

DO NOT block or obstruct the unit air inlets or outlets.

DO NOT tamper with the internal fan and limit control mechanisms.

DO NOT use any type of fuel other than indicated on the unit's nameplate.

Safety

Dear Owner, please recognize the following safety information. This information will alert you to the potential for personal injury.

⚠ WARNING

TO AVOID POSSIBLE EQUIPMENT DAMAGE, PERSONAL INJURY, FIRE OR DEATH, THE FOLLOWING INSTRUCTIONS MUST BE OBSERVED REGARDING UNIT LOCATION, AIR REQUIREMENTS AND OPERATING PROCEDURES.

⚠ WARNING

HEATING UNIT SHOULD NOT BE UTILIZED WITHOUT REASONABLE, ROUTINE, INSPECTION, MAINTENANCE AND SUPERVISION. IF THE BUILIDNG IN WHICH ANY SUCH DEVICE IS LOCATED WILL BE VACANT, CARE SHOULD BE TAKEN THAT SUCH DEVICE IS ROUTINELY INSPECTED, MAINTAINED AND MONITORED. IN THE EVENT THAT THE BUILDING MAYBE EXPOSED TO FREEZING TEMPERATURES AND WILL BE VACANT, ALL WATER-BEARING PIPES SHOULD BE DRAINED, THE BUILDING SHOULD BE PROPERLY WINTERIZED, AND THE WATER SOURCE CLOSED. IN THE EVENT THAT THE BUILDING MAY BE EXPOSED TO FREEZING TEMPERATURES AND WILL BE VACANT, ANY HYDRONIC COIL UNITS SHOULD BE DRAINED AS WELL AND, IN SUCH CASE, ALTERNATIVE HEAT SOURCES SHOULD BE UTILIZED.

Important Note To The Owner

Your warranty certificate is supplied with the unit. Read the warranty carefully and note what is covered. Keep the warranty certificate in a safe place, so you can find it, if necessary.

Before using this manual, check the serial plate for proper model identification.

The installation and servicing of this equipment must be performed by qualified, experienced technicians only.

Safety Instructions

⚠ WARNING

THIS FURNACE IS EQUIPPED WITH AN ELECTRIC IGNITION. DO NOT ATTEMPT TO LIGHT THE FURNACE MANUALLY WITH A MATCH OR OTHER LIGHTING MEANS.

Unit Location

These units are designed for outdoor installation only, either on a slab just above ground level or on a rooftop. The unit should be protected from access by unauthorized persons or children.

This unit is approved only for an outdoor installation. See the installation instructions for the required clearances to the unit. It is important that safety measures are taken in the surrounding area of the unit.

Gutters or deflectors must be installed on the roof to prevent water from shedding on the unit.

1. An area must be available to reach the unit in a clear and unobstructed path.
2. The unit area and the vicinity of any other gas appliances must be kept clear and free of combustible materials, gasoline, and other flammable vapors and liquids. Also, do not store or use flammable items such as paint, varnish, or lacquer in the area.
3. The combustion air supply must not be contaminated by products containing chlorine or fluorine, as they could corrode the heat exchanger. If you need further information on this subject, contact your installing dealer or another qualified servicer.
4. Familiarize yourself with the controls that turn off the gas and electrical power to the unit.
5. Establish a regular service and maintenance schedule to ensure efficient and safe operation of the unit.
6. The unit must be placed where no runoff water from higher ground can collect in the unit.

Air Requirements

WARNING

To avoid property damage, personal injury or death, sufficient fresh air must be supplied for proper combustion and ventilation of flue gases.

The unit requires air for combustion of the gas. Therefore, DO NOT block or obstruct the air or vent openings to the furnace. Keep the area surrounding the unit free from debris and snow. A vent stack is not required, and must never be used.

WARNING

Personal Injury or Death from asphyxiation can result from exposure to carbon monoxide. Carbon monoxide or "CO" is a colorless and odorless gas produced when fuel is not burned completely or when the flame does not receive sufficient oxygen. Be aware of these air starvation signals which indicate conditions that may result in carbon monoxide or that carbon monoxide may be present:

1. **Headaches-Nausea-Dizziness, Flu-Like Symptoms.**
2. **Excessive humidity-heavily frosted windows or a moist "clammy" feeling in the home.**
3. **Smoke from a fireplace will not draw up the chimney.**
4. **Flue gases that will not draw up the appliance vent pipe.**

WARNING

To prevent property damage or serious personal injury due to fire or explosion caused by a propane gas leak, install a gas detecting warning device.

If the propane gas unit is installed in an excavated area or a confined space, a warning device is required due to:

- **Propane gas is heavier than air and any leaking gas can settle in any low areas or confined spaces.**
- **Propane gas odorant may fade, making the gas undetectable except with a warning device.**

WARNING

An undetected gas leak will create a danger of explosion or fire. If the presence of gas is suspected, follow the instructions on the cover of this manual. Failure to do so could result in SERIOUS PERSONAL INJURY OR DEATH.

Thermostat

This unit will not operate properly without a good quality, correctly installed thermostat. It is very important that the thermostat be located where it can best "sense" the average room temperature. Be sure the thermostat is not exposed to hot or cold drafts or to hot or cold spots on the wall, such as those received from outside walls, walls with pipes inside, or from openings into the attic.

No matter the type or style, thermostat operation is basically the same. The most widely used types will control both heating and cooling functions and will have a Fan Switch with Auto and ON settings. On Auto, the Circulating Air Blower will cycle on/off, but if switched to ON it will run constantly.

For Dual Fuel units, a Dual Fuel thermostat with an outdoor temperature sensor is recommended for optimal operation.

IMPORTANT NOTE: To avoid the possibility of damage to the unit heat exchanger, do not set the thermostat fan switch to ON (constant fan operation) during the heating season without first consulting the installer of the unit or another qualified servicer.

There are thermostats that automatically switch from Heating to Cooling, or with night setbacks. The night setback, or multiple setback type, will lower the temperature at night or during the day when the building is unoccupied.

Should the gas supply fail to shut off or if overheating occurs, shut off the gas valve to the furnace before shutting off the electrical supply.

En cas de temperature excessive, ou s'il est impossible de couper l'alimentation en gaz, termer le robinet manuel d'alimentation en gaz du generateur d'air chaud avant de couper l'alimentation electrique.

Do not use this furnace if any part has been under water. A flood-damaged furnace is extremely dangerous. Attempts to use the furnace can result in fire or explosion. A qualified service agency should be contacted to inspect the furnace and to replace all gas controls, control systemarts, electrical parts that have been wet or the furnace if deemed necessary."

Ne pas utiliser cet appareil de chauffage s'il a ete en partie immerge dans l'eau. Un appareil de chauffage endommage par une inondation est extremement dangereux. S'il est utilise, un incendie ou une explosion peut se produire. Il faut avoir recours a une entreprise d'entretien qualifiee pour faire inspecter l'appareil de chauffage etemplacer toutes les commandes de gaz, lesieces du systeme de controle, les pieces electriques qui sont entrees en contact avec l'eau ou l'appareil de chauffage lui-meme, si cela est juge necessaire.

PROPANE (LP) GAS INSTALLATIONS ONLY

For units operating on propane gas, please review the following warnings before use.

WARNING

TO AVOID PROPERTY DAMAGE, PERSONAL INJURY OR DEATH DUE TO EXPLOSION OR FIRE, INSTALL A GAS DETECTING WARNING DEVICE. SINCE THE ODORANT IN PROPANE GAS CAN BE REDUCED BY IRON OXIDE (RUST), A GAS DETECTING WARNING DEVICE IS THE ONLY RELIABLE METHOD TO DETECT PROPANE GAS LEAKS.

Operating Instructions

WARNING

ELECTRICAL COMPONENTS ARE CONTAINED IN BOTH COMPARTMENTS. TO AVOID PERSONAL INJURY, ELECTRICAL SHOCK OR DEATH, DO NOT REMOVE ANY INTERNAL COMPARTMENT COVERS. CONTACT A QUALIFIED SERVICER AT ONCE IF AN ABNORMAL CONDITION IS NOTICED.

WARNING

AN UNDETECTED GAS LEAK CAN CREATE A DANGER OF EXPLOSION OR FIRE. THE UNIT AND ITS GAS CONNECTIONS MUST BE LEAK TESTED BEFORE PLACING IN OPERATION.

WARNING

HIGH VOLTAGE!

DISCONNECT ALL POWER BEFORE INSTALLING OR SERVICING. MULTIPLE POWER SOURCES MAY BE PRESENT. FAILURE TO DO SO MAY CAUSE PROPERTY DAMAGE, PERSONAL INJURY, OR DEATH.

WARNING

EXCEPT DURING BRIEF PERIODS WHEN GAS PERSSURES ARE BEING MEASURED BY QUALIFIED SERVICE PERSONNEL, THE BURNER ACCESS PANEL MUST BE IN PLACE AT ALL TIMES WHEN THE UNIT IS OPERATING.

WARNING

FIRE, EXPLOSION OR CARBON MONOXIDE POISONING HAZARD
Failure to replace with proper control could result in fire, explosion or carbon monoxide poisoning.
This appliance uses a NEGATIVE PRESSURE REGULATED gas control. Replace ONLY with the same model number or as specified by the manufacturer.

AVERTISSMENT

RISQUE D'INCENDIE, D'EXPLOSION OU D'INTOXICATION AU MONOXYDE DE CARBONE
Le rem placement de ce dispositif par une commande non conforme risque de provoquer un incendie, une explosion ou une intoxication au monoxyde de carbone. Cet appareil utilise une commande de gaz A REGULATION DE PRESSION NEGATIVE.
La remplacer UNIQUEMENT par un dispositif portant le meme numero de modele ou conforme aux specifications du fabricant.

WARNING

FIRE OR EXPLOSION HAZARD
Failure to follow safety warnings exactly could result in serious injury, death or property damage.
-Do not store or use gasoline or other flammable vapors and liquids in the vicinity of this or any other appliance.
-WHAT TO DO IF YOU SMELL GAS
- Do not try to light any appliance.
- Do not touch any electrical switch; do not use any phone in your building.
- Leave the building immediately.
- Immediately call your gas supplier from a neighbor's phone. Follow the gas suppliers instructions.
- If you cannot reach your gas supplier, call the fire department.
- Installation and service must be performed by a qualified installer, service agency or the gas supplier.

AVERTISSMENT

RISQUE D'INCENDIE OU D'EXPLOSION
Si les consignes de securite ne sont pas suivies a la lettre, cela peut entrainer la mort, de graves blessures ou des dommages materiels.
-Ne pas entreposer ni utiliser d'essence ni autres vapeurs ou liquides inflammables a proximite de cet appareil ou de tout autre appareil.
- QUE FAIRE SI UNE ODEUR DE GAZ EST DETECTEE
- Ne mettre en marche aucun appareil.
- Ne toucher aucun interrupteur electrique; ne pas utiliser de telephone dans le batiment.
- Quitter le batiment immediatement.
- Appeler immediatement le fournisseur de gaz en utilisant le telephone d'un voisin. Suivre les instructions du fournisseur de gaz.
- Si le fournisseur de gaz n'est pas accessible, appeler le service d'incendie.
- L'installation et l'entretien doivent etre effectues par un installateur ou une entreprise d'entretien qualifie, ou le fournisseur de gaz.

WARNING

CARBON MONOXIDE POISONING HAZARD
Failure to follow instructions could result in severe personal injury or death due to carbon-monoxide poisoning, if combustion products infiltrate into the building.
Check that all openings in the outside wall around the vent (and air intake) pipe(s) are sealed to prevent infiltration of combustion products into the building.
Check the furnace vent (and air intake) terminal(s) are not obstructed in any way during all seasons.

AVERTISSMENT

RISQUE D'INTOXICATION AU MONOXYDE DE CARBONE
Si ces directives ne sont pas suives, cela peut entrainer des blessures graves ou une intoxication au monoxyde de carbone pouvant causer la mort, si des produits de combustion s'infiltrent dans le batiment.
Verifier que toutes les ouvetures pratiquees dans le mur exterieur autour du ou des tuyaux d'event (et de la prise d'air) sont scellees de maniere a empecher !'infiltration de produits de combustion dans le batiment.
Veiller ace que la ou less sorties de l'event de l'appareil de chauffage (et la prise d'air) ne soient, en aucune fa• on, obstruees, quelle que soit la saison.

Heating

Start Up

To put your unit into operation, follow the steps listed below.

1. Close the external manual gas shutoff valve.
2. Turn off the electrical power to the unit.
3. Set the room thermostat to the lowest possible setting.
4. Remove the heat exchanger door on the side of the unit by removing screws.
5. This unit is equipped with an ignition device which automatically lights the burner. Do not try to light the burner by hand.
6. Move the gas control switch to the OFF position. Do not use excessive force.
7. Wait five minutes to clear out any gas. Then smell for gas, including near the floor as some types of gas are heavier than air.
8. If you smell gas following the five minute waiting period in step 7, immediately follow the instructions on the cover of this manual. If you do not smell gas after five minutes, move or rotate the gas control switch to the ON position. The switch should turn easily. Do not use excessive force.
9. Reinstall the burner compartment door.
10. Open the external manual gas shutoff valve.
11. Turn on the electrical power to the unit.
12. Adjust the thermostat to a setting above room temperature.
13. After the burners are lit, set the thermostat to desired temperature.

Heating Shut Down

To shut down operation, follow the steps listed below.

1. Set the thermostat to the lowest setting.
2. Turn OFF electrical power to the unit.
3. Remove the heat exchanger door on the side of the unit by removing screws.
4. Move the gas control switch to the OFF position. Do not use excessive force.
5. Close the external manual gas shutoff valve.
6. Reinstall the heat exchanger door.
7. If cooling and/or air circulation is desired, turn ON the electrical power.

Cooling Operation

Cooling operation may be obtained as follows:

1. Place the room thermostat selector switch in the COOL position (or AUTO, if available, and if automatic changeover from cooling to heating is desired).
2. Set the room thermostat to the desired temperature.
3. If cooling system does not energize, wait five minutes. The system startup may be delayed by the short-cycle protector feature of the ignition control board. Check the manual reset devices on the rollout limit, as described in this manual.

Unit Start-Up

1. **STOP!** Read all safety information.
2. Close the external manual gas shut-off valve.
3. Turn off all electric power to the disconnect switch.
4. Set thermostat or heat control to lowest setting.
5. Remove the burner door.
6. This appliance is equipped with an ignition device which automatically lights the burners. DO NOT try to light the burner by hand.
7. Turn gas control switch "OFF". *Do not force.*
8. Wait five (5) minutes to clear out any gas. Then smell for gas. If you then smell gas, STOP! Follow the instructions on the cover of this manual. If you do not smell gas after five minutes, move the unit gas valve ON/OFF switch to the ON position.
9. Replace burner door. **DO NOT** omit any screws when replacing panel.
10. Open the external manual gas shut-off valve.
11. Turn on all electric power to the unit.
12. Set thermostat or controller to desired setting.
13. If the appliance will not operate, follow the instructions "Unit Shut Down" and call your service technician or gas supplier.

Unit Shut Down

WARNING

HIGH VOLTAGE!

Disconnect ALL power before installing or servicing. Multiple power sources may be present. Failure to do so may cause property damage, personal injury, or death.

1. Set the thermostat or controller to lowest setting or turn off power at switch.
2. Turn off all electrical power to the appliance if service is to be performed.
3. Remove burner door.
4. Turn gas control switch to "OFF".
5. Replace burner door.

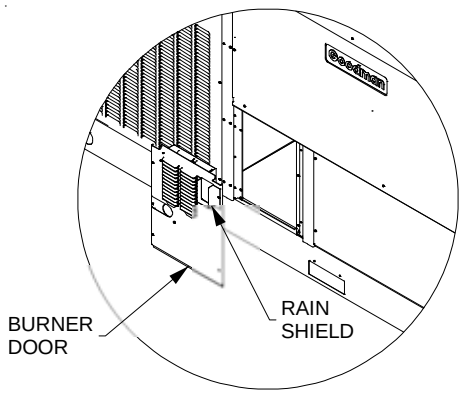

BURNER DOOR PANEL

Lockout Reset

A unit lockout is characterized by a non-functioning unit (circulator blower may be running continuously) providing a one flash diagnostic LED code. Lockout results when a unit control detects abnormal conditions. If the unit is in "lockout", it may be reset by any of the following methods:

1. One hour automatic reset. Control will automatically reset itself and attempt to resume normal operations following a one hour lockout period.
2. Power interruption. Interrupt line voltage power to the unit for between 0 and 20 seconds.

If the condition which originally caused the lockout still exists, the control will return to lockout. If your unit frequently locks out, a problem exists which must be corrected. Contact a qualified servicer.

Safety Circuits

A number of safety circuits are employed to ensure safe and proper unit operation. These circuits serve to control any potential safety hazards and, as inputs in the monitoring and diagnosis of abnormal operation.

WARNING

If the secondary limit control should open, the reason must be determined before the control resets. The electrical power must be disconnected before any panel is removed or maintenance is performed.

Secondary Limit

The secondary limit control is located on the blower housing and monitors blower compartment temperatures. It is a normally closed (electrically), automatic reset, temperature activated sensor. This limit guards against overheating as a result of insufficient conditioned air passing over the heat exchanger. It deenergizes the gas valve if the blower fails.

NOTE: If the power to the unit is interrupted during the heating cycle, it may cause the secondary limit to trip. Once the blower compartment temperature drops below the limit reset temperature, the limit will automatically reset.

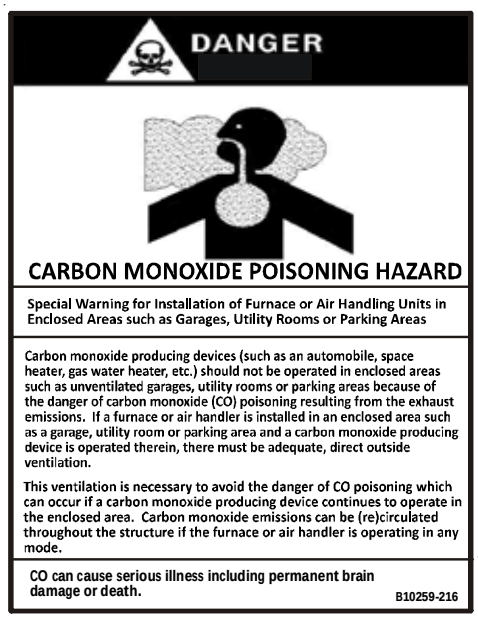

Rollout Limit

WARNING

THE CAUSE OF THE ROLLOUT PROTECTION DEVICE OPENING MUST BE INVESTIGATED BY A QUALIFIED SERVICER BEFORE ANY ATTEMPT IS MADE TO RESET THE ROLLOUT PROTECTION DEVICE AND TURN THE UNIT BACK ON. THE ELECTRICAL POWER MUST BE DISCONNECTED BEFORE EITHER FRONT PANEL IS REMOVED.

The rollout limit is a normally-closed (electrically), manual-reset, temperature-activated sensor. It is mounted on the burner bracket and monitors the burner flame. If there is an improper draw of burner flames into the heat exchanger, the rollout limit will detect it and shut off gas flowing to the burners. Contact a qualified servicer to check the unit before resetting this device.

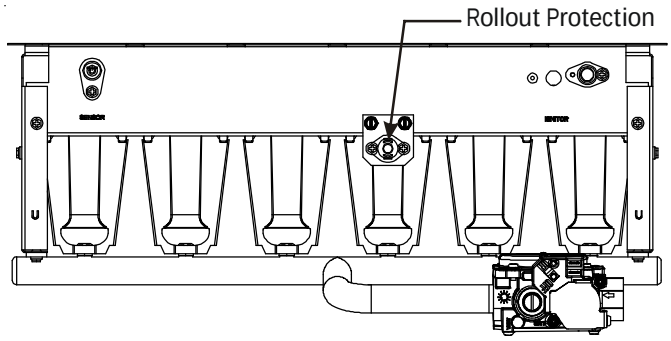

Rollout Protection on Burner Bracket

Compressor Protection Devices

This gas/electric package unit includes components which are designed to protect the compressor against abnormal operating conditions.

WARNING

HIGH VOLTAGE
DISCONNECT ALL POWER BEFORE INSPECTING OR SERVICING THE UNIT. MULTIPLE POWER SOURCES MAY BE PRESENT. FAILURE TO DO SO MAY CAUSE PROPERTY DAMAGE, PERSONAL INJURY OR DEATH. SINCE ALL THE COMPRESSOR PROTECTION DEVICES RESET AUTOMATICALLY, THE CONTACTOR AND OUTDOOR FAN MAY BE ENERGIZED WHEN RESET.

NOTE: The operation of the indoor blower will not be affected by any compressor protection devices.
If, during a call for cooling, the indoor fan runs and circulates room temperature air while the compressor and outdoor fan do not operate:

1. Wait five minutes, as a protection device may be holding the compressor off.
2. Check the room thermostat to see if it is correctly set.
3. If the room thermostat is correctly set, call a qualified servicer to determine if one of the compressor protection devices has opened.

Short-Cycle Protector

A short-cycle protector is built into the ignition control. Each time the compressor is off for less than 3 minutes, the short-cycle protector will delay compressor startup for up to 3 minutes. This protects the compressor from improper operation.

On Dual Fuel units, the short-cycle protector will delay the compressor 5 minutes.

NOTE: These units are not designed to provide mechanical cooling at outdoor temperatures below 50°F. If low ambient cooling is needed, consult a qualified servicer.

Igniter

The unit has an electronic ignition device which lights the burners automatically. Never try to light the burners by hand. It also has an induced draft blower to exhaust combustion products.

Indoor Air Circulator Blower

Keep the blower access door panel in place except for inspection and maintenance.

Routine Maintenance

WARNING

HIGH VOLTAGE
DISCONNECT ALL POWER BEFORE INSPECTING OR SERVICING THE UNIT. MULTIPLE POWER SOURCES MAY BE PRESENT. FAILURE TO DO SO MAY CAUSE PROPERTY DAMAGE, PERSONAL INJURY OR DEATH. SINCE ALL THE COMPRESSOR PROTECTION DEVICES RESET AUTOMATICALLY, THE CONTACTOR AND OUTDOOR FAN MAY BE ENERGIZED WHEN RESET.

WARNING

TO AVOID PERSONAL INJURY OR DEATH DUE TO EXPLOSION OR FIRE, THE FOLLOWING PROCEDURES MUST BE FOLLOWED EXACTLY IN SEQUENCE BEFORE INSPECTING THE UNIT:
- **TURN OFF GAS BY CLOSING EXTERNAL GAS SHUTOFF VALVE TO THE UNIT.**
- **TURN OFF ELECTRICAL POWER BY OPENING UNIT POWER DISCONNECT.**
- **IF THE UNIT HAS BEEN OPERATING, WAIT 15 MINUTES FOR IT TO COOL.**

Maintenance is to be performed by a qualified service technician only. User maintenance is to be restricted to frequent air filter changes and to ensure the warnings and notices found elsewhere in this manual be followed. We recommend that at a minimum system maintenance be performed by a qualified service technician prior to the beginning of each heating season, and if equipped with air conditioning prior to that season.

WARNING

PERSONAL INJURY OR DEATH MAY RESULT FROM IMPROPER MAINTENANCE PERFORMED BY UNTRAINED PERSONNEL. CALL YOUR INSTALLING DEALER OR OTHER QUALIFIED SERVICE COMPANIES TO PERFORM THE MAINTENANCE INSPECTION.

WARNING

TO AVOID PERSONAL INJURY OR DEATH DUE TO ELECTRICAL SHOCK, DISCONNECT THE ELECTRICAL POWER BEFORE PERFORMING ANY MAINTENANCE.

ANNUAL INSPECTION (QUALIFIED SERVICER ONLY)

The unit should be inspected by a qualified installer, or service agency at least once per year. This check should be performed at the beginning of the heating season. This will ensure that all components are in proper working order and that the system functions appropriately. Pay particular attention to the following items. Repair or service as necessary by a qualified service agency.

- The physical support of the unit should be sound without sagging, cracks, etc., around the base to provide a seal between the support and the base.
- Flue pipe system. Check for blockage and/or leakage. Check the outside termination and the connections at and internal to the furnace.
- Combustion air intake pipe system (where applicable). Check for blockage and/or leakage. Check the outside termination and the connection at the furnace.
- Heat exchanger. Check for corrosion and/or buildup within the heat exchanger passageways.
- Burners. Check for proper ignition, burner flame, and flame sense.
- Wiring. Inspect electrical connections for tightness and/or corrosion. Check wires for damage.
- Filters. Check that filters are clean and in the proper placement in the unit or duct system.

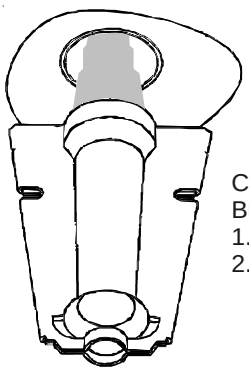

Check the
Burner Flames for:
1. Stable, soft and blue.
2. Not curling, floating or lifting off.

BURNER FLAME

WARNING

TO AVOID PERSONAL INJURY OR FIRE, MINIMUM CLEARANCES TO COMBUSTIBLE SURFACES MUST BE FOLLOWED.

CLEAN OUTSIDE COIL (QUALIFIED SERVICER ONLY)

The coil with the outside air flowing over it should be inspected annually and cleaned as frequently as necessary to keep the finned areas free of debris.

WARNING

TO AVOID PERSONAL INJURY OR DEATH DUE TO ELECTRICAL SHOCK, DISCONNECT THE ELECTRICAL SWITCH BEFORE CLEANING THE COIL(S).

CONDENSER AND INDUCED DRAFT MOTORS (QUALIFIED SERVICER ONLY)

Bearings on the condenser motor(s) and the combustion fan motor are permanently lubricated. No additional oiling is required.

LUBRICATION (QUALIFIED SERVICER ONLY)

Some indoor blower shaft bearings and supply fan motors have grease fittings that should be lubricated during normal maintenance checks.

Filters

WARNING

To avoid property damage, personal injury or death, disconnect electrical power before removing filters. Never operate furnace without a filter installed because dust and lint will build up on internal parts resulting in loss of efficiency, equipment damage and possible fire.

IMPORTANT NOTE: Never operate unit without a filter installed as dust and lint will build up on internal parts resulting in loss of efficiency, equipment damage and possible fire.

An indoor air filter must be used with your comfort system. A properly maintained filter will keep the indoor coil of your comfort system clean. A dirty coil could cause poor operation and/or severe equipment damage.

Every application may require a different frequency of replacement of dirty filters. Filters must be inspected, cleaned or changed every three months or as required. As an owner, it is your personal responsibility to keep air filters clean.

If you need assistance, contact the installer of your unit or another qualified servicer.

Become familiar with filter location and procedures for removing, cleaning and replacing them. The installer of your unit can tell you where your filter(s) are, and how to clean or replace them.

Filters Removal

Remove the filter access panel on return air side of the unit then remove filters.

Filter Cleaning and/or Replacement

Remember to **always** replace the panels and screws before operating the unit.

Filters supplied with the units are the disposable type and must be replaced with the same size and same type of filters. Refer to your unit Installation Instructions for filter sizes.

When reinstalling filters, be careful to maintain correct airflow direction.

Cabinet Finish Maintenance

Use a fine grade automotive wax on the cabinet finish to maintain the finish's original high luster. This is especially important in installations with extended periods of direct sunlight.

NOTE: If safety labels are missing or illegible, contact the installing dealer or our Customer Service Department for ordering information.

2 - Stage Gas Valve

FOR YOUR SAFETY READ BEFORE OPERATING

WARNING If you do not follow these instructions exactly, a fire or explosion may result causing property damage, personal injury or loss of life.

A. This appliance does not have a pilot. It is equipped with an ignition device which automatically lights the burners. Do not try to light the burners by hand.

B. BEFORE OPERATING smell around the appliance area for gas. Be sure to smell next to the floor because some gas is heavier than air and will settle on the floor.

WHAT TO DO IF YOU SMELL GAS

- Do not try to light any appliance.
- Do not touch any electric switch; do not use any telephone in your building.
- Immediately call your supplier from a neighbor's phone. Follow the gas suppliers instructions.
- If you cannot reach your gas supplier, call the fire department.

C. Use only your hand to move the gas control switch or knob. Never use tools. If the gas control switch or knob will not operate, don't try to repair it, call a qualified service technician. Force or attempted repair may result in a fire or explosion.

D. Do not use this appliance if any part has been under water. Immediately call a qualified service technician to inspect the appliance and to replace any part of the control system and any gas control which has been under water.

WARNING: Improper installation, adjustment, alteration, service or maintenance can cause injury or property damage. Refer to the user's information manual provided with this furnace. For assistance or additional information consult a qualified installer, service agency or the gas supplier.

This furnace must be installed in accordance with the manufacturers instructions and local codes. In the absence of local codes, follow the National Fuel Gas Code, ANSI Z223.1.

OPERATING INSTRUCTIONS

1. STOP! Read the safety information above on this label.
2. Set the thermostat to lowest setting.
3. Turn off all electric power to the appliance.
4. This appliance is equipped with an automatic ignition system which automatically lights the burners. Do not try to light the burners by hand.
5. Remove control access panel.
6. Move the gas control switch or knob to "OFF".

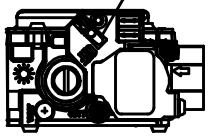

7. Wait five (5) minutes to clear out any gas. If you then smell gas, STOP! Follow "B" in the safety information above on this label. If you don't smell gas, go to the next step.
8. Move the gas control switch or knob to "ON".
9. Replace control access panel.
10. Turn on all electric power to the appliance.
11. Set the thermostat to the desired setting.
12. If the appliance will not operate, follow the instructions "To Turn Off Gas To Appliance" and call your service technician or gas supplier.

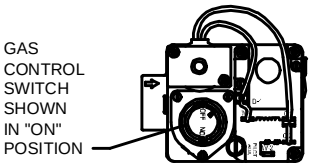

For outdoor installation only.

WARNING: If not installed, operated and maintained in accordance with the manufacturer's instructions, this product could expose you to substances in fuel combustion which can cause death or serious illness and which are known to the State of California to cause cancer, birth defects or other reproductive harm. This product contains fiberglass insulation. Fiberglass insulation contains a chemical known by the State of California to cause cancer.

TO TURN OFF GAS TO APPLIANCE

1. Set the thermostat to its lowest setting.
2. Turn off all electric power to the appliance if service is to be performed.
3. Remove control access panel.
4. Move the gas control switch or knob to "OFF". Do not force.
5. Replace control access panel.

FOR YOUR SAFETY Do not store or use gasoline or other flammable vapors and liquids in the vicinity of this or any other appliance.

B14933-239

WARNING

HAZARD OF ELECTRIC SHOCK.

DISCONNECT THE ELECTRIC POWER BEFORE SERVICING.

ADVERTISSEMENT

DECONNECTER DU CIRCUIT D'ALIMENTATION ELECTRIQUE AVANT L'ENTRETIEN.

ADVERTENCIA

PELIGRO DE CHOQUE ELECTRÍCO.

DESCONECTE LA POTENCIA ELECTRICA ANTES DEL MANTENIMIENTO.

B14933-152A

WARNING

HEATING UNITS SHOULD NOT BE UTILIZED WITHOUT REASONABLE, ROUTINE, INSPECTION, MAINTENANCE AND SUPERVISION. IF THE BUILDING IN WHICH ANY SUCH DEVICE IS LOCATED WILL BE VACANT, CARE SHOULD BE TAKEN THAT SUCH DEVICE IS ROUTINELY INSPECTED, MAINTAINED AND MONITORED. IN THE EVENT THAT THE BUILDING MAY BE EXPOSED TO FREEZING TEMPERATURES AND WILL BE VACANT, ALL WATER-BEARING PIPES SHOULD BE DRAINED, THE BUILDING SHOULD BE PROPERLY WINTERIZED, AND THE WATER SOURCE CLOSED. IN THE EVENT THAT THE BUILDING MAY BE EXPOSED TO FREEZING TEMPERATURES AND WILL BE VACANT, ANY HYDRONIC COIL UNITS SHOULD BE DRAINED AS WELL AND, IN SUCH CASE, ALTERNATIVE HEAT SOURCES SHOULD BE UTILIZED.

B14933-206

Troubleshooting / Before You Request a Service Call

If your unit is not operating or is performing improperly, take time to perform the following checks before requesting service. A couple of simple checks may allow you to avoid a service call. If the following steps do not resolve the problem, contact a qualified servicer for further troubleshooting and/or repairs. Do not attempt troubleshooting beyond that which is outlined below. Do not attempt repairs yourself.

- Check thermostat for proper operation. Verify that it is set on HEAT and that temperature (above room temperature) setting is appropriate.
- Check to see that the manual gas shut-off valve external to the unit is in the ON position. If the valve is in the OFF position, turn the gas ON following the start up procedures outlined in the "Unit Start-up" section.
- Check for dirty filter(s). This in the most common cause of improper unit operation. Replace or clean filters as necessary.
- Check intake and vent terminations for obstructions. Check for blocked return air or supply air grilles throughout the building.
- Check the disconnect switch to confirm that the unit has power.

Most questions can be answered by your local dealer. For additional information, please call:

CONSUMER INFORMATION LINE
TOLL FREE
1-877-254-4729 (U.S. only)
email us at: customerservice@goodmanmfg.com or www.amana-hac-com
fax us at: (731) 856-1821
(Not a technical assistance line for dealers.)

Outside the U.S., call 1-713-861-2500.
(Not a technical assistance line for dealers.)
Your telephone company will bill you for the call.

To obtain the proper labels, the Model Number and Serial Number of the unit must be supplied. These numbers are recorded on the nameplate of the furnace.

For convenience, record this information here:

MODEL NUMBER: _____

SERIAL NUMBER: _____