CPG GAS-FIRED PACKAGED UNIT
USER'S INFORMATION MANUAL

WARNING

IF THE INFORMATION IN THESE INSTRUCTIONS IS NOT FOLLOWED EXACTLY, A FIRE OR EXPLOSION MAY RESULT CAUSING PROPERTY DAMAGE, PERSONAL INJURY OR LOSS OF LIFE.

– TO PREVENT THE RISK OF PROPERTY DAMAGE, PERSONAL INJURY, OR DEATH, DO NOT STORE COMBUSTIBLE MATERIALS OR USE GASOLINE OR OTHER FLAMMABLE LIQUIDS OR VAPORS IN THE VICINITY OF THIS APPLIANCE.

– **WHAT TO DO IF YOU SMELL GAS**:

- DO NOT TRY TO LIGHT ANY APPLIANCE.
- DO NOT TOUCH ANY ELECTRICAL SWITCH; DO NOT USE ANY PHONE IN YOUR BUILDING.
- IMMEDIATELY CALL YOUR GAS SUPPLIER FROM A NEIGHBOR'S PHONE. FOLLOW THE GAS SUPPLIER'S INSTRUCTIONS.
- IF YOU CANNOT REACH YOUR GAS SUPPLIER, CALL THE FIRE DEPARTMENT.

– INSTALLATION AND SERVICE MUST BE PERFORMED BY A QUALIFIED INSTALLER, SERVICE AGENCY OR THE GAS SUPPLIER. ONLY INDIVIDUALS MEETING THE REQUIREMENTS OF AN "ENTRY LEVEL TECHNICIAN" AS SPECIFIED BY THE AIR CONDITIONING AND REFRIGERATION INSTITUTE (ARI) MAY USE THIS INFORMATION. ATTEMPTING TO INSTALL OR REPAIR THIS UNIT WITHOUT SUCH BACKGROUND MAY RESULT IN PRODUCT DAMAGE, PERSONAL INJURY, OR DEATH.

Installer *- Affix this manual, Installation Guide, and Warranty adjacent to the appliance.*

Owner *- Read and keep all product literature in a safe place for future reference.*

WARNING

SHOULD OVERHEATING OCCUR, OR THE GAS SUPPLY FAIL TO SHUT OFF, SHUT OFF THE MANUAL GAS VALVE TO THE FURNACE BEFORE SHUTTING OFF THE ELECTRICAL SUPPLY.

WARNING

TO AVOID PROPERTY DAMAGE, PERSONAL INJURY OR DEATH, DO NOT USE THIS FURNACE IF ANY PART OF THE FURNACE HAS BEEN UNDER WATER. IMMEDIATELY CALL A QUALIFIED SERVICE TECHNICIAN TO INSPECT THE FURNACE AND TO REPLACE ANY PART OF THE CONTROL SYSTEM AND ANY GAS CONTROL HAVING BEEN UNDER WATER.

WARNING

PRODUCT CONTAINS FIBERGLASS WOOL. DISTURBING THE INSULATION IN THIS PRODUCT DURING INSTALLATION, MAINTENANCE, OR REPAIR WILL EXPOSE YOU TO FIBERGLASS WOOL. BREATHING THIS MAY CAUSE LUNG CANCER. (FIBERGLASS WOOL IS KNOWN TO THE STATE OF CALIFORNIA TO CAUSE CANCER.) FIBERGLASS WOOL MAY ALSO CAUSE RESPIRATORY, SKIN, AND EYE IRRITATION. TO REDUCE EXPOSURE OR FOR FURTHER INFORMATION, CONSULT MATERIAL SAFETY DATA SHEETS AVAILABLE FROM ADDRESS SHOWN BELOW.

RECOGNIZE THIS SYMBOL AS A SAFETY PRECAUTION.

Due to policy of continual product improvement, the right is reserved to change specifications and design without notice.

Part No. HI-122A
Printed in USA

©2009 Goodman Manufacturing Company, L.P.
Effective: January 2009

Introduction

The intent of this bulletin is to acquaint the user with some of the mechanical features and adjustments of the rooftop gas fired air conditioning units. In addition, the information contained in this manual is designed to identify any hazards and to serve as a guide to the user in the event of any malfunctions.

DO'S AND DO NOT'S

DO read the User's Manual and Installation Instructions before operating the unit.

DO have your heating and cooling unit serviced at least once a year. It is strongly recommended that the unit be inspected and serviced by a qualified service agency at the beginning of each heating and cooling season.

NOTE: *Additional periodic maintenance is recommended. Refer to "Maintenance" section.*

DO NOT attempt to alter the unit.

DO NOT block or obstruct the unit air inlets or outlets.

DO NOT tamper with the internal fan and limit control mechanisms.

DO NOT use any type of fuel other than indicated on the unit's nameplate.

Safety

Dear Owner, please recognize the following safety information. This information will alert you to the potential for personal injury.

WARNING

THIS PRODUCT CONTAINS OR PRODUCES A CHEMICAL OR CHEMICALS WHICH MAY CAUSE SERIOUS ILLNESS OR DEATH AND WHICH ARE KNOWN TO THE STATE OF CALIFORNIA TO CAUSE CANCER, BIRTH DEFECTS OR OTHER REPRODUCTIVE HARM.

WARNING

TO AVOID POSSIBLE EQUIPMENT DAMAGE, PERSONAL INJURY, FIRE OR DEATH, THE FOLLOWING INSTRUCTIONS MUST BE OBSERVED REGARDING UNIT LOCATION, AIR REQUIREMENTS AND OPERATING PROCEDURES.

WARNING

HEATING UNIT SHOULD NOT BE UTILIZED WITHOUT REASONABLE, ROUTINE, INSPECTION, MAINTENANCE AND SUPERVISION. IF THE BUILIDNG IN WHICH ANY SUCH DEVICE IS LOCATED WILL BE VACANT, CARE SHOULD BE TAKEN THAT SUCH DEVICE IS ROUTINELY INSPECTED, MAINTAINED AND MONITORED. IN THE EVENT THAT THE BUILDING MAYBE EXPOSED TO FREEZING TEMPERATURES AND WILL BE VACANT, ALL WATER-BEARING PIPES SHOULD BE DRAINED, THE BUILDING SHOULD BE PROPERLY WINTERIZED, AND THE WATER SOURCE CLOSED. IN THE EVENT THAT THE BUILDING MAY BE EXPOSED TO FREEZING TEMPERATURES AND WILL BE VACANT, ANY HYDRONIC COIL UNITS SHOULD BE DRAINED AS WELL AND, IN SUCH CASE, ALTERNATIVE HEAT SOURCES SHOULD BE UTILIZED.

Important Note To The Owner

Your warranty certificate is supplied with the unit. Read the warranty carefully and note what is covered. Keep the warranty certificate in a safe place, so you can find it, if necessary.

Before using this manual, check the serial plate for proper model identification.

The installation and servicing of this equipment must be performed by qualified, experienced technicians only.

Safety Instructions

WARNING

THIS FURNACE IS EQUIPPED WITH AN ELECTRIC IGNITION. **DO NOT** ATTEMPT TO LIGHT THE FURNACE MANUALLY WITH A MATCH OR OTHER LIGHTING MEANS.

Unit Location

These units are designed for outdoor installation only, either on a slab just above ground level or on a rooftop. The unit should be protected from access by unauthorized persons or children.

At no time should an enclosure be constructed around the unit that will prevent free air circulation or interfere with venting the flue discharge. An enclosure, overhang or obstruction shall not be placed above the unit. Units installed next to a wall are likely to experience backdrafts from adjacent walls.

Air Requirements

The unit requires air for combustion of the gas. Therefore, DO NOT block or obstruct the air or vent openings to the furnace. Keep the area surrounding the unit free from debris and snow. A vent stack is not required, and must never be used.

Unit Operation

WARNING

HIGH VOLTAGE!

DISCONNECT **ALL** POWER BEFORE INSTALLING OR SERVICING. MULTIPLE POWER SOURCES MAY BE PRESENT. FAILURE TO DO SO MAY CAUSE PROPERTY DAMAGE, PERSONAL INJURY, OR DEATH.

WARNING

EXCEPT DURING BRIEF PERIODS WHEN GAS PERSSURES ARE BEING MEASURED BY QUALIFIED SERVICE PERSONNEL, THE BURNER ACCESS PANEL MUST BE IN PLACE AT ALL TIMES WHEN THE UNIT IS OPERATING.

Unit Start-Up

1. **STOP!** Read all safety information.
2. Close the external manual gas shut-off valve.
3. Turn off all electric power to the disconnect switch.
4. Set thermostat or heat control to lowest setting.
5. Remove the burner door.

6. This appliance is equipped with an ignition device which automatically lights the burners. DO NOT try to light the burner by hand.
7. Turn gas control switch “OFF”. *Do not force.*
8. Wait five (5) minutes to clear out any gas. Then smell for gas.If you then smell gas, STOP! Follow the instructions on the cover of this manual. If you do not smell gas after five minutes, move the unit gas valve ON/OFF switch to the ON position.
9. Replace burner door. **DO NOT** omit any screws when replacing panel.
10. Open the external manual gas shut-off valve.
11. Turn on all electric power to the unit.
12. Set thermostat or controller to desired setting.
13. If the appliance will not operate, follow the instructions “Unit Shut Down” and call your service technician or gas supplier.

Unit Shut Down

WARNING

HIGH VOLTAGE!
Disconnect ALL power before installing or servicing. Multiple power sources may be present. Failure to do so may cause property damage, personal injury, or death.

1. Set the thermostat or controller to lowest setting or tun off power at switch.
2. Turn off all electrical power to the appliance if service is to be performed.
3. Remove burner door.
4. Turn gas control switch to “OFF”.
5. Replace burner door.

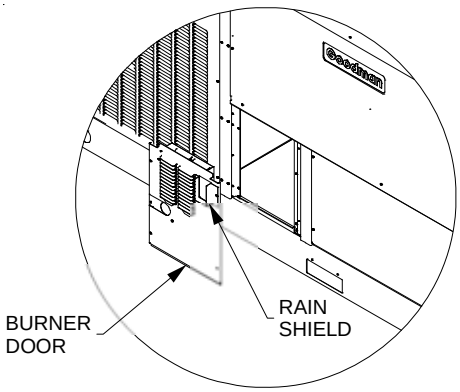

BURNER DOOR PANEL

Lockout Reset

A unit lockout is characterized by a non-functioning unit (circulator blower may be running continuously) providing a one flash diagnostic LED code. Lockout results when a unit control detects abnormal conditions. If the unit is in “lockout”, it may be reset by any of the following methods:

1. One hour automatic reset. Control will automatically reset itself and attempt to resume normal operations following a one hour lockout period.
2. Power interruption. Interrupt line voltage power to the unit for between 0 and 20 seconds.
3. Thermostat cycle. Interrupt thermostat signal to the unit for between 0 and 20 seconds.

If the condition which originally caused the lockout still exists, the control will return to lockout. If your unit frequently locks out, a problem exists which must be corrected. Contact a qualified servicer.

Routine Maintenance

Maintenance is to be performed by a qualified service technician only. User maintenance is to be restricted to frequent air filter changes and to ensure the warnings and notices found elsewhere in this manual be followed. We recommend that at a minimum system maintenance be performed by a qualified service technician prior to the beginning of each heating season, and if equipped with air conditioning prior to that season.

WARNING

Personal injury or death may result from improper maintenance performed by untrained personnel. Call your installing dealer or other qualified service companies to perform the maintenance inspection.

WARNING

To avoid personal injury or death due to electrical shock, disconnect the electrical power before performing any maintenance.

Annual Inspection

The unit should be inspected by a qualified installer, or service agency at least once per year. This check should be performed at the beginning of the heating season. This will insure that all unit components are in proper working order and that the heating system functions appropriately. Particular attention should be paid to the following items. Repair as necessary.

- The physical suport of the unit should be sound without sagging, cracks, etc., around the base to provide a seal between the support and the base.
- Flue pipe system. Check for blockage and/or leakage. Check the outside termination and the connections at and internal to the furnace.
- Combustion air intake pipe system (where applicable). Check for blockage and/or leakage. Check the outside termination and the connection at the furnace.
- Heat exchanger. Check for corrosion and/or buildup within the heat exchanger passageways.
- Burners. Check for proper ignition, burner flame, and flame sense. Flames should extend directly outward from burners without curling, floating or lifting off.
- Wiring. Check electrical connections for tightness and/or corrosion. Check wires for damage.
- Filters. Check that filters are clean and in the proper placement in the unit or duct system.

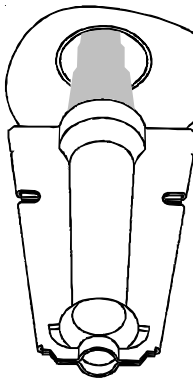

Check the burner flames for:
1. Good adjustment
2. Stable, soft and blue
3. Not curling, floating, or lifting off.

BURNER FLAME

FILTERS

WARNING

TO AVOID PROPERTY DAMAGE, PERSONAL INJURY OR DEATH, DISCONNECT ELECTRICAL POWER BEFORE REMOVING FILTERS. NEVER OPERATE FURNACE WITHOUT A FILTER INSTALLED BECAUSE DUST AND LINT WILL BUILD UP ON INTERNAL PARTS RESULTING IN LOSS OF EFFICIENCY, EQUIPMENT DAMAGE AND POSSIBLE FIRE.

Every application may require a different frequency of replacement of dirty filters. Filters must be inspected, cleaned or changed every three months or as required. As a owner, it is your personal responsibility to keep air filters clean. Remember that dirty filters are the most common cause of inadequate heating or cooling performance.

If you need assistance, contact the installer of your unit or another qualified servicer.

Become familiar with filter location and procedures for removing, cleaning and replacing them.

FILTERS REMOVAL

Remove the filter access panel on return air side of the unit.

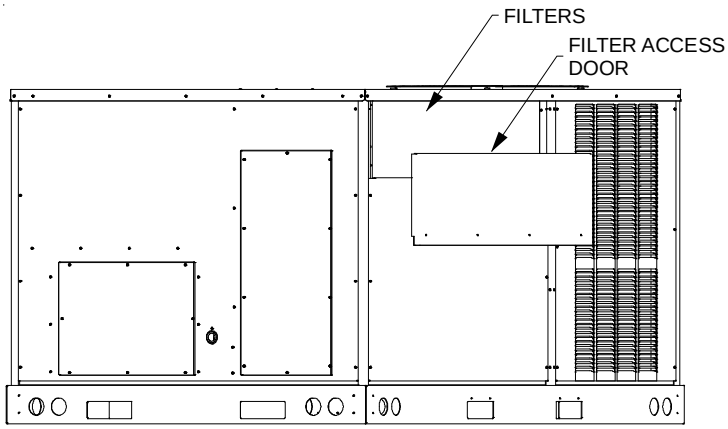

FILTER REMOVAL

FILTER CLEANING AND/OR REPLACEMENT

Remember to **always** replace the panels and screws before operating the unit.

Filters supplied with the units are the disposable type and must be replaced with the same size and same type of filters. Refer to your unit Installation Instructions for filter sizes.

When reinstalling filters, be careful to maintain correct airflow direction.

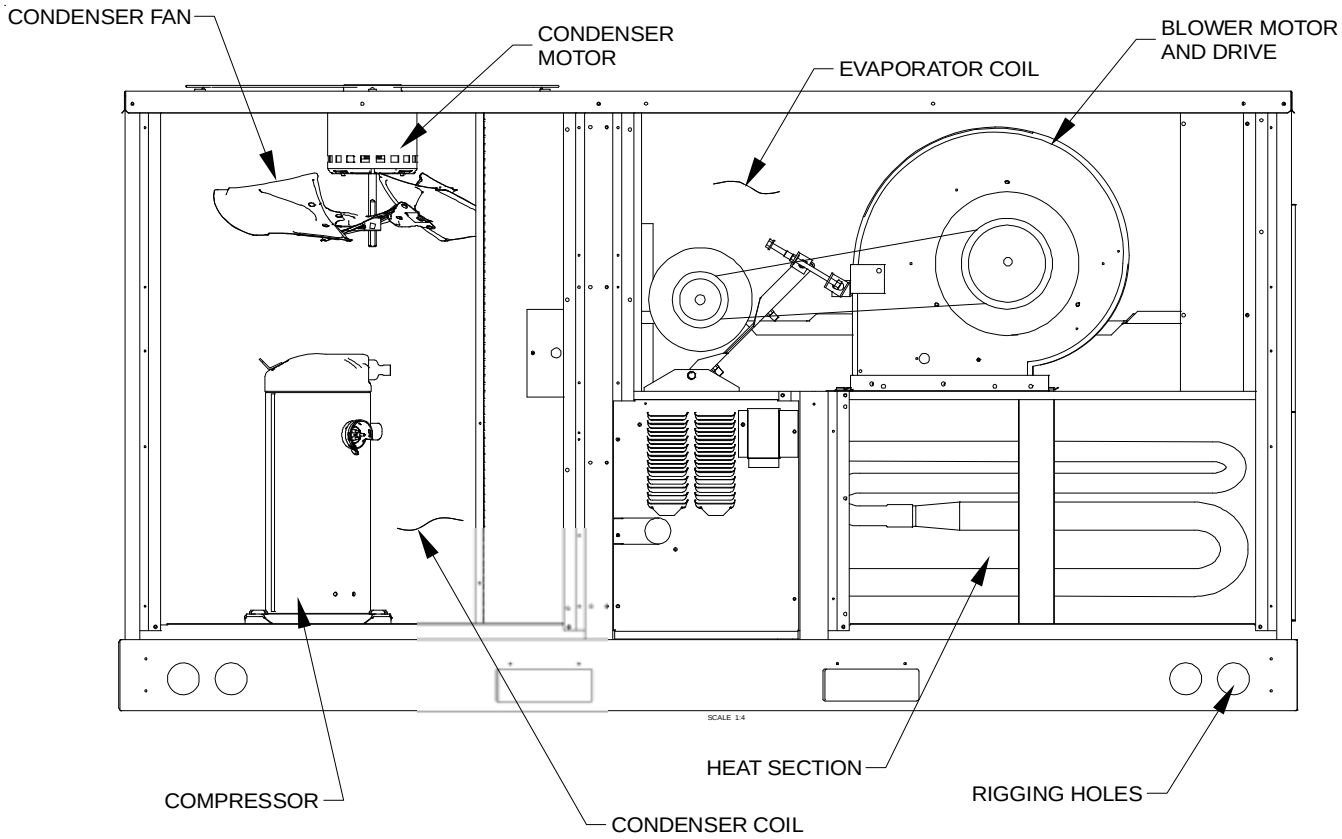
CONDENSER FAN
CONDENSER MOTOR
EVAPORATOR COIL
BLOWER MOTOR AND DRIVE
SCALE 1:4
HEAT SECTION
RIGGING HOLES
COMPRESSOR
CONDENSER COIL

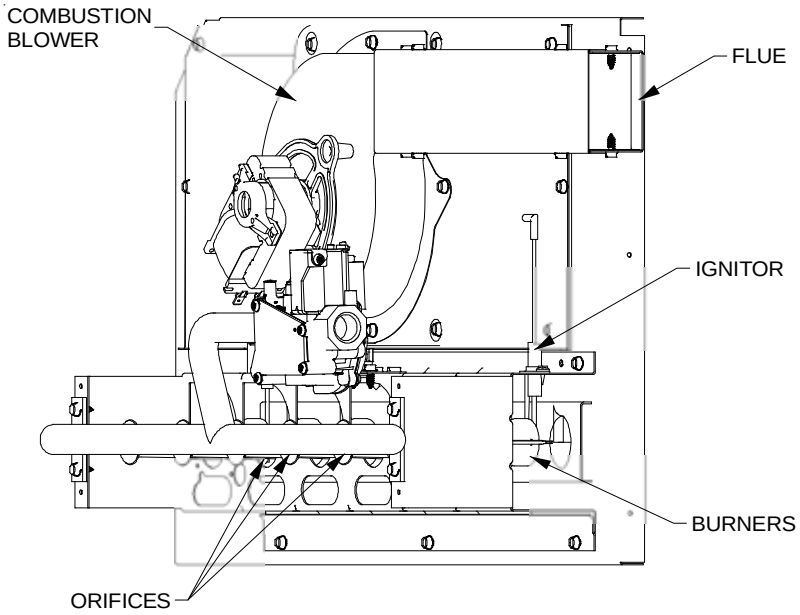
COMBUSTION BLOWER
FLUE
IGNITOR
BURNERS
ORIFICES

SAFETY LABELS

NOTE: If safety labels are missing or illegible, contact the installing dealer or our Customer Service Department for ordering information.

FOR YOUR SAFETY READ BEFORE OPERATING

WARNING If you do not follow these instructions exactly, a fire or explosion may result causing property damage, personal injury or loss of life.

A. This appliance does not have a pilot. It is equipped with an ignition device which automatically lights the burners. Do not try to light the burners by hand.

B. BEFORE OPERATING smell around the appliance area for gas. Be sure to smell next to the floor because some gas is heavier than air and will settle on the floor.

WHAT TO DO IF YOU SMELL GAS

- Do not try to light any appliance.
- Do not touch any electric switch; do not use any telephone in your building.
- Immediately call your supplier from a neighbor's phone. Follow the gas suppliers instructions.
- If you cannot reach your gas supplier, call the fire department.

C. Use only your hand to move the gas control switch or knob. Never use tools. If the gas control switch or knob will not operate, don't try to repair it, call a qualified service technician. Force or attempted repair may result in a fire or explosion.

D. Do not use this appliance if any part has been under water. Immediately call a qualified service technician to inspect the appliance and to replace any part of the control system and any gas control which has been under water.

WARNING: Improper installation, adjustment, alteration, service or maintenance can cause injury or property damage. Refer to the user's information manual provided with this furnace. For assistance or additional information consult a qualified installer, service agency or the gas supplier.

This furnace must be installed in accordance with the manufacturers instructions and local codes. In the absence of local codes, follow the National Fuel Gas Code, ANSI Z223.1.

OPERATING INSTRUCTIONS

1. STOP! Read the safety information above on this label.
2. Set the thermostat to lowest setting.
3. Turn off all electric power to the appliance.
4. This appliance is equipped with an automatic ignition system which automatically lights the burners. Do not try to light the burners by hand.
5. Remove control access panel.
6. Move the gas control switch or knob to "OFF".

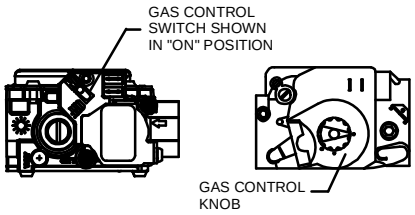

7. Wait five (5) minutes to clear out any gas. If you then smell gas, STOP! Follow "B" in the safety information above on this label. If you don't smell gas, go to the next step.
8. Move the gas control switch or knob to "ON".
9. Replace control access panel.
10. Turn on all electric power to the appliance.
11. Set the thermostat to the desired setting.
12. If the appliance will not operate, follow the instructions "To Turn Off Gas To Appliance" and call your service technician or gas supplier.

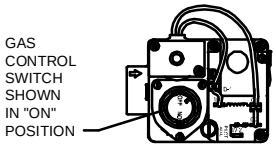

For outdoor installation only.

WARNING: If not installed, operated and maintained in accordance with the manufacturer's instructions, this product could expose you to substances in fuel combustion which can cause death or serious illness and which are known to the State of California to cause cancer, birth defects or other reproductive harm. This product contains fiberglass insulation. Fiberglass insulation contains a chemical known by the State of California to cause cancer.

TO TURN OFF GAS TO APPLIANCE

1. Set the thermostat to its lowest setting.
2. Turn off all electric power to the appliance if service is to be performed.
3. Remove control access panel.
4. Move the gas control switch or knob to "OFF". Do not force.
5. Replace control access panel.

FOR YOUR SAFETY Do not store or use gasoline or other flammable vapors and liquids in the vicinity of this or any other appliance.

B14933-239

SAFETY LABELS

WARNING

CARBON MONOXIDE POISONING HAZARD

FAILURE TO KEEP THIS COMPARTMENT CLOSED EXCEPT WHEN SERVICING COULD RESULT IN CARBON MONOXIDE POISONING OR DEATH.

THIS COMPARMENT MUST BE CLOSED EXCEPT WHEN SERVICING

AVERTISSEMENT

RISQUE D'EMPOISONNEMENT AU MONOXYDE DE CARBONE

SI CE COMPARTMENT N'EST PAS FERME EN TOUT TEMPS, SAUF EN CAS DE REPARATION, IL Y A RISQUE D'EMPOISONNEMENT OU MONOXYDE DE CARBONE OU DE MORT.

CE COMPARTIMENT DOIT ETRE FERME SAUF AU MOMENT DE L'ENTRETIEN.

ADVERTENCIA

PELIGRO MONÓXIDO DE CARBONO TOXICO

EL FRACASO DE NO MANTENER COMPARTIMIENTO CERRADO MENOS DURANTE, ATENDER, PODRIA TENER COMO RESULTADO ENVENENAR DE MONÓXIDO DE CARBONO O MUERTE.
ESTE COMPARTIMIENTO DEBE CERRADO MENOS AL ATENDER

0140L00106

WARNING: FIRE, EXPLOSION AND ASPHYXIATION HAZARD	WARNING: FIRE AND EXPLOSION HAZARD
IMPROPER INSTALLATION, ADJUSTMENT, ALTERATION SERVICE OR MAINTENANCE CAN CAUSE PROPERTY DAMAGE, PERSONAL INJURY OR DEATH, OR EXPOSURE TO SUBSTANCES IN FUEL OR FROM FUEL COMBUSTION WHICH CAN CAUSE DEATH OR SERIOUS ILLNESS, AND WHICH ARE KNOWN TO THE STATE OF CALIFORNIA TO CAUSE CANCER, BIRTH DEFECTS, OR OTHER REPRODUCTIVE HARM. READ AND FOLLOW INSTRUCTIONS AND PRECAUTIONS IN USER'S INFORMATION MANUAL PROVIDED WITH THIS FURNACE. INSTALLATION AND SERVICE MUST BE PERFORMED BY A QUALIFIED INSTALLER, SERVICE AGENCY OR GAS SUPPLIER.	CAN RESULT IN SERIOUS INJURY OR DEATH. DO NOT STORE OR USE GASOLINE OR OTHER FLAMMABLE VAPORS AND LIQUIDS IN THE VICINITY OF THIS OR ANY OTHER APPLIANCE. STORAGE OF OR USE OF GASOLINE OR OTHER FLAMMABLE VAPORS OR LIQUIDS IN THE VICINITY OF THIS OR ANY APPLIANCE CAN RESULT IN SERIOUS INJURY OR DEATH.
AVERTISSEMENT: RISQUE D'INCENDIE, D'EXPLOSION ET ASPHYXIE	AVERTISSEMENT:RISQUE D'INCENDIE ET D'EXPLOSION
UN REGLAGE, UNE MODIFICATION, UN RÉPARATION, UN ENRETIEN OU UNE INSTALLATION INCORRECT PUET ENTRAÎNER DES BLESSURES GRAVES OU LA MORT. SUIVRE LES INSTRUCTION ET LES CONSIGNES QUI FIGURENT DANS LA NOTICE D'UTILISATION QUI ACCOMPAGNE CE GÉNÉRATEUR D'AIR CHAUD. L'INSTALLATION ET L'ENTRETIEN DOIVENT ÊTRE EFFECTURÉS PAR UN RÉPARATEUR QUALIFIÉ OU PAR LE FOURNISSEUR DE GAZ.	RISQUE DE BLESSURES GRAVES OU DE MORT. NE PAS ENTREPOSER NI UTILISER DE L'ESSENCE NI D'AUTRES VAPEURS OU LIQUIDES INFLAMMABLES DANS LE VOISINAGE DE CET APPAREIL, NI DE TOUT AUTRE APPAREIL. LE FAIT D'ENTREPOSER OU D'UTILISER DE L'ESSENCE OU D'AUTRES LIQUIDES OU VAPEURS INFLAMMABLES À PROXIMITÉ DE CET APPAREIL OU DE TOUT AUTRE APPAREIL PEUT CAUSER DES BLESSURES GRAVES OU LA MORT.
SEE INSIDE SURFACE OF BURNER COMPARTMENT DOOR FOR LIGHTING/OPERATING INSTRUCTIONS.	FILTER(S) SHOULD BE INSPECTED FREQUENTLY AND CLEANED WHEN NECESSARY. WHEN REPLACEMENT IS REQUIRED BE SURE TO USE THE SAME TYPE (CLASS 1 OR 2) AND SIZE ORIGINALLY INSTALLED AND THAT IT IS U.L.C.* CERTIFIED. *CANADIAN REQUIREMENT
LES INDICATIONS POUR L 'ECLAIRAGE ET LE SERVICE SE TROUVENT A LA SURFACE INTERIEURE LA PORTE DU COMPARTIMENT DU BRULEUR.	LES FILTRES DOIVENT ETRE FREQUEMMENT INSPECTES ET NETTOYES SI NECESSAIRE. REMPLACES-LES DE FILTRES DU MEME TYPE (CLASSE 1 OU 2) ET FORMAT QUE DANS L'EQUIPEMENT ORIGINAL. CERTIFIES PAR LE U.L.C. 22317001

WARNING

Risk of electric shock or death.

Disconnect remote electric power supply or supplies before servicing.

This compartment must be closed except when servicing.

AVERTISSEMENT

Danger de choc électrique ou de mort.
Débrancher toute boite á fusibles avant l'entretien.
Ce compartment doit rester ferme, sauf pour l'entretien.

WARNING

HEATING UNITS SHOULD NOT BE UTILIZED WITHOUT REASONABLE, ROUTINE, INSPECTION, MAINTENANCE AND SUPERVISION. IF THE BUILDING IN WHICH ANY SUCH DEVICE IS LOCATED WILL BE VACANT, CARE SHOULD BE TAKEN THAT SUCH DEVICE IS ROUTINELY INSPECTED, MAINTAINED AND MONITORED. IN THE EVENT THAT THE BUILDING MAY BE EXPOSED TO FREEZING TEMPERATURES AND WILL BE VACANT, ALL WATER-BEARING PIPES SHOULD BE DRAINED, THE BUILDING SHOULD BE PROPERLY WINTERIZED, AND THE WATER SOURCE CLOSED. IN THE EVENT THAT THE BUILDING MAY BE EXPOSED TO FREEZING TEMPERATURES AND WILL BE VACANT, ANY HYDRONIC COIL UNITS SHOULD BE DRAINED AS WELL AND, IN SUCH CASE, ALTERNATIVE HEAT SOURCES SHOULD BE UTILIZED.

B14933-206

Troubleshooting / Before You Request a Service Call

If your unit is not operating or is performing improperly, take time to perform the following checks before requesting service. A couple of simple checks may allow you to avoid a service call. If the following steps do not resolve the problem, contact a qualified servicer for further troubleshooting and/or repairs. Do not attempt troubleshooting beyond that which is outlined below. Do not attempt repairs yourself.

- Check thermostat for proper operation. Verify that it is set on HEAT and that temperature (above room temperature) setting is appropriate.
- Check to see that the manual gas shut-off valve external to the unit is in the ON position. If the valve is in the OFF position, turn the gas ON following the start up procedures outlined in the "Unit Start-up" section.
- Check for dirty filter(s). This in the most common cause of improper unit operation. Replace or clean filters as necessary.
- Check for blocked return air or supply air grilles throughout you home. Grilles may be blocked by furniture, drapery, clothes, carpeting, etc. Clear any blockage.

Most questions can be answered by your local dealer. For additional information, please call:

CONSUMER INFORMATION LINE
TOLL FREE
1-877-254-4729 (U.S. only)
email us at: customerservice@goodmanmfg.com
fax us at: (731) 856-1821
(Not a technical assistance line for dealers.)

Outside the U.S., call 1-713-861-2500.
(Not a technical assistance line for dealers.)
Your telephone company will bill you for the call.

To obtain the proper labels, the Model Number and Serial Number of the unit must be supplied. These numbers are recorded on the nameplate of the furnace. For convenience, record this information here:

MODEL NUMBER: _ _ _ _ _ _ _ _ _ _ _ _ _

©2009 Goodman Manufacturing Company, L.P.
Effective: January 2009