GOODMAN
TECHNICAL
SERVICES

# GoodNews Tech Tips

VOLUME 2, ISSUE 1 JANUARY 2011

INSIDE THIS ISSUE:

| | |
|---|---|
| PCBDM133 Defrost Board | 1 |
| PCBDM133 Defrost Board Continued | 2 |
| Sequence of CP series roof top Installation | 3 |
| ESP Requirements | 4 |
| ESP Requirements Continued | 5 |
| Third-Party Electric Heater Kits | 5 |
| Technical Training Programs | 6 |

**NATE Certification**

**Goodman encourages and supports HVAC contractors who earn NATE Certification. The NATE badge is a symbol recognized by an ever-increasing number of homeowners as the official mark of technician excellence.**

# PCBDM133 Defrost Board

Goodman's enhanced heat pump designed to make the Goodman / Amana heat pumps "First in Class" was introduced in September with the release of the redesigned 14 SEER and higher heat pumps and was completed in November with the release of the redesigned GSZ / ASZ / VSZ13 heat pumps. The list of features below represents the improvements that have been incorporated into the heat pump line.

1. New Defrost Control PCBM133 with the optional 30 second compressor time delay built into the board. ( all units except communicating units)
2. Defrost sensor located on last flowrator leg for optimal defrost control. (5mm units)
3. Crankcase heaters with thermostat factory installed.
4. Accumulators on all units.
5. Discharge line thermostat.
6. Ranco reversing valves replacing Dunan on the 14 SEER and higher units.
7. Low pressure switches relocated to the suction line.
8. Access tube location changed from at compressor suction to suction tube between RV and Accumulator.
   - Helps prevent charge being dumped to compressor sump during charging.
   - Reduces slugged start after charging.
9. Detailed charging instructions for the heat cycle will be added as they are developed.

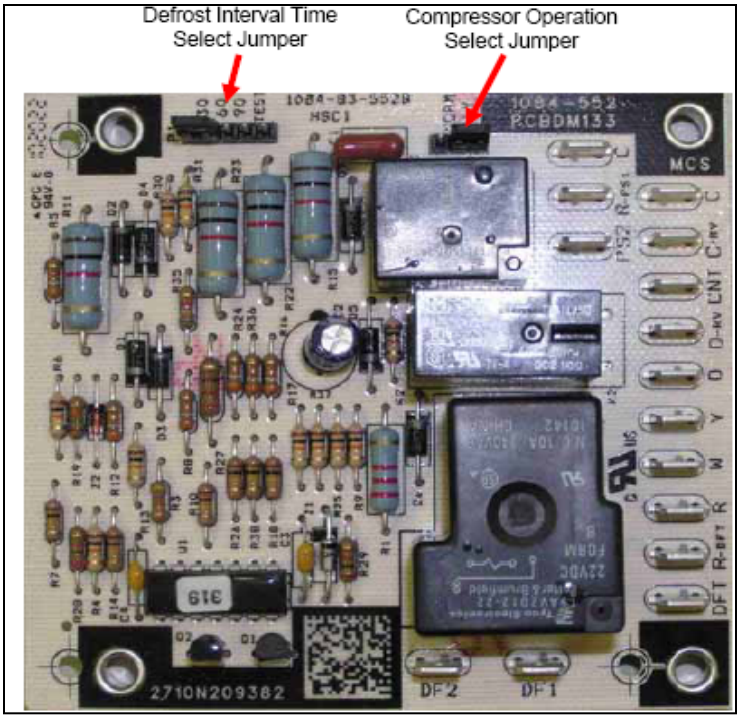


**JANUARY 2011**

Goodman
Air Conditioning & Heating

# PCBDM133 Defrost Board Continued

The new PCBDM133 defrost board introduced on the *SZ13,*SZ14 and SSZ16 units have an optional 30 second compressor time delay built on the board to provide a quiet shift feature during defrost. The board is designed to bypass the low pressure switch during initiation and termination of the defrost cycle to eliminate nuisance low pressure tripping. Maximum defrost cycle time has been extended to 12 minutes. Test procedure is the same as the earlier board.

The new PCBDM133 board will operate in the following manner when stat satisfies during defrost. If the indoor thermostat is satisfied (Y de-energizes) the unit will shut down suspending the defrost cycle until the compressor is re-energized. When this happens the defrost cycle is resumed at the same point unless defrost stat has opened.

The *SZC16 and *SZC18 communicating heat pump UC board has a built-in compressor time delay on the board. If the unit is wired legacy the board has fixed 5 second compressor time delay. When the unit is installed in fully communicating mode the compressor time delay is adjustable from 0,5,15 or 30 seconds. This feature is accessed from the advanced user menu on the communicating thermostat.

When wired in legacy the defrost timer on the UC board can be field set to 30, 60, 90 or 120 minutes by setting the dipswitches in the appropriate positions. . The top switch can be set to 30 or 60 minutes and the bottom switch is set to either zero or 60 minutes depending on the amount time required. For example: If a 120 minute cycle is desired the top switch should be set to 60 and bottom switch set to 60 minutes. When wired communicating defrost timer can be adjusted in the advanced user menu on the communicating thermostat. The defrost timer on the UC board accumulates actual compressor time instead of run time of the unit with a “Y” signal. Outdoor coil sensor used on this unit closes at 31°F

From the customer wanting an entry level 13 SEER heat pump to the most discriminating customer wanting a state of the art communicating 16 and 18 SEER heat pump systems. With the introduction of these redesigned heat pumps Goodman has position our dealers to offer the most complete line of high efficiency and dependable heat pumps on the market today.

# Sequence of CP Series roof top

When installing a CP series roof top unit there is a sequence to follow to assure a proper and trouble free installation. Below is an example for a sequence of installation of a Goodman CP series commercial unit. These steps are simple but some may be overlooked and as a result operational issues could arise.

**Sequence of Unit Installation**

The support method used for this unit will dictate different sequences for the steps of unit installation. For example, on curb-mounted units, some accessories must be installed on the unit before the unit is placed on the curb.

**Curb-mounted installation**

Install curb so that it is level no more than 1/2 bubble corner to corner off.

Install the supplied gasket material to the curb rails to assure a tight seal to the unit bottom.

Install field-fabricated ductwork inside curb.

Prepare bottom condensate drain connection to suit planned condensate line routing if using the through the base drain.

Rig and place unit check the level of the unit.

Install outdoor air dampers or economizer if used.

Install flue rain shield on CPG units

Install gas piping as shown in the I&O

Install condensate line trap and piping per the I&O.

Make electrical connections

Install other accessories

**Inspect Unit**

Inspect unit for transportation damage. File any claim with transportation agency.

Confirm before installation of unit that. voltage, amperage and circuit protection requirements listed on unit data plate agree with power supply provided.

Confirm the unit rotation by checking the blower rotation on belt drive units or by the compressor on direct drive units listening for a loud sound and checking pressures.

If the blower runs backwards or the compressor is noisy turn off all power and reverse the out side legs of the three phase wiring on the **load** side of the disconnect switch.

Verify all operations of the machine per the I&O before leaving the job.



Goodman
Air Conditioning & Heating

# ESP Requirements

Total External Static Pressure (ESP) requirements are often overlooked when a furnace installation is planned. Today's high efficiency systems make proper system design more important than ever. When installing or diagnosing any ducted system you will want to know the system total ESP. Too many furnaces are installed with improperly sized new or existing duct work. This leads to unreliable operation and premature heat exchanger failure. Every furnace has a manufactures total allowable ESP listed on the rating plate; in most cases this is .5" W.C. This tells us that for the furnace to function properly; the duct system static pressure including the air conditioning coil, filter, registers and grilles must not exceed .5" W.C. total ESP. A furnace will deliver less CFM at any given speed in a high static system compared to a lower static system. Even ECM motors have limits when it comes to operating at high duct static pressure. In an attempt to deliver the requested CFM they can increase their RPM until their torque limit is reached but this also has some undesirable results. Efficiency will decrease and noise can increase to an undesirable level.

Total external static pressure can be measured with a magnahelic, slope gauge (inclined manometer), or electronic instrument. What ever instrument is used; it must be capable of accurately measuring fractions of an inch of water column pressure. The illustration below shows a slope gauge connected to the supply and return at the same time. In this scenario; the movement of the water column from its original position will give a reading of total ESP. Another option is to do each reading separately. If taking the readings separately; the difference between the two readings will be your total ESP.

Keep in mind that the reading from the return duct will be a negative number and the reading from the supply duct will be a positive number.

Example: Supply duct static reading = .3" W.C. (positive pressure)

Return duct static reading = -.1" W.C. (negative pressure)

In this example the total ESP = .4" W.C.

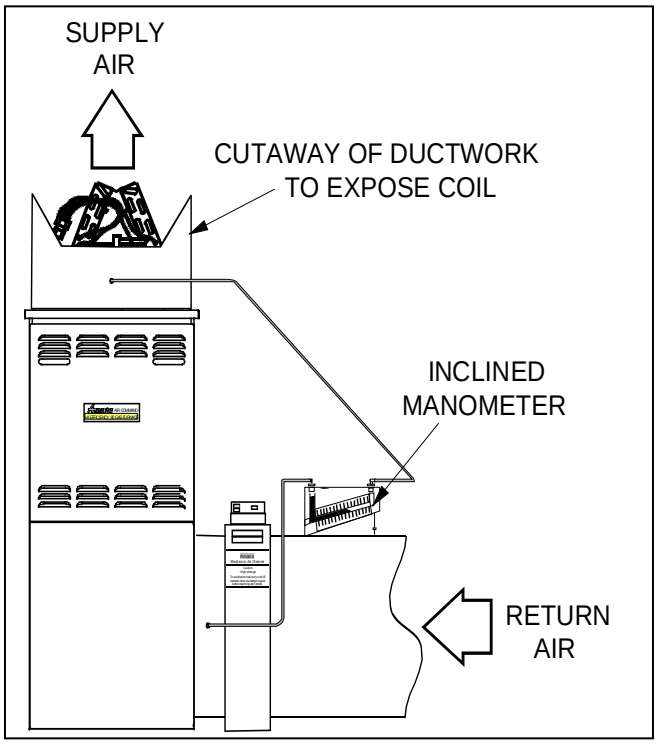




Goodman
Air Conditioning & Heating

# ESP Requirements Continued

When choosing the two points at which to take your readings; it is important to remember that the total ESP reading needs to include everything external to the furnace cabinet. If there is a coil attached to the furnace, then your supply side reading must be between the supply air opening of the furnace and the coil. If this is a cased coil sitting directly on the furnace; the most practical method of taking the reading would be to remove the door of the cased coil, remove the "A" shaped block-off plate, drill a hole to allow insertion of the test probe, install the block off plate, insert your test probe (preferably with a magnetic base to keep it in place), connect tubing between the test probe and instrument, install coil door, start the furnace and take a reading when the fan is up to speed. For the heating mode the fan speed should be in factory default fan speed. If the furnace has more than one stage of heat, the furnace must be operating in high fire and the proper fan speed for that mode.

Likewise the return duct static reading must include the entire resistance of the return duct, filters and grilles and thus must be taken between the furnace and return air filter as shown in the illustration.

A total ESP reading greater than the manufacturers rating plate allows indicates there is a design or installation issue that must be corrected. Many systems with high ESP have properly sized ducts but 100% of the return air is coming through inadequate 3.5" wall spaces or overly restrictive filters. A gas furnace is part of a system and can only function as well as the duct system will allow.

# Third-Party Electric Heater Kits

Just a reminder that using third-party electric heater kits in Goodman and Amana brand units is not approved by Goodman. We have no input into, or control over, the design and manufacture of third-party electric heater kits. As such, we make no claims for their fitness for use with our products. Because we cannot validate their fitness for use, we cannot and do not maintain the warranty on equipment that uses them.

As a reminder, our warranty documentation states the following:

"Goodman is not responsible for … parts not supplied or designated by Goodman."

These third-party electric heater kits are not supplied or designated by Goodman. In some cases, customers have attempted to file warranty claims on these third-party electric heaters with Goodman. We will not pay any such claim. Also, use of an unapproved electric heater kit will void the parts warranty, or any extended service contract, for the air handler, package unit or modular blower.

A list of approved electric heater kits may be found in the specification sheets for any given product.

Goodman
Air Conditioning & Heating

**Thank goodness for Goodman™.**

## Goodman Technical Services

1810 Wilson Parkway
Fayetteville, TN 37334
Tel: 1-888-593-9988
Fax: 1-713-316-5541
E-mail:
HACServicerSupport@goodmanmfg.com

Amana Heating & Air Conditioning

**Last and Last and Last™.**

**We've become one of the largest manufacturers of residential and light commercial air conditioning, heating, and indoor air quality products and systems by focusing on just one thing-building the most reliable and refreshingly affordable indoor comfort products in the market.**

**The complete line if Goodman brand products are built on the principle of founder Harold Goodman, a former air conditioning contractor.**

**Harold's goal was to manufacture air conditioning and heating equipment that:**

- **Provides industry leading product warranties**
- **Offers greater reliability and longer-lasting performance than competing products**
- **Is designed for quick., trouble-free installations**
- **Makes reliable cooling and heating as affordable as possible.**

**Building our products to Harold's standards, and protecting those products with some of the best limited warranties in the industry, has helped to make the Goodman brand widely recognized as a leading brand in the residential and light commercial heating, ventilation and air conditioning industry today.**

**We're on the web!**

**www.goodmanmfg.com**

# Technical Training Programs

Continuing education has proven to be instrumental in raising the level of competence, reliability and performance of HVAC service technicians. In this issue Goodman Technical Services would like to present some of the outside training possibilities that would primarily be targeting entry level technicians as well as the most advanced technicians.

Of course local colleges and tech schools offer almost everything a beginning level technician might need but some individuals as well as service companies are reluctant to make the kind of time commitment required to be successful at these programs. In order to expedite or fast track most of the educational requirements for these technicians, several organizations have developed training packages that can facilitate this need for quicker training. These organizations are also committed to raising the bar for much more experienced technicians as well by offering the more advanced and cutting edge training.

Three of the more notable organizations that offer this kind of training and certification process are NATE, NCI and ESCO.

NATE (North American Technician Excellence) has probably the most wide ranging training available and offers a certification policy that is one of the most recognized in the country today. Contact NATE at www.natex.org.

NCI (National Comfort Institute) offers training in Air Balancing, Air Diagnostics, Combustion Analysis, Carbon Monoxide and others. They also offer a certification policy. Contact NCI at www.nationalcomfortinstitute.com.

ESCO Institute offers training in EPA Sect 608, Carbon Monoxide, Green Awareness, Combustion Analysis, Heat Pump Systems and Refrigeration Charging. ESCO offers certification as well. Contact ESCO at www.escoinst.com.

The key to success in any of these programs is to find the time to participate and to utilize the new ideas that may be presented. The end result will be more satisfied customers, better bottom line profits and fewer call backs. The rewards for continuing education are documented and real.

See you in class!

Goodman
Air Conditioning & Heating