GOODMAN TECHNICAL SERVICES

# GoodNews Tech Tips

VOLUME 3, ISSUE 4 NOVEMBER 2012

INSIDE THIS ISSUE:

Smart Frame™ Air Handler Conversion 1

Smart Frame™ Air Handler Conversion Continued 2

It's Heating Season 3

Light Commercial Changes and New Features 4

For Those of You in the Field... 5

For Those of You in the Field… Continued 6

For Those of You in the Field… Continued 7

Please Welcome... 8

Service Bulletins 8

**NATE Certification**

**Goodman encourages and supports HVAC contractors who earn NATE Certification. The NATE badge is a symbol recognized by an ever-increasing number of homeowners as the official mark of technician excellence.**

## Smart Frame™ Air Handler Conversion

### by Steve Perry

With the successful launch of the ARUF/ARPT**14AA air handlers in the Smart Frame™ design, Goodman will introduce this technology in all single-piece air handler lines in the coming months.

**ASUF Air Handlers**

- The ASUF**14 Air Handlers will utilize EEM motors in the next generation air handler chassis.
- These air handlers will be equipped with a flowrator and will utilize the ARUF unit design.
- The ASUF product will enhance our capabilities in the mid-efficiency range.
- These units will be launched in phases, with the ASUF59D14AA releasing in October, 2012. Others models will follow as testing is completed.

| ASUF Air Handler Models | |
|---|---|
| ASUF29B14 (1.5-2.5 Ton) RVP 1/2013 | ASUF39C14 (1.5-3 Ton) RVP 1/2013 |
| ASUF49C14 (3.5-5 Ton) RVP 12/2012 | ASUF59D14 (3.5-5 Ton) RVP 10/2012 |

**ASPT Air Handlers**

- This project will use the newly developed air handler line to introduce the ASPT unit, which will replace the current ASPF air handlers.
- Six new SKUs will be introduced. **Note:** ASPT48D14 may be consolidated with the ASPT60D14AA units.
- Units will be equipped with non-adjustable TXVs, which will be similar to ARPT units or Danfoss adjustable valves. Note: No field adjustment will be recommended in the installation instructions.
- The ASPT24 & 36 units will use the new Broad Ocean motor, and the ASPT42,48 & 60 units will use the current Nidec motors.

- The units will have the following AHRI ratings.

  13 and 14 SEER HP and Condensers

  16 SEER Single-stage HP and Condensers

  16 SEER and 18 SEER Two-stage products, which will be submitted at a later date after all testing is completed and performance is verified.

| ASPT Air Handler Models | |
|---|---|
| ASPT24B14 (1.5-2 Ton) | ASPT25C14 (1.5-2 Ton) |
| ASPT36C14 (2.5-3 Ton) | ASPT42D14 (3-3.5 Ton) |
| ASPT48D14 (3.5-4 Ton) | ASPT60D14 (4-5 Ton) |

**AVPTC Air Handlers**

- New Smart Frame™ AVPTC air handlers will replace the current AVPTC air handlers.
- This product line will be introduced in five models and will be based on the ASPT line of air handlers.
- RVP on the new AVPTC is scheduled for March, 2013.
- Introduction of the AVPTC units will allow the dealer to offer a communicating system using the new Smart Frame™ air handler.

| AVPTC Air Handler Models | |
|---|---|
| AVPTC24B14 (1.5- 2 Ton) | AVPTC25C14 (1.5-2 Ton) |
| AVPTC36C14 (2.5-3 Ton) | AVPTC42D14 (3- 3.5 Ton) |
| AVPTC60D14 (4- 5 Ton) | |

**New Permanent Filters for New Smart Frame™ Air Handlers**

- Earlier this year, Goodman released its long anticipated ARUF and ARPT single-piece air handlers. The new models incorporated several standard features that often are only found in premium competitive offerings.
- All models were intended to accommodate internal 1” common size filters. The B-chassis models were designed to utilize a 16” x 20” filter, the C-chassis models were designed to utilize a 20” x 20” filter and the D-chassis models were designed to utilize a 24” x 20” filter. Variances compromised the size of the filter in the D-chassis units requiring a filter slightly smaller than the specified 24” size.
- Effective immediately, Goodman is proud to announce the release of a new line of washable filters specially designed to accommodate the B, C and D - chassis sizes. These new heavy duty 1” filters include an aluminum frame and a washable foam core sandwiched between two expanded aluminum guards.

| Chassis Width | Part Number | Filter Size |
|---|---|---|
| B | ALFH16201E | 16" x 20" |
| C | ALFH192201E | 19.5" x 20" |
| D | ALFH20231E | 23" x 20" |

# It's Heating Season

## by Al Lush

It is that time of year again. Here are some items you will want to take note of when doing furnace start ups or service calls.

### For High Efficiency Furnaces:

Clean / check and prime the drain trap. Most furnaces produced in the last two years will have a -.1" WC front cover pressure switch. This setting will usually allow the switch to close with a dry trap. The front cover pressure switch is wired in series with the gas valve and must be electrically "closed" before the gas valve will open. Also, an open front cover pressure switch will not display an "open pressure switch" fault code since it is not wired with the inducer pressure switch.

Check Venting

This would include ensuring that all joints are secure, terminations are clear and unobstructed, pipes have at least minimum slope toward the furnace (¼" per foot) and have no blockages from debris, nests etc. Also make sure that no section of the vent pipe can trap water.

Combustion

This would include flame appearance as well as CO checks in the supply air and vent pipe termination. Flames should be uniform in appearance and not impinging on the orifice plate between the burner rack and heat exchanger panel. Make sure gas manifold pressure 3.2 – 3.8" WC for natural gas and 9.7 – 10.3" WC for LP gas. Vent pipe CO should be checked after the furnace has had several minutes to heat up. Factors that can elevate CO include; flame impingement, furnace holding water from negative installation slope, furnace holding water from improper drain hose connections, excessive vent restriction, re-circulation of flue gas from vent pipe into combustion air inlet, lack of combustion air, improper gas pressure, improper mixing of gas / air (dirty burners)

***Important;*** Make sure all furnace doors are properly installed.

### For 80% Furnaces:

Check Venting

This would include ensuring that all joints are secure, terminations are clear and unobstructed. Horizontal sections of venting must have at least minimum slope toward the furnace (¼" per foot) and have no blockages from debris, nests etc. Make sure the size and installation of the venting meets local and National Codes. An 80% furnace is not designed to handle condensation. Causes of condensation include; oversized venting, venting running through unconditioned or un-heated spaces, short furnace cycles which do not allow the furnace and venting to reach normal operating temperatures.

Combustion

This would include flame appearance as well as CO checks in the supply air and vent pipe termination. Flames should be uniform in appearance and not impinging on the orifice plate between the burner rack and heat exchanger panel. Make sure gas manifold pressure 3.2 – 3.8" WC for natural gas and 9.7 – 10.3" WC for LP gas. Vent pipe CO should be checked after the furnace has had several minutes to heat up. Factors that can elevate CO include; flame impingement, lack of combustion air, improper gas pressure, improper mixing of gas / air (dirty burners)

***Important;*** Make sure all furnace doors are properly installed.



Goodman®
Air Conditioning & Heating

# Light Commercial Changes and New Features

## by Tom Hicks

We are pleased to introduce a few changes and new features to our light commercial package products. In regards to accessories, Goodman will now be offering, as a factory installed option only, smoke detectors and non-fused disconnects.

Smoke detectors for 3 – 20 ton systems can be ordered in 3 different configurations: supply only, return only or supply and return. System Sensor smoke detectors will be used, and they consist of a power board, one or two sensors (depending on the application) and all sample tubing. **Note:** On 3 -6 ton models, the return air sample tubing must be installed by the contractor. The smoke detectors will be pre-wired from the factory and smoke emitters will be supplied in the unit for field testing, if the contractor wishes to use them.

Non-fused disconnects can also be ordered on 3 – 20 ton commercial products as a factory - installed option only. All disconnects are mounted close to the electrical access panel and are operated with a handle that must be installed by the contractor in the field (see Figure A below). These handles can also be locked to prevent tampering. If the unit is equipped with a factory installed powered convenience outlet, no power will be supplied to the outlet with the handle in the off position.

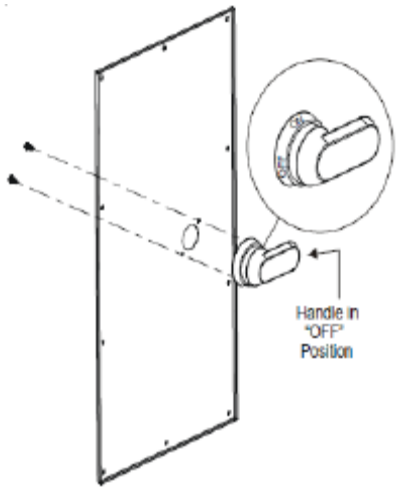


Figure A

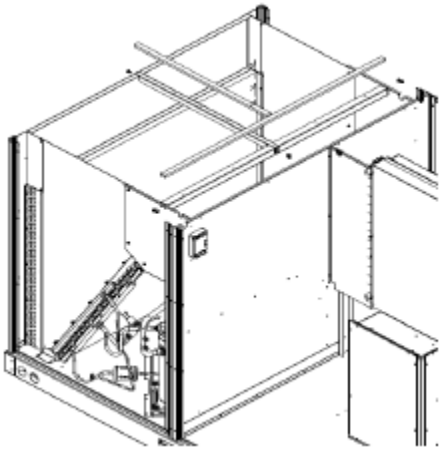

Figure B

Another positive change was made to the belt drive blower mounting bracket on the 3 – 6 ton units. This change was made in August and moves the motor from a tilted position to a flat position on the blower deck. The greatest benefit is the ease of adjustment when tensioning the belt and better alignment of the belt on the pulleys.

Lastly, pertaining to the 7.5 – 12.5 ton commercial product, a new “T” top brace has been added to give greater support for the condenser top panel. By adding this brace vibration has been greatly reduced to the top panel where in a few instances the vibration was causing screws to back out of the fans venture ring. The brace fits under the top panel as shown above in Figure B.



Goodman®
Air Conditioning & Heating

# For Those of You in the Field...

## by Michael Chandlee

The ability to properly and accurately measure superheat and subcooling and interpret the results is very likely the single most important skill that the HVAC Service technician can acquire. This article is intended to provide you with the essential information necessary to develop this skill.

As you read this article, keep one very important rule in mind:

**NO TEST IS VALID IF THE AIR FLOW IS NOT CORRECT!**

Before proceeding, make sure that all registers and grills are open, filters and coils are clean and that blowers and fans are running properly. The Temperature rise method of calculating air flow is simple and easy to perform and can save many unnecessary steps in your diagnosis by determining the actual air flow. The formula is:

$$CFM = \frac{BTUH(sensible)}{1.08\Delta T}$$

### SUPERHEAT

A vapor is said to be **"superheated"** when its temperature is higher than its saturation temperature at the same pressure. In a refrigeration or air-conditioning system, superheat is necessary to assure the maximum refrigerating effect from the refrigerant and to assure that no liquid refrigerant enters the compressor.

### CHECKING SUPERHEAT

Allow the system to operate for 15 to 20 minutes before checking superheat. This is to insure stable operation. If the temperatures and pressures will not stabilize, look for other problems before attempting to check superheat.

1. Attach a thermometer to the suction line near the sensing bulb on TEV equipped systems or near the suction service valve on fixed restrictor type systems (stay at least 18" away from the compressor dome if possible).
2. Record the suction line temperature.
3. Connect a manifold gauge set to the suction service port and record the suction pressure.
4. Use a pressure / temperature relationship chart and convert the suction pressure obtained to its corresponding saturtion temperature.
5. Subtract the saturated temperature from the actual line temperature - the resulting difference is the operating superheat.
6. Compare the superheat reading you obtained to the manufacturer's recommended superheat (an allowable range is usually specified).



Goodman®
Air Conditioning & Heating

Occasionally, the required superheat on a “fixed restrictor” system may be outside of the “safe” range for the compressor. This does not mean that the value is wrong – only that the system is operating outside of its design limits. Usually these conditions only last for a short time. If these conditions occur frequently, system design considerations must be made to compensate.

## HIGH SUPERHEAT

Excessive or high superheat is an indication of insufficient refrigerant in the evaporator coil for the heat load present. Some possible causes of high superheat are:

**[1] LOW REFRIGERANT CHARGE**:

If there is insufficient refrigerant in the system, all of the refrigerant will evaporate in the first few passes of the evaporator coil. The vapor will continue to pick up heat from the load as it passes through the remainder of the evaporator coil. The excess heat picked up by the vapor causes a higher than normal vapor temperature (superheat). In the case of a low charge, both suction and discharge pressures will be lower than normal. Sub-cooling will be lower than normal.

**[2] LIQUID LINE RESTRICTION**:

A restriction in the liquid line portion of the system will not allow adequate liquid refrigerant to reach the evaporator coil. This will cause many of the same symptoms as a low refrigerant charge, with the primary difference being the amount of sub-cooling. Often there is a noticeable temperature drop at the point of the restriction. Moisture in the system can freeze and block the flow of refrigerant. This most often occurs at the entrance to capillary tubes, in driers and expansion valves. With a liquid line partial restriction the suction pressure will be lower than normal and the discharge pressure will be normal to lower than normal. A complete restriction will cause both pressures to be much lower than normal (liquid pump-down)

**[3] EVAPORATOR AIR FLOW TOO HIGH**:

Excess air flow across the evaporator coil reduces the moisture removal capability (latent capacity) of the equipment. The refrigerant vapor picks up additional sensible heat which in turn causes higher than normal suction pressure and a higher than normal superheat.

**[4] EXCESSIVE LOAD CONDITIONS**:

Excessive load conditions will result in higher than normal heat content in the air crossing the evaporator. This excess heat will be absorbed by the refrigerant vapor, increasing its superheat. Abnormally high indoor ambient conditions or an increase in occupant load (such as a party) can cause an increase in superheat. When checking superheat, be sure that the load and ambient conditions are within the specified range.

**[5] METERING DEVICE NOT FEEDING PROPERLY**:

A restriction in a capillary tube, orifice or TEV will reduce the amount of liquid refrigerant entering the evaporator. Symptoms are the same as a Liquid Line Restriction.

## LOW SUPERHEAT

Low superheat indicates an excess of liquid refrigerant in the evaporator coil for the heat load present. In these cases it is likely that liquid refrigerant is present in the suction line and may possibly enter the compressor causing compressor failure. Some possible causes of low superheat are:

**[1] REFRIGERANT OVERCHARGE:**

An overcharge of refrigerant can force excess refrigerant into the evaporator due to the higher pressure differential across the metering device. The excess refrigerant does not absorb enough heat in the evaporator to completely vaporize, lowering the superheat. If the refrigerant does not absorb enough heat in the suction line to vaporize, liquid refrigerant will enter the compressor causing the damage mentioned earlier.

**[2] TEV OVERFEEDING:**

A TEV that is allowing too much refrigerant to enter the evaporator will cause a flooded coil similar to an overcharge. If the sensing bulb is not insulated or properly secured to the suction line, the valve will overfeed. When the valve overfeeds suction pressure increases and discharge pressure increases.

**[3] LOW EVAPORATOR AIR FLOW:**

Low evaporator air flow is the single most common cause of low superheat. Low air volume reduces the amount of warm air available to vaporize the refrigerant in the coil. This may prevent all of the liquid refrigerant from vaporizing causing the lower superheat. The liquid refrigerant may then enter the suction line and possibly enter the compressor as liquid causing compressor damage. In this situation, both suction and discharge pressures will be lower than normal. Dirty filters and coils, bad motors, closed registers and improperly sized duct systems can all reduce evaporator air volume.

**[4] IMPROPER METERING DEVICE:**

The wrong orifice, a capillary tube that is the wrong size or an improperly sized TEV will flood the evaporator with symptoms like those of a TEV overfeeding (see number 2).

**[5] EQUIPMENT OVERSIZED:**

When a system is greatly oversized for its load there is not enough heat available to completely vaporize the liquid refrigerant in the evaporator. The oversized unit wills most likely short cycle. Indoor relative humidity will likely be higher than normal with the oversized unit.

**[6] LOW CONDENSER AIR FLOW:**

Low condenser airflow increases condensing temperature thus increasing the pressure in the condenser coil. This delivers the refrigerant to the metering device at a higher initial pressure. The increased pressure drop across the metering device allows more refrigerant to flow. The result is lower superheat, high suction pressure, high discharge pressure and lower subcooling. The most common cause of low condenser air flow is a dirty coil. This condition could also be caused by bad motor bearings, defective capacitor, and shrubs or other obstructions around the unit.

**[7] RECYCLED CONDENSER AIR:**

Overhangs, shrubs or enclosures can cause the hot discharged condenser air to re-enter the coil inlet. This hot air increases condensing temperatures with the same results as low condenser air flow.

## SUBCOOLING

A liquid is subcooled when its temperature is below its saturation temperature at the same pressure. Measuring subcooling is a good method of confirming your diagnosis based on other tests. TEV systems must be charged by subcooling to ensure liquid is present at the valve before superheat readings or adjustments can be made.

Allow the unit to operate for 15 to 20 minutes before checking the subcooling. Attach an accurate thermometer to the liquid line near the inlet to the metering device if possible. A condenser outlet reading may be taken but will be in error by the amount of liquid line temperature/pressure losses. Record the temperature reading. Connect a manifold gauge set to the liquid service valve and record the pressure. Again, discharge pressure may be used but allowances must be made for condenser coil pressure drop. Using a Pressure/Temperature Chart, find the saturation temperature for the liquid pressure obtained. Subtract the line temperature from the saturation temperature. The difference is the amount of sub-cooling. Compare this reading with the manufacturer's data. If manufacturer's data is not available, subcooling at the condenser outlet of at least 10EF is usually acceptable.

Sub-cooling loss can be caused by long liquid lines, long vertical lifts, lines exposed to high ambient temperatures, low condenser air flow, and inadequate condenser size.

# Please Welcome...

Please join us in welcoming Michael Chandlee to our Technical Training team. Michael joined Goodman's Technical Services department in October. Prior to Goodman, he taught Heating, Ventilating, Air-Conditioning and Refrigeration for the Tennessee Technology Center in Pulaski, Tennessee for almost twenty years; and he developed the curriculum used by most of the Technology Centers in Tennessee.

Michael has certifications as a Professional Energy Auditor, L.E.E.D. Green Associate, HVAC Excellence Master Technician. He has N.A.T.E. certifications in Air-to-Air Heat Pump Service, Air Conditioning Service, Gas Combustion, Oil Combustion, Air Distribution, and Light Commercial Refrigeration. Michael is HVAC Excellence certified in Combustion Analysis, Carbon Monoxide Testing & Safety, Air-Conditioning Service, Gas Heating, Oil Heating, Refrigeration & Charging Procedures, HVACR Electrical and Electric Heat. He is AHRI Industry Competency Certified in Residential Air Conditioning, Light Commercial Air Conditioning and Commercial Refrigeration; and he is a certified test proctor for NATE, ESCO Institute, MACS, ACCA.

Michael is a very knowledgeable asset to Goodman and our Technical Training team.

# Service Bulletins

Below is a list of the Service Bulletins that have been released during the 2012 year. Copies of these service bulletins are available on Goodman's Partner Link website at http://partner.goodmanmfg.com. Once you log in to the website, click on "TOOLKIT", which is located at the top of or on the left-hand side of the webpage. Select either the "Amana Dealer Toolkit" or the "Goodman Dealer Toolkit" link. Next, select the "Service Tools" link, and then select the "Service Bulletin" link.

| | | |
|---|---|---|
| SA-020 | DATE: Oct 4, 2012 | SUBJECT: New HKA/HKP Heat Kits |
| SA-019 | DATE: June 1, 2012 | SUBJECT: HKR Heater Kits with HKS Instructions |
| SA-018 Rev. 1 | DATE: April 25, 2012 | SUBJECT: Updated LAKT Low Ambient Kit Instructions |
| SA-017 Rev 1 | DATE: August 13, 2012 | SUBJECT: New Website for Technical Training |
| SA-016 | DATE: March 2, 2012 | SUBJECT: Memory Chip Rework |
| SF-047 | DATE: Sept 27, 2012 | SUBJECT: Approval of Manufactured Vent Systems for High Efficiency Furnaces |
| SL-012 | DATE: Nov 16,2012 | SUBJECT: DNECONGS180240 Economizer Change |
| SL-011 | DATE: Oct 12, 2012 | SUBJECT: 7.5—12.5 ton "T" Top Brace |
| SL-010 | DATE: Nov 8, 2012 | SUBJECT: PCBFM131 Control Fuse |
| SL-009 Rev. 1 | DATE: July 2, 2012 | SUBJECT: Horizontal Discharge Kit |
| SL-008 | DATE: May 7, 2012 | SUBJECT: Utilizing Economizer Minimum Position on CPG Units |
| SR-044 Rev 3 | DATE: August 1, 2012 | SUBJECT: Return of Failed all Aluminum Coils |

Goodman
Air Conditioning & Heating

**Thank goodness for Goodman™.**

## Goodman Technical Services

1810 Wilson Parkway
Fayetteville, TN 37334
Tel: 1-888-593-9988
Fax: 1-713-316-5541
E-mail:
HACServicerSupport@goodmanmfg.com

Heating & Air Conditioning
Amana

**Lasts and Lasts and Lasts™.**

**We've become one of the largest manufacturers of residential and light commercial air conditioning, heating, and indoor air quality products and systems by focusing on just one thing-building the most reliable and refreshingly affordable indoor comfort products in the market.**

**The complete line if Goodman brand products are built on the principle of founder Harold Goodman, a former air conditioning contractor.**

**Harold's goal was to manufacture air conditioning and heating equipment that:**

- **Provides industry leading product warranties**
- **Offers greater reliability and longer-lasting performance than competing products**
- **Is designed for quick., trouble-free installations**
- **Makes reliable cooling and heating as affordable as possible.**

**Building our products to Harold's standards, and protecting those products with some of the best limited warranties in the industry, has helped to make the Goodman brand widely recognized as a leading brand in the residential and light commercial heating, ventilation and air conditioning industry today.**

**We're on the web!**

**www.goodmanmfg.com**