INTERFACE ADAPTER-AOR

DTA119A72
INSTALLATION MANUAL

IMPORTANT SAFETY INSTRUCTIONS

The following symbols and labels are used throughout this manual to indicate immediate or potential safety hazards. It is the owner's and installer's responsibility to read and comply with all safety information and instructions accompanying these symbols. Failure to heed safety information increases the risk of personal injury, property damage, and/or product damage.

⚠ WARNING

HIGH VOLTAGE!

DISCONNECT ALL POWER BEFORE SERVICING. MULTIPLE POWER SOURCES MAY BE PRESENT. FAILURE TO DO SO MAY CAUSE PROPERTY DAMAGE, PERSONAL INJURY OR DEATH.

⚠ WARNING

DO NOT BYPASS SAFETY DEVICES.

⚠ WARNING

ONLY PERSONNEL THAT HAVE BEEN TRAINED TO INSTALL, ADJUST, SERVICE, MAINTENANCE OR REPAIR (HEREINAFTER, "SERVICE") THE EQUIPMENT SPECIFIED IN THIS MANUAL SHOULD SERVICE THE EQUIPMENT.
THIS EQUIPMENT IS NOT INTENDED FOR USE BY PERSONS (INCLUDING CHILDREN) WITH REDUCED PHYSICAL, SENSORY OR MENTAL CAPABILITIES, OR LACK OF EXPERIENCE AND KNOWLEDGE, UNLESS THEY HAVE BEEN GIVEN SUPERVISION OR INSTRUCTION CONCERNING USE OF THE APPLIANCE BY A PERSON RESPONSIBLE FOR THEIR SAFETY.
CHILDREN SHOULD BE SUPERVISED TO ENSURE THAT THEY DO NOT PLAY WITH THE EQUIPMENT.
THE MANUFACTURER WILL NOT BE RESPONSIBLE FOR ANY INJURY OR PROPERTY DAMAGE ARISING FROM IMPROPER SUPERVISION, SERVICE OR SERVICE PROCEDURES. IF YOU SERVICE THIS UNIT, YOU ASSUME RESPONSIBILITY FOR ANY INJURY OR PROPERTY DAMAGE WHICH MAY RESULT. IN ADDITION, IN JURISDICTIONS THAT REQUIRE ONE OR MORE LICENSES TO SERVICE THE EQUIPMENT SPECIFIED IN THIS MANUAL, ONLY LICENSED PERSONNEL SHOULD SERVICE THE EQUIPMENT. IMPROPER SUPERVISION, INSTALLATION, ADJUSTMENT, SERVICING, MAINTENANCE OR REPAIR OF THE EQUIPMENT SPECIFIED IN THIS MANUAL, OR ATTEMPTING TO INSTALL, ADJUST, SERVICE OR REPAIR THE EQUIPMENT SPECIFIED IN THIS MANUAL WITHOUT PROPER SUPERVISION OR TRAINING MAY RESULT IN PRODUCT DAMAGE, PROPERTY DAMAGE, PERSONAL INJURY OR DEATH.

© 2025 ***DAIKIN COMFORT TECHNOLOGIES MANUFACTURING, L.P.***

19001 Kermier Rd., Waller, TX 77484
www.daikincomfort.com

Amana® is a registered trademark of Maytag Corporation or its related companies and is used under license. All rights reserved.

Index

IMPORTANT SAFETY INSTRUCTIONS.....1
SHIPPING INSPECTION 3
CODES & REGULATIONS 3
FEATURES 4
ACCESSORIES 4
SAFETY CONSIDERATIONS 5
APPLICATION.....7
INSTALLATION.....8
ELECTRIC WIRING WORK 9
WIRING DIAGRAM 10
DEHUMIDIFICATION SETTING.....14
TROUBLESHOOTING 19

SHIPPING INSPECTION

Shipping damage, and subsequent investigation is the responsibility of the carrier. The distributor or manufacturer will not accept claims from dealers for transportation damage or installation of incorrectly shipped units.

CODES & REGULATIONS

This product is designed and manufactured to comply with national codes. Installation in accordance with such codes and/or prevailing local codes/ regulations is the responsibility of the installer. Please refer to the Codes & Regulations in outdoor unit Installation and Operation manuals.

This device complies with Part 15 of the FCC's Rules. Operation of this device is subject to two conditions:
(1) This device may not cause harmful interference; and
(2) This device must accept any interference received, including interference that may cause undesirable operation.
And this device meets the applicable Industry Canada technical specifications. CAN ICES-3(B)/NMB-3(B)

The FCC responsible party is Daikin Comfort Technologies Manufacturing, L.P., and may be contacted by calling (713)-861-2500, or at 19001 Kermier Rd., Waller, TX 77484. (www.daikincomfort.com)

Changes or modifications not expressly approved by the party responsible for compliance could void the user's authority to operate the equipment.

NOTE: This equipment has been tested and found to comply with the limits for a Class B digital device, pursuant to part 15 of the FCC Rules. These limits are designed to provide reasonable protection against harmful interference in a residential installation. This equipment generates, uses and can radiate radio frequency energy and, if not installed and used in accordance with the instructions, may cause harmful interference to radio communications. However, there is no guarantee that interference will not occur in a particular installation. If this equipment does cause harmful interference to radio or television reception, which can be determined by turning the equipment off and on, the user is encouraged to try to correct the interference by one or more of the following measures:

- Reorient or relocate the receiving antenna.
- Increase the separation between the equipment and receiver.
- Connect the equipment into an outlet on a circuit different from that to which the receiver is connected.
- Consult the dealer or an experienced radio/ TV technician for help.

FEATURES

This interface adapter is part of a system that uses inverter technology to efficiently remove heat and achieve the target comfort conditions. This adapter is designed to be compatible with non-communicating gas furnaces.

NOTE: The installation of the adaptor with unmatched system units will not allow for proper operation.

NOTE: Furnace integration kit is required unless using Daikin, Amana® Brand, or Goodman R32 non-communicating furnace with integrated A2L sensor connection.
See the wiring diagrams on the following pages.

ACCESSORIES

Name	① Installation manual	② Screw (M4 x 16 mm)	③ Screw (M4 x 10 mm)
Shape			
Quantity	1	2	4 (Including 2 spares)

Name	④ Clamp	⑤ Wiring terminal (Use for X1A)	⑥ Sealing material
Shape		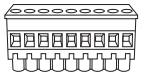	
Quantity	1	1	1

SAFETY CONSIDERATIONS

Read these Safety considerations for Installation carefully before installing the adapter. After completing the installation, make sure that the unit operates properly during the system start-up operation. Instruct the customer on how to operate and maintain the unit. Inform customers that they should store this Installation Manual for future reference.
Always use a licensed installer or contractor to install this product. Improper installation can result in water or refrigerant leakage, electrical shock, fire, or explosion.

MEANINGS OF SYMBOLS

⚠ **WARNING** ..... Indicates imminently or potentially hazardous situation which, if not avoided, will result in death or serious injury.

⚠ **CAUTION** ..... Indicates a potentially hazardous situation which, if not avoided, may result in minor or moderate injury. It may also be used to alert against unsafe practices.

NOTICE ..... Indicates situations that may result in equipment or property-damage accidents only.

While these items will not cover every conceivable situation, they should serve as a useful guide.

⚠ WARNING

- **DO NOT GROUND UNITS TO WATER PIPES, SUCTION LINE, TELEPHONE WIRES, OR LIGHTNING RODS AS INCOMPLETE GROUNDING WILL RESULT A SEVERE SHOCK HAZARD RESULTING IN SEVERE INJURY OR DEATH. ADDITIONALLY, GROUNDING TO GAS PIPES WILL RESULT A GAS LEAK AND POTENTIAL EXPLOSION RESULTING IN SEVERE INJURY OR DEATH.**
- **SAFELY DISPOSE ALL PACKING AND TRANSPORTATION MATERIALS IN ACCORDANCE WITH FEDERAL/STATE/LOCAL LAWS OR ORDINANCES. PACKING MATERIALS INCLUDING PLASTIC PACKING MATERIALS USED FOR TRANSPORTATION WILL RESULT IN INJURIES OR DEATH BY SUFFOCATION.**
- **ONLY QUALIFIED PERSONNEL MUST CARRY OUT THE INSTALLATION WORK. INSTALLATION MUST BE DONE IN ACCORDANCE WITH THIS INSTALLATION MANUAL. IMPROPER INSTALLATION COULD RESULT IN WATER LEAKAGE, ELECTRIC SHOCK, OR FIRE.**
- **USE ONLY SPECIFIED ACCESSORIES AND PARTS FOR INSTALLATION WORK. FAILURE TO USE SPECIFIED PARTS COULD RESULT IN WATER LEAKAGE, ELECTRIC SHOCKS, FIRE, OR THE UNIT FALLING.**
- **INSTALL THE ADAPTER ON A PLACE STRONG ENOUGH THAT IT CAN WITHSTAND THE WEIGHT OF THE UNIT.**
  A PLACE OF INSUFFICIENT STRENGTH COULD RESULT IN THE UNIT FALLING AND CAUSING INJURIES.
- **MAKE SURE THAT A SEPARATE POWER SUPPLY CIRCUIT IS PROVIDED FOR THIS UNIT AND THAT ALL ELECTRICAL WORK IS CARRIED OUT BY QUALIFIED PERSONNEL ACCORDING TO LOCAL, STATE AND NATIONAL REGULATIONS. AN INSUFFICIENT POWER SUPPLY CAPACITY OR IMPROPER ELECTRICAL CONSTRUCTION COULD RESULT IN ELECTRIC SHOCKS OR FIRE.**

APPLICATION

This system is designed to work with the thermostats listed below.
- Daikin *One+* Smart
- Daikin *One* Touch Smart
- Amana Brand Smart
- Goodman Smart

(Not available for CTK04 or other thermostats)
This system can be paired with conventional gas furnaces (single-stage or two-stage).

Allowed indoor and outdoor unit combinations

Please refer to *DAIKIN CITY* or *PartnerLink* for the available indoor and outdoor unit combinations.

NOTICE

All AHRI (Air Conditioning, Heating and Refrigeration Institute) system ratings are accessible in the unitary matchup tool via *DAIKIN CITY* or in the DAIKIN system configurator tool via *PartnerLink*.

Allowable Air flow CFM range

Rated performance is based on fan speed changing under low load conditions. This lower airflow will also provide best dehumidification and comfort. The fan taps must be properly set to provide rated airflows. Please refer to Specification Sheets for correct airflow rates. Any airflow setting beyond the range specified may cause condensation, dehumidification, or compressor reliability issues.

Check the installation restrictions of each unit.
The latest Installation Manual can be obtained from the website "DAIKIN CITY (Installation Manual/Unitary Split System)" or "PartnerLink (Info-FinderPlus/ Literature)".

[DAIKIN CITY URL]
https://www.daikincity.com/Library/
[PartnerLink URL]
https://partnerlinkmarketing.goodmanmfg.com/goodman/info-finder-plus

INSTALLATION

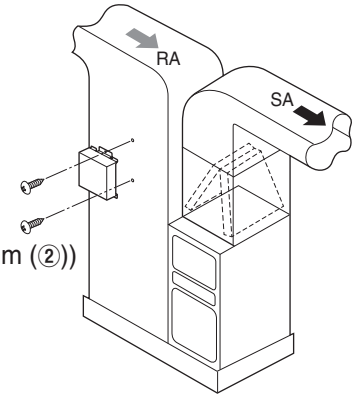

Screw
(accessory: M4×16 mm (②))

Mount the adapter with the screws (accessory: M4×16 mm (②)) on a place which has sufficient strength and stability.
(Return air duct, beams, pillars, walls, or other place which can support this adapter appropriately)
DO NOT mount this adapter in a place has risk of vibration or water droplets.
Please refer to the wiring diagram part for adding a standard single-pole double-throw (SPDT) relay when needed. This user-supplied SPDT relay will be installed in the existing furnace.

⚠ CAUTION

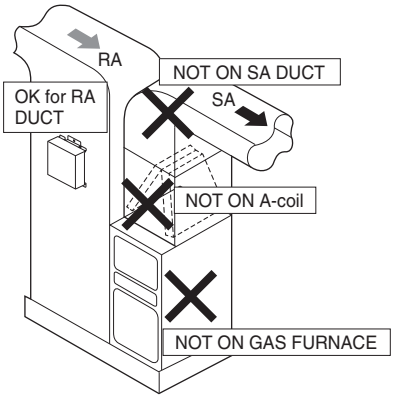

Do NOT mount DTA119A72 to any supply duct. Also, avoid mounting the adapter directly to any air handler, furnace, hot water coil or evaporator cabinet in the area. Otherwise, this may cause damages to those parts.

ELECTRIC WIRING WORK

1. Connect the wires to the devices according to the wiring diagrams on following pages. The connections are different due to different gas furnaces (single-stage or two-stage) and whether furnace integration kit is required.
2. Connect the ground wire to the grounding screw.
3. It is not recommended to insert multiple wires into a single terminal block. Using wire nuts is recommended to avoid this.

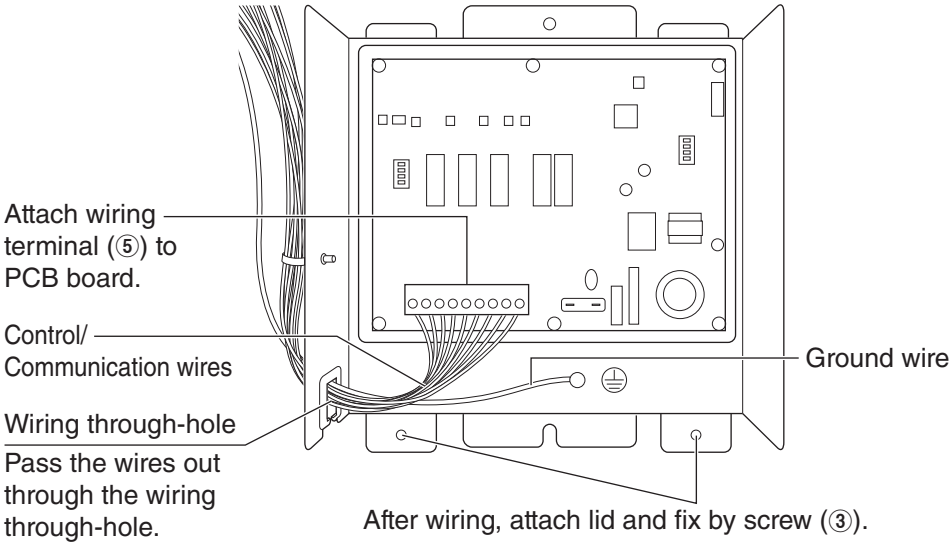

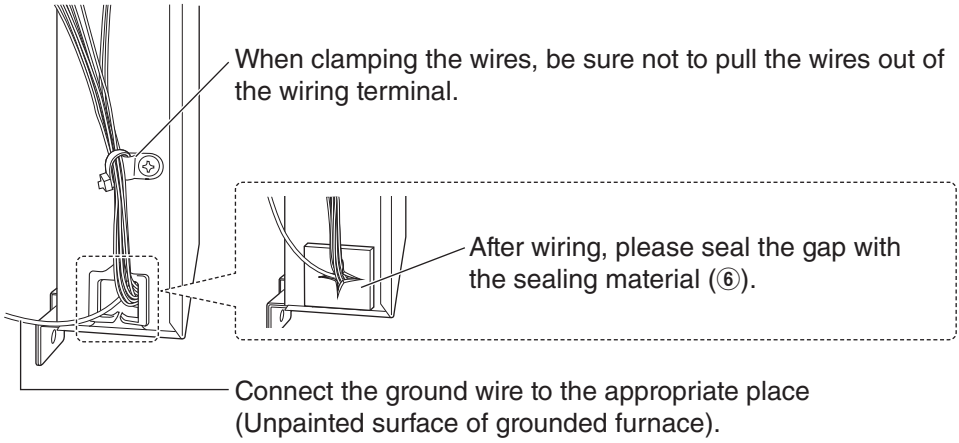

WIRING DIAGRAM
WITH FURNACE INTEGRATION KIT

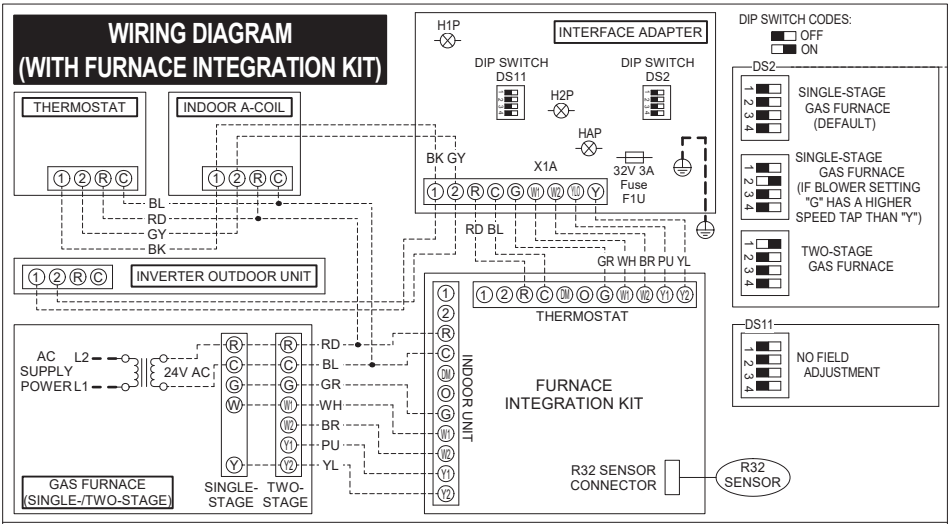

NOTES:
1) THE SIZE FOR WIRES USED IN X1A MUST BE WITHIN THE RANGE OF 12 TO 24 AWG, WITH TEMPERATURE RATING OF AT LEAST 105 °C .
2) UNIT MUST BE PERMANENTLY GROUNDED AND CONFIRM TO N.E.C AND LOCAL CODES.
3) CONNECT THE CORRECT TERMINALS IN FURNACE DUE TO DIFFERENT TYPES OF FURNACE.
4) ADJUST DS2 DUE TO DIFFERENT SCENARIOS LISTED NEXT TO THE WIRING DIAGRAM.
5) PLEASE MAKE SURE THE TRANFORMER IN GAS FURNACE HAS THE SUFFICIENT POWER TO SUPPORT THIS ADAPTER (8 VA).
6)THIS DIAGRAM IS INTENDED FOR NON-COMMUNICATING FURNACES.
7) FOR DAIKIN, AMANA, OR GOODMAN R32 NON-COMMUNICATING FURNACE** APPLICATIONS, THE FURNACE INTEGRATION KIT IS NOT REQUIRED. REFER TO IO MANUAL FOR WIRING DIAGRAM WITHOUT FURNACE INTEGRATION KIT. (** MEANING FURNACE WITH A2L SENSOR CONNECTION.)
8) FOR THE SINGLE-STAGE FURNACE APPLICATION OF ADDING A RELAY, REFER TO IO MANUAL FOR WIRING DIAGRAM.
9) FOR R410A APPLICATION, REFER TO IO MANUAL FOR WIRING DIAGRAM WITHOUT FURNACE INTEGRATION KIT.

H2P(DIAGNOSTIC LED) INDICATIONS:
- 3 FLASHES: THERMOSTAT COMMUNICATION ERROR
- 4 FLASHES: EQUIPMENT COMMUNICATION ERROR DURING OPERATION
- 5 FLASHES: EQUIPMENT COMMUNICATION ERROR DURING START UP
- 6 FLASHES: ABNORMAL COMBINATION

COMPONENT CODES:
- LOW VOLTAGE FIELD
- HIGH VOLTAGE FIELD
- CONNECTOR
- ELECTRICAL GROUND
- Fuse
- LED

COLOR CODES:

BL-BLUE	BR-BROWN
RD-RED	WH-WHITE
GY- GREY	YL- YELLOW
BK-BLACK	PU-PURPLE
GR-GREEN	

3P795759-1

TERMINAL LABELS OF INTERFACE ADAPTER:

1 – COMMUNICATION SIGNAL	G – INDOOR FAN	W2 – HI HEATING
2 – COMMUNICATION SIGNAL	R – 24 V AC POWER	YLO – LO COOLING
C – 24 V AC COMMON	W1 – LO HEATING	Y – HI COOLING

Please notice the wiring length limit in the system. The wiring length from the adapter to outdoor unit should be less than 250 ft, from the adapter to gas furnace should be less than 100 ft, and from the adapter to the communicating thermostat should be less than 125 ft.

Wire with thermostat, indoor a-coil, outdoor unit and gas furnace according to the wiring diagram.

Wiring is subject to change. Always refer to the wiring diagram on the unit for the most up-to-date wiring.

The required wires are data lines 1 and 2 for communication, “R” (24 V AC power) and “C” (24 V AC common) for power supply. For single-stage furnaces, connect “G”, “W/W1”, and “Y/Y2” on the terminal interface adapter & furnace integration kit. (See WIRING DIAGRAM on next page for external relay wiring.) For two-stage furnaces, connect “W/W1”, “W2”, “YLO/Y1”, “Y/Y2” to the same terminal in the interface adapter & furnace integration kit, and change switch on “DS2” according to the wiring diagram.

WIRING DIAGRAM FOR THE SINGLE-STAGE FURNACE APPLICATION OF ADDING A RELAY

(THERMOSTAT AND A-COIL WIRING OMITTED)

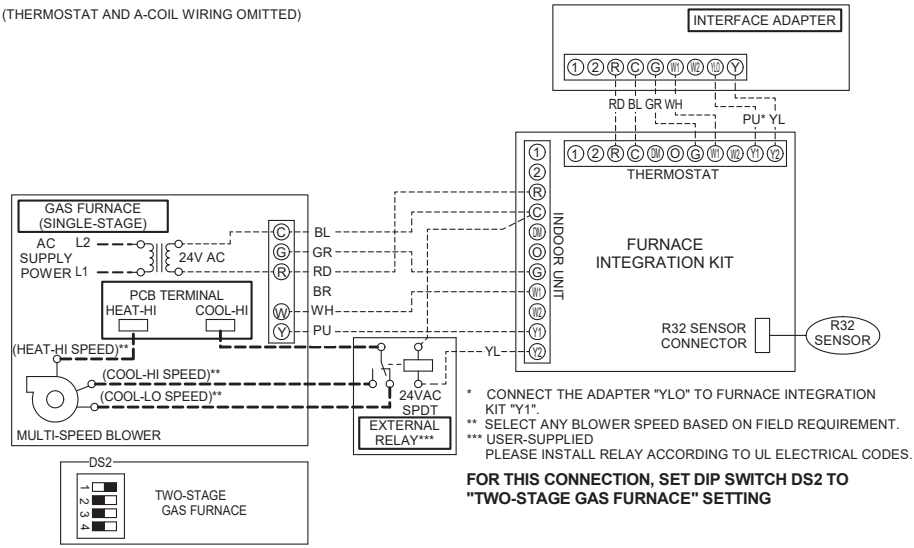

* CONNECT THE ADAPTER "YLO" TO FURNACE INTEGRATION KIT "Y1".
** SELECT ANY BLOWER SPEED BASED ON FIELD REQUIREMENT.
*** USER-SUPPLIED
PLEASE INSTALL RELAY ACCORDING TO UL ELECTRICAL CODES.

FOR THIS CONNECTION, SET DIP SWITCH DS2 TO "TWO-STAGE GAS FURNACE" SETTING

WIRING DIAGRAM FOR FLOAT SWITCH

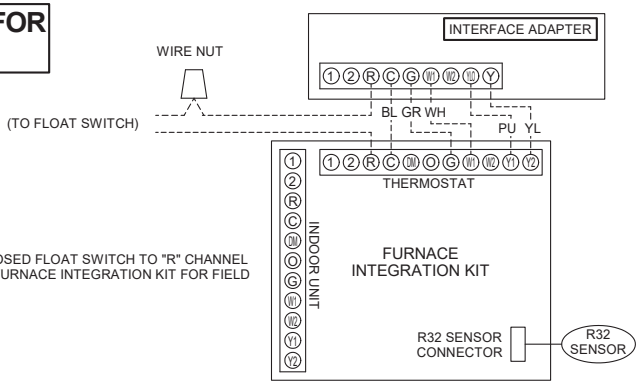

PLEASE CONNECT THE NORMALLY CLOSED FLOAT SWITCH TO "R" CHANNEL BETWEEN INTERFACE ADAPTER AND FURNACE INTEGRATION KIT FOR FIELD INSTALLATION.

WITHOUT FURNACE INTEGRATION KIT

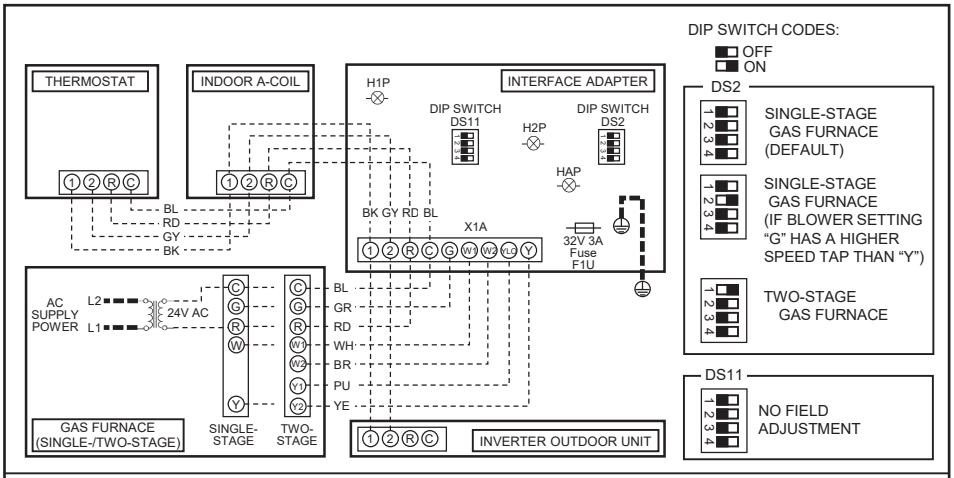

NOTES:

1. THE SIZE FOR WIRES USED IN X1A MUST BE WITHIN THE RANGE OF 12 TO 24 AWG, WITH TEMPERATURE RATING OF AT LEAST 105 ℃.
2. UNIT MUST BE PERMANENTLY GROUNDED AND CONFIRM TO N.E.C AND LOCAL CODES.
3. CONNECT THE CORRECT TERMINALS IN FURNACE DUE TO DIFFERENT TYPES OF FURNACE.
4. ADJUST DS2 DUE TO DIFFERENT SCENARIOS LISTED NEXT TO THE WIRING DIAGRAM.
5. PLEASE MAKE SURE THE TRANSFORMER IN GAS FURNACE HAS THE SUFFICIENT POWER TO SUPPORT THIS ADAPTER (8 VA).
6. FOR SINGLE-STAGE FURNACE APPLICATION OF ADDING RELAY, SEE WIRING DIAGRAM ON NEXT PAGE.

COMPONENT CODES:

- LOW VOLTAGE FIELD
- HIGH VOLTAGE FIELD
- CONNECTOR
- ELECTRICAL GROUND
- Fuse
- LED

H2P(DIAGNOSTIC LED) INDICATIONS:

- 3 FLASHES: THERMOSTAT COMMUNICATION ERROR
- 4 FLASHES: EQUIPMENT COMMUNICATION ERROR DURING OPERATION
- 5 FLASHES: EQUIPMENT COMMUNICATION ERROR DURING START UP
- 6 FLASHES: ABNORMAL COMBINATION

COLOR CODES:

BL – BLUE	BR – BROWN
RD – RED	WH – WHITE
GY – GREY	YL – YELLOW
BK – BLACK	PU – PURPLE
GR – GREEN	

WIRING DIAGRAM FOR THE SINGLE-STAGE FURNACE APPLICATION OF ADDING A RELAY

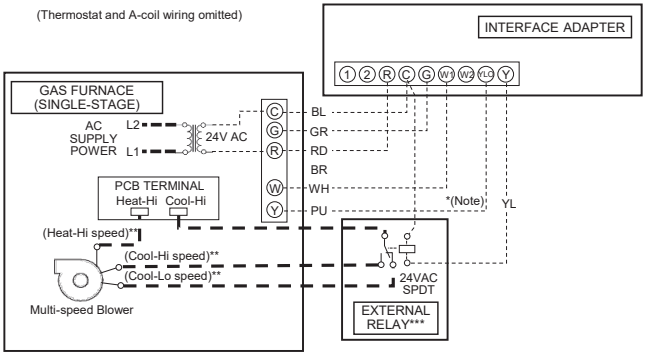

* Connect the adapter "YLO" to the furnace "Y"
** Select any blower speed based on field requirement
***User-supplied
Please install relay according to UL electrical codes.

For this connection, set DIP switch DS2 to "TWO-STAGE GAS FURNACE" setting

WIRING DIAGRAM FOR FLOAT SWITCH

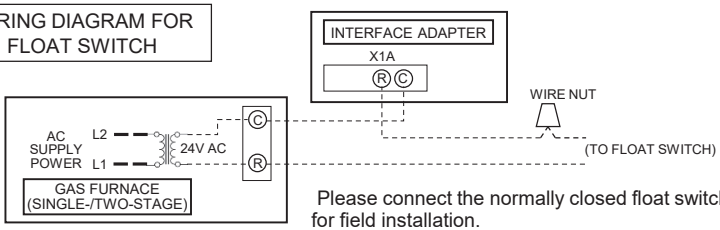

Please connect the normally closed float switch to "R" channel for field installation.

DEHUMIDIFICATION SETTING

The dehumidification performance will be improved by changing the setting in the communicating thermostat to “A” or “B” or “C”. Accordingly, the minimum compressor speed will be locked due to different setting. For example, by selecting “C” the minimum compressor speed will be fixed at 100% dehumidification capability. This operating range limitation will be unlocked when the humidity reaches the set value.
The default setting is “B”. Please select the proper setting due to your dehumidification demand or local climate. The setting can be changed from the dehumidification setting menu at any time when required. For instance, if “B” is still not adequate, you can select “C” to achieve the maximum dehumidification performance.

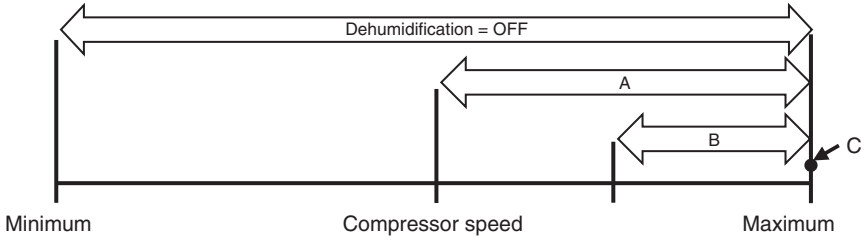

DEHUMIDIFICATION SET-UP ON Daikin *One*+ Smart Thermostat

For a system using the adapter, Daikin *One*+ Smart Thermostat allows customers to have a dehumidification profile setting to achieve different dehumidification performance due to different requirements.
Navigating to dealer edit will allow you to access the dehumidification set-up.

1. On the “HOME” screen, select the icon in the top right corner.

2. Select “settings”.

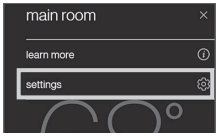

3. Select “configuration”.

4. Enter dealer edit mode by selecting “dealer edit”.

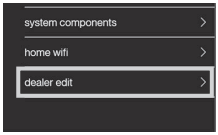

5. Select “continue”.

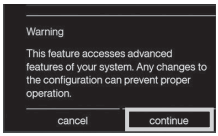

6. The installer code is need, and it can be found by referring to the icon in top right corner.

7. Find the unique installer code and enter the code, click “done” to unlock thermostat.

Example: c0fe →

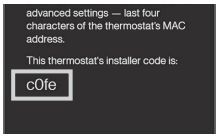

8. Choose the language and click “continue”.

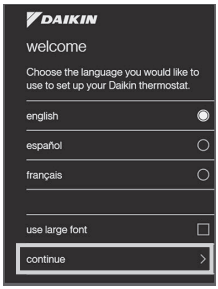

9. Select “unitary” and click “continue”.

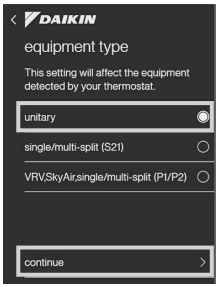

10. Select “begin setup”.

11. Choose “equipment setup”.

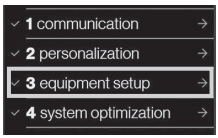

12. Select “air conditioner”, which is the outdoor unit in the system.

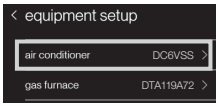

13. Select “cool settings”.

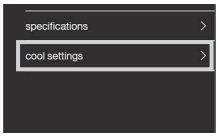

14. Select “dehumidification”.

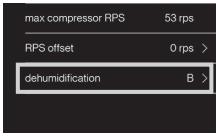

15. Select one of the settings according to your demand at this display.
“off” means no special dehumidification profile setting. “A” has the less dehumidification performance than the default setting “B”, while “C” has the maximum performance.

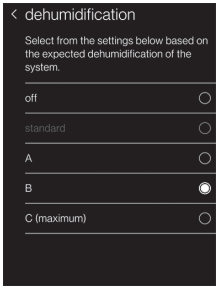

16. For example, select “C”.

17. And then go back to “cool settings”, confirm the selected profile is correct.

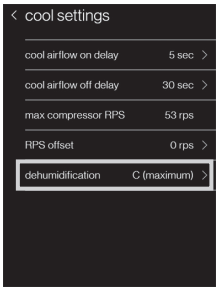

18. Go back to the main smart thermostat setup menu and choose “complete setup”.

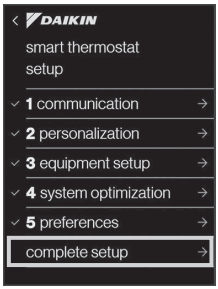

19. Last, click “continue” to finish all the setting. It will go back to “HOME” screen.

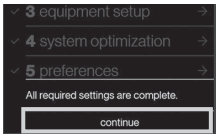

NOTE: The above instructions are for the Daikin *One*+ Smart and Daikin *One* Touch Smart Thermostat. For the Amana Brand and Goodman Smart Thermostats, please refer to the respective Thermostat Installation and Operation manuals.

7-SEGMENT DISPLAY SCREEN 3 (SETTING MODE 1)

Setting No.	Contents	Setting	Installer/Service Notes
7	Dehumidification Select	0:STD 2:A 4:C 1:OFF 3:B	

This setting can be set with the communicating thermostat or 7-segment. Please adjust the setting according to customer request.

TROUBLESHOOTING

As shown in wiring diagram, different LED lights show different status or errors. H1P indicates network traffic, H2P shows network status and HAP brinks means CPU is working.
The following fault code will be displayed on the thermostat. Also, the STATUS LED [H2P] on the circuit board blinks. Repair according to the details of the error.
For the other fault codes, refer to the Installation and operation manuals of the outdoor unit and indoor unit.

ClimateTalk Fault Code	STATUS LED [H2P] on interface adapter	Error message on Daikin *One+* Smart Thermostat	Probable Causes	Corrective Actions
D2	6 Flashes	Abnormal combination	• Abnormal system combination (Connection with non-applicable units)	• Check the availability of the combination of indoor unit and outdoor unit. • Check the non-communicating gas furnace
76	4 Flashes	Equipment communication error during operation	• Communication wiring with indoor unit has loose connection. • Communication wiring with outdoor unit has loose connection.	• Check communication wiring with indoor unit • Check communication wiring with outdoor unit
77	3 Flashes	Thermostat communication error	• Communication error between thermostat and interface adapter.	• Check communication wiring with thermostat
78	5 Flashes	Equipment communication error during start up	• No communication with outdoor unit. (Not detected outdoor unit.)	• Check communication wiring with outdoor unit

When the gas furnace shows any abnormal condition, refer to relevant manual for the gas furnace.
For Furnace Integration Kit troubleshooting, refer to relevant manual for Furnace Integration Kit board.

Check the installation restrictions of each unit.
The latest Installation Manual can be obtained from the website "DAIKIN CITY (Installation Manual/Unitary Split System)" or "PartnerLink (Info-FinderPlus/ Literature)".

[DAIKIN CITY URL]
https://www.daikincity.com/Library/
[PartnerLink URL]
https://partnerlinkmarketing.goodmanmfg.com/goodman/info-finder-plus

CUSTOMER FEEDBACK

Daikin is very interested in all product comments.

Please fill out the feedback form on the following link:

https://daikincomfort.com/contact-us

You can also scan the QR code on the right to be directed to the feedback page.

NOTE: SPECIFICATIONS AND PERFORMANCE DATA LISTED HEREIN ARE SUBJECT TO CHANGE WITHOUT NOTICE

© 2025 **DAIKIN COMFORT TECHNOLOGIES MANUFACTURING, L.P.**

19001 Kermier Rd., Waller, TX 77484

www.daikincomfort.com

Amana® is a registered trademark of Maytag Corporation or its related companies and is used under license. All rights reserved.

4P628731-2D EM24A012 (2502) SP