DAIKIN

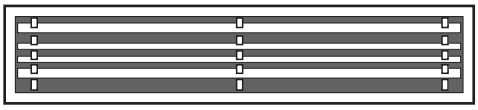

English

Français

Español

DAIKIN ROOM AIR CONDITIONER

INSTALLATION MANUAL

R410A Split Series

INVERTER

Installation manual

Manuel d'installation

Manual de instalación

MODELS

FDXS09LVJU
FDXS12LVJU
CDXS07LVJU
CDXS15LVJU
CDXS18LVJU
CDXS24LVJU

Safety Precautions

- Read these Safety Precautions carefully to ensure correct installation.
- This manual classifies the precautions into DANGER, WARNING and CAUTION.
  Be sure to follow all the precautions below: they are all important for ensuring safety.

⚠ **DANGER .....Indicates an imminently hazardous situation which, if not avoided, will result in death or serious injury.**

⚠ **WARNING .....Failure to follow any of WARNING is likely to result in such grave consequences as death or serious injury.**

⚠ **CAUTION .....Failure to follow any of CAUTION may in some cases result in grave consequences.**

- The following safety symbols are used throughout this manual:

Be sure to observe this instruction.	Be sure to establish an earth connection.	Never attempt.

- After completing installation, test the unit to check for installation errors. Give the user adequate instructions concerning the use and cleaning of the unit according to the Operation Manual.

⚠ DANGER
• Refrigerant gas is heavier than air and replaces oxygen. A massive leak could lead to oxygen depletion, especially in basements, and an asphyxiation hazard could occur leading to serious injury or death.
• If the refrigerant gas leaks during installation, ventilate the area immediately. Refrigerant gas may produce a toxic gas if it comes in contact with fire such as from a fan heater, stove or cooking device. Exposure to this gas could cause severe injury or death.
• After completing the installation work, check that the refrigerant gas does not leak. Refrigerant gas may produce a toxic gas if it comes in contact with fire such as from a fan heater, stove or cooking device. Exposure to this gas could cause severe injury or death.
• Do not ground units to water pipes, telephone wires or lightning rods because incomplete grounding could cause a severe shock hazard resulting in severe injury or death, and to gas pipes because a gas leak could result in an explosion which could lead to severe injury or death.
• Safely dispose of the packing materials. Packing materials, such as nails and other metal or wooden parts, may cause stabs or other injuries. Tear apart and throw away plastic packaging bags so that children will not play with them. Children playing with plastic bags face the danger of death by suffocation.
• Do not install unit in an area where flammable materials are present due to risk of explosion resulting in serious injury or death.
• Do not ground units to telephone wires or lightning rods because lightning strikes could cause a severe shock hazard resulting in severe injury or death, and to gas pipes because a gas leak could result in an explosion which could lead to severe injury or death.

⚠ WARNING
• Installation shall be left to the authorized dealer or another trained professional. Improper installation may cause water leakage, electrical shock, fire, or equipment damage.
• Install the air conditioner according to the instructions given in this manual. Incomplete installation may cause water leakage, electrical shock, fire or equipment damage.
• Be sure to use the supplied or exact specified installation parts. Use of other parts may cause the unit to come to lose, water leakage, electrical shock, fire or equipment damage.
• Install the air conditioner on a solid base that is level and can support the weight of the unit. An inadequate base or incomplete installation may cause injury or equipment damage in the event the unit falls off the base or comes loose.
• Electrical work shall be carried out in accordance with the installation manual and the national, state and local electrical wiring codes. Insufficient capacity or incomplete electrical work may cause electrical shock, fire or equipment damage.
• Be sure to use a dedicated power circuit. Never use a power supply shared by another appliance. Follow all appropriate electrical codes.
• For wiring, use a wire or cable long enough to cover the entire distance with no splices if possible. Do not use an extension cord. Do not put other loads on the power supply. Use only a separate dedicated power circuit. (Failure to do so may cause abnormal heat, electric shock, fire or equipment damage.)
• Use the specified types of wires for electrical connections between the indoor and outdoor units. Follow all state and local electrical codes. Firmly clamp the interconnecting wires so their terminals receive no external stresses. Incomplete connections or clamping may cause terminal overheating, fire or equipment damage.

Safety Precautions

⚠ WARNING
• After connecting all wiring be sure to shape the cables so that they do not put undue stress on the electrical covers, panels or terminals. Install covers over the wires. Incomplete cover installation may cause terminal overheating, electrical shock, fire or equipment damage.
• When installing or relocating the system, be sure to keep the refrigerant circuit free from all substances other than the specified refrigerant (R410A), such as air. (Any presence of air or other foreign substance in the refrigerant circuit causes an abnormal pressure rise which may result in rupture, resulting in injury.)
• During pump-down, stop the compressor before removing the refrigerant piping. If the compressor is still running and the shut-off valve is open during pump-down, air will be sucked in when the refrigerant piping is removed, causing abnormally high pressure which could lead to equipment damage or and personal injury.
• During installation, attach the refrigerant piping securely before running the compressor. If the refrigerant pipes are not attached and the shut-off valve is open when the compressor is run, air will be sucked in, causing abnormal pressure in the refrigeration cycle, which may result in equipment damage and even injury.
• Install a leak circuit breaker, as required. If a leak circuit breaker is not installed, electric shock may result.
• Be sure to install a ground fault circuit interrupter breaker. Failure to install a ground fault circuit interrupter breaker may result in electrically shocks or personal injury.

⚠ CAUTION
• Establish drain piping according to the instructions of this manual. Inadequate piping may cause water damage.
• Note for installing the outdoor unit. (For heat pump model only.) In regions of the country where the outside temperature is at or below the freezing point, the drain may freeze. If so, it is recommended that an electric heater be installed in order to protect the drain from freezing.
• Tighten the flare nut according to the specified torque. A torque wrench should be used. If the flare nut is tightened too much, the flare nut may crack over time and cause refrigerant leakage.
• Do not touch the heat exchanger fins. Improper handling may result in injury.
• Be very careful about product transportation. Some products use PP bands for packaging. Do not use any PP bands for a means of transportation. It is dangerous.

Accessories

Clamp metal	Insulation for fitting	Sealing pad			Drain hose	Washer for hanger bracket	Sealing material	Clamp	Washer fixing plate	Screws for duct flanges
1 pc.	1 each	Large and small 1 each	3 pcs. (only for CDXS)	1 pc.	1 pc.	8 pcs.	2 pcs.	6 pcs.	1 set	1 set
	for gas pipe for liquid pipe	Large Small	2 large 1 small Stored in outlet vent	Hanger (right) insulation				One is spare	4 pcs.	24 pcs.

Conduit mounting plate	Screws for conduit mounting plate	Insulation tube	Air filter	Wireless remote controller	Remote controller holder	Dry battery AAA. LR03 (alkaline)	Receiver kit		
1 pc.	2 pcs.	1 pc.	1 pc.	1 pc.	1 pc.	1 set	1 pc.	1 pc.	2 pcs.
						2 pcs.	Mounting frame	Decorative cover	Screws M4 × 25

[Other]	• Operation manual • Installation manual

Choosing an Installation Site

• Before choosing the installation site, obtain user approval.

1. Indoor unit

⚠ CAUTION

- When moving the unit during or after unpacking, make sure to lift it by holding its lifting lugs. Do not exert any pressure on other parts, especially the refrigerant piping, drain piping and flange parts.
  Wear protective gear (such as gloves) when installing the unit.
- If you think the humidity inside the ceiling might exceed 86°F (30°C) and RH80%, reinforce the insulation on the unit body. Use glass wool or polyethylene foam as insulation so that the thickness is more than 0.4in (10mm) and fits inside the ceiling opening.

- Optimum air distribution is ensured.
- The air passage is not blocked.
- Condensate can drain properly.
- The ceiling is strong enough to bear the weight of the indoor unit.
- A false ceiling does not seem to be at an incline.
- Sufficient clearance for maintenance and servicing is ensured.
- Piping between the indoor and outdoor units is within the allowable limits. (Refer to the installation manual for the outdoor unit.)
- The indoor unit, outdoor unit, power supply wiring and transmission wiring is at least 3.3ft (1m) away from televisions and radios. This prevents image interference and noise in electrical appliances. (Noise may be generated depending on the conditions under which the electric wave is generated, even if a 3.3ft (1m) allowance is maintained.)

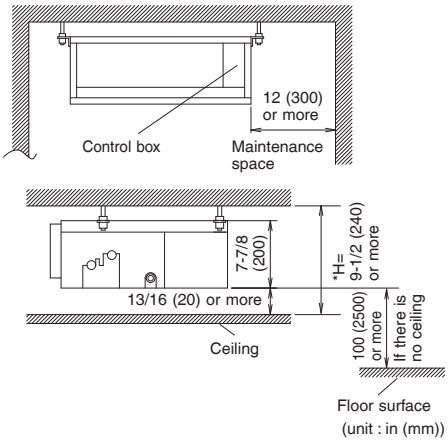

■ **Use suspension bolts to install the unit. Check whether or not the ceiling is strong enough to support the weight of the unit. If there is a risk that the ceiling is not strong enough, reinforce the ceiling before installing the unit.**

(Installation pitch is marked on the carton box for installation. Refer to it to check for points requiring reinforcing.) Select the *H dimension such that a downward slope of at least 1/100 is ensured as indicated in "**Drain Piping Work**".

- The installation pitch is listed on the packing material, and should be checked when deciding whether to reinforce the location or not.

■ **Select the signal receiver mounting location according to the following conditions:**

- Install the signal receiver, which has a built-in temperature sensor, near the intake vent where there is convection of air and it can get an accurate reading of the room's temperature. If the intake vent is in another room or the unit cannot be installed near the intake vent for any other reason, install it 5ft (1.5m) above the floor on a wall where there is convection.
- In order to get an accurate reading of the room's temperature, install the signal receiver in a location where it is not exposed directly to cold or hot air from the air discharge grille or to direct sunlight.
- Since the receiver has a built-in light receptor to receive signals from the wireless remote controller, do not mount it in a location where the signal may be blocked by a curtain, etc.

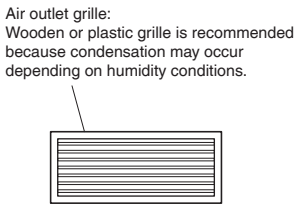

⚠ CAUTION

If the signal receiver is not installed in a location where there is convection of air, it may be unable to get an accurate reading of the room's temperature.

Choosing an Installation Site

2. Wireless remote controller

- Turn on all the fluorescent lamps in the room, if any, and find the site where remote controller signals are properly received by the indoor unit (within 13ft (4m)).

3. Outdoor unit

- For outdoor unit installation, see the installation manual supplied with the outdoor unit.

Preparations before Installation

■ Relation of the unit to the suspension bolt positions.

- Install the inspection opening on the control box side where maintenance and inspection of the control box are easy. Install the inspection opening also in the lower part of the unit.

■ Make sure the range of the unit's external static pressure is not exceeded.

(See the technical documentation for the range of the external static pressure setting.)

■ Open the installation hole. (Pre-set ceilings)

- Once the installation hole is opened in the ceiling where the unit is to be installed, pass refrigerant piping, drain piping, transmission wiring, and remote controller wiring (unneeded if using a wireless remote controller) to the unit's piping and wiring holes. See "**Refrigerant Piping Work**", "**Drain Piping Work**", and "**Wiring**".
- After opening the ceiling hole, make sure ceiling is level if needed. It might be necessary to reinforce the ceiling frame to prevent shaking. Consult an architect or carpenter for details.

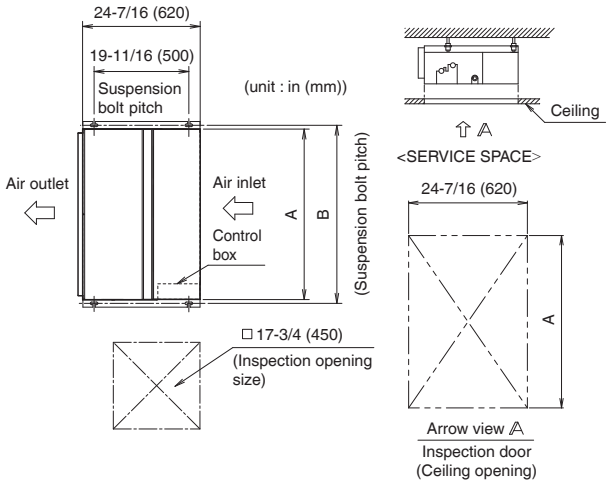

	FDXS09/12 CDXS07	CDXS15/18	CDXS24
A	27-9/16 (700)	35-7/16 (900)	43-5/16 (1000)
B	29-1/8 (740)	37 (940)	44-7/8 (1140)

■ Install the suspension bolts.

(Use W3/8 to M10 suspension bolts.)

- Use a hole-in-anchor, sunken insert, sunken anchor for existing ceilings, and a sunken insert, sunken anchor or other part to be procured in the field to reinforce the ceiling to bearing the weight of the unit. (Refer to Fig.)

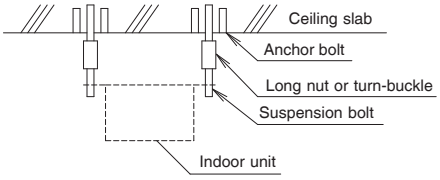

Note: All the above parts are field supplied.

■ Mount chamber cover and air filter (accessory).

For bottom intake, replace the chamber cover and the protection net in the procedure listed in Fig.

(1) Remove the protection net. (6 locations)
Remove the chamber cover. (7 locations)

(2) Reattach the removed chamber cover in the orientation shown in Fig. (7 locations)
Reattach the removed protection net in the orientation shown in Fig. (6 locations)
Refer to Fig. for the direction of the protection net.

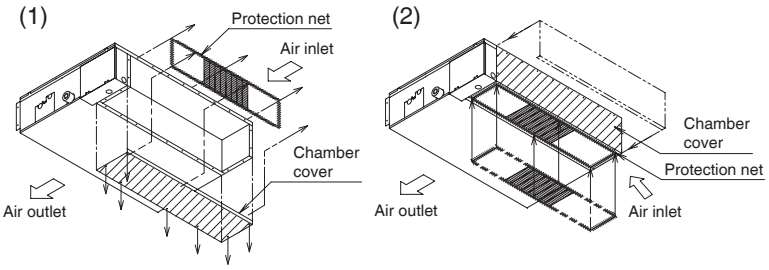

(3) Attach sealing pad as shown in the right figure. (Stored in outlet vent) (only for CDXS)
(In order to take in the air inside the ceiling, and when not taking in air from outdoor air, it is not necessary to stick.)
- Attach the sealing pad (accessory) to the plate metal sections which are not covered by anti-sweat material.
- Make sure there are no gaps between the different pieces of sealing pad.

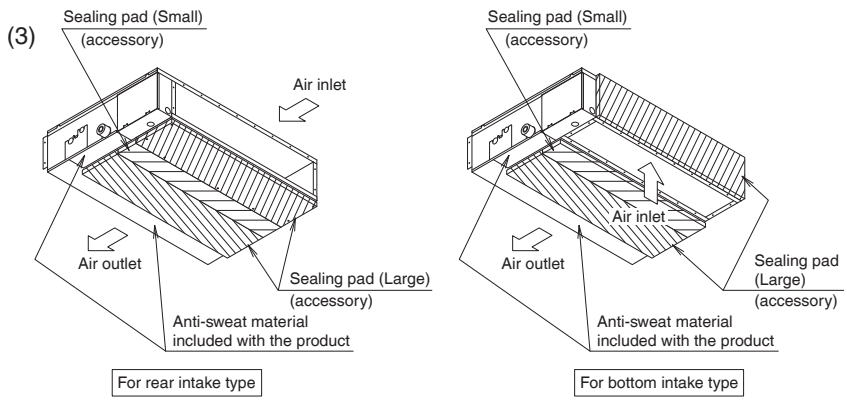

(4) Attach the hanger (right) insulation to the right hanger. (Stored in outlet vent)
(See the below figure for the sticking base line.)

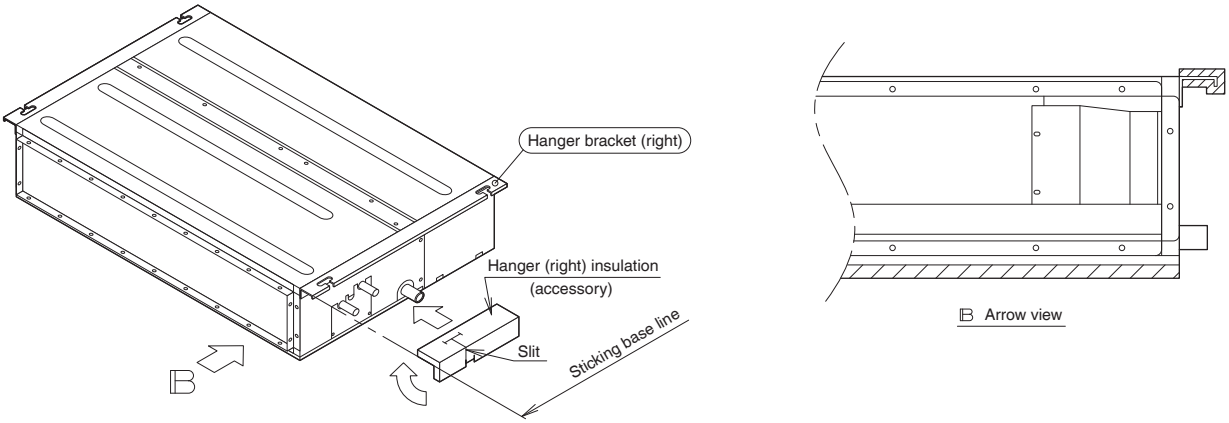

(5) Attach the air filter (accessory) in the manner shown in the diagram.

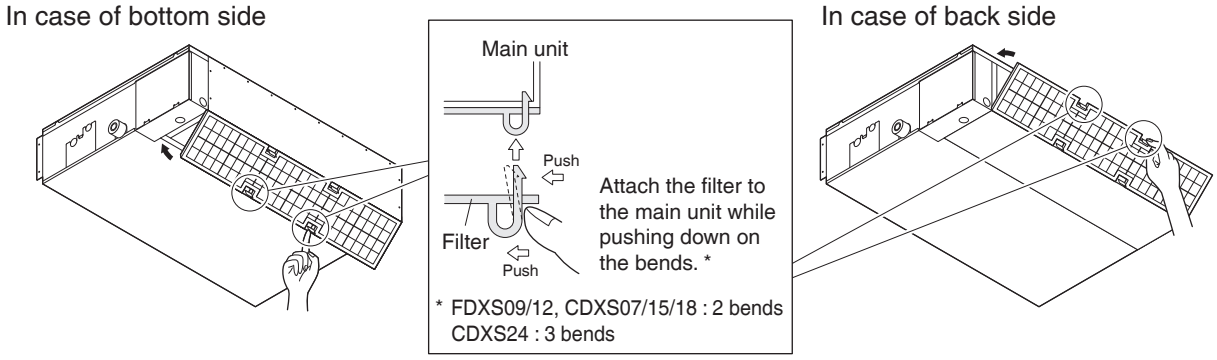

■ **When two indoor units are installed in one room, one of the two wireless remote controllers can be easily set for another addresses.**

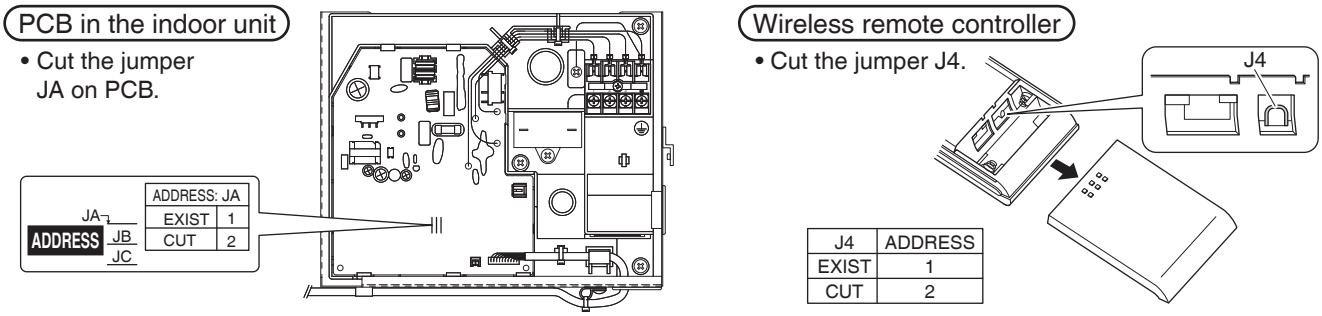

Indoor Unit Installation

<< As for the parts to be used for installation work, be sure to use the provided accessories and specified parts designated by our company. >>

■ Install the indoor unit temporarily.

- Attach the hanger bracket to the suspension bolt. Be sure to fix it securely by using a nut and washer from the upper and lower sides of the hanger bracket. (Refer to Fig.)

[PRECAUTION]
Since the unit uses a plastic drain pan, prevent welding spatter and other foreign substances from entering the outlet hole during installation.

[Securing the hanger bracket]

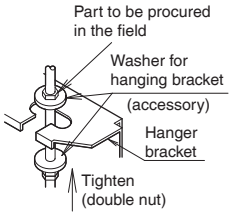

[How to secure washers]

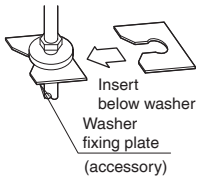

■ Adjust the height of the unit.

■ Check the unit is horizontally level.

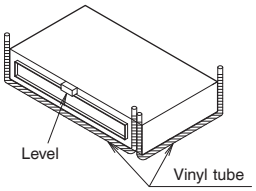

⚠ CAUTION

- Make sure the unit is installed level using a level or a plastic tube filled with water. In using a plastic tube instead of a level, adjust the top surface of the unit to the surface of the water at both ends of the plastic tube and adjust the unit horizontally. (One thing to watch out for in particular is if it is installed so that the slope is not in the direction of the drain piping, as this might cause leaking.)

■ Tighten the upper nut.

■ Mounting the receiver.

Mount the receiver as shown below.

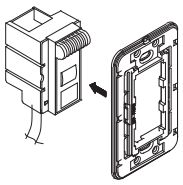

① Press the receiver into the mounting frame.

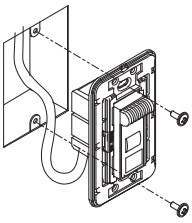

② Mount the completed assembly using two screws.

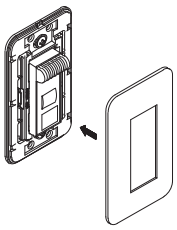

③ Press the decorative cover into the mounting frame.

Note) Mount the Remote controller cord far enough away from strong electrical wires (such as distribution wires for electrical lights, air conditioners, etc.) and from weak electrical wires (such as wires for telephones, intercoms, etc.).

For heat pump: If your feet feel cold when using the heating function, it is recommended that the air outlet grille shown at below be attached.

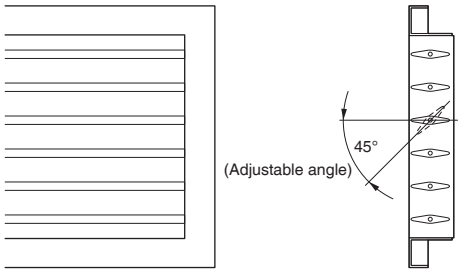

Outdoor unit Installation

Install as described in the installation manual supplied with the outdoor unit.

Refrigerant Piping Work

See the installation manual supplied with the outdoor unit.

1. Flaring the pipe end

1) Cut the pipe end with a pipe cutter.
2) Remove burrs with the cut surface facing downward so that the chips do not enter the pipe.
3) Put the flare nut on the pipe.
4) Flare the pipe.
5) Check that the flaring is properly made.

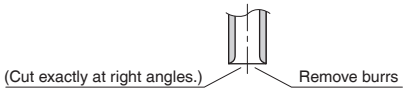

Flaring

Set exactly at the position shown below.

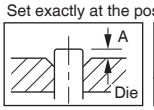

	Flare tool for R410A	Conventional flare tool	
	Clutch-type	Clutch-type (Rigid-type)	Wing-nut type (Imperial-type)
A	0-0.02in (0-0.5mm)	0.04-0.06in (1.0-1.5mm)	0.06-0.08in (1.5-2.0mm)

Check

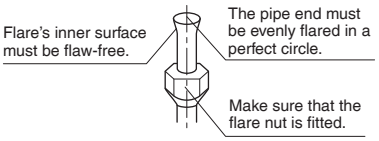

⚠ WARNING

- Do not use mineral oil on flared part.
- Prevent mineral oil from getting into the system as this would reduce the lifetime of the units.
- Never use piping which has been used for previous installations. Only use parts which are delivered with the unit.
- Never install a drier to this R410A unit in order to guarantee its lifetime.
- The drying material may dissolve and damage the system.
  Incomplete flaring may cause refrigerant gas leakage.

2. Refrigerant piping

1) To prevent gas leakage, apply refrigeration machine oil to the inner surface of the flare. (Use refrigeration oil for R410A)

2) Align the centers of both flares and tighten the flare nuts 3 or 4 turns by hand. Then tighten them fully with the torque wrenches.
   - Use torque wrenches when tightening the flare nuts to prevent damage to the flare nuts and escaping gas.

Flare nut tightening torque			
Gas side			Liquid side
3/8 inch (9.5mm)	1/2 inch (12.7mm)	5/8 inch (15.9mm)	1/4 inch (6.4mm)
24.1-29.4ft•lbf (32.7-39.9N•m)	36.5-44.5ft•lbf (49.5-60.3N•m)	45.6-55.6ft•lbf (61.8-75.4N•m)	10.4-12.7ft•lbf (14.2-17.2N•m)

⚠ CAUTION

- **Overtightening may damage the flare and cause leaks.**

3) After the work is finished, make sure to check that there is no gas leak.

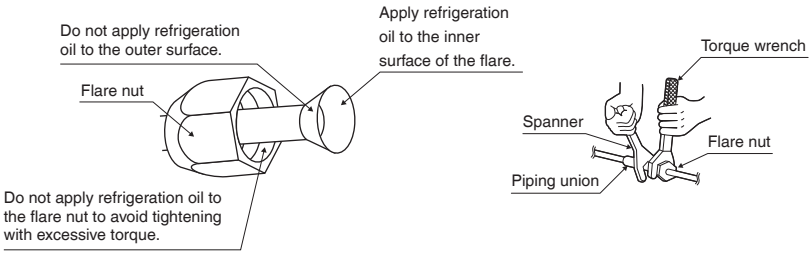

4) After checking for gas leaks, be sure to insulate the pipe connections.
- Insulate using the insulation for fitting included with the liquid and gas pipes. Besides, make sure the insulation for fitting on the liquid and gas piping has its seams facing up.
  (Tighten both edges with clamp.)
- For the gas piping, wrap the medium sealing pad over the insulation for fitting (flare nut part).

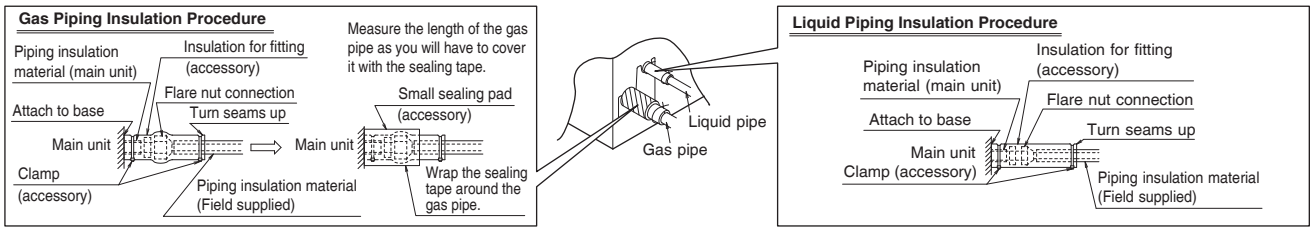

Refrigerant Piping Work

⚠ CAUTION

Be sure to insulate any field piping all the way to the piping connection inside the unit. Any exposed piping may cause condensation or burns if touched.

Cautions on Pipe Handling

- Protect the open end of the pipe against dust and moisture. (Tighten both edges with clamp.)
- All pipe bends should be as gentle as possible. Use a pipe bender for bending. (See the minimum bend radius in the table below.)

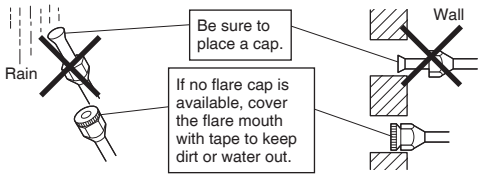

Selection of Copper and Heat Insulation materials

When using commercial copper pipes and fittings, observe the following:

- Insulation material: Polyethylene foam
  Heat transfer rate: 0.041 to 0.052W/mK (0.024 to 0.030Btu/fth°F (0.035 to 0.045kcal/mh°C))
  Be sure to use insulation that is designed for use with HVAC Systems.
- Be sure to insulate both the gas and liquid piping and to provide insulation dimensions as below.

Gas side			Liquid side	Gas pipe thermal insulation			Liquid pipe thermal insulation
O.D. 3/8 inch (9.5mm)	O.D. 1/2 inch (12.7mm)	O.D. 5/8 inch (15.9mm)	O.D. 1/4 inch (6.4mm)	I.D. 15/32-19/32 inch (12-15mm)	I.D. 9/16-5/8 inch (14-16mm)	I.D. 5/8-25/32 inch (16-20mm)	I.D. 5/16-13/32 inch (8-10mm)
Minimum bend radius				Thickness 13/32 inch (10mm) Min.			
1-3/16 inch (30mm) or more	1-9/16 inch (40mm) or more	1-15/16 inch (50mm) or more	1-3/16 inch (30mm) or more				
Thickness 0.031 inch (0.8mm) (C1220T-O)		Thickness 0.039 inch (1.0mm) (C1220T-O)	Thickness 0.031 inch (0.8mm) (C1220T-O)				

Also, when subject to high humidity, heat insulation of the refrigerant piping (the unit piping and branch piping) must be further reinforced.
Reinforce the insulation when installing the unit near bathrooms, kitchens, and other similar locations.
Refer to the following:

- 86°F (30°C), more than 75% RH: 13/16 inch (20mm) Min. in thickness

If the insulation is not sufficient, condensation may form on the surface of the insulation.

- Use separate thermal insulation pipes for gas and liquid refrigerant pipes.

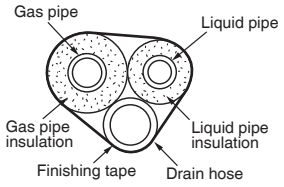

Drain Piping Work

⚠ CAUTION

Make sure all water is out before making the duct connection.

■ Install the drain piping.

- Make sure the drain works properly.
- The diameter of the drain pipe should be greater than or equal to the diameter of the connecting pipe (vinyl tube; pipe size: 25/32 inch (20mm); outer dimension: 1-1/32 inch (26mm)).

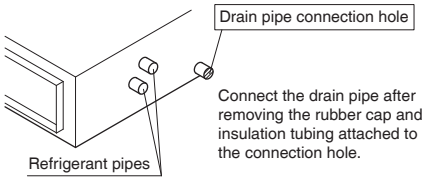

- Keep the drain pipe short and sloping downwards at a gradient of at least 1/100 to prevent air pockets from forming.

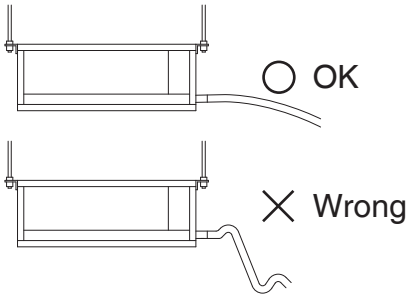

⚠ CAUTION

- **Water accumulating in the drain piping can cause the drain to clog.**

- To keep the drain tube from sagging, space hanging wires every 3 (1) to 5ft (1.5m).
- Use the drain hose and the metal clamp. Insert the drain hose fully into the drain socket and firmly tighten the metal clamp with the upper part of the tape on the hose end. Tighten the metal clamp until the screw head is less than 1/8 inch (4mm) from the hose.
- The two areas below should be insulated because condensation may form there causing water to leak.
  - Drain piping passing indoors
  - Drain sockets

  Referring the figure below, insulate the metal clamp and drain hose using the included large sealing pad.

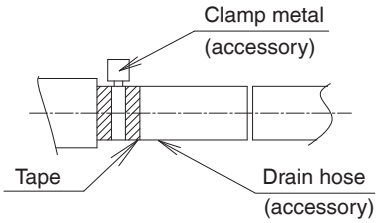

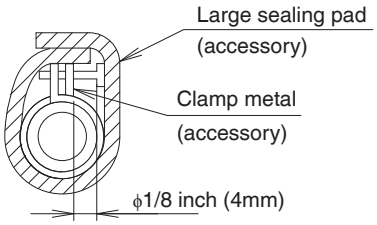

<PRECAUTIONS>

Drain piping connections

- Do not connect the drain piping directly to sewage pipes that smell of ammonia. The ammonia in the sewage might enter the indoor unit through the drain pipes and corrode the heat exchanger.
- Do not twist or bend the drain hose, so that excessive force is not applied to it.
  (This type of treatment may cause leaking.)

■ After piping work is finished, check drainage flows smoothly.

- Gradually insert approximately 1L of water into the drain pan to check drainage in the manner described below.
  - Gradually pour approximately 1L of water from the outlet hole into the drain pan to check drainage.
  - Check the drainage.

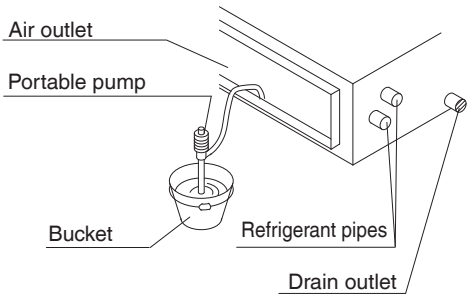

Installing the Duct

Connect the duct supplied in the field.

Air inlet side

- Attach the duct and intake-side flange (field supply).
- Connect the flange to the main unit with accessory screws (in 16, 20 or 24 positions).
- Wrap the intake-side flange and duct connection area with aluminum tape or something similar to prevent air escaping.

⚠ CAUTION

- When attaching a duct to the intake side, be sure also to attach an air filter inside the air passage on the intake side. (Use an air filter whose dust collecting efficiency is at least 50% in a gravimetric technique.)

Installing the Duct

Outlet side

- Connect the duct according to the inside of the outlet-side flange.
- Wrap the outlet-side flange and the duct connection area with aluminum tape or something similar to prevent air escaping.

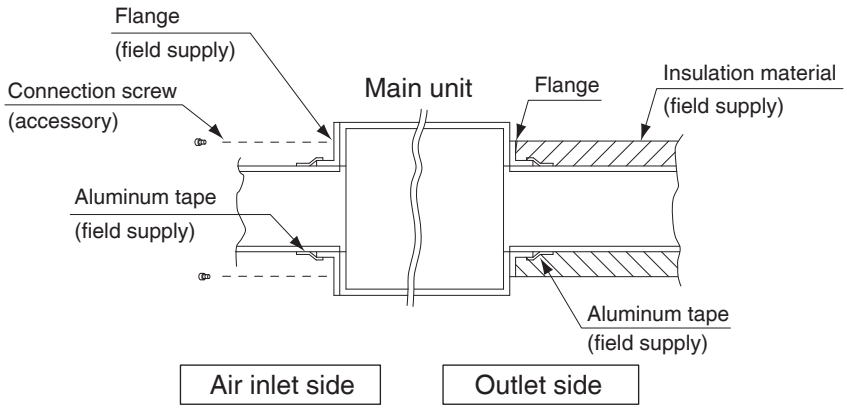

⚠ CAUTION

- Be sure to insulate the duct to prevent condensation from forming. (Material: glass wool or polyethylene foam, 1 inch (25mm) thick)
- Use electric insulation between the duct and the wall when using metal ducts to pass metal laths of the net or fence shape or metal plating into wooden buildings.

Wiring

See the installation manual supplied with the outdoor unit.

■ HOW TO CONNECT WIRINGS.

- Wire only after removing the control box cover as shown in the Fig.

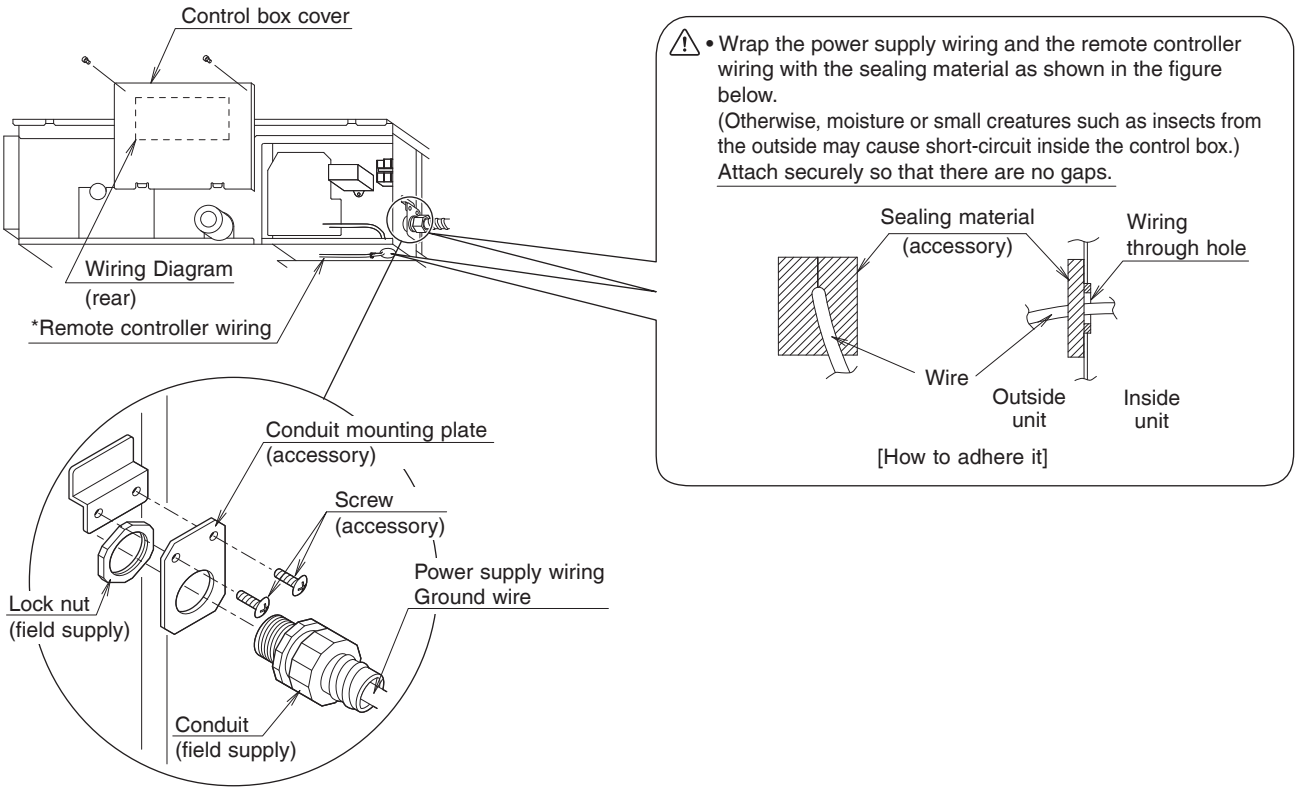

⚠ CAUTION

- When doing the wiring, make sure the wiring is neat and does not cause the control box cover to stick up, then close the cover firmly. When attaching the control box cover, make sure you do not pinch any wires.
- Outside the unit, separate the low voltage wiring (remote controller wiring) and high voltage wiring (ground wire and power supply wiring) at least 5in so that they do not pass through the same place together. Proximity may cause electrical interference, malfunctions, and breakage.

[PRECAUTION]

- See also the “Electrical Wiring Diagram Label” when wiring the unit for power supply.

[Connecting electrical wiring]

- **Power supply wiring and ground wire**
  Remove the control box cover.
  Next, pull the wires into the unit through the conduit and thread them through the insulation tube (accessory), then connect to the power wiring terminal block (4P).
  Secure the wires covered by the insulation tube with the clamp (accessory).
  Be sure to put the part of the sheathed vinyl into the control box.

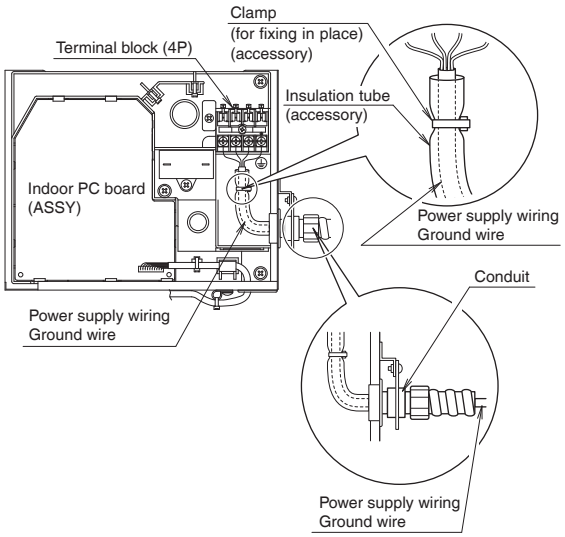

⚠ WARNING

- **Do not use tapped wires, stranded wires, extension cords, or starburst connections, as they may cause overheating, electrical shock, or fire.**

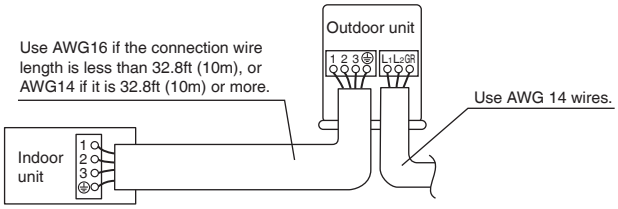

Trial Operation and Testing

1. Trial operation and testing

(1) Measure the supply voltage and make sure that it falls in the specified range.
(2) Trial operation should be carried out in either cooling or heating mode.

Trial operation from remote controller
(1) Press ON/OFF button to turn on the system. (2) Simultaneously press center of TEMP button and MODE button. (3) Press MODE button twice. (“ 7 ” will appear on the display to indicate that Trial Operation mode is selected.) (4) Trial operation mode terminates in approx. 30 minutes and switches into normal mode. To quit the trial operation, press ON/OFF button.

In cooling mode, select the lowest programmable temperature; in heating mode, select the highest programmable temperature.

- Trial operation may be disabled in either mode depending on the room temperature.
- After trial operation is complete, set the temperature to a normal level (79°F (26°C) to 82°F (28°C) in cooling mode, 68°F (20°C) to 75°F (24°C) in heating mode).
- For protection, the system disables restart operation for 3 minutes after it is turned off.

(3) Carry out the test operation in accordance with the Operation Manual to ensure that all functions and parts, are working properly.

* The air conditioner requires a small amount of power in its standby mode. If the system is not to be used for some time after installation, shut off the circuit breaker to eliminate unnecessary power consumption.

* If the circuit breaker trips to shut off the power to the air conditioner, the system will restore the original operation mode when the circuit breaker is turned on again.

2. Test items

Test items	Symptom (diagnostic display on RC)	Check
Indoor and outdoor units are installed properly on solid bases.	Fall, vibration, noise	
No refrigerant gas leaks.	Incomplete cooling/heating function	
Refrigerant gas and liquid pipes and indoor drain hose extension are thermally insulated.	Water leakage	
Drain pipe is properly installed.	Water leakage	
System is properly grounded.	Electrical leakage	
The specified wires are used for interconnecting wire connections.	Inoperative or burn damage	
Indoor or outdoor unit’s air inlet or discharge has clear path of air. Shut-off valves are opened.	Incomplete cooling/heating function	
Indoor unit properly receives remote controller commands.	Inoperative	

DAIKIN NORTH AMERICA LLC
19001 Kermier Road
Houston, TX 77484
http://www.northamerica-daikin.com/

The two-dimensional bar code is a manufacturing code.

3P297301-4E M17B031 (1706) HT