DAIKIN

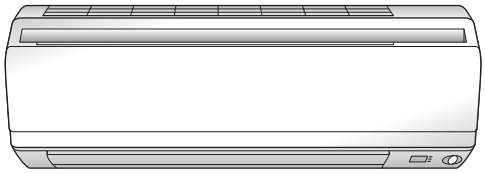

DAIKIN ROOM AIR CONDITIONER

INSTALLATION MANUAL

R410A Split Series

INVERTER

Installation manual

Manuel d'installation

Manual de instalación

English

Français

Español

MODELS

FTXS09LVJU

FTXS12LVJU

CTXS07LVJU

Safety Precautions

- Read these Safety Precautions carefully to ensure correct installation.
- This manual classifies the precautions into DANGER, WARNING and CAUTION. Be sure to follow all the precautions below: they are all important for ensuring safety.

⚠ **DANGER .....Indicates an imminently hazardous situation which, if not avoided, will result in death or serious injury.**

⚠ **WARNING .....Failure to follow any of WARNING is likely to result in such grave consequences as death or serious injury.**

⚠ **CAUTION .....Failure to follow any of CAUTION may in some cases result in grave consequences.**

- The following safety symbols are used throughout this manual:

Be sure to observe this instruction.	Be sure to establish a ground connection.	Never attempt.

- After completing installation, test the unit to check for installation errors. Give the user adequate instructions concerning the use and cleaning of the unit according to the Operation Manual.

⚠ DANGER
• Refrigerant gas is heavier than air and replaces oxygen. A massive leak could lead to oxygen depletion, especially in basements, and an asphyxiation hazard could occur leading to serious injury or death.
• If the refrigerant gas leaks during installation, ventilate the area immediately. Refrigerant gas may produce a toxic gas if it comes in contact with fire such as from a fan heater, stove or cooking device. Exposure to this gas could cause severe injury or death.
• After completing the installation work, check that the refrigerant gas does not leak. Refrigerant gas may produce a toxic gas if it comes in contact with fire such as from a fan heater, stove or cooking device. Exposure to this gas could cause severe injury or death.
• Do not ground units to water pipes, telephone wires or lightning rods because incomplete grounding could cause a severe shock hazard resulting in severe injury or death, and to gas pipes because a gas leak could result in an explosion which could lead to severe injury or death.
• Safely dispose of the packing materials. Packing materials, such as nails and other metal or wooden parts, may cause stabs or other injuries. Tear apart and throw away plastic packaging bags so that children will not play with them. Children playing with plastic bags face the danger of death by suffocation.
• Do not install unit in an area where flammable materials are present due to risk of explosion resulting in serious injury or death.
• Do not ground units to telephone wires or lightning rods because lightning strikes could cause a severe shock hazard resulting in severe injury or death, and to gas pipes because a gas leak could result in an explosion which could lead to severe injury or death.

⚠ WARNING
• Installation shall be left to the authorized dealer or another trained professional. Improper installation may cause water leakage, electrical shock, fire, or equipment damage.
• Install the air conditioner according to the instructions given in this manual. Incomplete installation may cause water leakage, electrical shock, fire or equipment damage.
• Be sure to use the supplied or exact specified installation parts. Use of other parts may cause the unit to come to fall, water leakage, electrical shock, fire or equipment damage.
• Install the air conditioner on a solid base that is level and can support the weight of the unit. An inadequate base or incomplete installation may cause injury or equipment damage in the event the unit falls off the base or comes loose.
• Electrical work shall be carried out in accordance with the installation manual and the national, state and local electrical wiring codes. Insufficient capacity or incomplete electrical work may cause electrical shock, fire or equipment damage.
• Be sure to use a dedicated power circuit. Never use a power supply shared by another appliance. Follow all appropriate electrical codes.
• For wiring, use a wire or cable long enough to cover the entire distance with no splices if possible. Do not use an extension cord. Do not put other loads on the power supply. Use an only a separate dedicated power circuit. (Failure to do so may cause abnormal heat, electric shock, fire or equipment damage.)
• Use the specified types of wires for electrical connections between the indoor and outdoor units. Follow all state and local electrical codes. Firmly clamp the inter-unit wire so their terminals receive no external stresses. Incomplete connections or clamping may cause terminal overheating, fire or equipment damage.
• After connecting all wires be sure to shape the cables so that they do not put undue stress on the electrical covers, panels or terminals. Install covers over the wires. Incomplete cover installation may cause terminal overheating, electrical shock,fire or equipment damage.
• When installing or relocating the system, be sure to keep the refrigerant circuit free from all substances other than the specified refrigerant (R410A), such as air. (Any presence of air or other foreign substance in the refrigerant circuit causes an abnormal pressure rise which may result in rupture, resulting in injury.)

Safety Precautions

⚠ WARNING
• During pump-down, stop the compressor before removing the refrigerant piping. If the compressor is still running and the stop valve is open during pump-down, air will be sucked in when the refrigerant piping is removed, causing abnormally high pressure which could lead to equipment damage or and personal injury.
• During installation, attach the refrigerant piping securely before running the compressor. If the refrigerant pipes are not attached and the stop valve is open during pump-down, air will be sucked in when the compressor is run, causing abnormally high pressure which could lead to equipment damage and personal injury.
• Be sure to install a ground fault circuit interrupter breaker. Failure to install a ground fault circuit interrupter breaker may result in electrically shocks, or fire personal injury.

⚠ CAUTION	
• Do not install the air conditioner where gas leakage would be exposed to open flames. If the gas leaks and builds up around the unit, it may catch fire.	⃠
• Establish drain piping according to the instructions of this manual. Inadequate piping may cause water damage.	
• Tighten the flare nut according to the specified torque. A torque wrench should be used. If the flare nut is tightened too much, the flare nut may crack over time and cause refrigerant leakage.	
• Do not touch the heat exchanger fins. Improper handling may result in injury.	⃠
• Be very careful about product transportation. Some products use PP bands for packaging. Do not use any PP bands for a means of transportation. It is dangerous.	
• Electrical work must be performed in accordance with the NEC/CEC by authorized personnel only.	

Accessories

Indoor unit Ⓐ – Ⓛ,

Ⓐ	Mounting plate	1	Ⓔ	Remote controller holder	1	Ⓙ	Tube	1
Ⓑ	Mounting plate fixing screw 3/16” × 1” (M4 × 25mm)	5	Ⓕ	Fixing screw for remote controller holder 1/8” × 13/16” (M3 × 20mm)	2	Ⓚ	Operation manual	1
Ⓒ	Titanium apatite photocatalytic air-purifying filter	2	Ⓖ	Dry battery AAA. LR03 (alkaline)	2	Ⓛ	Installation manual	1
Ⓓ	Wireless remote controller	1	Ⓗ	Indoor unit fixing screw 3/16” × 1/2” (M4 × 12mm)	2			

Choosing an Installation Site

• Before choosing the installation site, obtain user approval.

1. Indoor unit

• The indoor unit should be sited in a place where:
1) the restrictions on installation specified in the indoor unit installation drawings are met,
2) both air inlet and air outlet have clear paths met,
3) the unit is not in the path of direct sunlight,
4) the unit is away from the source of heat or steam,
5) there is no source of machine oil vapour (this may shorten indoor unit life),
6) cool (warm) air is circulated throughout the room,
7) the unit is away from electronic ignition type fluorescent lamps (inverter or rapid start type) as they may shorten the remote controller range,
8) the unit is at least 3.5ft (1m) away from any television or radio set (unit may cause interference with the picture or sound),
9) install at the recommended height 6ft (1.8m),
10) no laundry equipment is located in the space.

2. Wireless remote controller

1) Turn on all the fluorescent lamps in the room, if any, and find the site where remote control signals are properly received by the indoor unit (within 23ft/7m).

Indoor Unit Installation Drawings

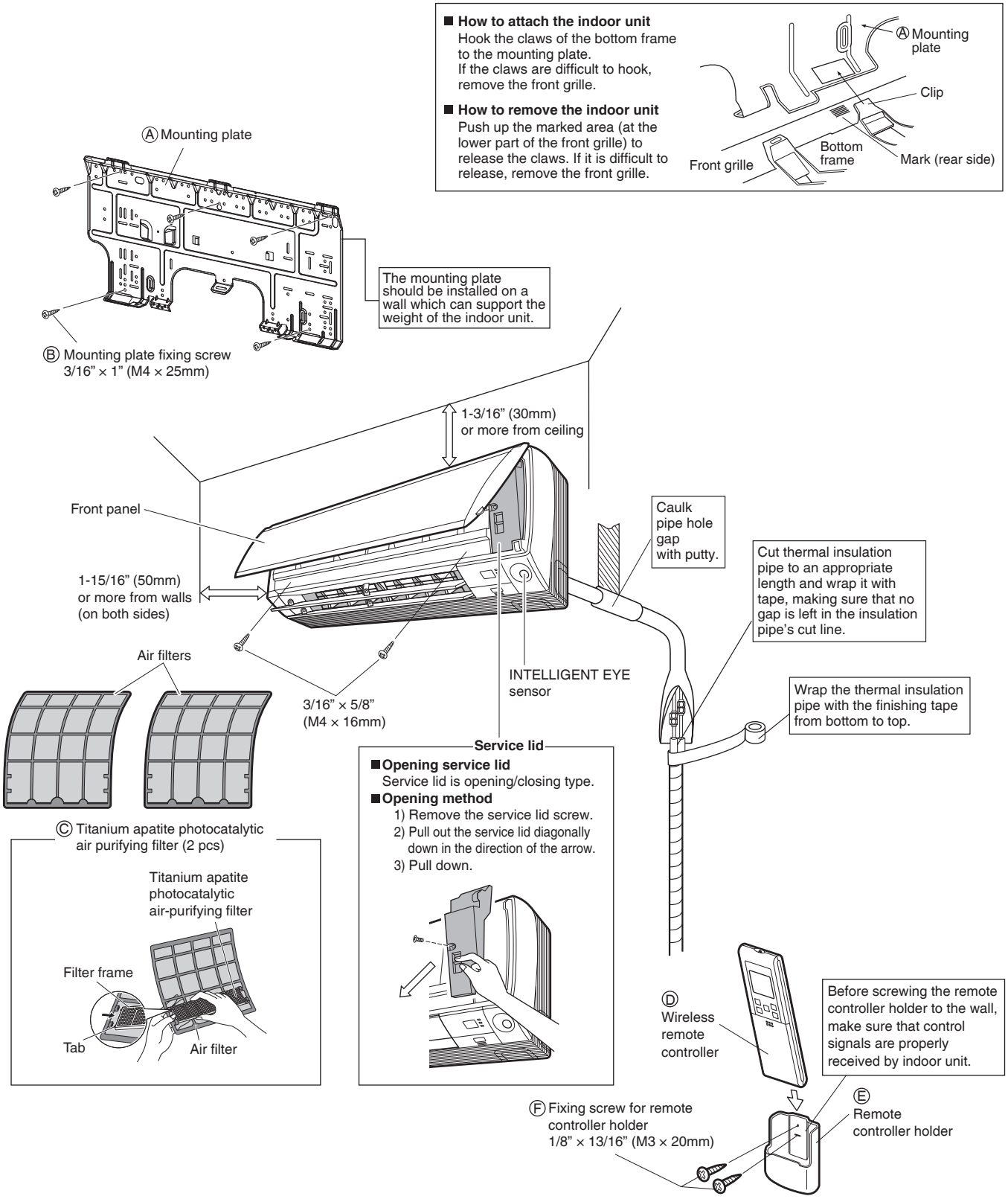

INTELLIGENT EYE sensor

⚠ CAUTION

- Do not hit or forcefully push the INTELLIGENT EYE sensor. This can lead to damage and malfunction.
- Do not place large objects near the sensor. Also keep heating units or humidifiers outside the sensor's detection area.

Preparation before Installation

1. Removing and installing front panel

• **Removal method**

Hook fingers on the tabs on the left and right of the main body, and open until the panel stops. Slide the front panel sideways to disengage the rotating shaft. Then pull the front panel toward you to remove it.

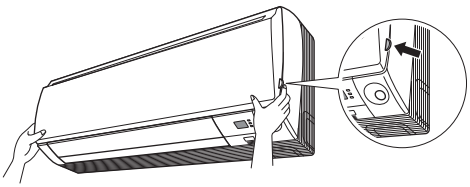

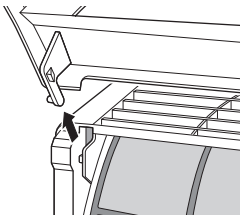

• **Installation method**

Align the tabs of the front panel with the grooves, and push all the way in. Then close slowly. Push the center of the lower surface of the panel firmly to engage the tabs.

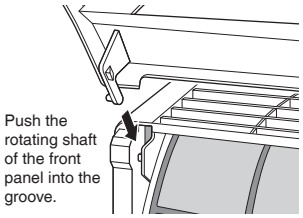

2. Removing and installing front grille

• **Removal method**

1) Remove front panel to remove the air filter.
2) Remove 2 screws from the front grille.
3) In front of the ○○○ mark of the front grille, there are 3 upper hooks. Lightly pull the front grille toward you with one hand, and push down on the hooks with the fingers of your other hand.

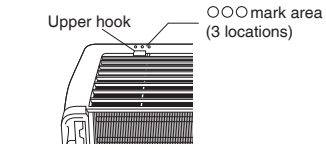

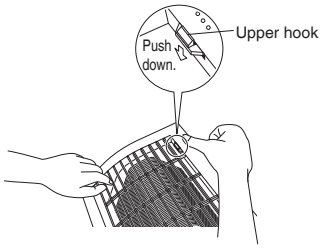

When there is no work space because the unit is close to ceiling

⚠ CAUTION

• Be sure to wear protection gloves.

Place both hands under the center of the front grille, and while pushing up, pull it toward you.

• **Installation method**

1) Install the front grille and firmly engage the upper hooks (3 locations).
2) Install 2 screws of the front grille.
3) Install the air filter and then mount the front panel.

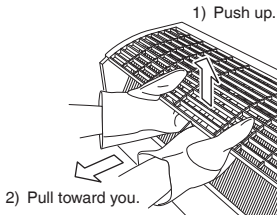

3. How to set the different addresses

When 2 indoor units are installed in one room, the 2 wireless remote controllers can be set for different addresses.

1) Remove the metal plate electrical wiring cover.
   (Refer to the **When connecting to an HA system**.)
2) Cut the address jumper (JA) on the printed circuit board.
3) Cut the address jumper (J4) in the remote controller.

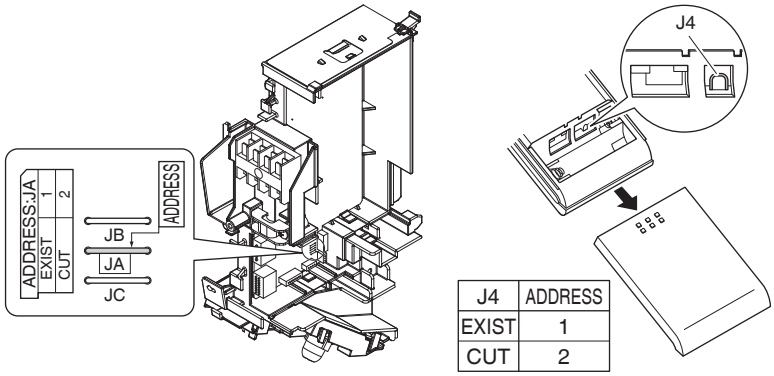

J4	ADDRESS
EXIST	1
CUT	2

4. When connecting to an HA system (wired remote controller, central remote controller etc.)

1) Remove the metal plate electrical wiring cover.
   (Refer to the **Removal/attachment methods of metal plate electrical wiring covers**.)
2) Attach the connection cord to the S21 connector and pull the harness out through the notched part in the figure.
3) Replace the electrical wiring cover as it was, and pull the harness around, as shown in the figure.

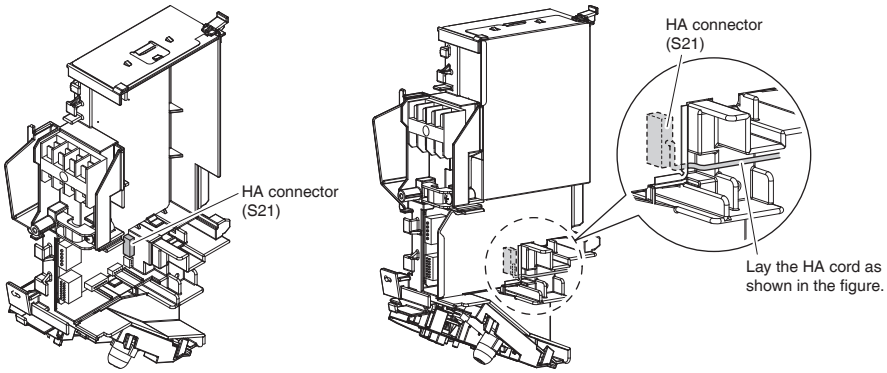

- **Removal methods of metal plate electrical wiring cover**
  1) Remove the front grille.
  2) Remove the electrical wiring box. (1 screw)
  3) Raise the 2 upper parts of the metal plate electrical wiring cover, pull the parts frontward, and remove the 3 tabs.
  4) Slide the metal plate electrical wiring cover upward and remove the 2 tabs on the lower side.

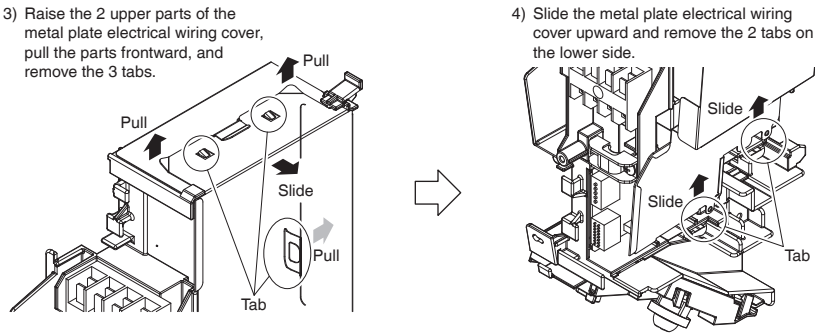

Preparation before Installation

- **Attachment methods of metal plate electrical wiring cover**

  Attach the metal plate electrical wiring cover as shown below.

  1) Lean the metal plate electrical wiring cover as shown in the figure and attach tab (1) on the lower side to the electrical wiring box.
  2) Attach tab (2) on the lower side of the metal plate electrical wiring cover.

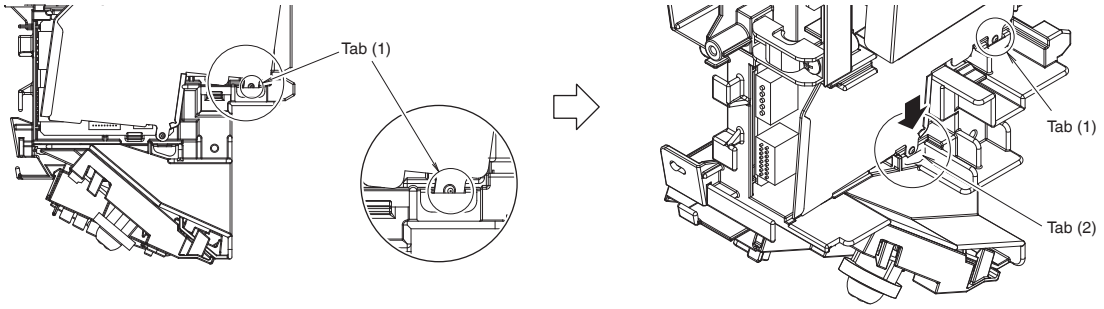

3) Push in the upper part of the metal plate electrical wiring cover and attach the 3 tabs.

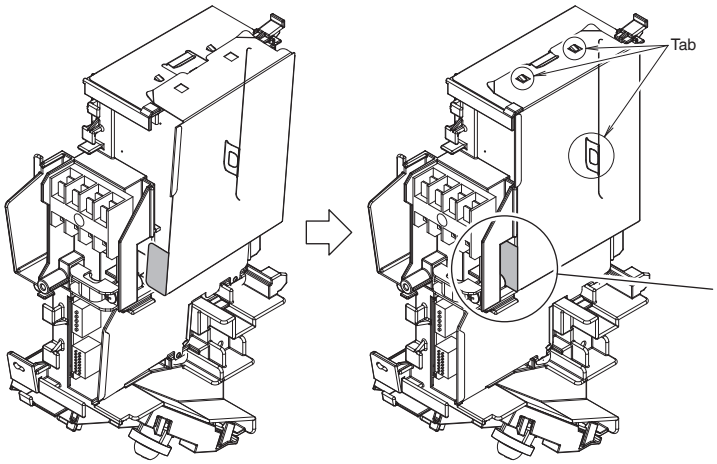

⚠ CAUTION

- Make sure that the shaded part ( ) will not go inside the electrical wiring box.

Refrigerant Piping Work

With a multi indoor unit, install as described in the installation manual supplied with the Multi outdoor unit.

1. Flaring the pipe end

1) Cut the pipe end with a pipe cutter.
2) Remove burrs with the cut surface facing downward so that the chips do not enter the pipe.
3) Put the flare nut on the pipe.
4) Flare the pipe.
5) Check that the flaring is properly made.

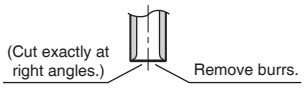

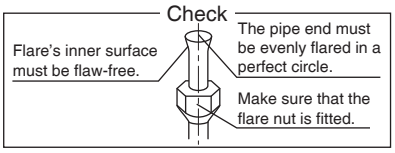

Flaring

Set exactly at the position shown below.

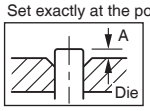

	Flare tool for R410A	Conventional flare tool	
	Clutch-type	Clutch-type (Rigid-type)	Wing-nut type (Imperial-type)
A	0-0.020 inch (0-0.5mm)	0.039-0.059 inch (1.0-1.5mm)	0.059-0.079 inch (1.5-2.0mm)

⚠ WARNING

- Do not use mineral oil on flared part.
- Prevent mineral oil from getting into the system as this would reduce the lifetime of the units.
- Never use piping which has been used for previous installations. Only use parts which are delivered with the unit.
- Never install a drier to this R410A unit in order to guarantee its lifetime.
- The drying material may dissolve and damage the system.
- Incomplete flaring may cause refrigerant gas leakage.

2. Refrigerant piping

⚠ CAUTION

- Use the flare nut fixed to the main unit to prevent it from cracking and deteriorating from age.
- To prevent gas leakage, apply refrigeration oil only to the inner surface of the flare. (Use refrigeration oil for R410A.)
- Use torque wrenches when tightening the flare nuts to prevent damage to the flare nuts and gas leakage.

Align the centers of both flares and tighten the flare nuts 3 or 4 turns by hand. Then tighten them fully with the torque wrenches.

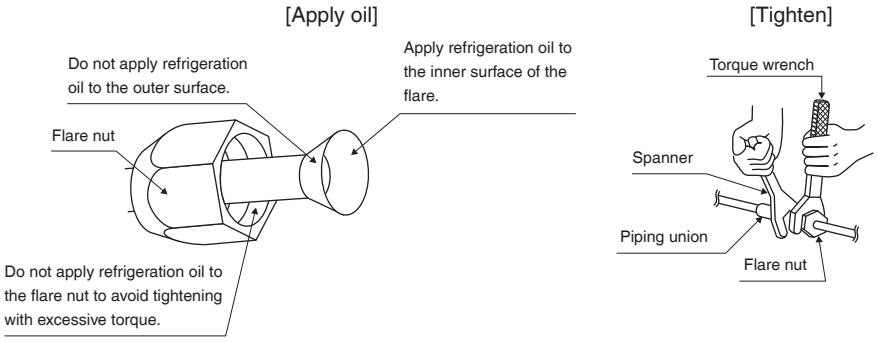

Flare nut tightening torque	
Gas side	Liquid side
3/8 inch (9.5mm)	1/4 inch (6.4mm)
24.1-29.4ft • lbf (32.7-39.9N • m)	10.4-12.7ft • lbf (14.2-17.2N • m)

2-1. Caution on piping handling

1) Protect the open end of the pipe against dust and moisture.
2) All pipe bends should be as gentle as possible. Use a pipe bender for bending.

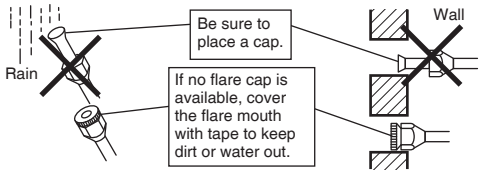

2-2. Selection of copper and heat insulation materials

- When using commercial copper pipes and fittings, observe the following:

1) Insulation material: Polyethylene foam
   Heat transfer rate: 0.041 to 0.052W/mK (0.024 to 0.030Btu/fth°F (0.035 to 0.045kcal/mh°C))
   Be sure to use insulation that is designed for use with HVAC Systems.

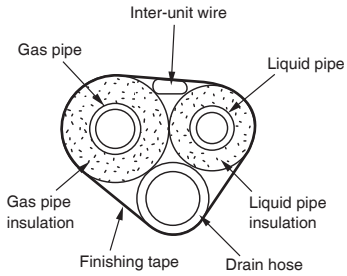

2) Be sure to insulate both the gas and liquid piping and to provide insulation dimensions as below.

Gas side	Liquid side	Gas pipe thermal insulation	Liquid pipe thermal insulation
O.D. 3/8 inch (9.5mm)	O.D. 1/4 inch (6.4mm)	I.D. 15/32-19/32 inch (12-15mm)	I.D. 5/16-13/32 inch (8-10mm)
Minimum bend radius		Thickness 13/32 inch (10mm) Min.	
1-3/16 inch (30mm) or more			
Thickness 0.031 inch (0.8mm) (C1220T-O)			

3) Use separate thermal insulation pipes for gas and liquid refrigerant pipes.

Indoor Unit Installation

1. Installing the mounting plate

- The mounting plate should be installed on a wall which can support the weight of the indoor unit.
  1) Temporarily secure the mounting plate to the wall, make sure that the plate is completely level, and mark the boring points on the wall.
  2) Secure the mounting plate to the wall with screws.

Recommended mounting plate retention spots and dimensions

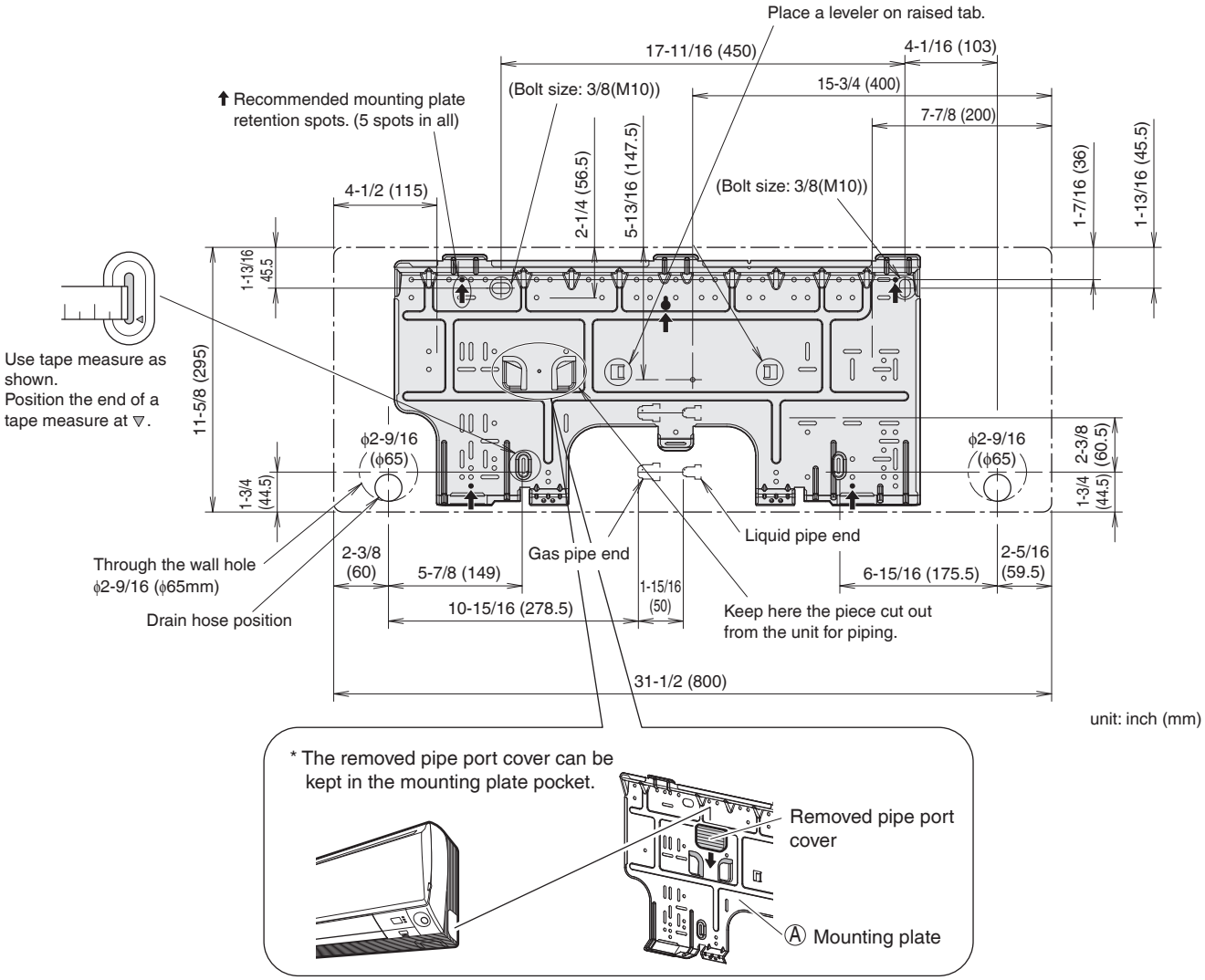

2. Boring a wall hole and installing wall embedded pipe

- For walls containing metal frame or metal board, be sure to use a wall embedded pipe and wall cover in the feed-through hole to prevent possible heat, electrical shock, or fire.
- Be sure to caulk the gaps around the pipes with caulking material to prevent water leakage.
  1) Bore a feed-through hole of 2-9/16 inch (65mm) in the wall so it has a down slope toward the outside.
  2) Insert a wall pipe into the hole.
  3) Insert a wall cover into wall pipe.
  4) After completing refrigerant piping, wiring, and drain piping, caulk pipe hole gap with putty.

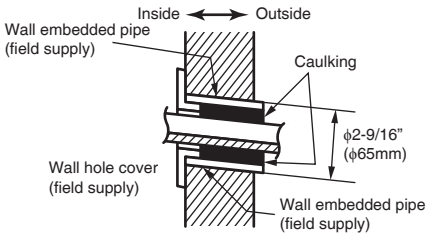

3. Laying piping, hoses, and wiring

3-1. Right-side, right-back, or right-bottom piping

1) Attach the drain hose to the underside of the refrigerant pipes with an adhesive vinyl tape.
2) Wrap the refrigerant pipes and drain hose together with insulation tape.

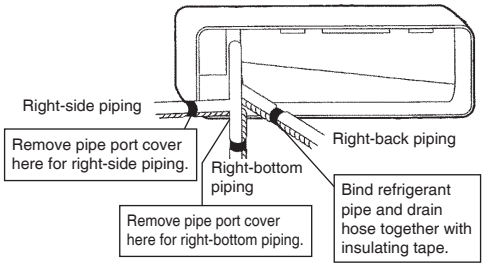

3) Pass the drain hose and refrigerant pipes through the wall hole, then set the indoor unit on the mounting plate hooks by using the △ markings at the top of the indoor unit as a guide.

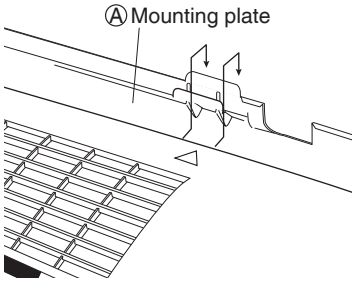

3-2. Left-side, left-back, or left-bottom piping

1) Replace the drain plug and drain hose.
2) Attach the drain hose to the underside of the refrigerant pipes with adhesive vinyl tape.

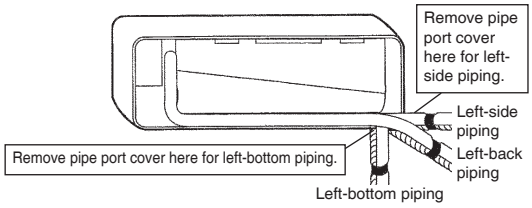

3) Be sure to connect the drain hose to the drain port in place of a drain plug.

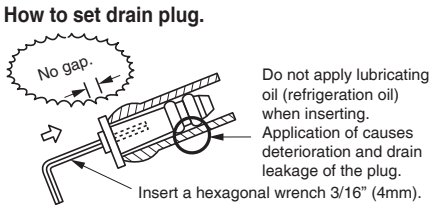

4) Shape the refrigerant pipes along the pipe path marking on the mounting plate.
5) Pass drain hose and refrigerant pipes through the wall hole, then set the indoor unit on mounting plate hooks, using the △ markings at the top of indoor unit as a guide.
6) Pull in the inter-unit wire.
7) Connect the inter-unit pipes.

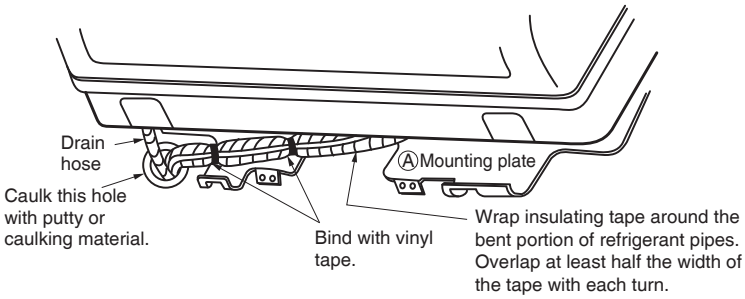

8) Wrap the refrigerant pipes and drain hose together with insulation tape as right figure, in case of setting the drain hose through the back of the indoor unit.
9) While exercising care so that the inter-unit wire do not catch indoor unit, press the bottom edge of indoor unit with both hands until it is firmly caught by the mounting plate hooks. Secure indoor unit to the mounting plate with indoor unit fixing screws 3/16 × 1/2 inch (M4 × 12mm).

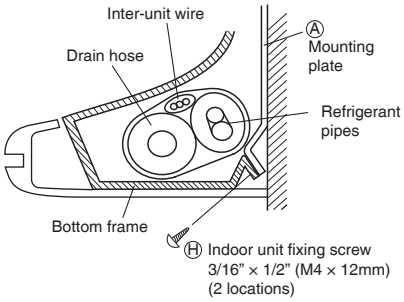

Indoor Unit Installation

3-3. Wall embedded piping

- Insert the drain hose to this depth so it won't be pulled out of the drain pipe.

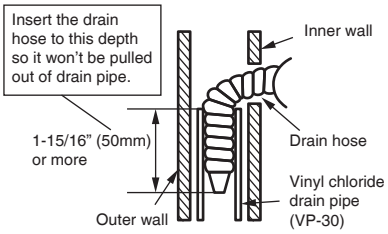

4. Wiring

With a multi indoor unit, install as described in the installation manual supplied with the Multi outdoor unit.

1) As shown in the illustration on the right-hand side, insert the wires including the ground wire into the conduit and secure them with lock nut onto the conduit mounting plate.
2) Insert the wires including the ground wire into Ⓙ tube.
   - Cut Ⓙ tube when Ⓙ tube is too long.
3) Strip wire ends (9/16 inch (15mm)).
4) Match wire colors with terminal numbers on indoor and outdoor unit's terminal blocks and firmly screw wires to the corresponding terminals.
5) Connect the ground wires to the corresponding terminals.
6) Pull the wires and check that the wires are securely fixed to the terminal block.
7) In case of connecting to an adapter system, run the remote controller cable and attach the S21. (Refer to P5 when connecting to an HA system.)
8) Shape the wires so that the service lid fits securely, then close service lid.

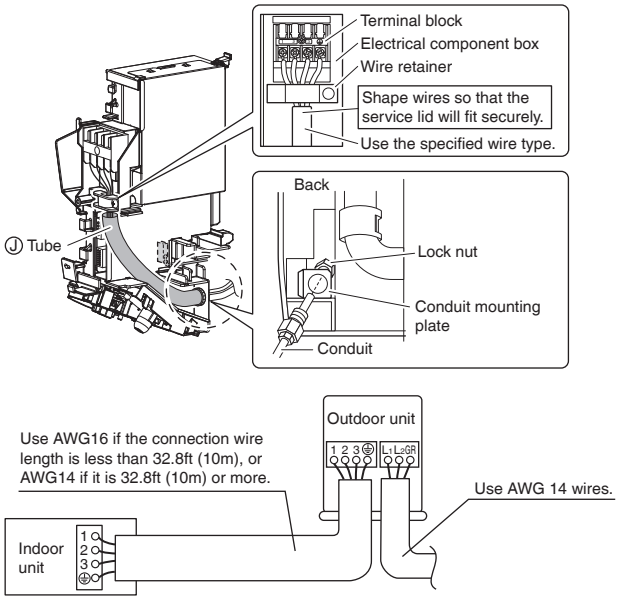

⚠ WARNING

- Do not use tapped wires, stranded wires, extension cords, or starburst connections, as they may cause overheating, electrical shock, or fire.
- Do not use locally purchased electrical parts inside the product. (Do not branch the power for the drain pump, etc., from the terminal block.) Doing so may cause electric shock or fire.
- When carrying out wiring connection, take care not to pull at the conduit.
- Do not connect the power wire to the indoor unit. Doing so may cause electric shock or fire.

5. Drain piping

1) Connect the drain hose, as described right.

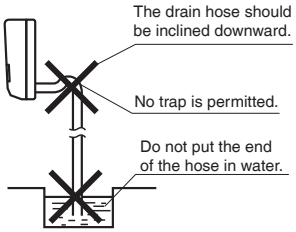

2) Remove the air filters and pour some water into the drain pan to check the water flows smoothly.

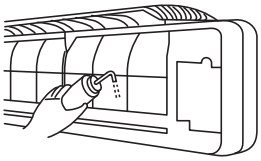

3) When drain hose requires extension, obtain an extension hose commercially available.
Be sure to thermally insulate the indoor section of the extension hose.

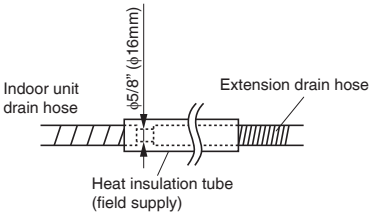

4) When connecting a rigid polyvinyl chloride pipe (nominal diameter 1/2 inch (13mm)) directly to the drain hose attached to the indoor unit as with embedded piping work, use any commercially available drain socket (nominal diameter 1/2 inch (13mm)) as a joint.

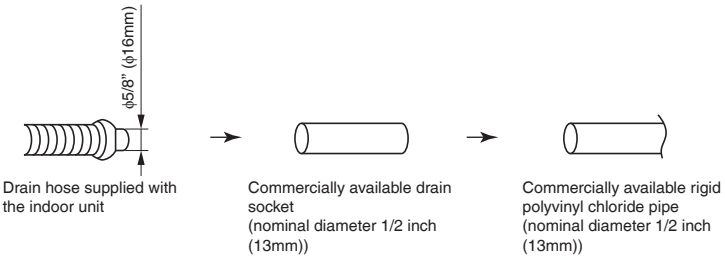

Trial Operation and Testing

1. Trial operation and testing

1-1 Measure the supply voltage and make sure that it falls in the specified range.

1-2 Trial operation should be carried out in either cooling or heating mode.

- In cooling mode, select the lowest programmable temperature; in heating mode, select the highest programmable temperature.
  1) Trial operation may be disabled in either mode depending on the room temperature.
     Use the remote controller for trial operation as described below.
  2) After trial operation is complete, set the temperature to a normal level (78°F to 82°F (26°C to 28°C) in cooling mode, 68°F to 75°F (20°C to 24°C) in heating mode).
  3) For protection, the system disables restart operation for 3 minutes after it is turned off.

1-3 Carry out the test operation in accordance with the operation manual to ensure that all functions and parts, such as fin movement, are working properly.
- The air conditioner requires a small amount of power in its standby mode. If the system is not to be used for some time after installation, shut off the circuit breaker to eliminate unnecessary power consumption.
- If the circuit breaker trips to shut off the power to the air conditioner, the system will restore the original operation mode when the circuit breaker is opened again.

Trial operation from remote controller

1) Press “ON/OFF” button to turn on the system.
2) Press “TEMP” button (2 locations) and “MODE” button at the same time.
3) Press “MODE” button twice.
   (“ TT ” will appear on the display to indicate that trial operation mode is selected.)
4) Trial operation terminates in approx. 30 minutes and switches into normal mode. To quit a trial operation, press “ON/OFF” button.

2. Test items

Test items	Symptom (diagnostic display on RC)	Check
Indoor and outdoor units are installed properly on solid bases.	Fall, vibration, noise	
No refrigerant gas leaks.	Incomplete cooling/heating function	
Refrigerant gas and liquid pipes and indoor drain hose extension are thermally insulated.	Water leakage	
Draining line is properly installed.	Water leakage	
System is properly grounded.	Electrical leakage	
The specified wires are used for inter-unit wiring.	Inoperative or burn damage	
Indoor or outdoor unit’s air inlet or air outlet has clear path of air. Stop valves are opened.	Incomplete cooling/heating function	
Indoor unit properly receives remote control commands.	Inoperative	
The heat pump or cooling only mode is selectable with the DIP switch of the remote controller.	Remote controller malfunctioning	

DAIKIN AC (AMERICAS), INC.
1645 Wallace Drive, Suite 110
Carrollton, TX75006

info@daikinac.com
www.daikinac.com

DAIKIN INDUSTRIES, LTD.
Head office:
Umeda Center Bldg., 2-4-12, Nakazaki-Nishi,
Kita-ku, Osaka, 530-8323 Japan

Tokyo office:
JR Shinagawa East Bldg., 2-18-1, Konan,
Minato-ku, Tokyo, 108-0075 Japan

Two-dimensional bar code is a code for manufacturing.

3P297301-1 M11B119 (1111) HT