MIDDLE STATIC PRESSURE DUCT TYPE AIR CONDITIONER

Installation Manual

Middle Static Pressure Duct Type

MST123E20ADAA
MST183E20ADAA

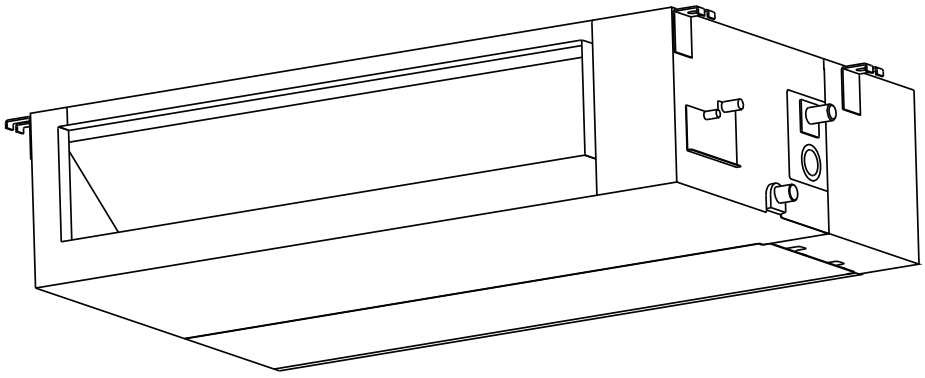

IMPORTANT NOTE:
Read this manual carefully before installing or operating your new air conditioning unit. Make sure to save this manual for future reference.

Table of Contents

Installation Manual

1 Accessories 04

2 Safety Precautions 05

3 Installation Overview 06

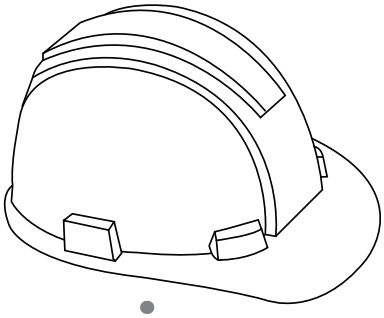

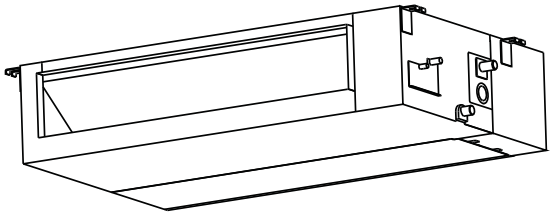

4 Indoor Unit Installation 07

a. Indoor Unit Parts 07
b. Indoor Unit Installation Instructions 08

5 Outdoor Unit Installation 18

a. Outdoor Unit Installation Instructions 18
b. Outdoor Unit Types and Specifications 19
c. Notes on Drilling Hole in Wall 20

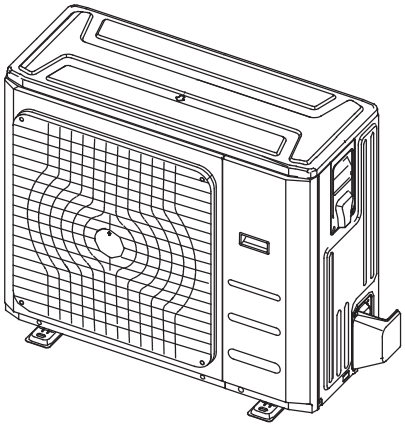

6 Drainpipe Installation 21

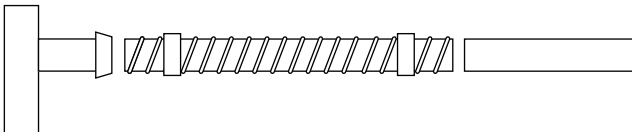

7 Refrigerant Piping Connection 23

A. Notes on Pipe Length and Elevation 23
B. Refrigerant Piping Connection Instructions .. 24

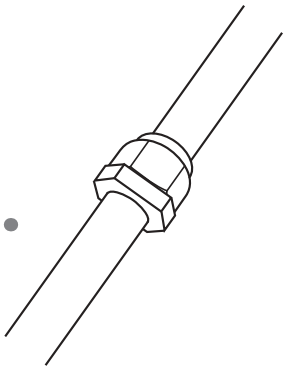

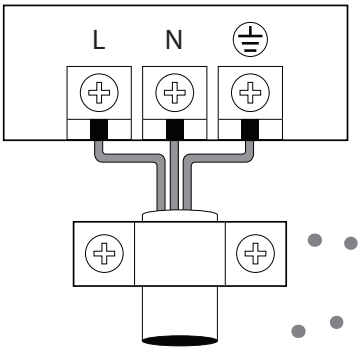

8 Wiring 26

a. Outdoor Unit Wiring 27
b. Indoor Unit Wiring 27
c. Power Specifications 28

9 Air Evacuation 30

a. Evacuation Instructions 30
b. Note on Adding Refrigerant 31

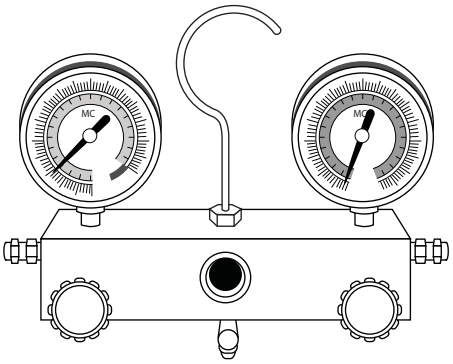

10 Test Run 32

Accessories

1

The air conditioning system comes with the following accessories. Use all of the installation parts and accessories to install the air conditioner. Improper installation may result in water leakage, electrical shock and fire, or equipment failure.

	NAME	SHAPE	QUANTITY
Tubing & Fittings	Soundproof / insulation sheath		2
	Binding tape		1
	Seal sponge (some models)		1
	Orifice (some models)		1
Drainpipe Fittings (for cooling & heating)	Drain joint (some models)		1
	Seal ring (some models)		1
Others	Owner's manual		1
	Installation manual		1
	Transfer connector(Φ12.7-Φ15.9)/ (Φ0.5in-Φ0.63in)(Packed with the indoor unit) NOTE: Pipe size may differ from appliance to appliance. To meet different pipe size requirements, sometimes the pipe connections need a transfer connector installed on the outdoor unit .		1 (on some models)
	Transfer connector(Φ6.35-Φ9.52)/ (Φ0.25in-Φ0.375in)(Packed with the indoor unit) NOTE: Pipe size may differ from appliance to appliance. To meet different pipe size requirements, sometimes the pipe connections need a transfer connector installed on the outdoor unit .		1 (on some models)
	Transfer connector(Φ9.52-Φ12.7)/ (Φ0.375in-Φ0.5in) (Packed with the indoor unit,used for multi-type models only) NOTE: Pipe size may differ from appliance to appliance. To meet different pipe size requirements, sometimes the pipe connections need a transfer connector installed on the outdoor unit .		1 (on some models)
	Connecting wire for display (2m)		1(on some models)
	Cord protection rubber ring		1(on some models)
EMC Magnetic Ring (some models)	Magnetic ring (wrap the electric wires S1 & S2 (P & Q & E) around the magnetic ring twice)	S1&S2(P&Q&E)	1
	Magnetic ring (Hitch it on the connective cable between indoor unit and outdoor unit after installation.)		1

Optional accessories

- There are two types of remote controls: wired and wireless.
  Select a remote controller based on customer preferences and requirements and install in an appropriate place.
  Refer to catalogues and technical literature for guidance on selecting a suitable remote controller.

Safety Precautions

2

Read Safety Precautions Before Installation

Incorrect installation due to ignoring instructions can cause serious damage or injury.
The seriousness of potential damage or injuries is classified as either a **WARNING** or **CAUTION.**

WARNING

Failure to observe a warning may result in death. The appliance must be installed in accordance with national regulations.

CAUTION

Failure to observe a caution may result in injury or equipment damage.

WARNING

- **Carefully read the Safety Precautions before installation.**
- In certain functional environments, such as kitchens, server rooms, etc., the use of specially designed air-conditioning units is highly recommended.
- **Only trained and certified technicians should install, repair and service this air conditioning unit.**
  Improper installation may result in electrical shock, short circuit, leaks, fire or other damage to the equipment and personal property.
- **Strictly follow the installation instructions set forth in this manual.**
  Improper installation may result in electrical shock, short circuit, leaks, fire or other damage to the equipment.
- Before you install the unit, consider strong winds, typhoons and earthquakes that might affect your unit and locate it accordingly. Failure to do so could cause the equipment to fail.
- After installation, ensure there are no refrigerant leaks and that the unit is operating properly. Refrigerant is both toxic and flammable and poses a serious health and safety risk.

Note about Fluorinated Gasses

1. This air-conditioning unit contains fluorinated gasses. For specific information on the type of gas and the amount, please refer to the relevant label on the unit itself.
2. Installation, service, maintenance and repair of this unit must be performed by a certified technician.
3. Product uninstallation and recycling must be performed by a certified technician.
4. If the system has a leak-detection system installed, it must be checked for leaks at least every 12 months.
5. When the unit is checked for leaks, proper record-keeping of all checks is strongly recommended.

Installation Overview

3

INSTALLATION ORDER

1

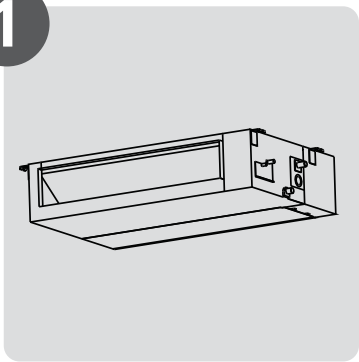

Install the indoor unit
(Page 7)

2

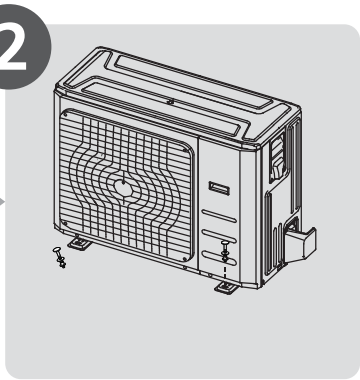

Install the outdoor unit
(Page 18)

3

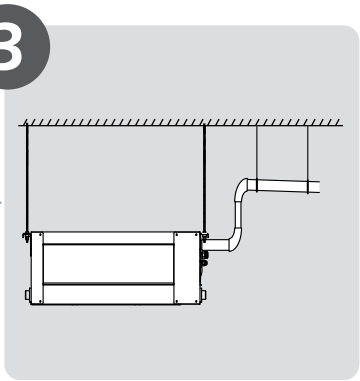

Install the drainpipe
(Page 21)

4

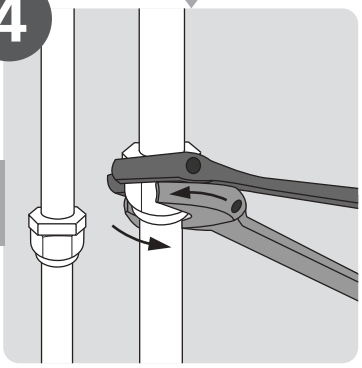

Connect the refrigerant pipes
(Page 23)

5

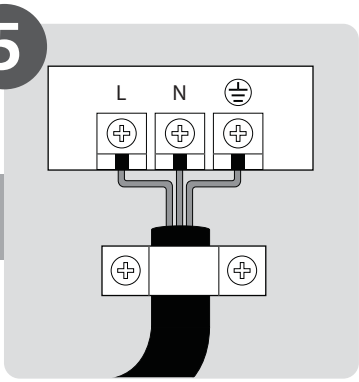

Connect the wires
(Page 26)

6

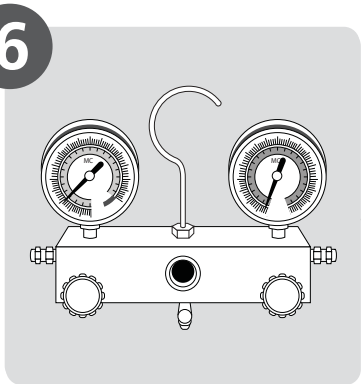

Evacuate the refrigeration system
(Page 30)

7

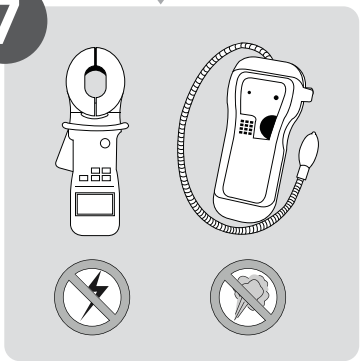

Perform a test run
(Page 32)

Indoor Unit Installation

4

Indoor Unit Parts

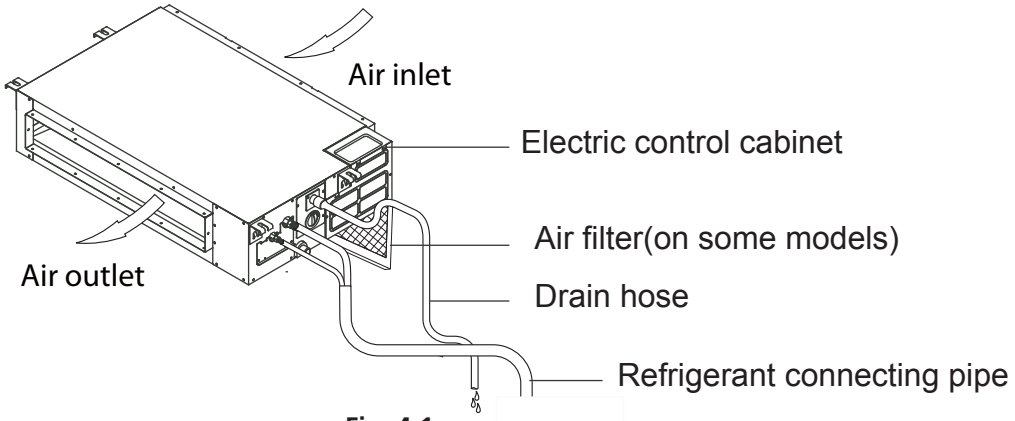

Fig. 4.1

Safety Precautions

WARNING

- Securely install the indoor unit on a structure that can sustain its weight. If the structure is too weak, the unit may fall causing personal injury, unit and property damage, or even death
- **DO NOT** install the indoor unit in a bathroom or laundry room as excessive moisture can short the unit and corrode the wiring.

CAUTION

- Install the indoor and outdoor units, cables and wires at least 1m (3.2') from televisions or radios to prevent static or image distortion. Depending on the appliances, a 1m (3.2') distance may not be sufficient.
- If the indoor unit is installed on a metal part of the building, it must be grounded.

Indoor Unit Installation Instructions

Step 1: Select installation location

The indoor unit should be installed in a location that meets the following requirements:

- ☑ Enough room for installation and maintenance.
- ☑ Enough room for the connecting pipe and drainpipe.
- ☑ The ceiling is horizontal and its structure can sustain the weight of the indoor unit.
- ☑ The air inlet and outlet are not impeded.
- ☑ The airflow can fill the entire room.
- ☑ There is no direct radiation from heaters.

Maintenance roomage

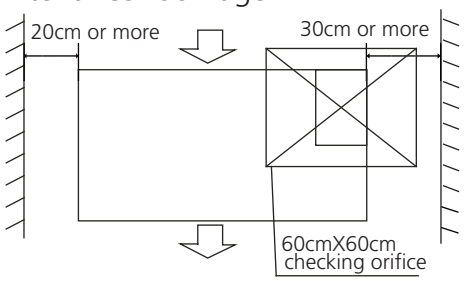

Fig. 4.2

CAUTION

DO NOT install the unit in the following locations:

- ⊘ Where oil drilling or fracking is taking place.
- ⊘ Coastal areas with high salt content in the air
- ⊘ Near geothermal activity and corrosive gas
- ⊘ Buildings that may experience power fluctuations
- ⊘ Enclosed spaces
- ⊘ Areas with strong electromagnetic waves
- ⊘ Areas that store flammable materials or gas
- ⊘ Rooms with high humidity, such as bathrooms or laundry rooms

Step 2: Hang indoor unit.

1. Please refer to the following diagrams to locate the four positioning screw bolt holes on the ceiling. Be sure to mark the paces where you will drill ceiling hook holes.

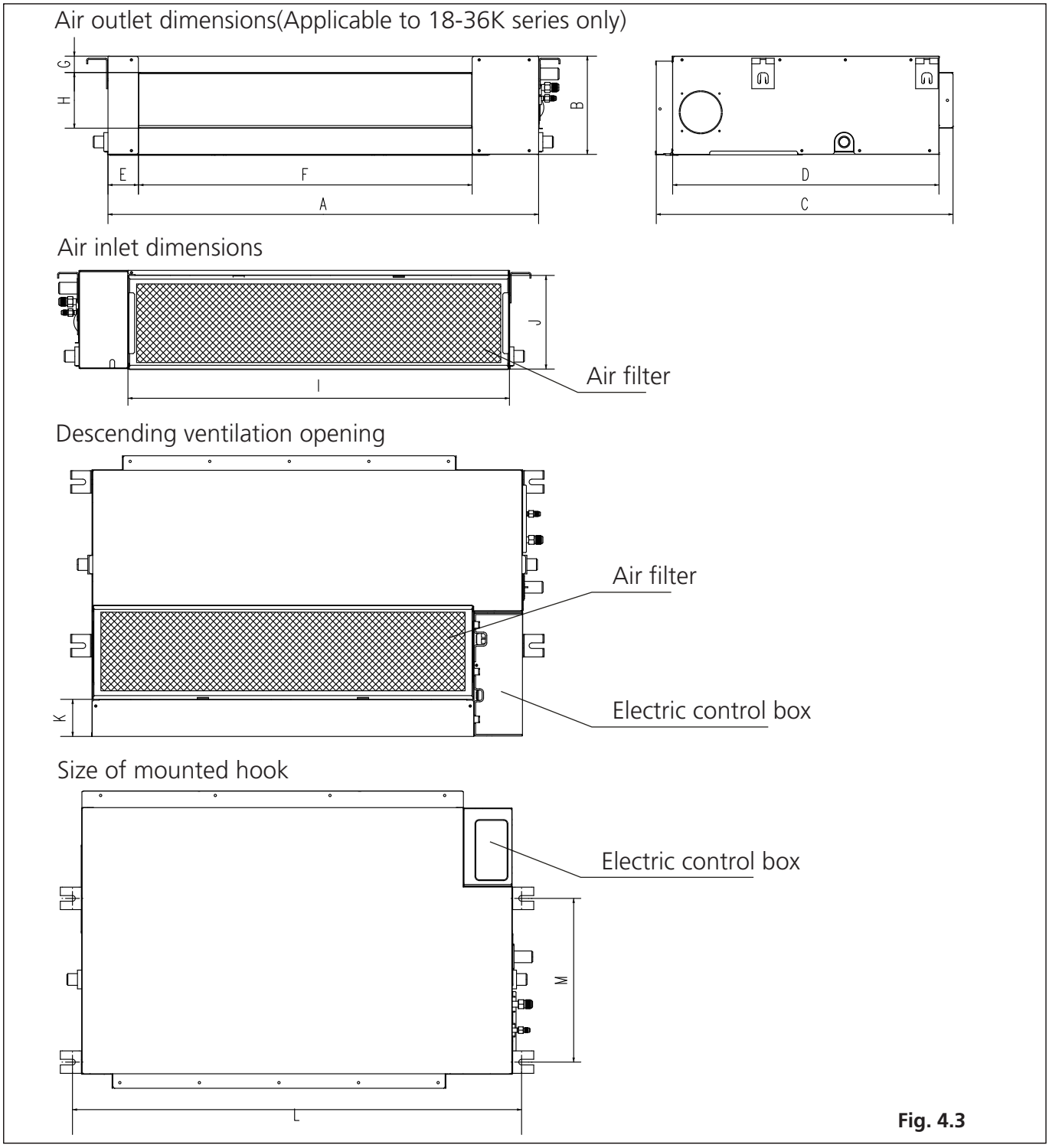

Fig. 4.3

Table.4-1 (unit: mm/inch)

MODEL (Btu/h)	Outline dimension				air outlet opening size				air return opening size			Size of mounted lug	
	A	B	C	D	E	F	G	H	I	J	K	L	M
≤12K	700/27.6	210/8.2	635/25	570/22.4	65/2.6	493/19.4	35/1.4	119/4.7	595/23.4	200/7.9	80/3.2	740/29	350/13.8
12K~18K	920/36.2	210/8.2	635/25	570/22.4	65/2.6	713/28	35/1.4	119/4.7	815/32	200/7.9	80/3.2	960/37.8	350/13.8
24K	920/36.2	270/10.6	635/25	570/22.4	65/2.6	713/28	35/1.4	179/7	815/32	260/10.2	20/0.78	960/37.8	350/13.8
36K(small model)	920/36.2	270/10.6	635/25	570/22.4	65/2.6	713/28	35/1.4	179/7	815/32	260/10.2	20/0.78	960/37.8	350/13.8
30K~36K	1140/44.9	270/10.6	775/30.5	710/28	65/2.6	933/36.7	35/1.4	179/7	1035/40.7	260/10.9	20/0.78	1180/46.5	490/19.3
42K~60K	1200/47.2	300/11.8	865/34	800/31.5	80/3.1	968/38.1	40/1.6	204/8	1094/43	288/11.3	45/1.8	1240/48.8	500/19.7

Wood

Place the wood mounting across the roof beam, then install the hanging screw bolts.(See Fig.4.4)

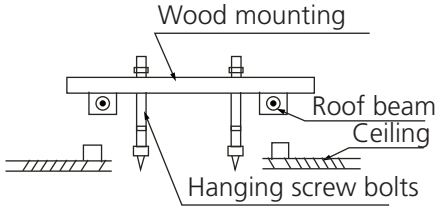

Fig. 4.4

New concrete bricks

Inlay or embed the screw bolts. (See Fig. 4.5)

(Blade shape insertion)

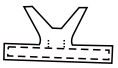

(Slide insertion)

Fig. 4.5

Original concrete bricks

Use embedding screw bold, crock and stick harness.(Refer to Fig.4-6)

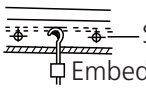

(Pipe hanging and embedding screw bolt)

Fig. 4.6

Steel roof beam structure

Install and use the supporting steel angle. (See Fig.4.7)

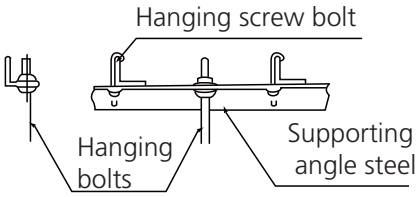

Fig. 4.7

! CAUTION

The unit body must be completely aligned with the hole. Ensure that the unit and the hole are the same size before moving on.

2. Install and fit pipes and wires after you have finished installing the main body.When choosing where to start, determine the direction of the pipes to be drawn out. Especially in cases where there is a ceiling involved, align the refrigerant pipes, drain pipes, and indoor and outdoor lines with their connection points before mounting the unit.
3. Install hanging screw bolts.
   - Cut off the roof beam.
   - Strengthen the point at which the cut was made. Consolidate the roof beam.
4. After you select an installation location,align the refrigerant pipes, drain pipes, as well as indoor and outdoor wires with their connection points before mounting the unit.
5. Drill 4 holes 10cm (4”) deep at the ceiling hook positions in the internal ceiling. Be sure to hold the drill at a 90° angle to the ceiling.
6. Secure the bolt using the washers and nuts provided.
7. Install the four suspension bolts.
8. Mount the indoor unit with at least two people to lift and secure it. Insert suspension bolts into the unit’s hanging holes. Fasten them using the washers and nuts provided. (See Fig. 4.8).

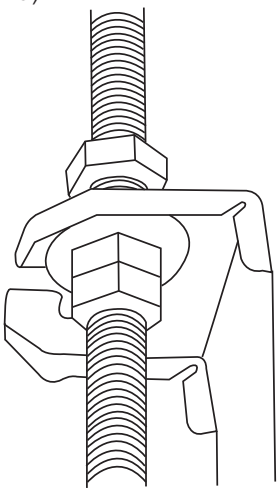

Fig. 4.8

9. Mount the indoor unit onto the hanging screw bolts with a block. Position the indoor unit flat using a level indicator to prevent leaks. (See Fig. 4.9).

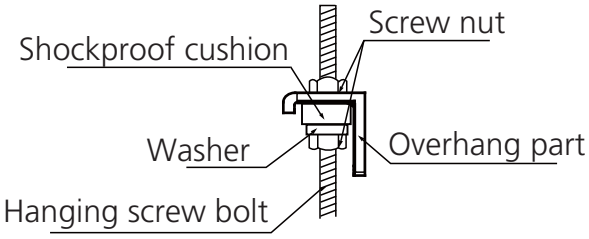

Fig. 4.9

NOTE: Confirm the minimum drain tilt is 1/100 or more.

Step 3: Duct and accessories installation

1. Install the filter(optional) according to air inlet size.
2. Install the canvas tie-in between the body and duct.
3. The air inlet and air outlet duct should be far enough apart enough to a avoid air passage short-circuit.
4. Connect the duct according to the following diagram:

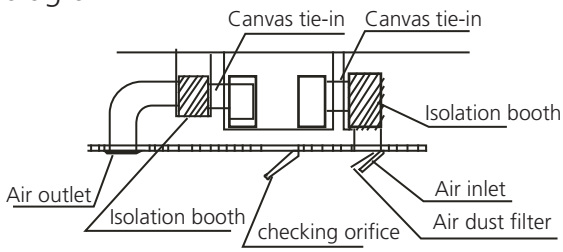

Fig. 4.10

5. Refer to the following static pressure guidelines when installing the indoor unit.

Table.4-2

MODEL (Btu/h)	Static Pressure (Pa)
12K	30
18K	70
24K	70
30K~36K	80
42K~60K	100

Change the fan motor static pressure according to external duct static pressure.

NOTE: 1.Do not put the connecting duct weight on the indoor unit.
2. When connecting the duct, use an nonflammable canvas tie-in to prevent vibrating.
3. Insulation foam must be wrapped outside the duct to avoid condensate. An internal duct underlayer can be added to reduce noise, if the end-user requires.

Step 4: Control (only for inverter units)

- The capacity of the system and the network address of the air-conditioner can be set by the switches on the indoor Main Control Board.
- Before setting, turn off the power. After setting, restart the unit.
- Setting is not allowed when the unit is power on.

1 Horsepower code setting

The capacity of the indoor unit has been set in the factory according to the below table.

Horsepower code

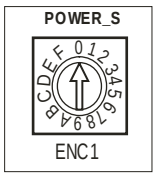

Table 4-3

ENC1	Toggle switch Code	Capacity(kw)
Note: The capacity has been set in the factory, anyone can't adjust it except the qualified person.	4	5.3
		5.6
	5	7.1
	7	9.0
	8	10.5
	9	14.0
		16.0

2 Network address set

Every air-conditioner in network has only one network address to distinguish each other. Address code of air-conditioner in LAN is set by code switches S1 & S2 on
the Main Control Board of the indoor unit, and the set range is 0-63.

Table 4-4

Toggle switch set		Network address code
S1	S2	
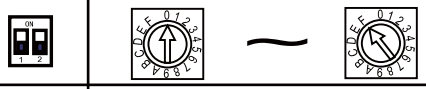		00~15
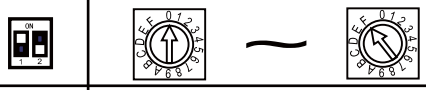		16~31
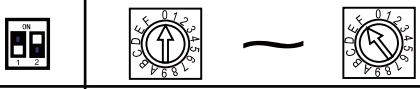		32~47
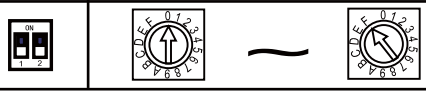		48-63

Step 5: Adjust the air inlet direction (From rear side to under-side.)

1. Take off ventilation panel and flange, cut off the staples at side rail.

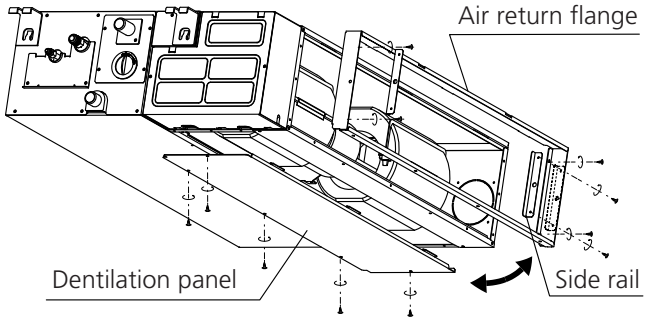

2. Stick the attached seal sponge as per the indicating place in the following fig, and then change the mounting positions of air return panel and air return flange .

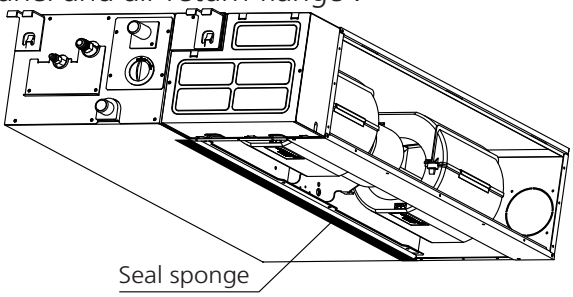

3. When installing the filter mesh, fit it into the flange inclined from air return opening, and then push up.

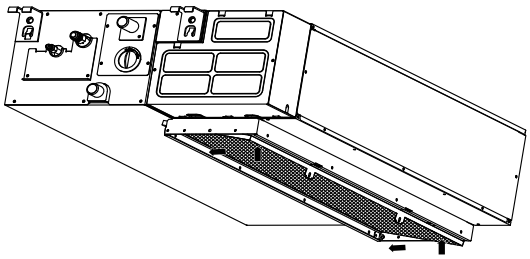

4. The installation has finish, upon filter mesh which fixing blocks have been insert to the flange positional holes.

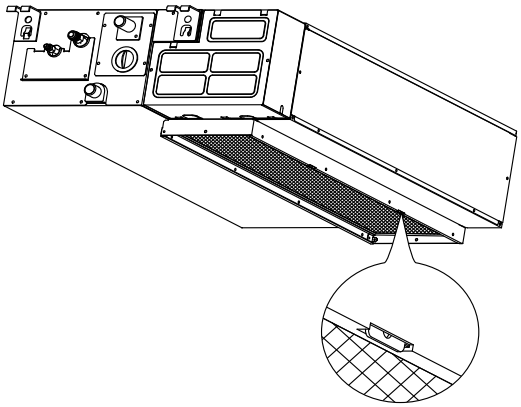

NOTE: All the figures in this manual are for demonstration purposes only. The air conditioner you have purchased may be slightly different in design, though similar in shape.

Step 6: Fresh air duct installation

Dimension :

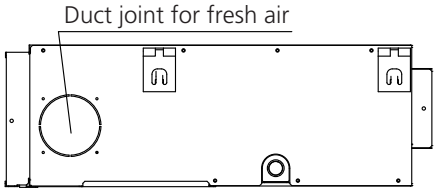

MODLE	
12-24	30-60
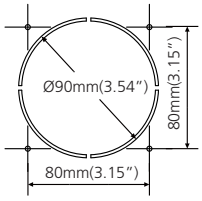	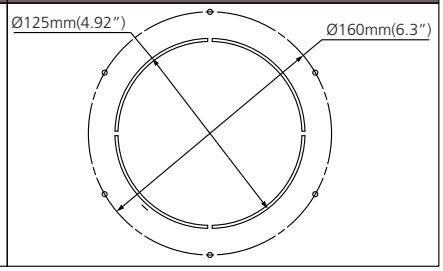

Step 7: Motor and drain pump maintenance

(the rear ventilated panel is used as an example)

Motor maintain:

1. Take off the ventilated panel.
2. Take off the blower housing.
3. Take off the motor.

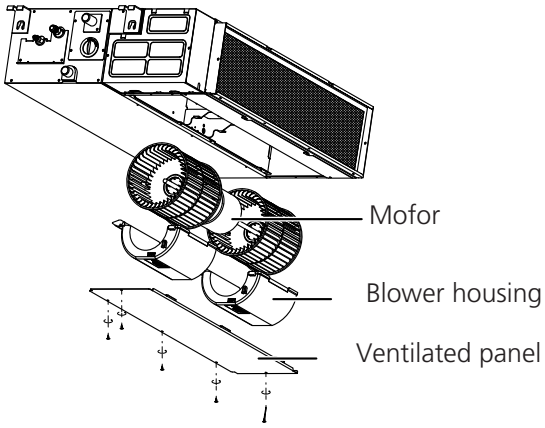

Pump maintainance:

1. Remove four screws from the drain pump.
2. Unplug the pump power supply and water level switch cable.
3. Detach the pump.

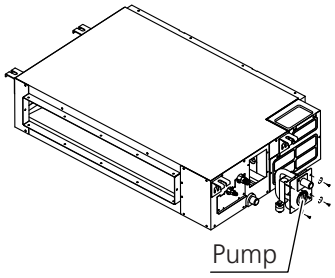

Fan performances

Static pressure curve(middle static pressure duct)

9K

Code 0

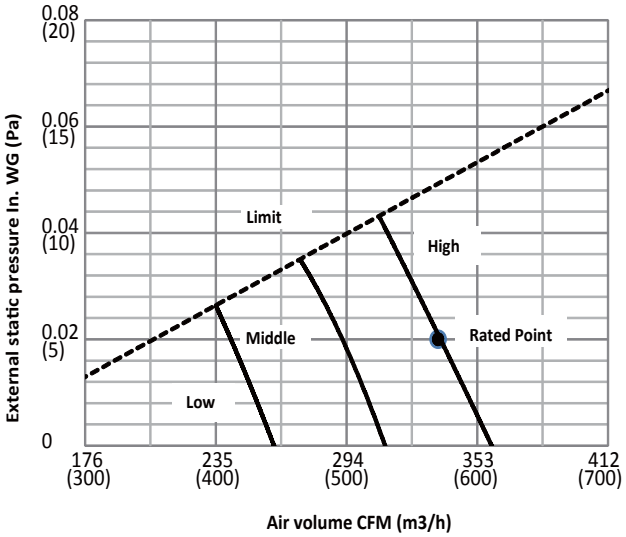

Code 1

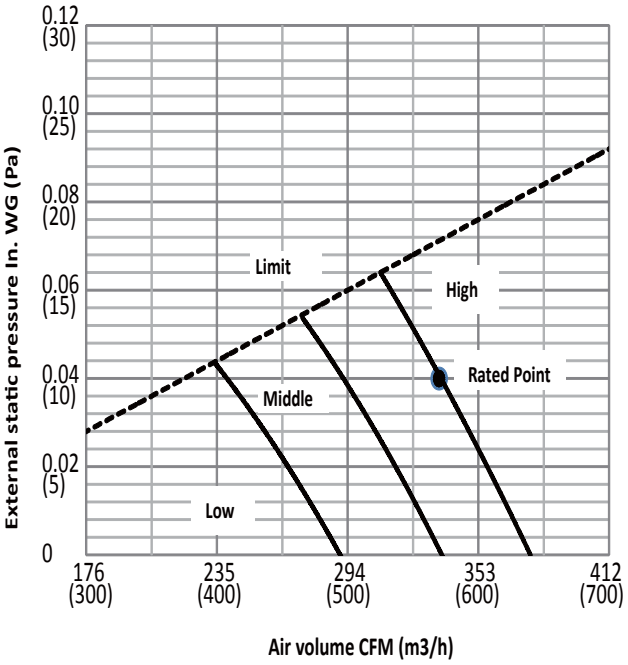

Code 2

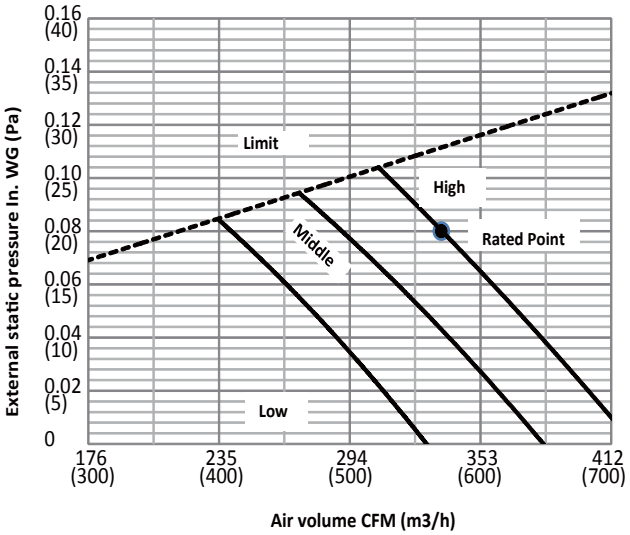

Code 3

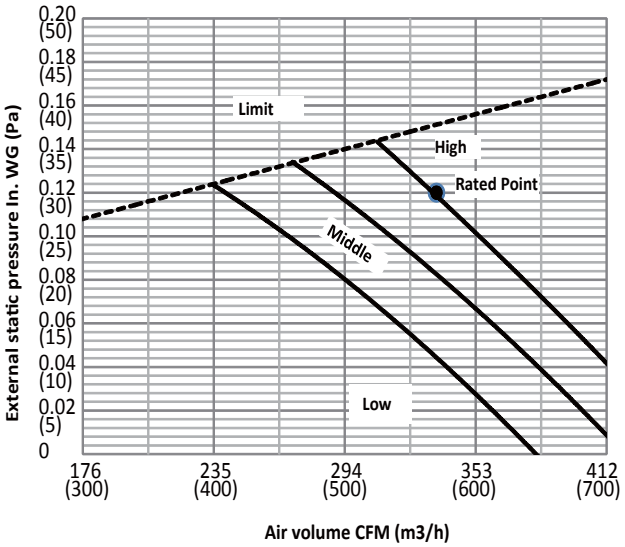

Code 4

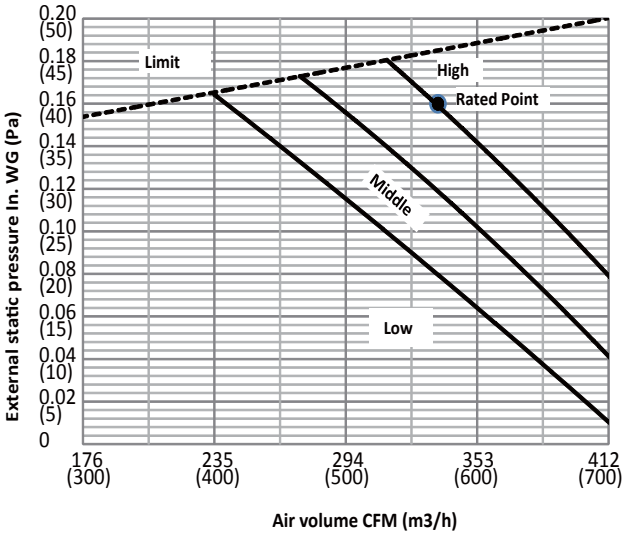

12K

Code 0

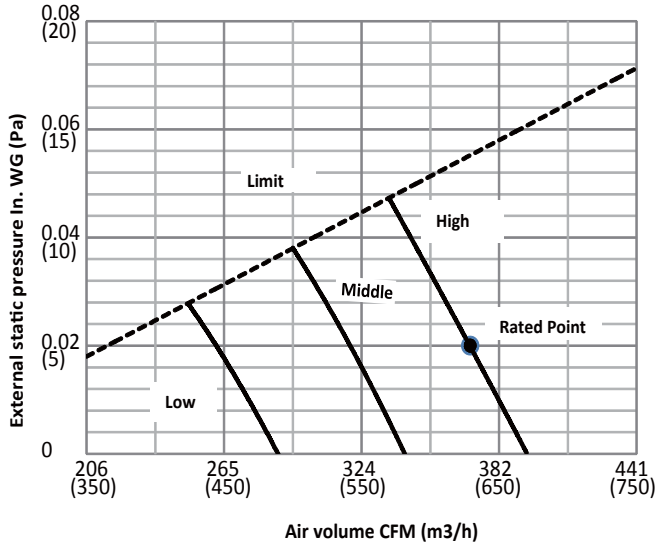

Code 1

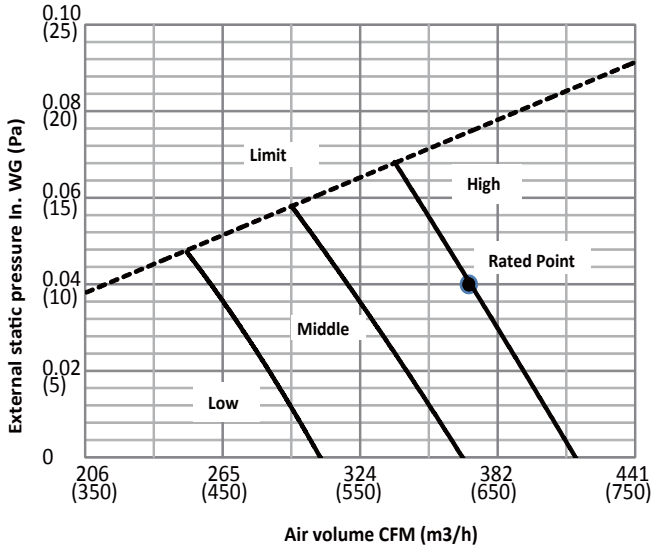

Code 2

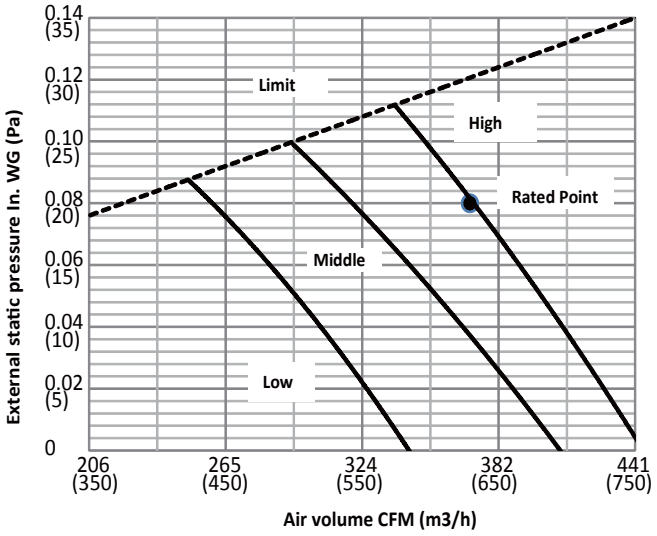

Code 3

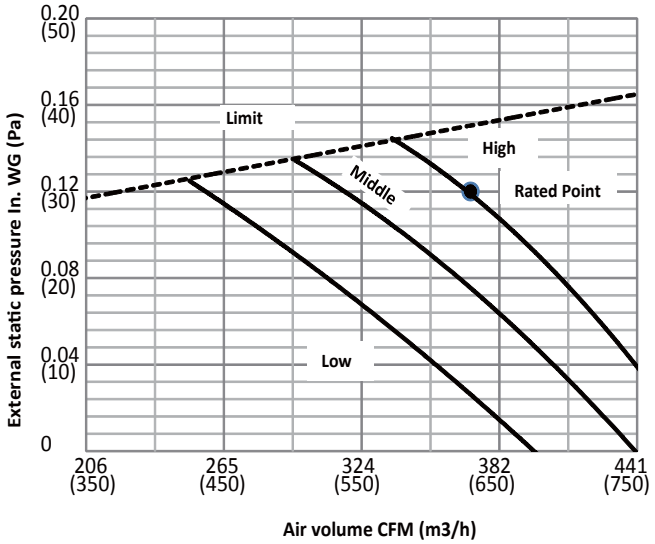

Code 4

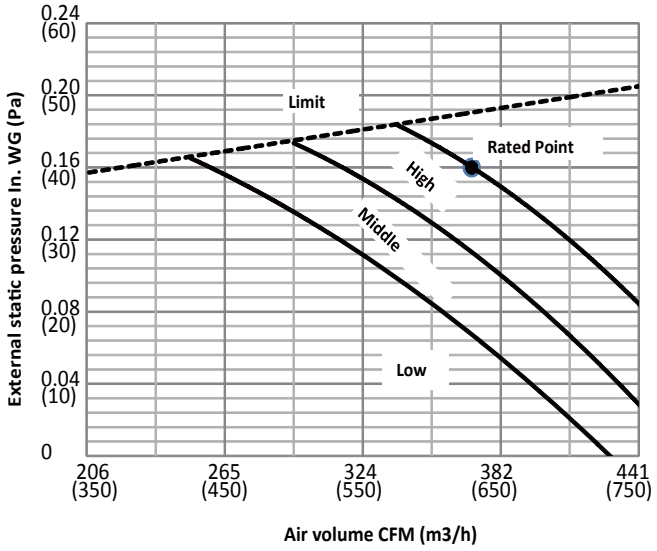

18K

Code 0

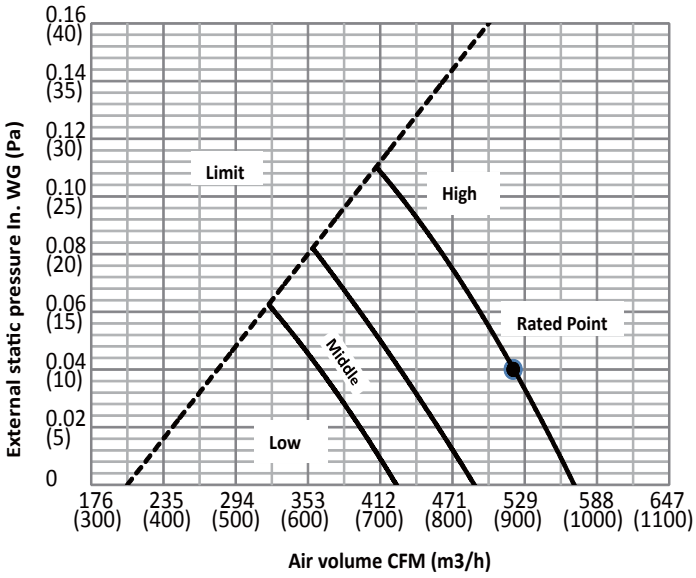

Code 1

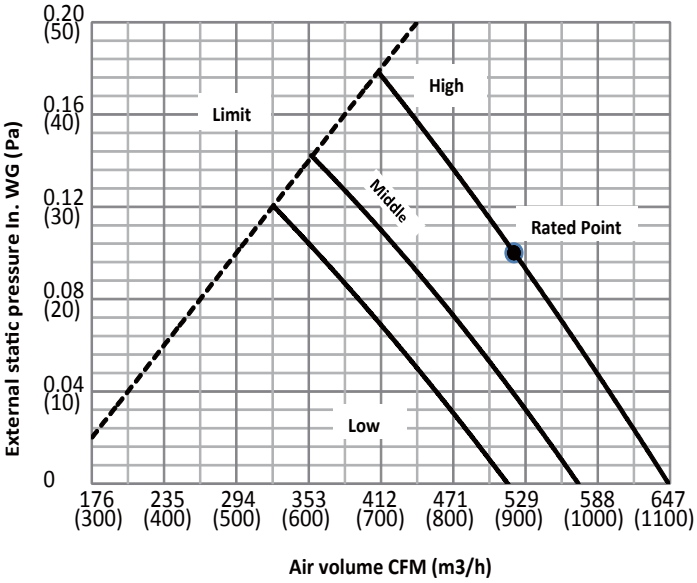

Code 2

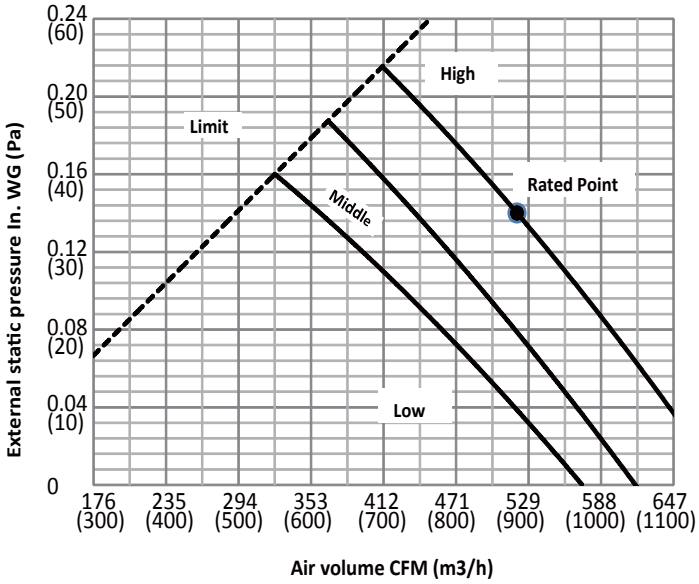

Code 3

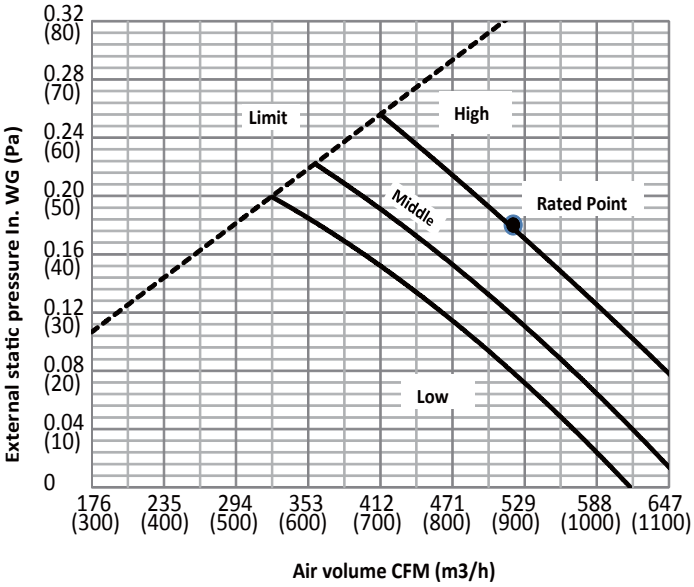

Code 4

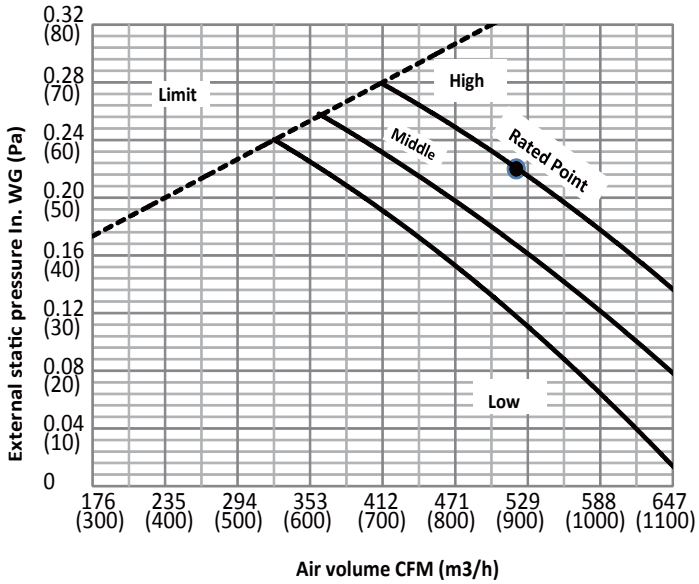

24K

Code 0

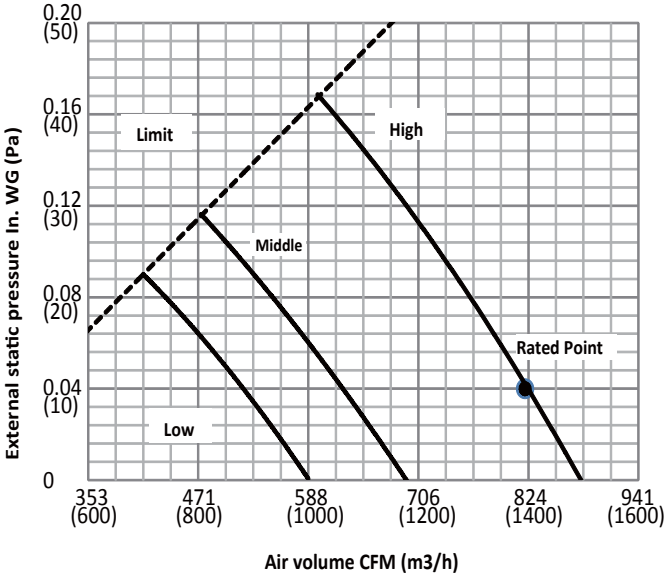

Code 1

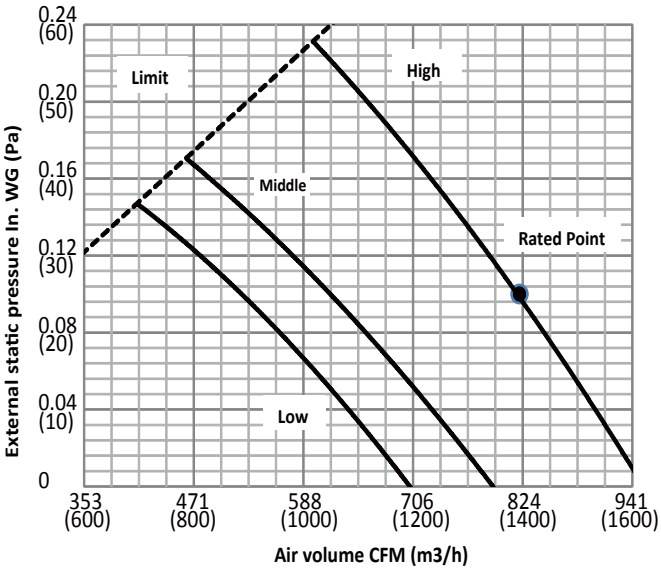

Code 2

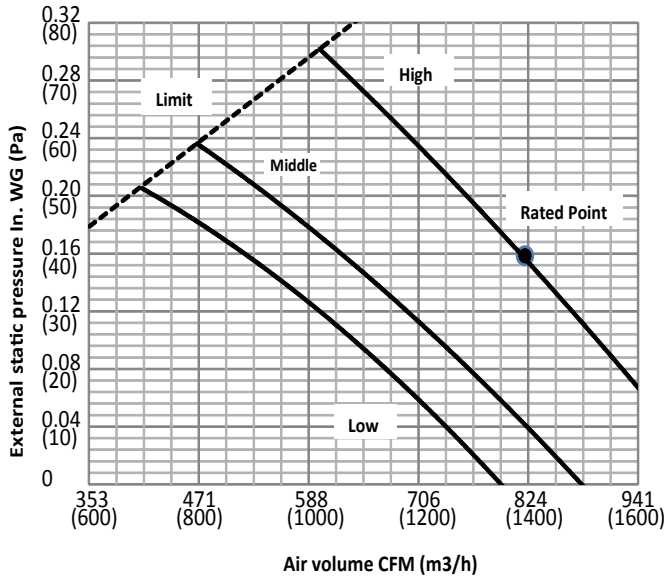

Code 3

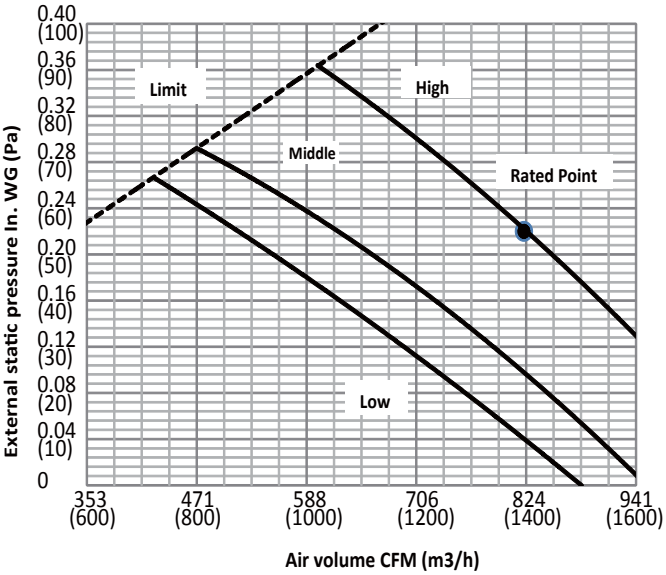

Code 4

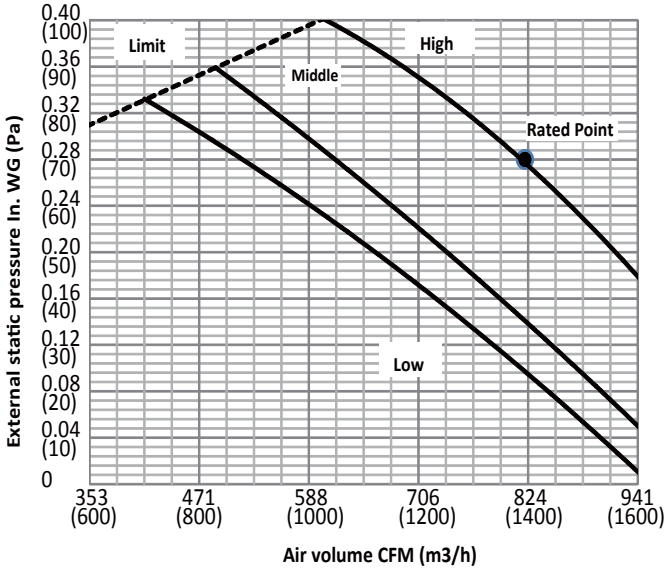

36K

Code 0

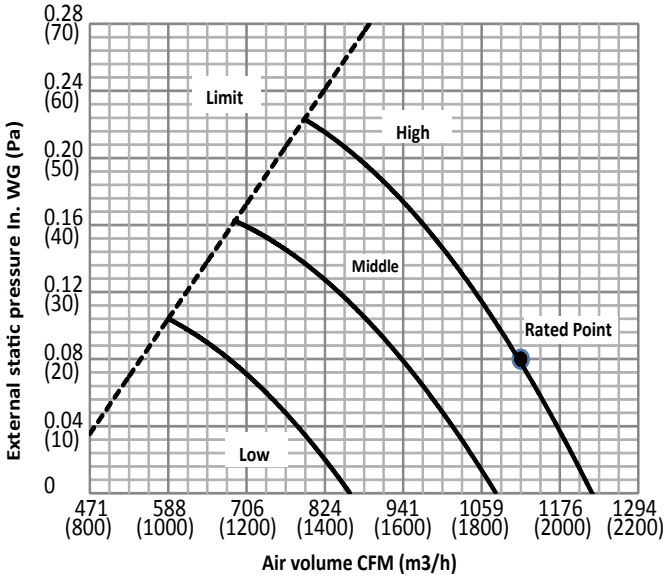

Code 1

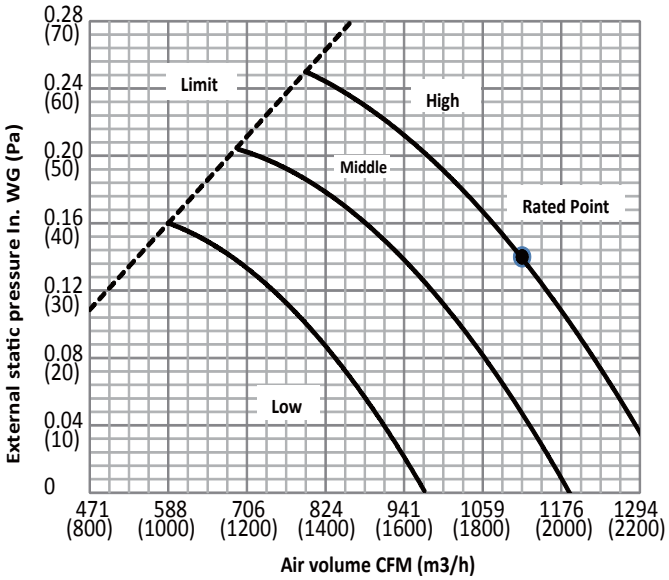

Code 2

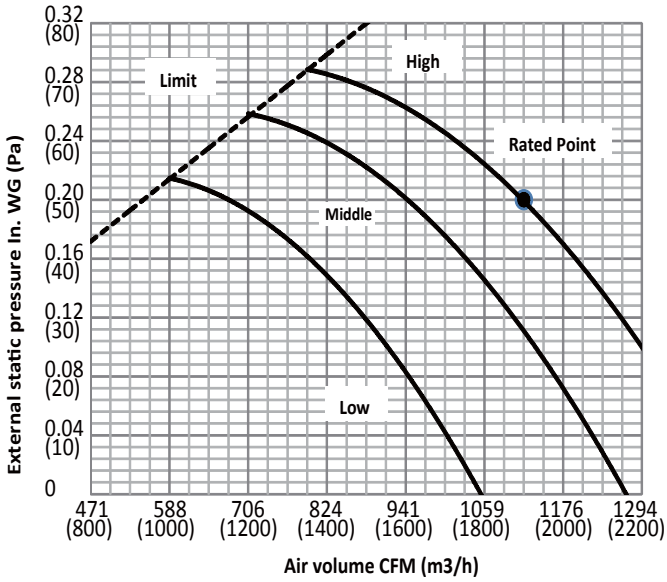

Code 3

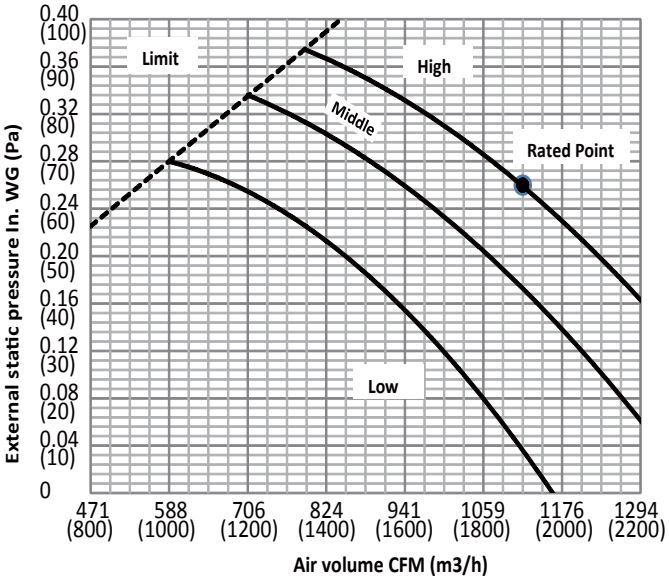

Code 4

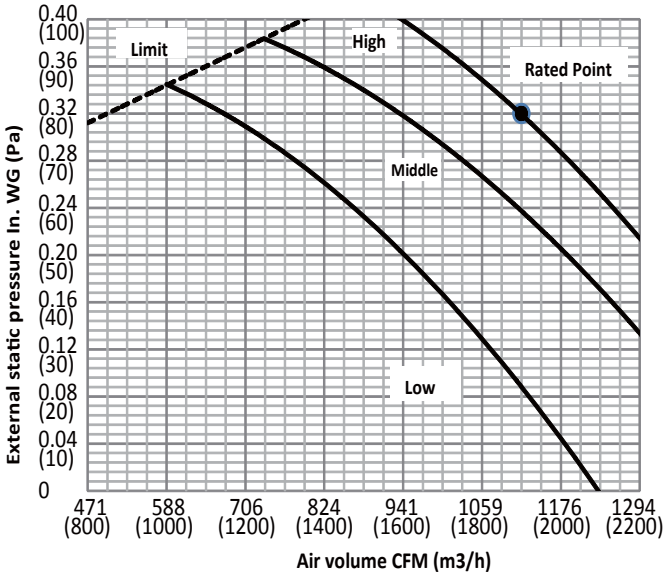

48K

Code 0

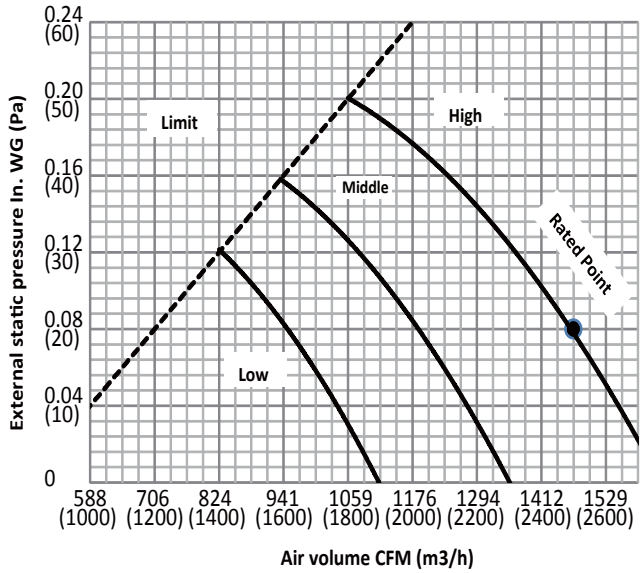

Code 1

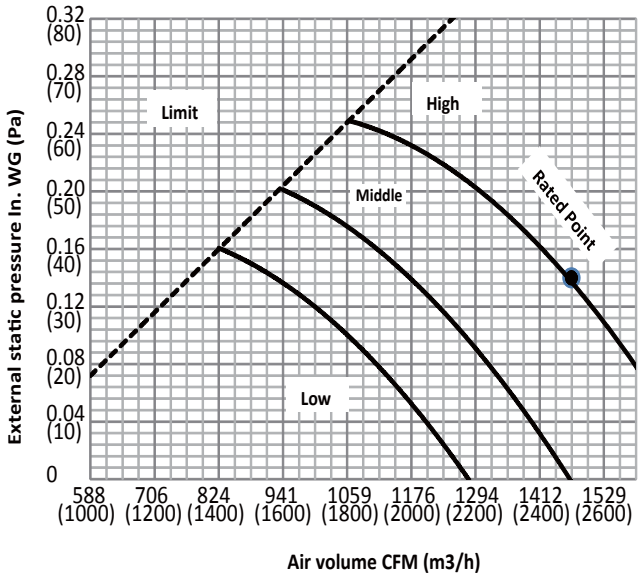

Code 2

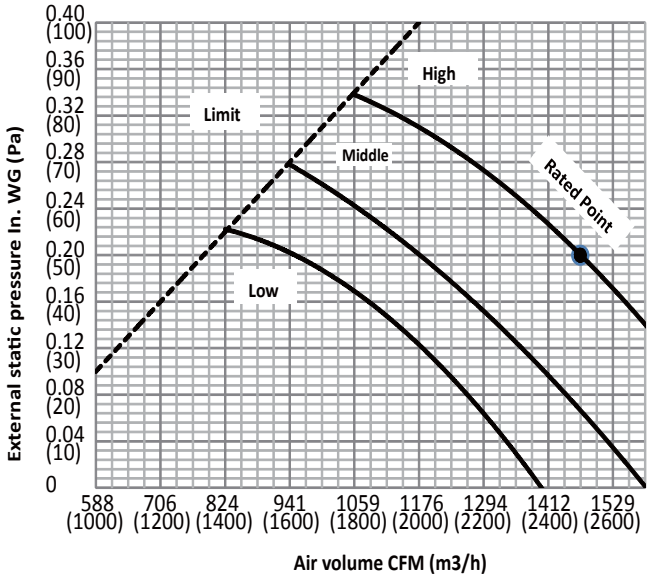

Code 3

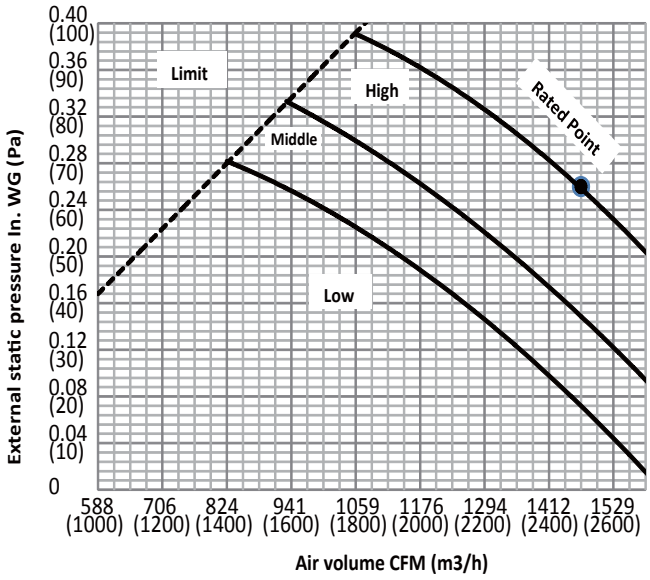

Code 4

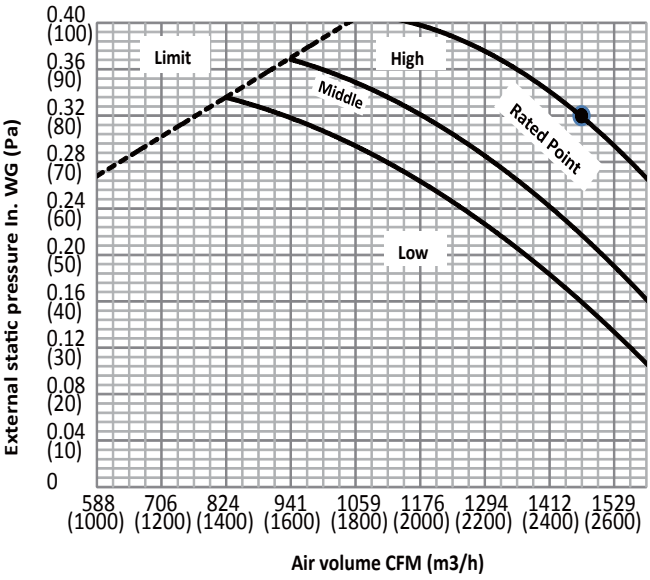

Outdoor Unit Installation Instructions

Step 1: Select installation location.

The outdoor unit should be installed in the location that meets the following requirements:

- ☑ Place the outdoor unit as close to the indoor unit as possible.
- ☑ Ensure that there is enough room for installation and maintenance.
- ☑ The air inlet and outlet must not be obstructed or exposed to strong wind.
- ☑ Ensure the location of the unit will not be subject to snowdrifts, accumulation of leaves or other seasonal debris. If possible, provide an awning for the unit. Ensure the awning does not obstruct airflow.
- ☑ The installation area must be dry and well ventilated.
- ☑ There must be enough room to install the connecting pipes and cables and to access them for maintenance.
- ☑ The area must be free of combustible gases and chemicals.
- ☑ The pipe length between the outdoor and indoor unit may not exceed the maximum allowable pipe length.
- ☑ If possible, **DO NOT** install the unit where it is exposed to direct sunlight.
- ☑ If possible, make sure the unit is located far away from your neighbors' property so that the noise from the unit will not disturb them.
- ☑ If the location is exposed to strong winds (for example: near a seaside), the unit must be placed against the wall to shelter it from the wind. If necessary, use an awning. (See Fig. 5.1 & 5.2)
- ☑ Install the indoor and outdoor units, cables and wires at least 1 meter from televisions or radios to prevent static or image distortion. Depending on the radio waves, a 1 meter distance may not be enough to eliminate all interference.

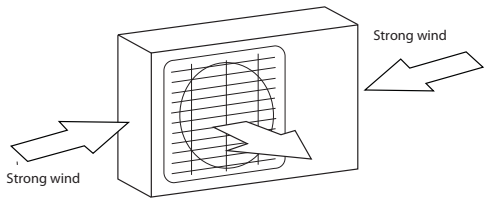

Fig. 5.1

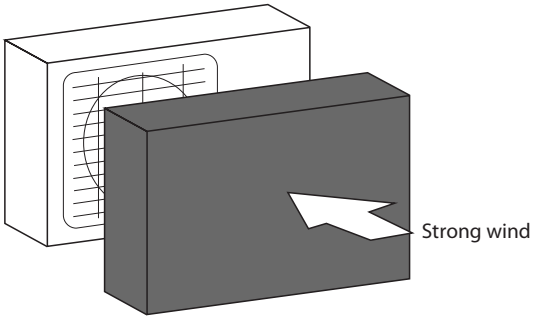

Fig. 5.2

Step 2: Install outdoor unit.

Fix the outdoor unit with anchor bolts (M10)

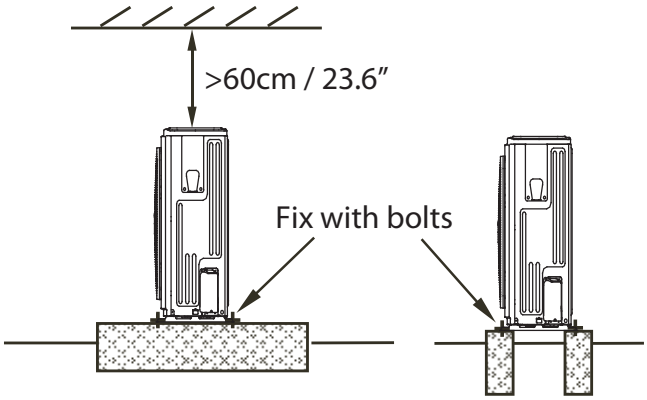

Fig. 5.3

! CAUTION

- Be sure to remove any obstacles that may block air circulation.
- Make sure you refer to Length Specifications to ensure there is enough room for installation and maintenance.

Split Type Outdoor Unit

(Refer to Fig 5.4, 5.5, 5.6, 5.10 and Table 5.1)

Fig. 5.4

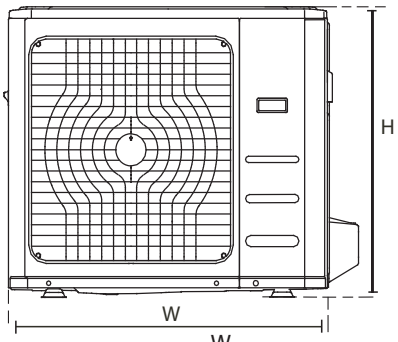

Fig. 5.5

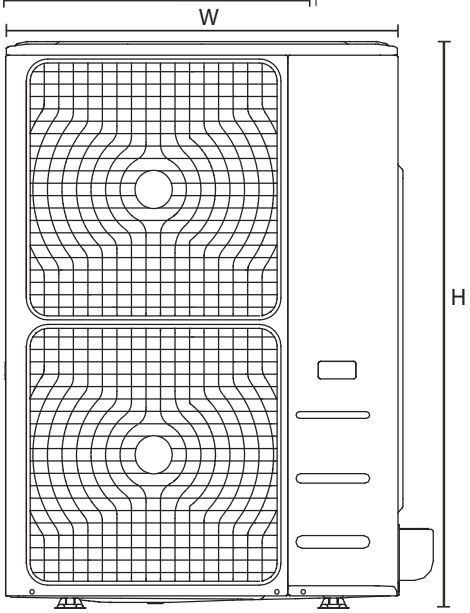

Fig. 5.6

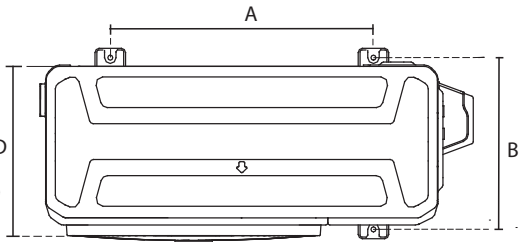

Table 5.1: Length Specifications of Split Type Outdoor Unit (unit: mm/inch)

Outdoor Unit Dimensions	Mounting Dimensions	
W x H x D	Distance A	Distance B
760x590x285 (29.9x23.2x11.2)	530 (20.85)	290 (11.4)
810x558x310 (31.9x22x12.2)	549 (21.6)	325 (12.8)
845x700x320 (33.25x27.5x12.6)	560 (22)	335 (13.2)
900x860x315 (35.4x33.85x12.4)	590 (23.2)	333 (13.1)
945x810x395 (37.2x31.9x15.55)	640 (25.2)	405 (15.95)
990x965x345 (38.98x38x13.58)	624 (24.58)	366 (14.4)
938x1369x392 (36.93x53.9x15.43)	634 (24.96)	404 (15.9)
900x1170x350 (35.4x46x13.8)	590 (23.2)	378 (14.88)
800x554x333 (31.5x21.8x13.1)	514 (20.24)	340 (13.39)
845x700x340 (33.25x27.5x13.38)	540 (21.26)	350 (13.8)
946x810x420 (37.21x31.9x16.53)	673 (26.5)	403 (15.87)
950x1333x410 (37.4x52.48x16.14)	634 (24.96)	404 (15.9)

Vertical Discharge Type Outdoor Unit

(Refer to Fig 5.7, 5.8, 5.9 and Table 5.2)

Fig. 5.7

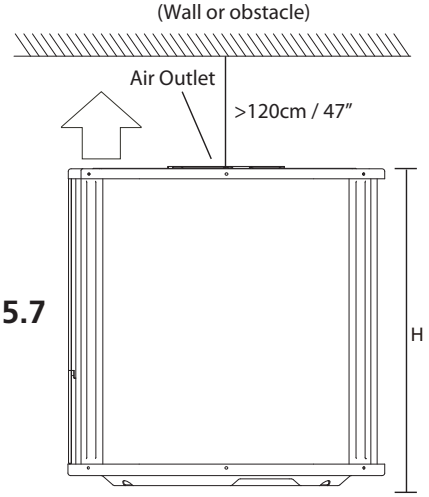

Fig. 5.8

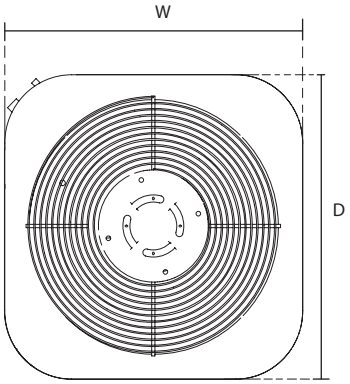

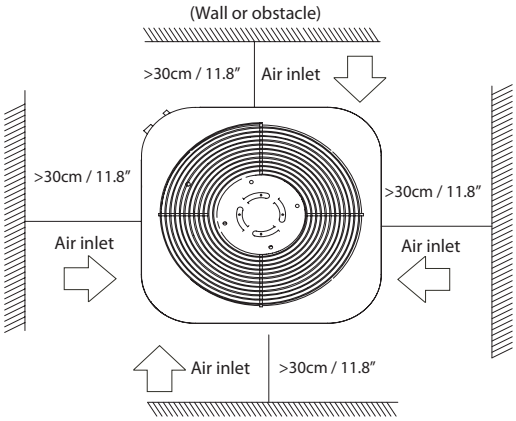

Fig. 5.9

Table 5.2: Length Specifications of Vertical Discharge Outdoor Unit (unit: mm/inch)

MODEL	DIMENSIONS		
	W	H	D
18	554/21.8	633/25	554/21.8
24	554/21.8	633/25	554/21.8
36	554/21.8	759/29.8	554/21.8
36	600/23.6	633/25	600/23.6
48	710/28	759/29.8	710/28
60	710/28	843/33	710/28

NOTE: The minimum distance between the outdoor unit and walls described in the installation guide does not apply to airtight rooms. Be sure to keep the unit unobstructed in at least two of the three directions (M, N, P) (See Fig. 5.10)

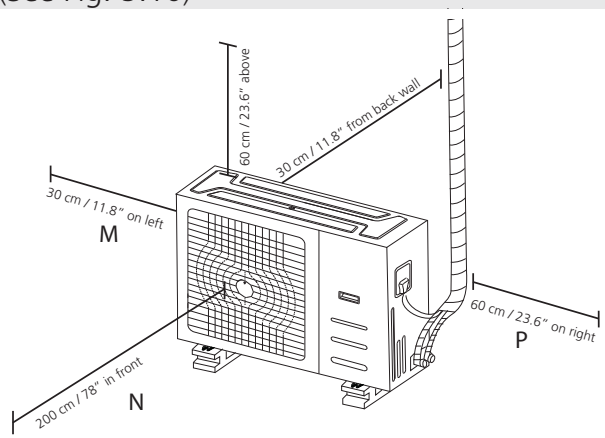

Fig. 5.10

Rows of series installation

Table 5.3 The relations between H, A and L are as follows.

	L	A
L ≤ H	L ≤ 1/2H	25 cm / 9.8" or more
	1/2H < L ≤ H	30 cm / 11.8" or more
L > H	Can not be installed	

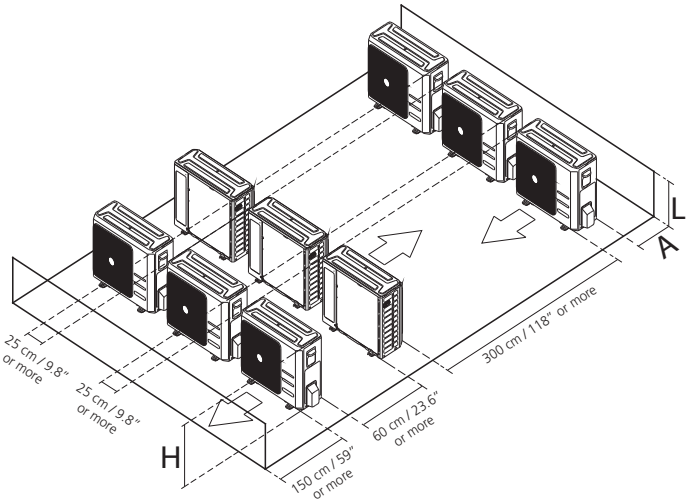

Fig. 5.11

Drain Joint Installation

Before bolting the outdoor unit in place, you must install the drain joint at the bottom of the unit. (See Fig. 5.12)

1. Fit the rubber seal on the end of the drain joint that will connect to the outdoor unit.
2. Insert the drain joint into the hole in the base pan of the unit.
3. Rotate the drain joint 90° until it clicks in place facing the front of the unit.
4. Connect a drain hose extension (not included) to the drain joint to redirect water from the unit during heating mode.

NOTE: Make sure the water drains to a safe location where it will not cause water damage or a slipping hazard.

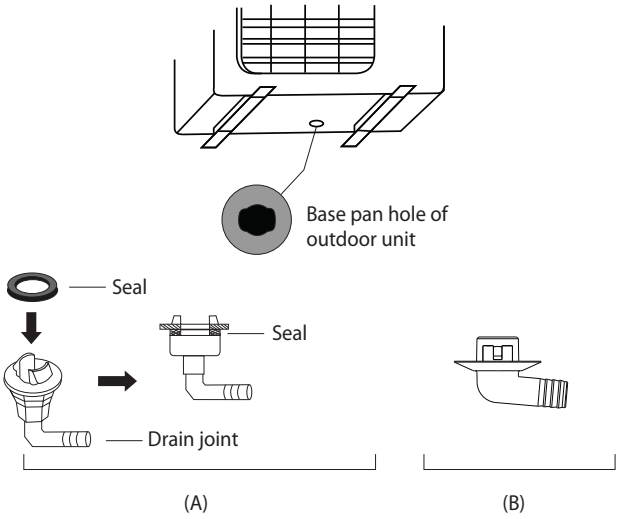

Fig. 5.12

Notes On Drilling Hole In Wall

You must drill a hole in the wall for the refrigerant piping, and the signal cable that will connect the indoor and outdoor units.

1. Determine the location of the wall hole based on the location of the outdoor unit.
2. Using a 65-mm (2.5") core drill, drill a hole in the wall.

   NOTE: When drilling the wall hole, make sure to avoid wires, plumbing, and other sensitive components.

3. Place the protective wall cuff in the hole. This protects the edges of the hole and will help seal it when you finish the installation process.

Drainpipe Installation

6

The drainpipe is used to drain water away from the unit. Improper installation may cause unit and property damage.

CAUTION

- Insulate all piping to prevent condensation, which could lead to water damage.
- If the drainpipe is bent or installed incorrectly, water may leak and cause a water-level switch malfunction.
- In HEAT mode, the outdoor unit will discharge water. Ensure that the drain hose is placed in an appropriate area to avoid water damage and slippage.
- **DO NOT** pull the drainpipe forcefully. This could disconnect it.

NOTE ON PURCHASING PIPES

Installation requires a polyethylene tube (exterior diameter = 3.7-3.9cm, interior diameter = 3.2cm), which can be obtained at your local hardware store or dealer.

Indoor Drainpipe Installation

Install the drainpipe as illustrated in Figure 6.2.

1. Cover the drainpipe with heat insulation to prevent condensation and leakage.
2. Attach the mouth of the drain hose to the unit's outlet pipe. Sheath the mouth of the hose and clip it firmly with a pipe clasp. (Fig 6.1)

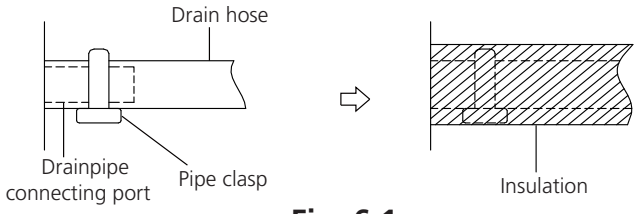

Fig. 6.1

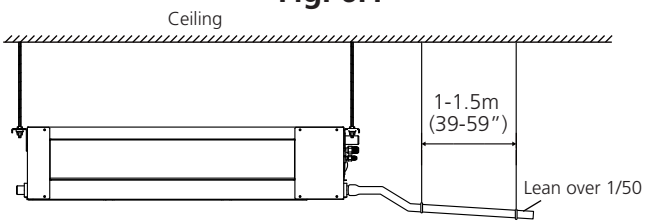

Fig. 6.2

NOTE ON DRAINPIPE INSTALLATION

- When using an extended drainpipe, tighten the indoor connection with an additional protection tube to prevent it from pulling loose.
- The drainpipe should slope downward at a gradient of at least 1/100 to prevent water from flowing back into the air conditioner.
- To prevent the pipe from sagging, space hanging wires every 1-1.5m (39-59").
- If the outlet of the drainpipe is higher than the body's pump joint, provide a lift pipe for the exhaust outlet of the indoor unit. The lift pipe must be installed no higher than 55cm (21.7") from the ceiling board. The distance between the unit and the lift pipe must be less than 20cm (7.9"). Incorrect installation could cause water to flow back into the unit and flood.
- To prevent air bubbles, keep the drain hose level or slightly tiled up (<75mm / 3").

Drainpipe installation for units with a pump

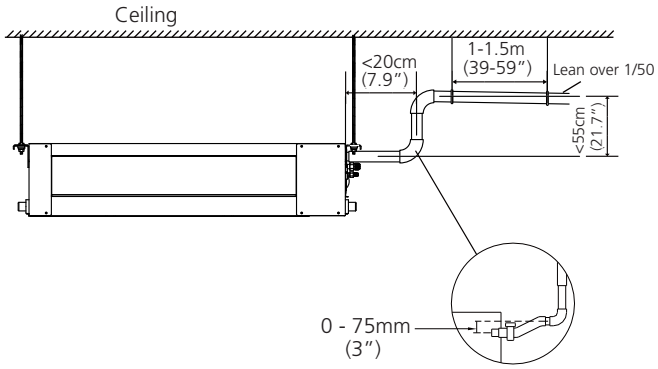

Fig. 6.3

NOTE: When connecting multiple drainpipes, install the pipes as shown in Fig 6.4.

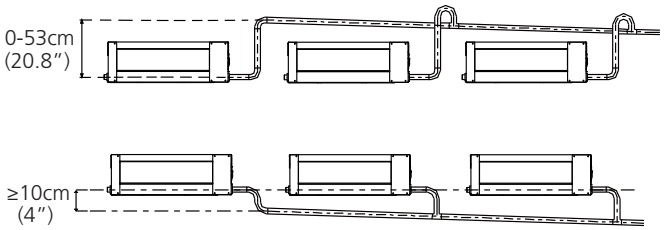

Fig. 6.4

3. Using a 65-mm (2.5”) core drill, drill a hole in the wall. Make sure that the hole is drilled at a slight downward angle, so that the outdoor end of the hole is lower than the indoor end by about 12mm (0.5”). This will ensure proper water drainage (See Fig. 6.5). Place the protective wall cuff in the hole. This protects the edges of the hole and will help seal it once you finish installation.

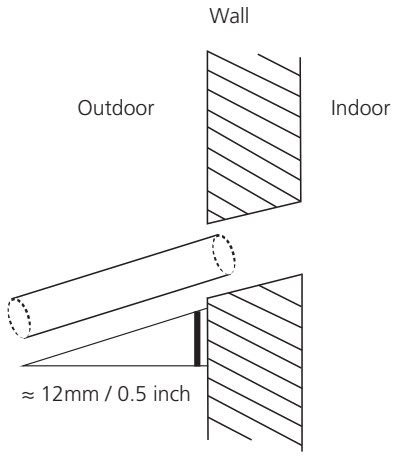

Fig. 6.5

NOTE: When drilling the hole, make sure to avoid wires, plumbing, and other sensitive components.

4. Pass the drain hose through the wall hole. Make sure the water drains to a safe location where it will not cause water damage or a slipping hazard.

NOTE: The drainpipe outlet should be at least 5cm (1.9”) above the ground. If it touches the ground, the unit may become blocked and malfunction. If you discharge the water directly into a sewer, make sure that the drain has a U or S pipe to catch odors that might otherwise come back into the house.

Drainage test

Check that the drainpipe is unhindered.
This test should be performed on newly built houses before the ceiling is paved.

Units without a pump.

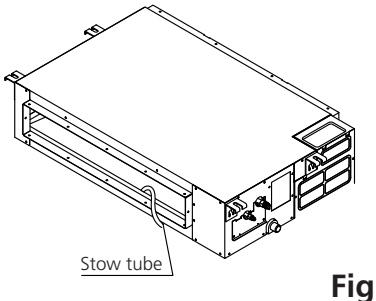

Fig. 6.6

Fill the water pan with 2 liters of water.
Check that the drainpipe is unhindered.

Units with a pump.

1. Remove the test cover.
   Fill the water pan with 2 liters of water.

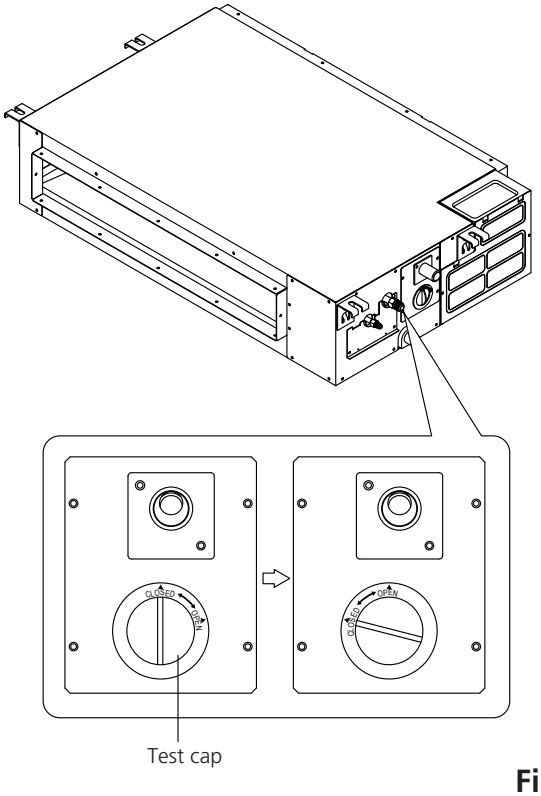

Fig. 6.7

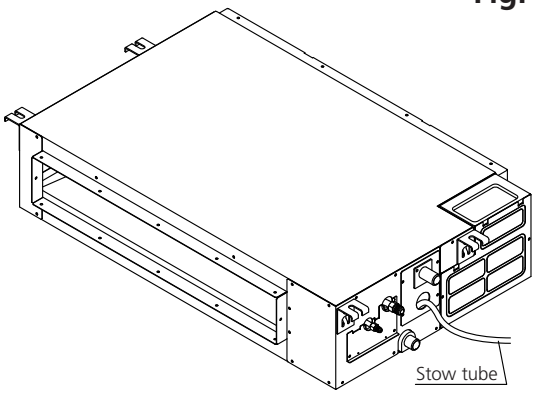

Fig. 6.8

2. Turn on the unit in COOLING mode. You will hear the drain pump.Check whether the water is discharged properly (a 1-minute lag is possible, depending on the length of the drain pipe), Check whether water leaks from the joints.

3. Turn off the air conditioner and put the cap back on.

Refrigerant Piping Connection

7

Safety Precautions

WARNING

- All field piping must be completed by a licensed technician and must comply with the local and national regulations.
- When the air conditioner is installed in a small room, measures must be taken to prevent the refrigerant concentration in the room from exceeding the safety limit in the event of refrigerant leakage. If the refrigerant leaks and its concentration exceeds its proper limit, hazards due to lack of oxygen may result.
- When installing the refrigeration system, ensure that air, dust, moisture or foreign substances do not enter the refrigerant circuit. Contamination in the system may cause poor operating capacity, high pressure in the refrigeration cycle, explosion or injury.
- Ventilate the area immediately if there is refrigerant leakage during the installation. Leaked refrigerant gas is both toxic and flammable. Ensure there is no refrigerant leakage after completing the installation work.

Notes On Pipe Length and Elevation

Ensure that the length of the refrigerant pipe, the number of bends, and the drop height between the indoor and outdoor units meets the requirements shown in Table 7.1:

Table 7.1: The Maximum Length And Drop Height Based on Models. (Unit: m/ft.)

Type of model	Capacity (Btu/h)	Length of piping	Maximum drop height
North America, Australia and the eu frequency conversion Split Type	<15K	25/82	10/32.8
	≥15K - <24K	30/98.4	20/65.6
	≥24K - <36K	50/164	25/82
	≥36K - ≤60K	65/213	30/98.4
Other Split Type	12K	15/49	8/26
	18K-24K	25/82	15/49
	30K-36K	30/98.4	20/65.6
	42K-60K	50/164	30/98.4

Refrigerant Piping with Twin Indoor Units

When installing multiple indoor units with a single outdoor unit, ensure that the length of the refrigerant pipe and the drop height between the indoor and outdoor units meet the requirements illustrated in the following diagram:

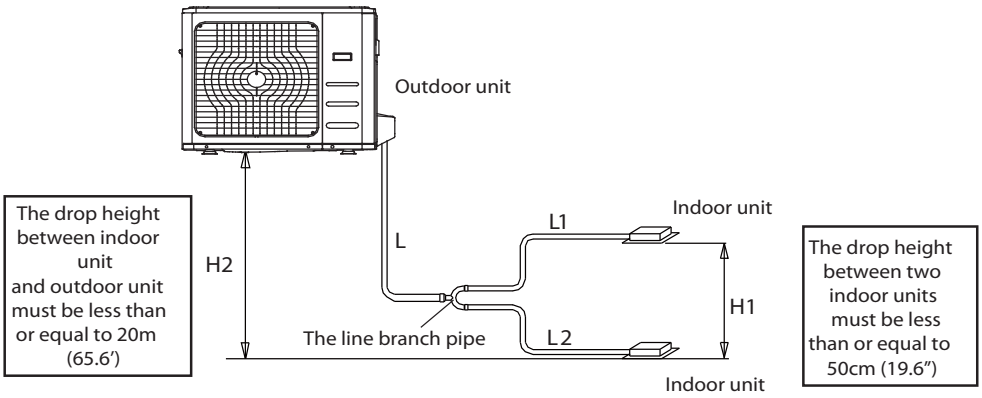

Fig. 7.1

Table 7.2

Permitted length				
Piping length	Total piping length	18K+18K	30m/98′	L+Max (L1, L2)
		24K+24K 30K+30K	50m/164′	
	(farthest distance from the line pipe branch)	15m/49′		L1, L2
	(farthest distance from the line pipe branch)	10m/32.8′		L1-L2
Drop height	Drop height between indoor and outdoor unit	20m/65.6′		H1
	Drop height between two indoor units	0.5m/1.6′		H2

Size of joint pipes for indoor unit

Table 7.3 Size of joint pipes for 410A indoor unit

Capacity of indoor unit (A)	Size of main pipe(mm)		
	Gas side	Liquid side	Available branching pipe
18K	Φ12.7(0.5″)	Φ6.35(0.25″)	CE-FQZHN-01C
24K	Φ15.9(0.626″)	Φ9.5(0.375″)	CE-FQZHN-01C
30K	Φ15.9(0.626″)	Φ9.5(0.375″)	CE-FQZHN-01C

Size of joint pipes for outdoor unit

Base on the following tables, select the diameters of the outdoor unit connective pipes. In case of the main accessory pipe large than the main pipe, take the large one for the selection.

Table 7.4 Size of joint pipes for 410A outdoor unit

Model	the size of main pipe(mm)		
	Gas side	Liquid side	The 1st branching pipe
36K	Φ15.9(0.626″)	Φ9.5(0.375″)	CE-FQZHN-01C
48K	Φ15.9(0.626″)	Φ9.5(0.375″)	CE-FQZHN-01C
60K	Φ15.9(0.626″)	Φ9.5(0.375″)	CE-FQZHN-01C

Refrigerant Piping Connection Instructions

! CAUTION

- The branching pipe must be installed horizontally. An angle of more than 10° may cause malfunction.
- **DO NOT** install the connecting pipe until both indoor and outdoor units have been installed.
- Insulate both the gas and liquid piping to prevent water leakage.

Step1: Cut pipes

When preparing refrigerant pipes, take extra care to cut and flare them properly. This will ensure efficient operation and minimize the need for future maintenance.

1. Measure the distance between the indoor and outdoor units.
2. Using a pipe cutter, cut the pipe a little longer than the measured distance.

! CAUTION

DO NOT deform pipe while cutting. Be extra careful not to damage, dent, or deform the pipe while cutting. This will drastically reduce the heating efficiency of the unit.

1. Make sure that the pipe is cut at a perfect 90° angle. Refer to Fig. 7.2 for examples of bad cuts.

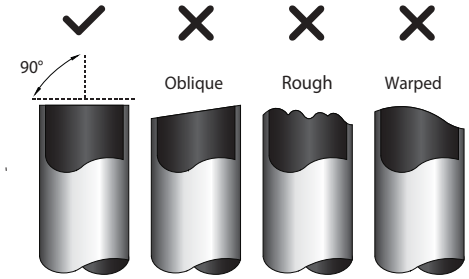

Fig. 7.2

Step2: Remove burrs.

Burrs can affect the air-tight seal of refrigerant piping connection. They must be completely removed.

1. Hold the pipe at a downward angle to prevent burrs from falling into the pipe.
2. Using a reamer or deburring tool, remove all burrs from the cut section of the pipe.

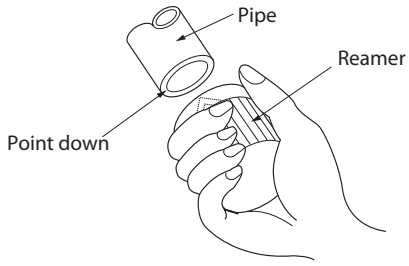

Fig. 7.3

Step 3: Flare pipe ends

Proper flaring is essential to achieve an airtight seal.

1. After removing burrs from cut pipe, seal the ends with PVC tape to prevent foreign materials from entering the pipe.
2. Sheath the pipe with insulating material.
3. Place flare nuts on both ends of pipe. Make sure they are facing in the right direction, because you can't put them on or change their direction after flaring. See Fig. 7.4

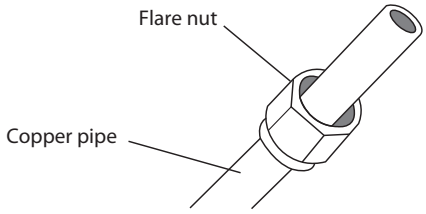

Fig. 7.4

4. Remove PVC tape from ends of pipe when ready to perform flaring work.

5. Clamp flare form on the end of the pipe. The end of the pipe must extend beyond the flare form.

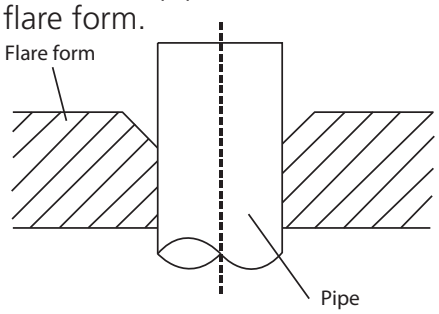

Fig. 7.5

6. Place flaring tool onto the form.
7. Turn the handle of the flaring tool clockwise until the pipe is fully flared. Flare the pipe in accordance with the dimensions shown in table 7.5.

Table 7.5: PIPING EXTENSION BEYOND FLARE FORM

Pipe gauge	Tightening torque	Flare dimension (A) (Unit: mm/Inch)		Flare shape
		Min.	Max.	
Ø 6.4	14.2-17.2 N.m (144-176 kgf.cm)	8.3/0.3	8.3/0.3	
Ø 9.5	32.7-39.9 N.m (333-407 kgf.cm)	12.4/0.48	12.4/0.48	
Ø 12.7	49.5-60.3 N.m (504-616 kgf.cm)	15.4/0.6	15.8/0.6	
Ø 15.9	61.8-75.4 N.m (630-770 kgf.cm)	18.6/0.7	19/0.74	
Ø 19.1	97.2-118.6 N.m (990-1210 kgf.cm)	22.9/0.9	23.3/0.91	
Ø 22	109.5-133.7 N.m (1117-1364 kgf.cm)	27/1.06	27.3/1.07	

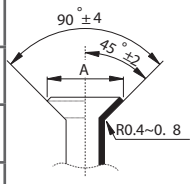

Fig. 7.6

8. Remove the flaring tool and flare form, then inspect the end of the pipe for cracks and even flaring.

Step 4: Connect pipes

Connect the copper pipes to the indoor unit first, then connect it to the outdoor unit. You should first connect the low-pressure pipe, then the high-pressure pipe.

1. When connecting the flare nuts, apply a thin coat of refrigeration oil to the flared ends of the pipes.
2. Align the center of the two pipes that you will connect.

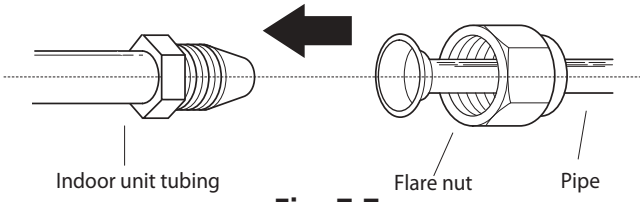

Fig. 7.7

3. Tighten the flare nut as tightly as possible by hand.
4. Using a spanner, grip the nut on the unit tubing.
5. While firmly gripping the nut, use a torque wrench to tighten the flare nut according to the torque values in table 7.5.

NOTE: Use both a spanner and a torque wrench when connecting or disconnecting pipes to/from the unit.

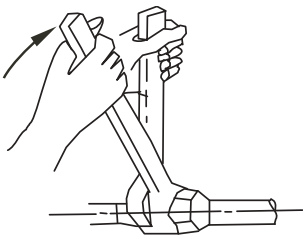

Fig. 7.8

CAUTION

- Ensure to wrap insulation around the piping. Direct contact with the bare piping may result in burns or frostbite.
- Make sure the pipe is properly connected. Over tightening may damage the bell mouth and under tightening may lead to leakage.

NOTE ON MINIMUM BEND RADIUS

Carefully bend the tubing in the middle according to the diagram below. **DO NOT** bend the tubing more than 90° or more than 3 times.

Bend the pipe with thumb

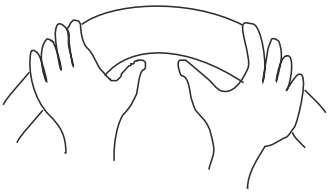

min-radius 10cm (3.9")

Fig. 7.9

6. After connecting the copper pipes to the indoor unit, wrap the power cable, signal cable and the piping together with binding tape.

NOTE: **DO NOT** intertwine signal cable with other wires. While bundling these items together, do not intertwine or cross the signal cable with any other wiring.

7. Thread this pipeline through the wall and connect it to the outdoor unit.
8. Insulate all the piping, including the valves of the outdoor unit.
9. Open the stop valves of the outdoor unit to start the flow of the refrigerant between the indoor and outdoor unit.

CAUTION

Check to make sure there is no refrigerant leak after completing the installation work. If there is a refrigerant leak, ventilate the area immediately and evacuate the system (refer to the Air Evacuation section of this manual).

Wiring

8

Safety Precautions

WARNING

- Disconnect the power supply before working on the unit.
- All wiring must be performed according to local and national regulations.
- Wiring must be done by a qualified technician. Improper connections may cause electrical malfunction, injury, or fire.
- An independent circuit and single outlet must be used for this unit.
  DO NOT plug another appliance or charger into the same outlet. If the cannot handle the load or there is a defect in the wiring, it can lead to shock, fire, and unit and property damage.
- Connect the power cable to the terminals and fasten it with a clamp. An insecure connection may cause fire.
- Make sure that all wiring is done correctly and the control board cover is properly installed. Failure to do so can cause overheating at the connection points, fire, and electrical shock.
- Ensure that main power supply connection is made through a switch that disconnects all poles, with contact gap of at least 3mm (0.118”).
- **DO NOT** modify the length of the power cord or use an extension cord.

CAUTION

- Connect the outdoor wires before connecting the indoor wires.
- Make sure you ground the unit. The grounding wire should be located away from gas pipes, water pipes, lightning rods, telephone wires or other grounding wires. Improper grounding may cause electrical shock.
- **DO NOT** connect the unit to the power source until all wiring and piping is completed.
- Make sure that you do not cross your electrical wiring with your signal wiring. This may cause distortion and interference.

To prevent distortion when the compressor starts (you can find the unit’s power information on the rating sticker):

- The unit must be connected to the main outlet. Normally, the power supply must have a impedance of 32 ohms.
- No other equipment should be connected to the same power circuit.

TAKE NOTE OF FUSE SPECIFICATIONS

The air conditioner’s printed circuit board (PCB) is designed with a fuse that provides overcurrent protection. The specifications of the fuse are printed on the circuit board, examples of such are T5A/250VAC and T10A/250VAC.

Outdoor Unit Wiring

WARNING

Before performing any electrical or wiring work, turn off the main power to the system.

1. Prepare the cable for connection
   a. You must first choose the right cable size. Be sure to use H07RN-F cables.

Table 8.1: Minimum Cross-Sectional Area of Power and Signal Cables in North America

Rated Current of Appliance (A)	AWG
≤7	18
7 - 13	16
13 - 18	14
18 - 25	12
25 - 30	10

Table 8.2: Other World Regions

Rated Current of Appliance (A)	Nominal Cross-Sectional Area (mm²)
≤ 6	0.75
6 - 10	1
10 - 16	1.5
16 - 25	2.5
25- 32	4
32 - 45	6

b. Using wire strippers, strip the rubber jacket from both ends of the signal cable to reveal approximately 15cm (5.9”) of wire.
c. Strip the insulation from the ends.
d. Using a wire crimper, crimp u-lugs on the ends.

NOTE: When connecting the wires, strictly follow the wiring diagram found inside the electrical box cover.

2. Remove the electric cover of the outdoor unit. If there is no cover on the outdoor unit, take off the bolts from the maintenance board and remove the protection board. (See Fig. 8.1, 8.2)

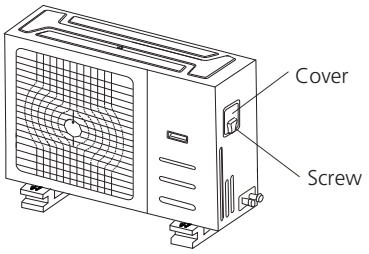

Fig. 8.1

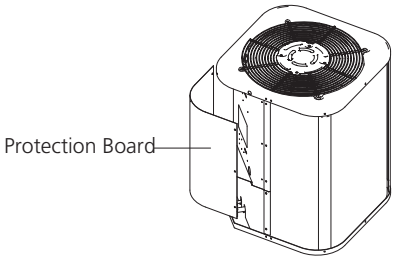

Fig. 8.2

3. Connect the u-lugs to the terminals
   Match the wire colors/labels with the labels on the terminal block, firmly screw the u-lug of each wire to its corresponding terminal.
4. Clamp down the cable with the cable clamp.
5. Insulate unused wires with electrical tape. Keep them away from any electrical or metal parts.
6. Reinstall the cover of the electric control box.

Indoor Unit Wiring

1. Prepare the cable for connection
   a. Using wire strippers, strip the rubber jacket from both ends of the signal cable to reveal about 15cm (5.9”) of the wire.
   b. Strip the insulation from the ends of the wires.
   c. Using a wire crimper, crimp the u-lugs to the ends of the wires.
2. Remove the cover of the electric control box on your indoor unit.
3. Connect the u-lugs to the terminals.
   Match the wire colors/labels with the labels on the terminal block, firmly screw the u-lug of each wire to its corresponding terminal. Refer to the Serial Number and Wiring Diagram located on the cover of the electric control box.

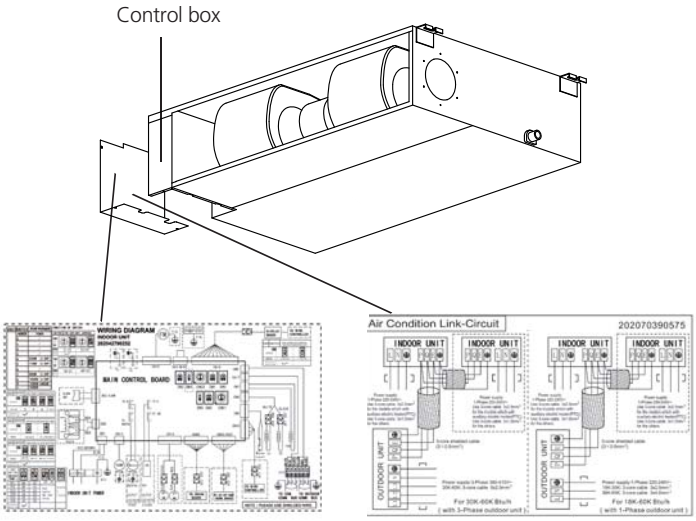

Wiring diagram Connective wiring diagram

Fig. 8.3

CAUTION

- While connecting the wires, please strictly follow the wiring diagram.
- The refrigerant circuit can become very hot. Keep the interconnection cable away from the copper tube.

4. Clamp down the cable with the cable clamp. The cable must not be loose or pull on the u-lugs.
5. Reattach the electric box cover.

Power Specifications

NOTE: Electric auxiliary heating type circuit breaker/fuse need to add more than 10 A.

Indoor Power Supply Specifications

MODEL(Btu/h)		≤18K	19K~24K	25K~36K	37K~48K	49K~60K
POWER	PHASE	1 Phase	1 Phase	1 Phase	1 Phase	1 Phase
	FREQUENCY AND VOLT	208-240V	208-240V	208-240V	208-240V	208-240V
CIRCUIT BREAKER/ FUSE(A)		25/20	32/25	50/40	70/55	70/60

MODEL(Btu/h)		≤36K	37K~60K	≤36K	37K~60K
POWER	PHASE	3 Phase	3 Phase	3 Phase	3 Phase
	FREQUENCY AND VOLT	380-420V	380-420V	208-240V	208-240V
CIRCUIT BREAKER/FUSE(A)		25/20	32/25	32/25	45/35

Outdoor Power Supply Specifications

MODEL(Btu/h)		≤18K	19K~24K	25K~36K	37K~48K	49K~60K
POWER	PHASE	1 Phase	1 Phase	1 Phase	1 Phase	1 Phase
	FREQUENCY AND VOLT	208-240V	208-240V	208-240V	208-240V	208-240V
CIRCUIT BREAKER/ FUSE(A)		25/20	32/25	50/40	70/55	70/60

MODEL(Btu/h)		≤36K	37K~60K	≤36K	37K~60K
POWER	PHASE	3 Phase	3 Phase	3 Phase	3 Phase
	FREQUENCY AND VOLT	380-420V	380-420V	208-240V	208-240V
CIRCUIT BREAKER/FUSE(A)		25/20	32/25	32/25	45/35

Independent Power Supply Specifications

MODEL(Btu/h)		≤18K	19K~24K	25K~36K	37K~48K	49K~60K
POWER (indoor)	PHASE	1 Phase	1 Phase	1 Phase	1 Phase	1 Phase
	FREQUENCY AND VOLT	208-240V	208-240V	208-240V	208-240V	208-240V
CIRCUIT BREAKER/ FUSE(A)		15/10	15/10	15/10	15/10	15/10
POWER (outdoor)	PHASE	1 Phase	1 Phase	1 Phase	1 Phase	1 Phase
	FREQUENCY AND VOLT	208-240V	208-240V	208-240V	208-240V	208-240V
CIRCUIT BREAKER/ FUSE(A)		25/20	32/25	50/40	70/55	70/60

MODEL(Btu/h)		≤36K	37K~60K	≤36K	37K~60K
POWER (indoor)	PHASE	1 Phase	1 Phase	1 Phase	1 Phase
	FREQUENCY AND VOLT	208-240V	208-240V	208-240V	208-240V
CIRCUIT BREAKER/FUSE(A)		15/10	15/10	15/10	15/10
POWER (outdoor)	PHASE	3 Phase	3 Phase	3 Phase	3 Phase
	FREQUENCY AND VOLT	380-420V	380-420V	208-240V	208-240V
CIRCUIT BREAKER/FUSE(A)		25/20	32/25	32/25	45/35

Inverter Type A/C Power Specifications

MODEL(Btu/h)		≤18K	19K~24K	25K~36K	37K~48K	49K~60K
POWER (indoor)	PHASE	1 Phase	1 Phase	1 Phase	1 Phase	1 Phase
	FREQUENCY AND VOLT	220-240V	220-240V	220-240V	220-240V	220-240V
CIRCUIT BREAKER/ FUSE(A)		15/10	15/10	15/10	15/10	15/10
POWER (outdoor)	PHASE	1 Phase	1 Phase	1 Phase	1 Phase	1 Phase
	FREQUENCY AND VOLT	208-240V	208-240V	208-240V	208-240V	208-240V
CIRCUIT BREAKER/ FUSE(A)		25/20	25/20	40/30	50/40	50/40

MODEL(Btu/h)		≤36K	37K~60K	≤36K	37K~60K
POWER (indoor)	PHASE	1 Phase	1 Phase	1 Phase	1 Phase
	FREQUENCY AND VOLT	220-240V	220-240V	220-240V	220-240V
CIRCUIT BREAKER/FUSE(A)		15/10	15/10	15/10	15/10
POWER (outdoor)	PHASE	3 Phase	3 Phase	3 Phase	3 Phase
	FREQUENCY AND VOLT	380-420V	380-420V	208-240V	208-240V
CIRCUIT BREAKER/FUSE(A)		25/20	32/25	32/25	40/30

Air Evacuation

9

Safety Precautions

CAUTION

- Use a vacuum pump with a gauge reading lower than -0.1MPa and an air discharge capacity above 40L/min.
- The outdoor unit does not need to be vacuumed. **DO NOT** open the outdoor unit's gas and liquid stop valves.
- Ensure that the Compound Meter reads -0.1MPa or below after 2 hours. If after three hours the gauge reading is still above -0.1MPa, check if there is a gas leak or water inside the pipe. If there is no leak, perform another evacuation for 1 or 2 hours.
- **DO NOT** use refrigerant gas to evacuate the system.

Evacuation Instructions

Before using a manifold gauge and a vacuum pump, read their operation manuals to make sure you know how to use them properly.

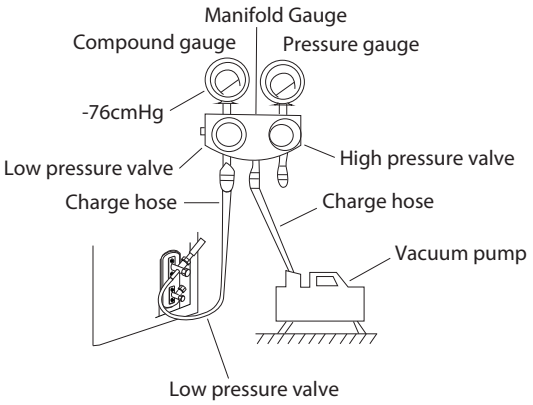

Fig. 9.1

1. Connect the manifold gauge's charge hose to the service port on the outdoor unit's low pressure valve.
2. Connect the manifold gauge's charge hose from the to the vacuum pump.
3. Open the Low Pressure side of the manifold gauge.Keep the High Pressure side closed.
4. Turn on the vacuum pump to evacuate the system.
5. Run the vacuum for at least 15 minutes, or until the Compound Meter reads -76cmHG (-1x105Pa).
6. Close the manifold gauge's Low Pressure valve and turn off the vacuum pump.
7. Wait for 5 minutes, then check that there has been no change in system pressure.

NOTE: If there is no change in system pressure, unscrew the cap from the packed valve (high pressure valve). If there is a change in system pressure, there may be a gas leak.

8. Insert hexagonal wrench into the packed valve (high pressure valve) and open the valve by turning the wrench 1/4 counterclockwise. Listen for gas to exit the system, then close the valve after 5 seconds.

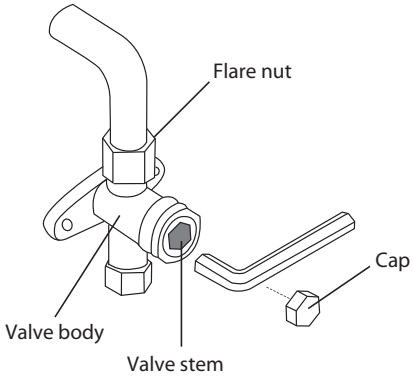

Fig. 9.2

9. Watch the Pressure Gauge for one minute to make sure that there is no change in pressure. It should read slightly higher than the atmospheric pressure.
10. Remove the charge hose from the service port.
11. Using hexagonal wrench, fully open both the high pressure and low pressure valves.

OPEN VALVE STEMS GENTLY

When opening the valve stems, turn the hexagonal wrench until it hits against the stopper. **DO NOT** try to force the valve to open further.

12. Tighten valve caps by hand, then tighten it using the proper tool.

Note On Adding Refrigerant

CAUTION

- Refrigerant charging must be performed after wiring, vacuuming, and the leak testing.
- **DO NOT** exceed the maximum allowable quantity of refrigerant or overcharge the system. Doing so can damage the unit or impact it's functioning.
- Charging with unsuitable substances may cause explosions or accidents. Ensure that the appropriate refrigerant is used.
- Refrigerant containers must be opened slowly. Always use protective gear when charging the system.
- **DO NOT** mix refrigerants types.

Some systems require additional charging depending on pipe lengths. The standard pipe length varies according to local regulations. For example, in North America, the standard pipe length is 7.5m (25') In other areas, the standard pipe length is 5m (16'). The additional refrigerant to be charged can be calculated using the following formula:

	Liquid Side Diameter		
	ϕ6.35(1/4")	ϕ9.52(3/8")	ϕ12.7(1/2")
R22 (orifice tube in the indoor unit):	(Total pipe length - standard pipe length)x 30g (0.32oZ)/m(ft)	(Total pipe length - standard pipe length)x 65g(0.69oZ)/m(ft)	(Total pipe length - standard pipe length)x 115g(1.23oZ)/m(ft)
R22 (orifice tube in the outdoor unit):	(Total pipe length - standard pipe length) x15g(0.16oZ)/m(ft)	(Total pipe length - standard pipe length) x30(0.32oZ)/m(ft)	(Total pipe length - standard pipe length) x60g(0.64oZ)/m(ft)
R410A: (orifice tube in the indoor unit):	(Total pipe length - standard pipe length) x30g(0.32oZ)/m(ft)	(Total pipe length - standard pipe length) x65g(0.69oZ)/m(ft)	(Total pipe length - standard pipe length) x115g(1.23oZ)/m(ft)
R410A: (orifice tube in the outdoor unit):	(Total pipe length - standard pipe length) x15g(0.16oZ)/m(ft)	(Total pipe length - standard pipe length) x30g(0.32oZ)/m(ft)	(Total pipe length - standard pipe length) x65g(0.69oZ)/m(ft)

Test Run

10

Before Test Run

A test run must be performed after the entire system has been completely installed. Confirm the following points before performing the test:

a) Indoor and outdoor units are properly installed.
b) Piping and wiring are properly connected.
c) No obstacles near the inlet and outlet of the unit that might cause poor performance or product malfunction.
d) Refrigeration system does not leak.
e) Drainage system is unimpeded and draining to a safe location.
f) Heating insulation is properly installed.
g) Grounding wires are properly connected.
h) Length of the piping and additional refrigerant stow capacity have been recorded.
i) Power voltage is the correct voltage for the air conditioner.

CAUTION

Failure to perform the test run may result in unit damage, property damage or personal injury.

Test Run Instructions

1. Open both the liquid and gas stop valves.
2. Turn on the main power switch and allow the unit to warm up.
3. Set the air conditioner to COOL mode.
4. For the Indoor Unit
   a. Ensure the remote control and its buttons work properly.
   b. Ensure the louvers move properly and can be changed using the remote control.
   c. Double check to see if the room temperature is registered correctly.
   d. Ensure the indicators on the remote control and the display panel on the indoor unit work properly.
   e. Ensure the manual buttons on the indoor unit works properly.
   f. Check to see that the drainage system is unimpeded and draining smoothly.
   g. Ensure there is no vibration or abnormal noise during operation.
5. For the Outdoor Unit
   a. Check to see if the refrigeration system is leaking.
   b. Make sure there is no vibration or abnormal noise during operation.
   c. Ensure the wind, noise, and water generated by the unit do not disturb your neighbors or pose a safety hazard.
6. Drainage Test
   a. Ensure the drainpipe flows smoothly. New buildings should perform this test before finishing the ceiling.
   b. Remove the test cover. Add 2,000ml of water to the tank through the attached tube.
   c. Turn on the main power switch and run the air conditioner in COOL mode.
   d. Listen to the sound of the drain pump to see if it makes any unusual noises.
   e. Check to see that the water is discharged. It may take up to one minute before the unit begins to drain depending on the drainpipe.
   f. Make sure that there are no leaks in any of the piping.
   g. Stop the air conditioner. Turn off the main power switch and reinstall the test cover.

NOTE: If the unit malfunctions or does not operate according to your expectations, please refer to the Troubleshooting section of the Owner's Manual before calling customer service.

The design and specifications are subject to change without prior notice for product improvement. Consult with the sales agency or manufacturer for details.

16123000A13518
5/2017