Goodman®

INSTALLATION MANUAL

Four-way Cassette Type

MST123E20ACAA

Thank you very much for purchasing our air conditioner,
Before using your air conditioner, please read this manual carefully and keep it for future reference.

- If used as MULTI unit, please refer to the Installation & operation manuals packed with outdoor unit.

CONTENTS

Page

PRECAUTIONS.....1
INSTALLATION INFORMATION.....2
ACCESSORIES.....3
INDOOR UNIT INSTALLATION.....4
OUTDOOR UNIT INSTALLATION.....7
INSTALL THE REFRIGERANT PIPE.....9
CONNECT THE DRAIN PIPE.....12
ELECTRIC WIRING WORK.....13
INSTALLATION OF THE DECORATION PANEL.....15
TEST OPERATION.....16

PRECAUTIONS

- Keep this manual where the operator can easily find them.
- Read this manual attentively before starting up the units.
- For safety reason the operator must read the following cautions carefully.
- Installation must be performed in accordance with the requirement of NEC and CEC by authorized personnel only.

The safty precautions listed here are divided into two categories.

WARNING

If you do not follow these instrutions exactly, the unit may cause property damage, personal injury or loss of life.

CAUTION

If you do not follow these instrutions exactly, the unit may cause minor or moderate property damage, personal injury.

After completing the installation, make sure that the unit operates properly during the start-up operation. Please instruct the customer on how to operate the unit and keep it maintained.Also, inform customers that they should store this installation manual along with the owner's manual for future reference.

WARNING

Be sure only trained and qualified service personnel to install, repair or service the equipment.

Improper installation, repair, and maintenance may result in electric shocks, short-circuit, leaks, fire or other damage to the equipment.

Install according to this installation instructions strictly.
If installation is defective, it will cause water leakage, electrical shock and fire.

When installing the unit in a small room, take measures against to keep refrigerant concentration from exceeding allowable safety limits in the event of refrigerant leakage. Contact the place of purchase for more information. Excessive refrigerant in a closed ambient can lead to oxygen deficiency.

Use the attached accessories parts and specified parts for installation.
otherwise, it will cause the set to fall, water leakage, electrical shock and fire.

Install at a strong and firm location which is able to withstand the set' s weight.
If the strength is not enough or installation is not properly done, the set will drop to cause injury.

The appliance must be installed 2.5m / 8.2ft above floor.

The appliance shall not be installed in the laundry.

Before obtaining access to terminals, all supply circuits must be disconnected.

The appliance must be positioned so that the plug is accessible.

The enclosure of the appliance shall be marked by word, or by symbols, with the direction of the fluid flow.

For electrical work, follow the local national wiring standard, regulation and this installation instructions. An independent circuit and single outlet must be used.
If electrical circuit capacity is not enough or defect in electrical work, it will cause electrical shock or fire.

Use the specified cable and connect tightly and clamp the cable so that no external force will be acted on the terminal.
If connection or fixing is not perfect, it will cause heat-up or fire at the connection.

Wiring routing must be properly arranged so that control board cover is fixed properly.
If control board cover is not fixed perfectly, it will cause heat-up at connection point of terminal, fire or electrical shock.

If the supply cord is damaged, it must be replaced by the manufacture or its service agent or a similarly qualified person in order to avoid a hazard.

An all-pole disconnection switch having a contact separation of at least 3mm in all poles should be connected in fixed wiring.

When carrying out piping connection, take care not to let air substances go into refrigeration cycle.
Otherwise, it will cause lower capacity, abnormal high pressure in the refrigeration cycle, explosion and injury.

Do not modify the length of the power supply cord or use of extension cord, and do not share the single outlet with other electrical appliances.
Otherwise, it will cause fire or electrical shock.

If the refrigerant leaks during installation, ventilate the area immediately.
Toxic gas may be produced if the refrigerant comes into the place contacting with fire.

The temperature of refrigerant circuit will be high, please keep the interconnection cable away from the copper tube.

After completing the installation work, check that the refrigerant does not leak.
Toxic gas may be produced if the refrigerant leaks into the room and comes into contact with a source of fire, such as a fan heater, stove or cooker.

CAUTION

Ground the air conditioner.
Do not connect the ground wire to gas or water pipes, lightning rod or a telephone ground wire.Inappropriate grounding may result in electric shocks.

Be sure to install an earth leakage breaker.
Failure to install an earth leakage breaker may result in electric shocks.

Connect the outdoor unit wires , then connect the indoor unit wires.
You are not allowed to connect the air conditioner with the power supply until the wiring and piping is done.

While following the instructions in this installation manual, install drain piping in order to ensure proper drainage and insulate piping in order to prevent condensation.
Improper drain piping may result in water leakage and property damage.

Install the indoor and outdoor units, power supply wiring and connecting wires should be at least 1 meter away from televisions or radios in order to prevent image interference or noise.
Depending on the radio waves, a distance of 1 meter may not be sufficient enough to eliminate the noise.

The appliance is not intended for use by young children or infirm persons without supervision.

Don't install the air conditioner in the following circumstance:

- There is petrolatum existing.
- There is salty air surrounding (near the coast).
- There is caustic gas (the sulfide, for example) existing in the air (near a hot spring).
- The Volt vibrates violently (in the factories).
- In buses or cabinets.
- In kitchen where it is full of oil gas.
- There is strong electromagnetic wave existing.
- There are inflammable materials or gas.
- There is acid or alkaline liquid evaporating.
- Other special conditions.

The appliance shall be installed in accordance with national wiring regulations.

Do not operate your air conditioner in a wet room such as a bathroom or laundry room.

An all-pole disconnection device which has at least 3mm / 0.1in clearances in all poles , and have a leakage current that may exceed 10mA, the residual current device (RCD) having a rated residual operating current not exceeding 30mA, and disconnection must be incorporated in the fixed wiring in accordance with the wiring rules.

INSTALLATION INFORMATION

- To install properly, please read this "installation manual" at first.
- The air conditioner must be installed by qualified persons.
- When installing the indoor unit or its tubing, please follow this manual as strictly as possible.
- If the air conditioner is installed on a metal part of the building, it must be electrically insulated according to the relevant standards to electrical appliances.
- When all the installation work is finished, please turn on the power only after a thorough check.
- Regret for no further announcement if there is any change of this manual caused by product improvement.

INSTALLATION ORDER

- Indoor unit installation;
- Outdoor unit installation;
- Install the refrigerant pipe;
- Connect the drain pipe ;
- Electric wiring work;
- Installation of the decoration panel;
- Test operation.

ACCESSORIES

Check if the following accessories are included with your unit.

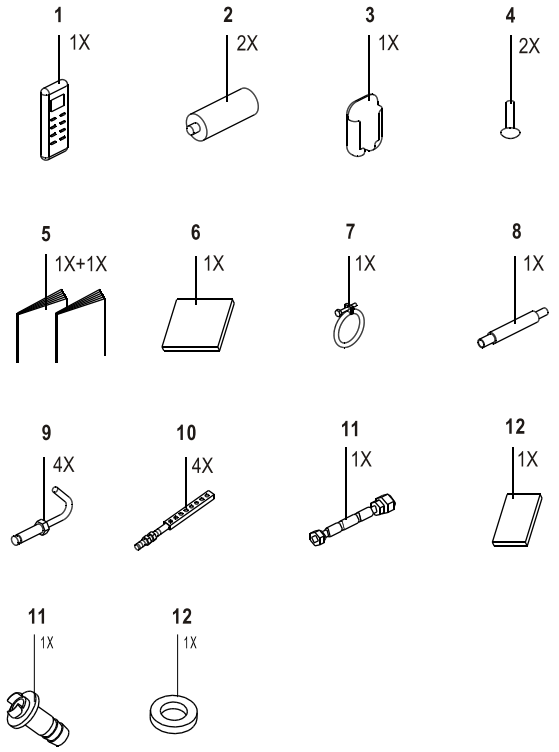

1 Remote controller

2 Batteries

3 Remote controller holder (on some models)

4 Tapping screws (M3×10mm) (on some models)

5 Installation and owner's manual

6 Paper pattern for installation (on some models)

7 Metal champ (on some models)

8 Drain hose (on some models)

9 Expansible hooks (on some models)

10 Installation hooks (on some models)

11 Throttle (on some models)

12 Anti-shock rubber (on some models)

13 Drain plug(only heat pump models)(with the outdoor unit)

14 Seal ring(only heat pump models)(with the outdoor unit)

Optional accessories

- This indoor unit requires installation of an optional decoration panel.

For the following items, take special care during construction and check after installation is finished

Tick √ when checked	
☐	Is the indoor unit fixed firmly? The unit may drop,vibrate or make noise.
☐	Is the gas leak test finished? It may result in insufficient cooling or heating.
☐	Is the unit fully insulated? Condensate water may drip.
☐	Does drainage flow smoothly? Condensate water may drip.
☐	Does the power supply voltage correspond to that shown on the name plate? The unit may malfunction or components may burn out.
☐	Are wiring and piping correct? The unit may malfunction or components may burn out.
☐	Is the unit safely grounded? Dangerous at electric leakage.
☐	Is the wiring size according to specifications? The unit may malfunction or components may burn out.
☐	Is nothing blocking the air outlet or inlet of either the indoor or outdoor units? It may result in insufficient cooling or heating.
☐	Are refrigerant piping length and additional refrigerant charge noted down? The refrigerant charge in the system might not be clear.

NOTE

All the pictures in this manual are for explanation purpose only. There may be slightly different from the air conditioner you purchased (depend on model). The actual shape shall prevail.

1. INDOOR UNIT INSTALLATION

1.1 Selecting installation site

When the conditions in the ceiling are exceeding 30°C / 86°F and a relative humidity of 80%, or when fresh air is inducted into the ceiling, an additional insulation is required (minimum 10 mm / 0.4in thickness, polyethylene foam).

1) Select an installation site where the following conditions are fulfilled and that meets your customer's approval.

- Where optimum air distribution can be ensured.
- Where nothing blocks air passage.
- Where condensate water can be properly drained.
- Where the false ceiling is not noticeably on an incline.
- Where sufficient clearance for maintenance and service can be ensured.
- Where there is no risk of flammable gas leaking.
- The equipment is not intended for use in a potentially explosive atmosphere.
- Where piping between indoor and outdoor units is possible within the allowable limit.(Refer to the installation manual of the outdoor unit.)
- Keep indoor unit,outdoor unit,inter unit wiring and remote controller wiring at least 1 meter away from televisions and radios.This is to prevent image interference and noise in those electrical appliances.(Noise may be generated depending on the conditions under which the electric wave is generated,even if 1 meter is kept.)
- When installing the wireless remote controller kit,the distance between wireless remote controller and indoor unit might be shorter if there are fluorescent lights who are electrically started in the room.The indoor unit must be installed as far as possible away from fluorescent lights.

2) Ceiling height

Install this unit where the height of bottom panel is more than 2.5m / 8.2ft so that the user cannot easily touch.

3) Use installation hooks for installation.Check whether the ceiling is strong enough to support the weight of the indoor unit.If there is a risk,reinforce the ceiling before installing the unit.

Space required for installation see the figure below (⇧ :air flow direction)

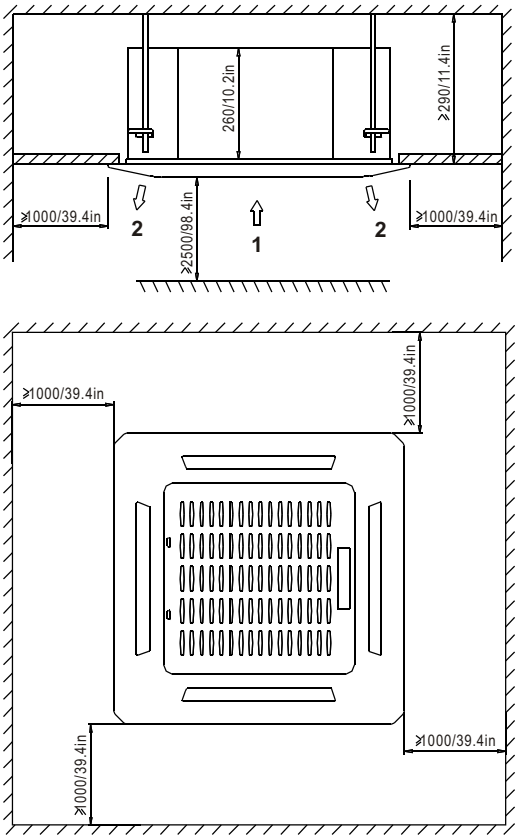

Unit: mm

1 Air inlet
2 Air outlet

DANGER

Do not install the unit in an area where flammable materials are present due to risk of explosion resulting in serious injury or death.

WARNING

If the basis underneath the unit is not strong enough to support the weight of the unit, the unit could be fall out of place and cause serious injury.

1.2 Preparations before installation

1) Relation of ceiling opening to unit and suspension bolt position.

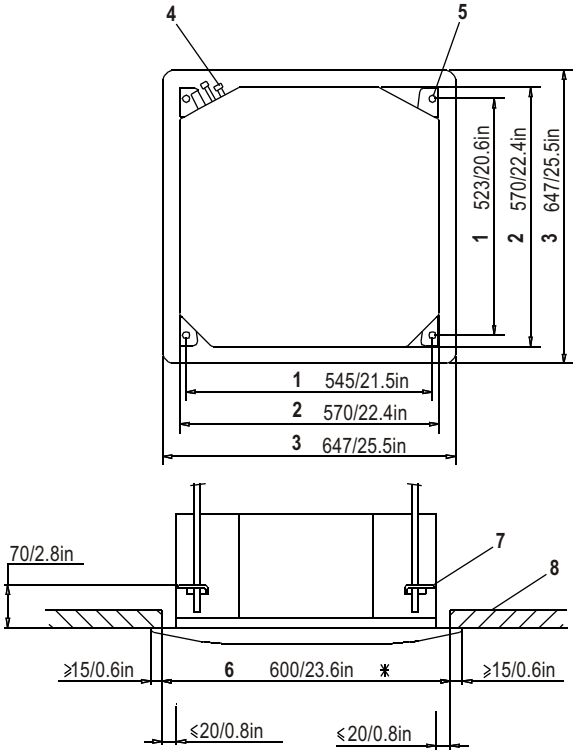

Unit: mm

1 Installation hook pitch dimensions
2 Indoor unit dimensions
3 decoration panel dimensions
4 Refrigerant piping
5 Installation hook (×4)
6 Ceiling opening dimensions
7 Hanger bracket
8 False ceiling

■ **Adjust the position to ensure the gaps between the indoor unit and the four sides of false ceiling are even. The indoor unit's lower part should sink into the false ceiling for 24mm / 0.9in.**

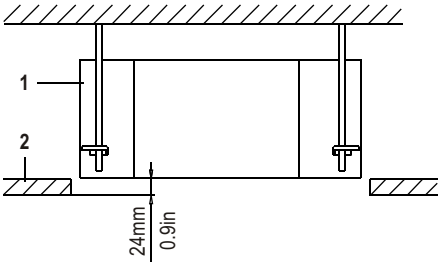

1 Indoor unit
2 False ceiling

NOTE: Installation is possible with a ceiling dimension of 600 mm / 23.6in(marked with *) . However,to achieve a ceiling-panel overlapping dimension of 15 mm / 0.6in, the spacing between the ceiling and the unit should be 20 mm / 0.8in or less.If the spacing between ceiling and the unit is over 20 mm / 0.8in, attach sealing material in the part or recover the ceiling.

2) Make the ceiling opening needed for installation where applicable.(For existing ceilings.)

- Create the ceiling opening required for installation.From the side of the opening to the casing outlet, implement the refrigerant and drain piping and wiring for remote controller (unnecessary for wireless type). Refer to each piping or wiring section.
- After making an opening in the ceiling, it may be necessary to reinforce ceiling beams to keep the ceiling level and to prevent it from vibrating. Consult the builder for details.

3) Install the installation hooks. (Use either a M8 or M10 size bolt.)

Use expansible hooks, sunken anchors or other field supplied parts to reinforce the ceiling in order to bear the weight of the unit. Adjust clearance from the ceiling before proceeding further. Installation example see figure below.

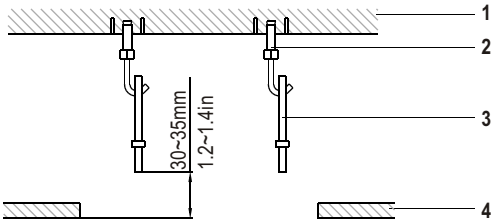

1 Ceiling slab
2 Expansible hook (optional)
3 Installation hook (optional)
4 False ceiling

NOTE ■ For other installation than standard installation, contact your dealer for details.

1.3 Install the indoor unit

When installing optional accessories, read also the installation manual of the optional accessories. Depending on the field conditions, it may be easier to install optional accessories before the indoor unit is installed (except for the decoration panel). However, for existing ceiling, install fresh air inlet component kit and branch duct before installing the unit.

1) Install the indoor unit temporarily.

- Attach the hanger bracket to the suspension bolt. Be sure to fix it securely by using a nut and washer from the upper and lower sides of the hanger bracket.
- Securing the hanger bracket see figure below.

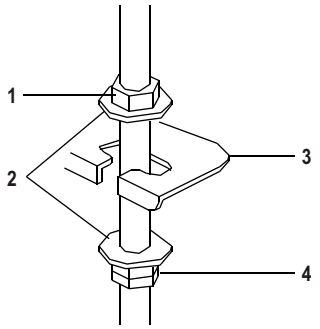

1 Nut (field supply)
2 Washer (field supply)
3 Hanger bracket
4 Double nuts (field supply,tighten)

2) Fix the paper pattern for installation. (For new ceilings only)

- The paper pattern for installation corresponds with the measurements of the ceiling opening. Consult the builder for details.
- The centre of the ceiling opening is indicated on the paper pattern for installation.
- After removing the packaging material from the paper patten for installation, attach the paper pattern for installation to the unit with the attached screws as shown in figure below.

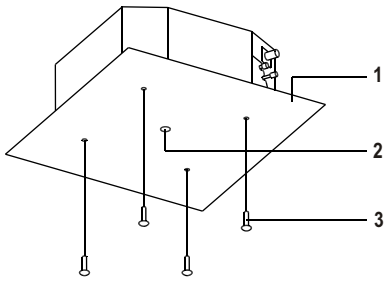

1 Paper pattern for installation(on some models)
2 Center of the ceiling openiing
3 Screws(supplied with the decoration panel)

3) Adjust the unit to the right position for installation.

(Refer to the chapter "Preparations before installation" on page 5.)

4) Check if the unit is horizontally levelled.

- Do not install the unit tilted. The indoor unit is equipped with a built-in drain pump and float switch. (If the unit is tilted against the direction of the condensate flow (the drain piping side is raised), the float switch may malfunction and cause water to drip.)
- Check if the unit is levelled at all four corners with a water level or a water-filled vinyl tube as shown in figure below.

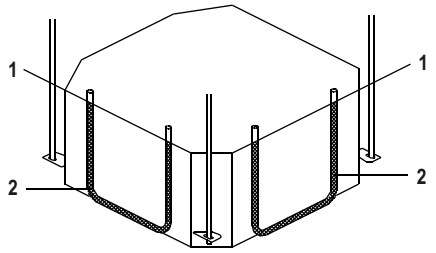

1 Water level
2 Vinyl tube

5) Remove the paper pattern for installation. (For new ceiling only).

2. OUTDOOR UNIT INSTALLATION

2.1 Precautions for selecting the location

1) Choose a place solid enough to bear the weight and vibration of the unit, where the operation noise will not be amplified.
2) Choose a location where the hot air discharged from the unit or the operation noise will not cause a nuisance to the neighbours of the user.
3) Avoid places near a bedroom and the like, so that the operation noise will cause no trouble.
4) There must be sufficient spaces for carrying the unit into and out of the site.
5) There must be sufficient space for air passage and no obstructions around the air inlet and the air outlet.
6) The site must be free from the possibility of flammable gas leakage in a nearby place.
7) Install units, power cords and inter-unit wire at least 3m away from television and radio sets. This is to prevent interference to images and sounds. (Noises may be heard even if they are more than 3m away depending on radio wave conditions.)
8) In coastal areas or other places with salty atmosphere of sulfate gas, corrosion may shorten the life of the air conditioner.
9) Since drain flows out of the outdoor unit, do not place under the unit anything which must be kept away from moisture.

NOTE: Cannot be installed hanging from ceiling or stacked.

CAUTION

When operating the air conditioner in a low outdoor ambient temperature, be sure to follow the instructions described below.

- To prevent exposure to wind, install the outdoor unit with its suction side facing the wall.
- Never install the outdoor unit at a site where the suction side may be exposed directly to wind.
- To prevent exposure to wind, it is recommended to install a baffle plate on the air discharge side of the outdoor unit.
- In heavy snowfall areas, select an installation site where the snow will not affect the unit.

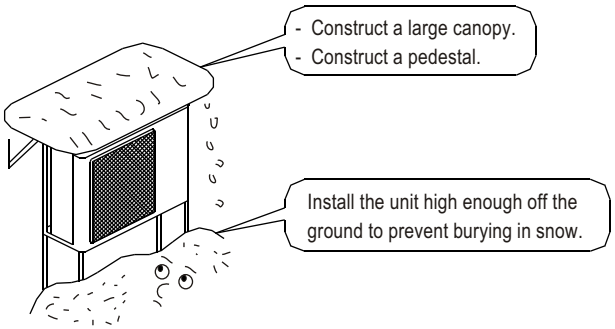

2.2 Figure of body size

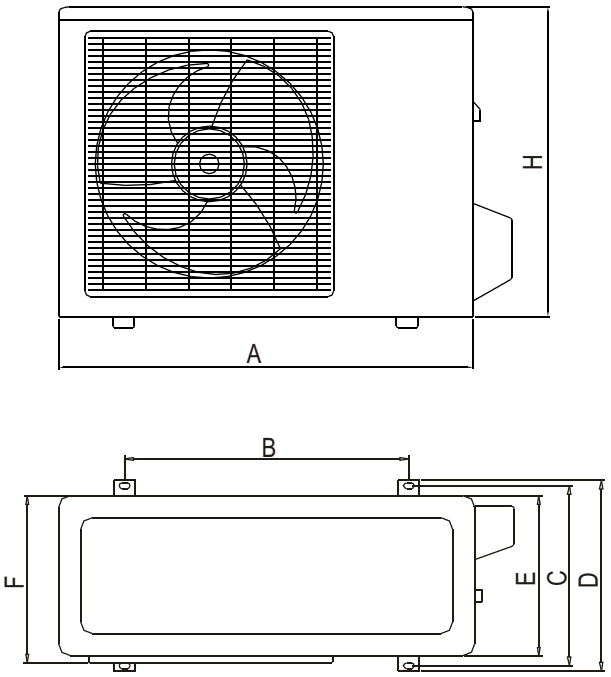

Unit:mm

MODEL	A	B	C	D	E	F	H
9K~18K	780	548	266	300	241	250	540
	760	530	290	315	270	285	590
	810	549	325	350	305	310	558
	845	560	335	360	312	320	700

(in=mm/25.4)

2.3 Installation guidelines

- Where a wall or other obstacle is in the path of outdoor unit's inlet or outlet airflow, follow the installation guidelines below.
- For any of the below installation patterns, the wall height on the outlet side should be 1200mm/47.2in or less.

Wall facing one side

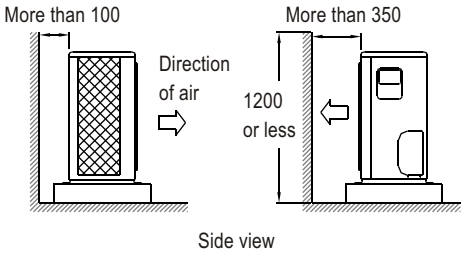

Walls facing two sides

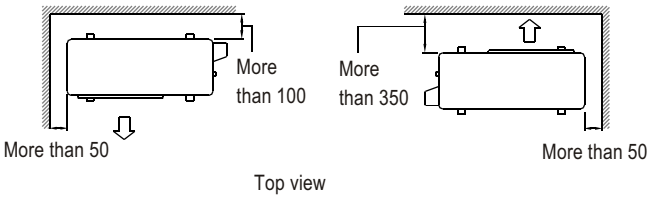

Walls facing three sides

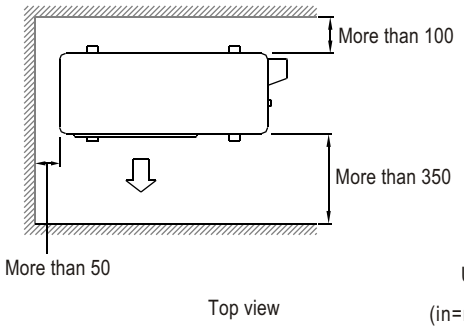

Unit:mm

(in=mm/25.4)

2.4 Outdoor unit installation

1) Installing outdoor unit

- When installing the outdoor unit, refer to "Precautions for selecting the location" .
- Check the strength and level of the installation ground so that the unit will not cause any operating vibration or noise after installed.
- Fix the unit securely by means of the foundation bolts. (Prepare 4 sets of M8 or M10 foundation bolts, nuts and washers each which are available on the market.)

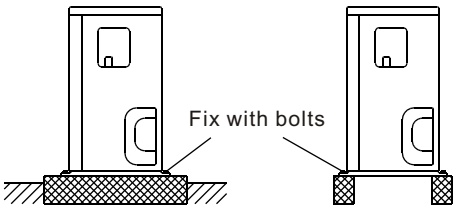

2) Drain work

- If drain work is necessary, follow the procedures below.
- Use drain plug for drainage.
- If the drain port is covered by a mounting base or floor surface, place additional foot bases of at least 30mm/1.2in in height under the outdoor unit's feet.
- In cold areas, do not use a drain hose with the outdoor unit. (Otherwise, drain water may freeze, impairing heating performance.)

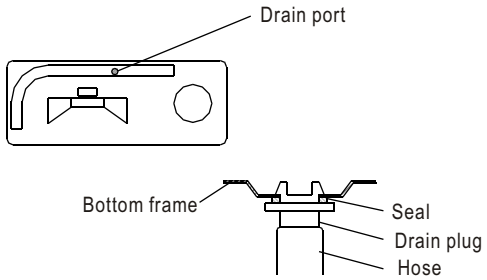

3 INSTALL THE REFRIGERANT PIPE

All field piping must be provided by a licensed refrigeration technician and must comply with the relevant local and national codes.

Precautions

- Execute heat insulation work completely on both sides of the gas piping and liquid piping. Otherwise, this can sometimes result in water leakage.
  (When using a heat pump, the temperature of the gas piping can reach up to approximately 120℃/248°F. Use insulation which is sufficiently resistant.)
- Also, in cases where the temperature and humidity of the refrigerant piping sections might exceed 30℃/86°F or Rh80%, reinforce the refrigerant insulation(20mm/0.8in or thicker). Condensation may form on the surface of the insulating material.
- Before rigging tubes, check which type of refrigerant is used.
- Use a pipe cutter and flare suitable for used refrigerant.
- Only use annealed material for flare conncetions.
- Do not mix anything other than the specified refrigerant, such as air, etc.., Inside the refrigerant circuit.
- If the refrigerant gas leaks during the work, ventilate the area. A toxic gas is emitted by the refrigerant gas being exposed to a fire.
- Make sure there is no refrigerant gas leak. A toxic gas may be released by the refrigerant gas leaking indoor and being exposed to flames from an area heater, cooking stove, etc.
- Refer to the table below for the dimensions of flare nuts spaces and the appropriate tightening torque. (Overtightening may damage the flare and cause leaks.)

Pipe gauge (mm)	Tightening torque	Flare dimension A(mm)	Flare shape
Ø6.35(1/4 in)	15~16 N. m (153~163 kgf.cm)	8.3~8.7 0.327~0.343in	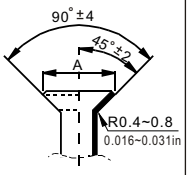
Ø9.52(3/8in)	25~26 N. m (255~265 kgf.cm)	12.0~12.4 0.472~0.488in	
Ø12.7(1/2in)	35~36 N. m (357~367 kgf.cm)	15.4~15.8 0.606~0.622in	
Ø15.9(5/8in)	45~47 N. m (459~480 kgf.cm)	18.6~19.0 0.732~0.748in	

- Check whether the height drop between the indoor unit and outdoor unit, and the length of refrigerant pipe meet the following requirements:

The type of models	Capacity (Btu/h)	Max.allowable piping length	Max.allowable piping height
T1 condition Split type air conditioner	9K ~12K	15m/49.2ft	8m/26.2ft
	18K	25m/82ft	15m/49.2ft
R410A inverter Split type air conditioner	9K ~12K	25m/82ft	10m/32.8ft
	18K	30m/98.4ft	20m/65.6ft
T3 condition (outdoor unit down)	9K ~12K	25m/82ft	10m/32.8ft
	18K	30m/98.4ft	15m/49.2ft
T3 condition (outdoor unit up)	9K ~12K	25m/82ft	15m/49.2ft
	18K	30m/98.4ft	20m/65.6ft

3.1 Flaring the pipe end

1) Cut the pipe end with a pipe cutter.
2) Remove burrs with the cut surface facing downward so that the chips do not enter the pipe.

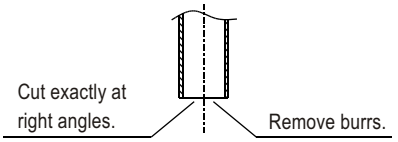

3) Put the flare nut on the pipe.
4) Flare the pipe.

(in=mm/25.4)

Outer diam. (mm)	A(mm)	
	Max.	Min.
Ø6.35(1/4 in)	1.3	0.7
Ø9.52(3/8in)	1.6	1.0
Ø12.7(1/2in)	1.8	1.0
Ø15.9(5/8in)	2.2	2.0

Set exactly at the position shown below.

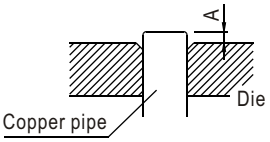

5) Check that the flaring is properly made.

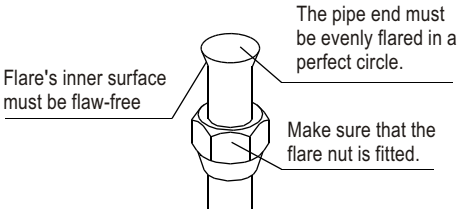

3.2 Refrigerant piping

- Coat the flare both inside and ouside with ether oil or ester oil .

Coat here with ether oil or ester oil

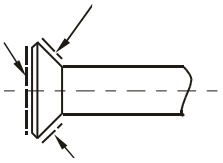

- Align the centres of both flares and tighten the flare nuts 3 or 4 turns by hand. Then tighten them fully with the torque wrenches.

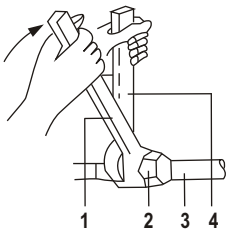

1 Torque wrench
2 Flare nut
3 Piping union
4 Spanner

3.3 Installation of the throttle. (For some models)

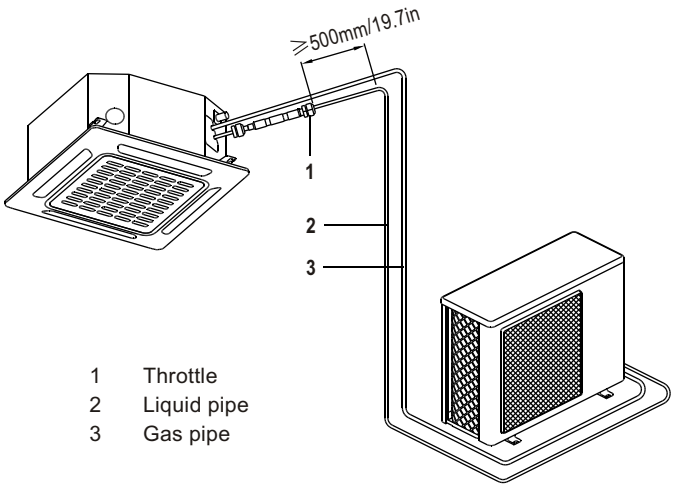

1 Throttle
2 Liquid pipe
3 Gas pipe

■ **Precautions**

- For ensuring throttled efficiency, please mount the throttle as horizontally as possible.

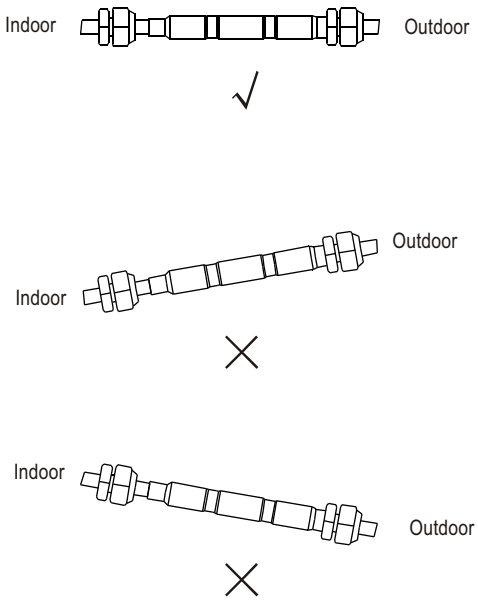

- Wrap the supplied anti-shock rubber at external of the throttle for denoise.

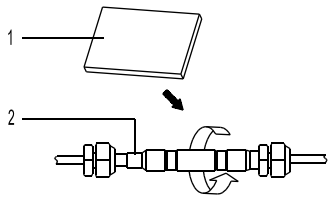

1 Anti-shock rubber
2 Throttle

3.4 Purging air and checking gas leakage

- When piping work is completed, it is necessary to purge the air and check for gas leakage.

WARNING

- Do not mix any substance other than the specified refrigerant into the refrigeration cycle.
- When refrigerant gas leaks occur, ventilate the room as soon as possible.
- The specified refrigerant should always be recovered and never be released directly into the environment.
- Use a vacuum pump for the specified refrigerant. Using the same vacuum pump for different refrigerants may damage the vacuum pump or the unit.

- If using additional refrigerant, perform air purging from the refrigerant pipes and indoor unit using a vacuum pump, than charge additional refrigerant.
- Use a hexagonal wrench(4mm/0.2in) to operate the stop valve rod.
- All refrigerant pipe joints should be tightened with a torque wrench at the specified tightening torque.

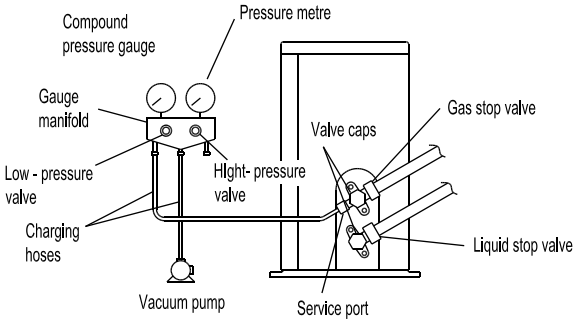

1) Connect projection side of charging hose (which comes from gauge manifold) to gas stop valve's service port.
2) Full open gauge manifold's low-pressure valve (Lo) and completely close its high-pressure valve (Hi)
   (High-pressure valve subsequently requires no operation.)
3) Do vacuum pumping and make sure that the compound pressure gauge reads -0.1MPa (-76cmHg).*1
4) Close gauge manifold's low-pressure valve (Lo) and sop vacuum pump.
   (Keep this state for a few minutes to make sure that the compound pressure gauge pointer does not swing back.)*2
5) Remove caps from liquid stop valve and gas stop valve.
6) Turn the liquid stop valve's rod 90 degrees counterclockwise with a hexagonal wrench to open valve.
   Close it after 5 seconds, and check for gas leakage.
   Using soapy water, check for gas leakage from indoor unit's flare and outdoor unit's flare and valve rods.
   After the check is complete, wipe all soapy water off.
7) Disconnect charging hose from gas stop valve's service port then fully open liquid and gas stop valves.
   (Do not attempt to turn valve rod byond its stop.)
8) Tighten valve caps and service port caps for the liquid and gas stop valves with a torque wrench at the specified torques.

*1. Pipe length vs. Vacuum pump run time

Pipe length	Up to 15m/49.2ft	More than 15m/49.2ft
Run time	Not less than 10 min	Not less than 15min

*2. If the compound pressure gauge pointer swings back, refrigerant may have water content or a loose pipe joint may exists. Check all pipe joints and retighten nuts as needed, then repeat steps 2) through 4).

3.5 Additional refrigerant charge

CAUTION

- Refrigerant may only be charged after performing the leak test and the vacuum pumping.
- Check the type of refrigerant to be used on the machine nameplate. Charging with an unsuitable refrigerant may cause explosions and accidents, so always ensure that the appropriate refrigerant is charged.
- Refrigerant containers shall be opened slowly.

- The outdoor unit is factory charged with refrigerant. Calculate the added refrigerant according to the diameter and the length of the liquid pipe of the outdoor unit/indoor unit connection.

Pipe length and refrigerant amount:

Connective pipe length	Air purging method	Additional amount of refrigerant to be charged
Less than 7.5m	Use vacuum pump.	_____
More than 7.5m	Use vacuum pump.	Liquid side:Φ 6.35mm / 1/4in R410A: (Pipe length-7.5(25))x15g/m(0.16oz/ft)
		Liquid side:Φ 9.52mm / 3/8in: R410A: (Pipe length-7.5(25))x30g/m(0.32oz/ft)

- Be sure to add the proper amount of additional refrigerant. Failure to do so may result in reduced performance.

3.6 Refrigerant pipig work

1) Caution on the pipe handling

- Protect the open end of the pipe against dust and moisture.
- All pipe bends should be as gentle as possible. Use a pipe bender for bending.

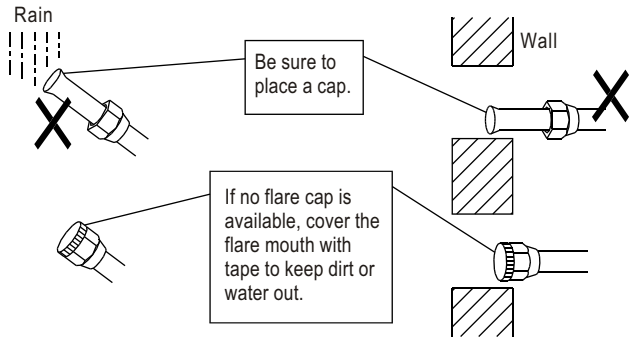

2) Be sure to insulate both the gas and liquid piping. Use separate thermal insulation pipes for gas and liquid refrigerant pipes. See the figure below.

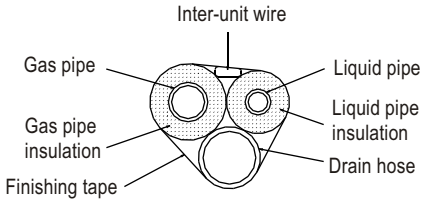

3) Finally, insulate as shown in the figure below.

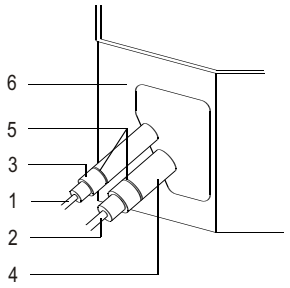

1 Liquid pipe
2 Gas pipe
3 Insulation for liquid pipe fitting
4 Insulation for gas pipe fitting
5 Clamps (use 2 clamps per insulation)
6 Indoor unit

Piping insulation procedure

Gas piping

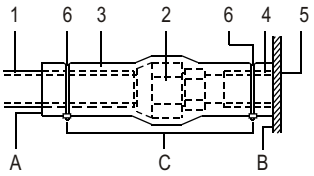

Liquid piping

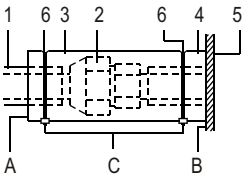

1 Piping insulation material(field supply)
2 Flare nut connection
3 Insulation for fitting (field supply)
4 Piping insulation material (main unit)
5 Indoor unit
6 Clamp (field supply)

A Turn seams up
B Attach to base
C Tighten the part other than the piping insulation material

- For local insulation, be sure to insulate local piping all the way into the pipe connections inside the unit. Exposed piping may cause condensation or may cause burns when touched.
- Make sure that no oil remains on plastic parts of the decoration panel (optional equipment). Oil may cause degradation and damage to plastic parts.

4 CONNECT THE DRAIN PIPE

4.1 Installation of drain piping

Install the drain piping as shown in figure below and take measures against condensation. Improperly rigged piping could lead to leaks and eventually wet furniture and belongings.

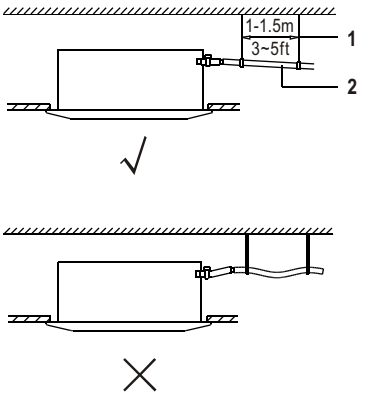

1 Hanging bar
2 ⩾1/100 gradient

4.2 Install the drain pipes.

- Keep piping as short as possible and slope it downwards at a gradient of at least 1/100 so that air may not remain trapped inside the pipe.
- Keep pipe size equal to or greater than that of the connecting pipe (PVC pipe, nominal diameter 20mm/0.8in in, outside diameter 25mm/1in).
- Push the drain hose as far as possible over the drain socket, and tighten the metal clamp securely.

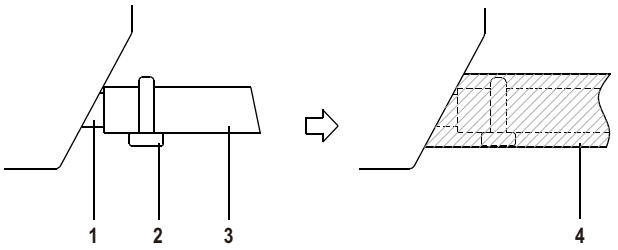

1 Drain socket (attached to the unit)
2 metal clamp
3 Drain hose
4 Insulation (field supply)

- Insulate the drain hose inside the building.
- If the drain hose cannot be sufficiently set on a slope, fit the hose with drain raising piping (field supply).
- Make sure that heat insulation work is executed on the following 2 spots to prevent any possible water leakage due to dew condensation.
  1 Indoor drain pipe.
  2 Drain socket.

4.3 How to perform piping

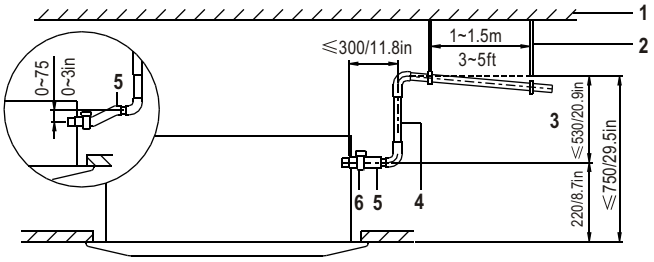

Unit: mm

1 Ceiling slab
2 Hanger bracket
3 Adjustable range
4 Drain raising pipe
5 Drain hose
6 Metal clamp

- Connect the drain hose to the drain raising pipes, and insulate them.
- Connect the drain hose to the drain outlet on the indoor unit, and tighten it with the clamp.

■ **Precautions**

- Install the drain raising pipes at a height of less than 530 mm /20.9 in.
- Install the drain raising pipes at a right angle to the indoor unit and no more than 300 mm/11.8 in from the unit.
- To prevent air bubbles, install the drain hose level or slightly tilted up (⩽75 mm/3 in).
- The incline of drain hose should be 75 mm/3 in or less so that the drain socket does not have to withstand additional force.
- To ensure a downward slope of 1:100, install hanging bars every 1m/3.3ft to 1.5 m/4.9ft.
- When unifying multiple drain pipes, install the pipes as shown in figure below. Select converging drain pipes whose gauge is suitable for the operating capacity of the unit.

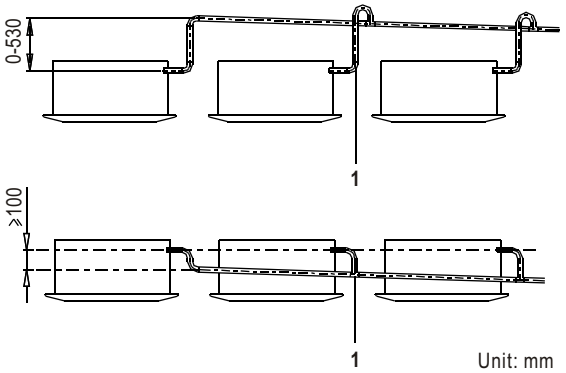

Unit: mm

1 T-joint converging drain pipes

■ Drain piping connections
Do not connect the drain piping directly to sewage pipes that smell of ammonia. The ammonia in the sewage might enter the indoor unit through the drain pipes and corrode the heat exchanger.

■ Keep in mind that it will become the cause of getting drain pipe blocked if water collects on drain pipe.

4.4 Testing of drain piping

After the piping work is finished, check if drainage flows smoothy.

- Add approximately 1L of water gradually through the air discharge outlet.
  Method of adding water (see the figure below)

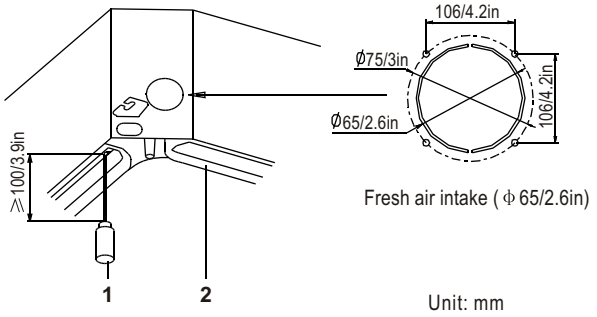

1 Plastic watering can(tube should be about 100 mm/3.9in long)
2 Water-receiver

- When exlectric wiring work is finished, check drainage flow during COOL running, exlplained in "Test operation" on page 16.

5 ELECTRIC WIRING WORK

General instructions

- All field wiring and components must be installed by a licensed electrician and must comply with relevant European and national regulations.
- Use copper wire only.
- Follow the 'Wiring diagram' attached to the unit body to wire the outdoor unit, indoor units and the remote controller.
- A circuit breaker capable of shutting down power supply to the entire system must be installed.
- Note that the operation will restart automatically if the main power supply is turned off and then turned back on again.
- Be sure to ground the air conditioner.
- Do not connect the ground wire to gas pipes, water pipes, lightning rods, or telephone ground wires.
  - Gas pipes: might cause explosions or fire if gas leaks.
  - Water pipes: no grounding effect if hard vinyl piping is used.
  - Telephone ground wires or lightning rods: might cause abnormally highelectric potential in the ground during lightning storms .

The specification of power

Power			
Model	Phase	Frequency and volt	Circuit breaker/Fuse(A)
9K~18K	1Phase	208-240V	20/16

How to connect wiring

- Remove the control box lid of the indoor unit.
  Remove the cover of the outdoor unit.
- Follow the "Wiring diagram label" attached to the indoor unit's control box lid to wire the outdoor unit, indoor unit and the remote controller. Securely fix the wires with a field supplied champ.
- Attach the cover of the outdoor unit.

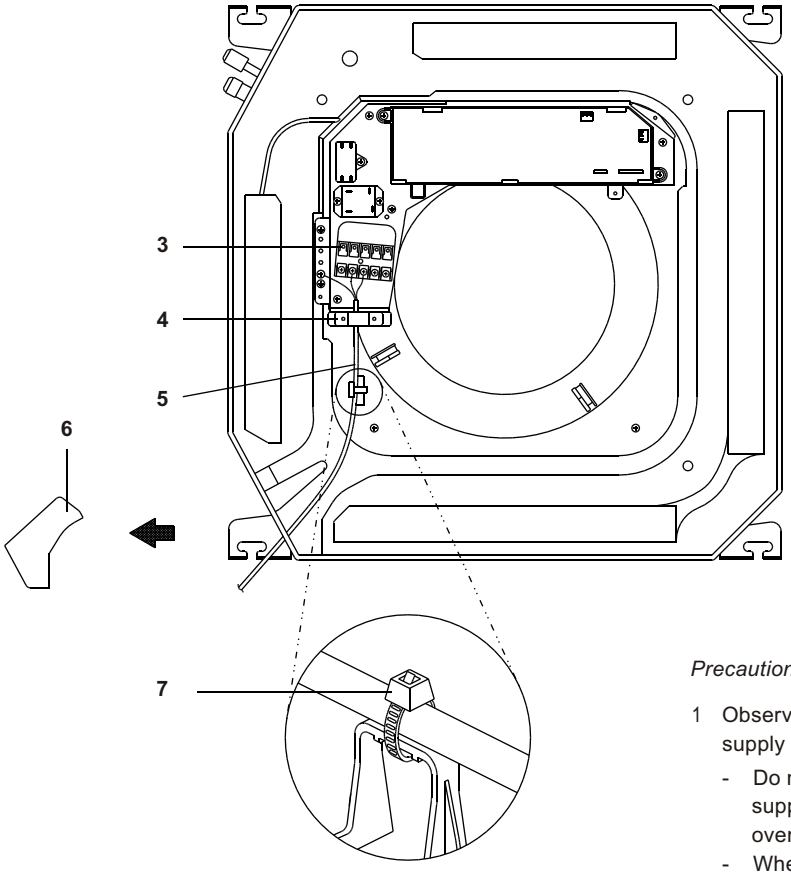

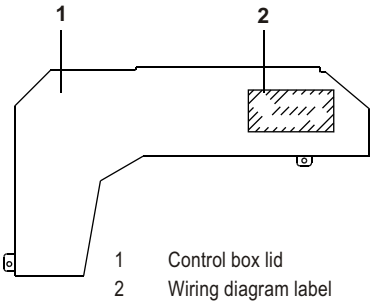

1 Control box lid
2 Wiring diagram label
3 Power supply terminal block
4 Clamp for wiring
5 Wiring between units
6 Plastic cover
7 Clamp (field supply)

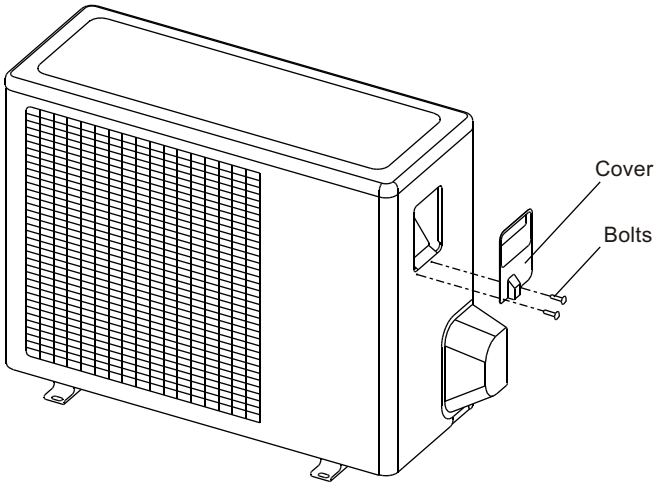

Precautions

1 Observe the notes mentioned below when wiring to the power supply terminal board.
   - Do not connect wires of different gauge to the same power supply terminal. (Looseness in the connection may cause overheating.)
   - When connecting wires of the same gauge, connect them according to the figure.

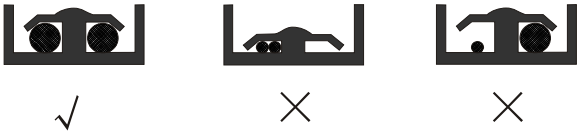

   Use the specified electric wire. Connect the wire securely to the terminal. Lock the wire down without applying excessive force to the terminal. (Tightening torque: 1.31N.m±10%).

   - When attaching the control box lid, make sure not to pinch any wires.
   - After all wiring connections are done, fill in any gaps in the casing wiring holes with putty or insulation material (field supply) thus to prevent small animals or dirt from entering the unit from outside and causing short circuits in the control box.

2 Do not connect wires of different gauge to the same grounding terminal. Looseness in the connection may deteriorate the protection.

3 Use only specified wires and tightly connect wires to the terminals. Be careful that wires do not place external stress on the terminals. Keep wiring in neat order so that they do not obstruct other equipment such as popping open the service cover. Make sure the cover closes tight. Incomplete connections could result in overheating, and in the worst case, electric shock or fire.

6 INSTALLATION OF THE DECORATION PANEL

■ **Detach the intake grille.**

- Slide the 2 grille hooks toward the middle of the decoration panel.

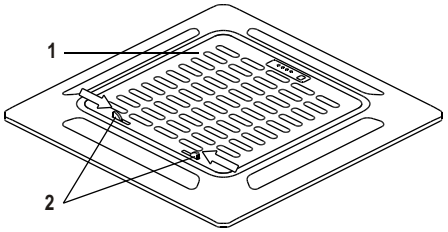

1 Intake grille
2 Grille hook

- Open the intake grille and remove.

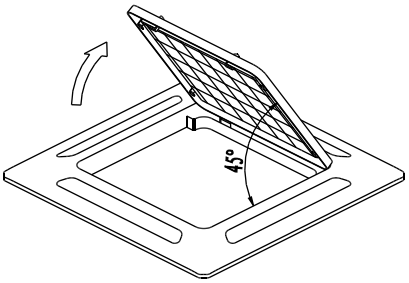

■ **Install the decoration panel**

- Align the indicate "△" on the decoration panel to the indicate "△" on the unit .
- Attach the decoration panel to the unit with the supplied screws as shown in figure below.

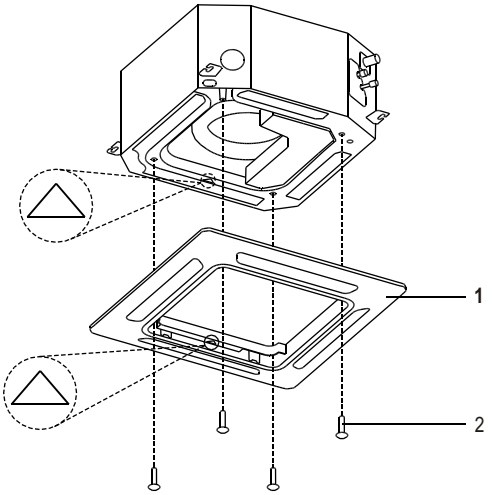

1 Decoration panel
2 Screws (M5)(supplied with the panel)

- After installing the decoration panel, ensure that there is no space between the unit body and decoration panel. Otherwise air may leak through the gap and cause dewdrop. (See figure below)

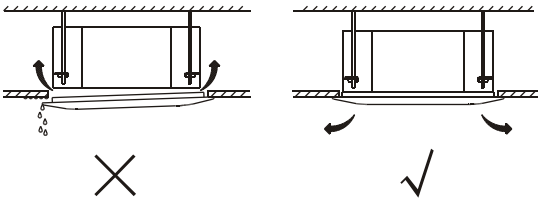

■ **Mount the intake grille.**

Ensure that the buckles at the back of the grille be properly seated in the groove of the panel.

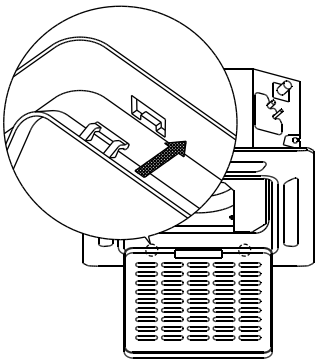

■ **Connect the 2 wires of the decoration panel to the mainboard of the unit.**

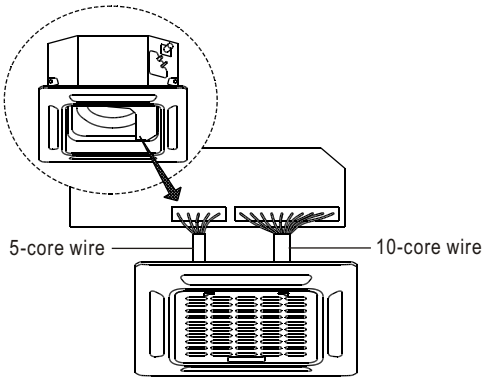

■ **Fasten the control box lid with 2 screws .**

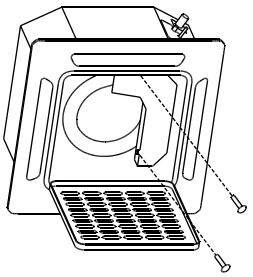

■ **Close the intake grille, and close the 2 grille hooks.**

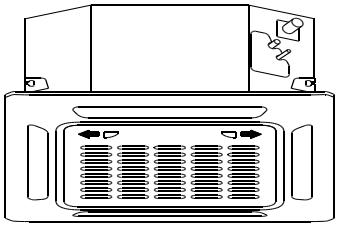

7 TEST OPERATION

Make sure the control box lids are closed on the indoor and outdoor units.

Refer to "For the following items, take special care during construction and check after installation is finished" on page 2.

After finishing the construction of refrigerant piping, drain piping, and electric wiring, conduct test operation accordingly to protect the unit.

Test operation after installing decoration panel

1 Open the gas side stop valve.
2 Open the liquid side stop valve.
3 Electrify crank case heater for 6 hours.
4 Set to cooling operation with the remote controller and start operation by pushing ON/OFF button.
5 Check the following points. If there is any malfunction, please resolve it according to the chapter "Troubleshooting" in the "Owner's Manual".

■ The indoor unit

- Whether the switch on the remote controller works well.
- Whether the buttons on the remote controller works well.
- Whether the air flow louver moves normally.
- Whether the room temperature is adjusted well.
- Whether the indicator lights normally.
- Whether the temporary buttons works well.
- Whether there is vibration or abnormal noise during operation.
- Whether the drainage flows smoothly.

■ The outdoor unit

- Whether there is vibration or abnormal noise during operation.
- Whether the generated wind, noise, or condensed of by the air conditioner have influenced your neighborhood.
- Whether any of the refrigerant is leaked.

6 Turn off the main power supply after operation.

⚠ A protection feature prevents the air conditioner from being activated for approximately 3 minutes when it is restarted immediately after shut off.

The design and specifications are subject to change without prior notice for product improvement. Consult with the sales agency or manufacturer for details.

16122500A11979
5/2017