MIDDLE STATIC PRESSURE DUCT TYPE AIR CONDITIONER

Owner's Manual

Middle Static Pressure Duct Type

Goodman®

MST123E20ADAA
MST183E20ADAA

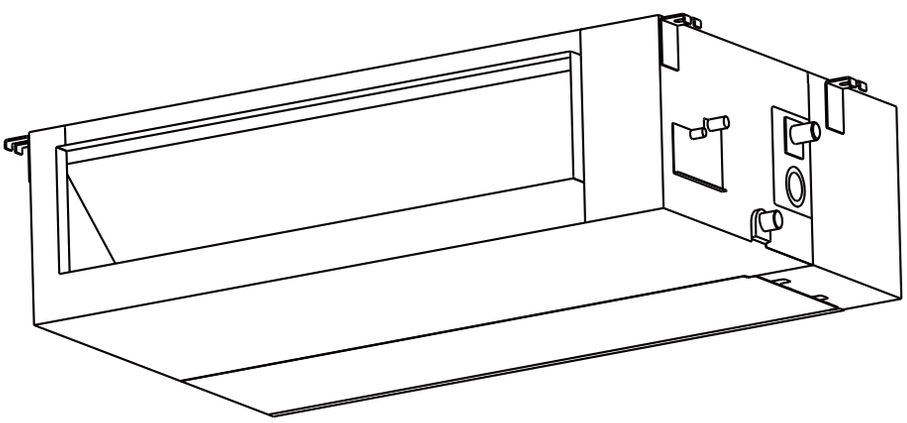

IMPORTANT NOTE:
Read this manual carefully before installing or operating your new air conditioning unit. Make sure to save this manual for future reference.

Table of Contents

Owner's Manual

1 Safety Precautions 04

2 Indoor Unit Parts and Major Functions 05

3 Manual Operations..... 07

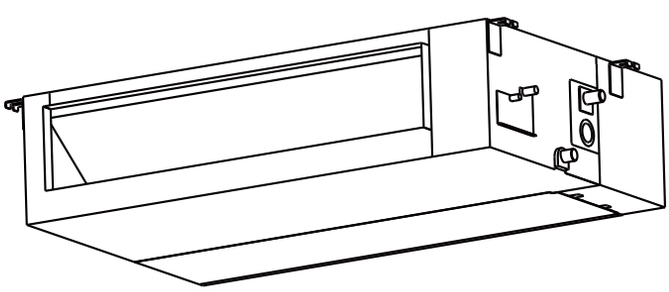

4 Care and Maintenance 08

a. Unit Maintenance 08
b. How to Clean the Air Filter 08
c. Repairing Refrigerant Leaks 09
d. Preparation for Periods of Non-use 09

5 Troubleshooting 10

a. Common Problems 10
b. Troubleshooting Tips 11

6 European Disposal Guidelines 13

Safety Precautions

1

Thank you for purchasing this air conditioner. This manual will provide you with information on how to operate, maintain, and troubleshoot your air conditioner. Following the instructions will ensure the proper function and extended lifespan of your unit.

Please pay attention to the following signs:

WARNING — Failure to observe a warning may result in death. The appliance must be installed in accordance with national regulations.

CAUTION — Failure to observe a caution may result in injury or equipment damage.

WARNING

- Ask an authorized dealer to install this air conditioner. Inappropriate installation may cause water leakage, electric shock, or fire.
- The warranty will be voided if the unit is not installed by professionals.
- If abnormal situation arises (like burning smell), turn off the power supply and call your dealer for instructions to avoid electric shock, fire or injury.
- DO NOT let the indoor unit or the remote control get wet. It may cause electric shock or fire.
- DO NOT insert fingers, rods or other objects into the air inlet or outlet. This may cause injury, since the fan may be rotating at high speeds.
- DO NOT use a flammable spray such as hair spray, lacquer or paint near the unit. This may cause fire or combustion.

CAUTION

- DO NOT touch the air outlet while the swing flap is in motion. Fingers might get caught or the unit may break down.
- DO NOT inspect the unit by yourself. Ask an authorized dealer to perform the inspection.
- To prevent product deterioration, do not use the air conditioner for preservation purposes (storage of food, plants, animals, works of art, etc.).
- DO NOT touch the evaporator coils inside the indoor unit. The evaporator coils are sharp and may cause injury.
- DO NOT operate the air conditioner with wet hands. It may cause electric shock.
- DO NOT place items that might be affected by moisture damage under the indoor unit. Condensation can occur at a relative humidity of 80%.
- DO NOT expose heat-producing appliances to cold air or place them under the indoor unit. This may cause incomplete combustion or deformation of the unit due to the heat.
- After long periods of usage, check the indoor unit to see if anything is damaged. If the indoor unit is damaged, it may fall and cause injury.
- If the air conditioner is used together with other heating devices, thoroughly ventilate the room to avoid oxygen deficiency.
- DO NOT climb onto or place objects on top of the outdoor unit.
- DO NOT operate the air conditioner when using fumigant insecticides. The chemicals may become layered with the unit and endanger those who are hypersensitive to chemicals.
- DO NOT let children play with the air conditioner.
- The air conditioner can be used by children aged 8 years and older and people with reduced physical, sensory or mental capabilities, or lack of experience and knowledge, if they have been given instruction on how to properly and safely operate the system.
- DO NOT operate the air conditioner in a wet room (e.g. bathroom or laundry room). This can cause electrical shock and cause the product to deteriorate.

Indoor Unit Parts And Major Functions

2

Unit Parts

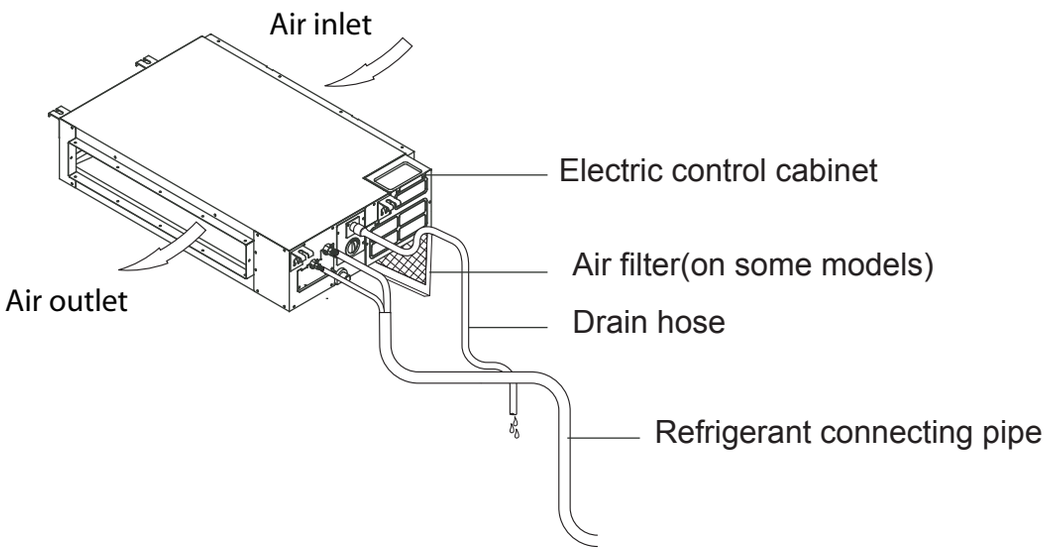

Fig. 2.1

Operating Conditions

Use the system under the following temperatures for safe and effective operation. If the air conditioner is used under different conditions, it may malfunction or become less efficient.

	COOL Mode	HEAT mode	DRY mode
Indoor Temperature	17-32°C (62-90°F)	0-30°C (32-86°F)	17-32°C (62-90°F)
Outdoor Temperature	0-50°C (32-122°F)	-15-24°C (5-76°F)	0-50°C (32-122°F)
	-15-50°C (5-122°F) (low temperature cooling models)		

Features

Default Setting

When the air conditioner restarts after a power failure, it will default to the factory settings (AUTO mode, AUTO fan, 24°C (76°F)). This may cause inconsistencies on the remote control and unit panel. Use your remote control to update the status.

Auto-Restart (some models)

In case of power failure, the system will immediately stop. When power returns, the Operation light on the indoor unit will flash. To restart the unit, press the ON/OFF button on the remote control. If the system has an auto restart function, the unit will restart using the same settings.

Louver Angle Memory Function (Optional)

Some models are designed with a louver angle memory function. When the unit restarts after a power failure, the angle of the horizontal louvers will automatically return to the previous position. The angle of the horizontal louver should not be set too small as condensation may form and drip into the machine. To reset the louver, press the manual button, which will reset the horizontal louver settings.

Refrigerant Leak Detection System (some models)

In the event of a refrigerant leak, the LCD screen will display “EC” and the LED indicator light will flash.

Energy Saving Tips

- DO NOT set the unit to excessive temperature levels.
- While cooling, close the curtains to avoid direct sunlight.
- Doors and windows should be kept closed to keep cool or warm air in the room.
- DO NOT place objects near the air inlet and outlet of the unit.
- Set a timer and use the built-in SLEEP/ECONOMY mode if applicable.
- If you don’t plan to use the unit for a long time, remove the batteries from the remote control.
- Clean the air filter every two weeks.
- Adjust louvers properly and avoid direct airflow.

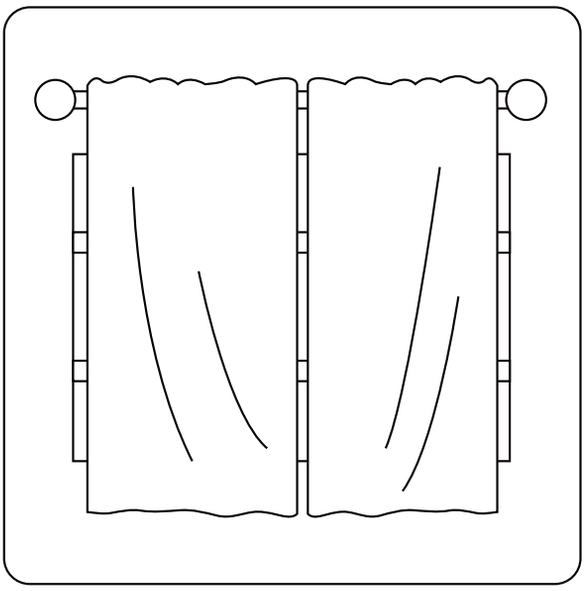

Closing curtains during heating also helps keep the heat in

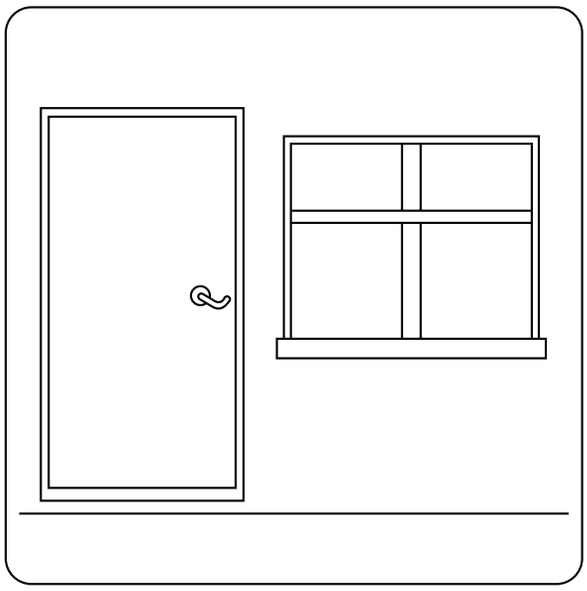

Doors and windows should be kept closed

Manual Operations

3

This display panel on the indoor unit can be used to operate the unit in case the remote control has been misplaced or is out of batteries.

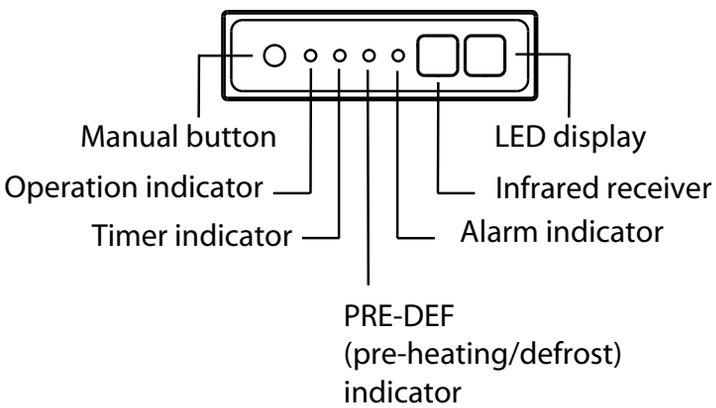

Fig. 3.1

- MANUAL button: This button selects the mode in the following order: AUTO, FORCED COOL, OFF.
- FORCED COOL mode: In FORCED COOL mode, the Operation light flashes. The system will then turn to AUTO after it has cooled with a high wind speed for 30 minutes. The remote control will be disabled during this operation.
- OFF mode: When the panel is turned OFF, the unit turns off and the remote control is re-enabled.

Care And Maintenance

4

Safety Precautions

- Contact an authorized service technician for repair or maintenance. Improper repair and maintenance may cause water leakage, electrical shock, or fire, and may void your warranty.
- DO NOT substitute a blown fuse with a higher or lower amperage rating fuse, as this may cause circuit damage or an electrical fire.
- Make sure the drain hose is set up according to the instructions. Failure to do so could cause leakage and result in personal property damage, fire and electric shock.
- Make sure that all wires are connected properly. Failure to connect wires according to instructions can result in electrical shock or fire.

Unit Maintenance

BEFORE CLEANING OR MAINTENANCE

- Always turn off your air conditioning system and disconnect the power supply before cleaning or maintenance.
- DO NOT use chemicals or chemically treated cloths to clean the unit.
- DO NOT use benzene, paint thinner, polishing powder or other solvents to clean the unit. They can cause the plastic surface to crack or deform.
- DO NOT wash the unit under running water. Doing so creates an electrical hazard.
- DO NOT use water hotter than 40°C (104°F) to clean the front panel. This can cause the panel to become deformed or discolored.
- Clean the unit using a damp, lint-free cloth and neutral detergent. Dry the unit with a dry, lint-free cloth.

How To Clean The Air Filter

The filter prevents dust and other particles from entering the indoor unit. Dust buildup can reduce the efficiency of the air conditioner. For optimum efficiency, clean the air filter every two weeks or more frequently if you live in a dusty area. Replace the filter with a new one if it's heavily clogged and cannot be cleaned.

WARNING: DO NOT REMOVE OR CLEAN THE FILTER BY YOURSELF

Removing and cleaning the filter can be dangerous. Removal and maintenance must be performed by a certified technician.

NOTE: In households with animals, you will have to periodically wipe down the grille to prevent animal hairblocking airflow.

1. For your purchasing unit is a rear ventilated one, please remove the filter fixed screws (2 screws) and take down the filter away from the unit.

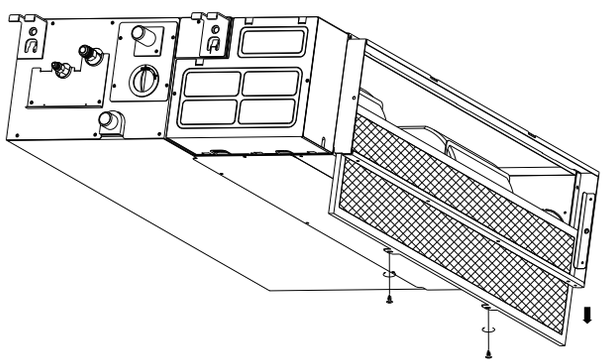

Fig. 4.1

2. For your purchasing unit is a descensional ventilated one, please push the filter up slightly to let the position retainer escape away from the flange fixed holes, and take off the filter according to the arrow direction shows in the following fig.

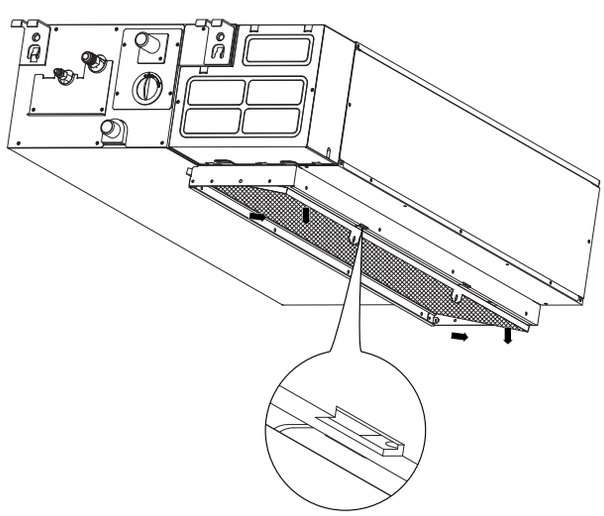

Fig. 4.2

3. Remove the air filter.
4. Clean the air filter by vacuuming the surface or washing it in warm water with mild detergent.

   A. If using a vacuum cleaner, the inlet side should face the vacuum.

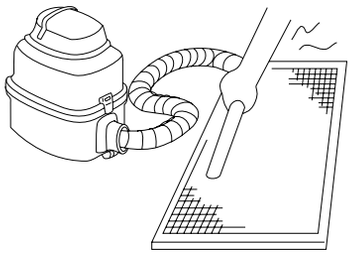

Fig. 4.3

   B. If using water, the inlet side should face down and away from the water stream.

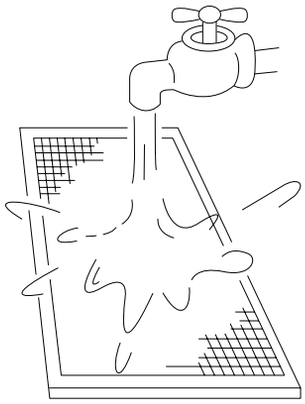

Fig. 4.4

5. Rinse the filter with clean water and allow it to air-dry. DO NOT let the filter dry in direct sunlight.
6. Reinstall the filter.

Repairing Refrigerant Leaks

⚠ WARNING

- If the refrigerant leaks, turn off the air conditioner and any combustible heating devices, ventilate the room and call your dealer immediately. Refrigerant is both toxic and flammable. DO NOT use the air conditioner until the leak is repaired.
- When the air conditioner is installed in a small room, measures must be taken to prevent the refrigerant concentration from exceeding the safety limit in the event of refrigerant leakage. Concentrated refrigerant causes a severe health and safety threat.

Refrigerant Leak Detection System (some models)

- In the event of a refrigerant leak, the LCD screen will display “EC” and the LED indicator light will flash.

Preparation For Periods Of Non-Use

Maintenance after Extended Non-Use

1. Remove any obstacles blocking the vents of both the indoor and outdoor units.
2. Clean the air filter and the front grille of the indoor unit. Reinstall the clean, dry air filter in its original position.
3. Turn on the main power switch at least 12 hours prior to operating the unit.

Storing the Unit While Not In Use

1. Run the appliance on FAN mode for 12 hours in a warm room to dry it and prevent mold.
2. Turn off the appliance and unplug it.
3. Clean the air filter according to the instructions in the previous section. Reinstall the clean, dry filter before storing.
4. Remove the batteries from the remote control.

Troubleshooting

5

CAUTIONS

If one of the following conditions occurs, switch off the power supply immediately and contact your dealer for further assistance.

- The operation light continues to flash rapidly after the unit has been restarted.
- The remote control buttons do not work.
- The unit continually trips fuses or circuit breakers.
- A foreign object or water enters the air conditioner.
- Other abnormal situations.

Common Problems

The following symptoms are not a malfunction and in most situations will not require repairs.

Problem	Possible Causes
Unit does not turn on when pressing ON/ OFF button	The unit has a 3-minute protection feature that prevents the unit from overloading. The unit cannot be restarted within three minutes of being turned off.
	Cooling and Heating Models: If the Operation light and PRE-DEF (Pre-heating/ Defrost) indicators are lit up, the outdoor temperature is too cold and the unit's anti-cold wind is activated in order to defrost the unit.
	In Cooling-only Models: If the "Fan Only" indicator is lit up, the outdoor temperature is too cold and the unit's anti-freeze protection is activated in order to defrost the unit.
The unit changes from COOL mode to FAN mode	The unit changes its setting to prevent frost from forming on the unit. Once the temperature increases, the unit will start operating again.
	The set temperature has been reached, at which point the unit turns off the compressor. The unit will resume operating when the temperature fluctuates again.
The indoor unit emits white mist	In humid regions, a large temperature difference between the room's air and the conditioned air can cause white mist.
Both the indoor and outdoor units emit white mist	When the unit restarts in HEAT mode after defrosting, white mist may be emitted due to moisture generated from the defrosting process.
The indoor unit makes noises	A squeaking sound is heard when the system is OFF or in COOL mode. The noise is also heard when the drain pump (optional) is in operation.
	A squeaking sound may occur after running the unit in HEAT mode due to expansion and contraction of the unit's plastic parts.
Both the indoor unit and outdoor unit make noises	A low hissing sound may occur during operation. This is normal and is caused by refrigerant gas flowing through both the indoor and outdoor units.
	A low hissing sound may be heard when the system starts, has just stopped running or is defrosting. This noise is normal and is caused by the refrigerant gas stopping or changing direction.
The outdoor unit makes noises	The unit will make different sounds based on its current operating mode.

Problem	Possible Causes
Dust is emitted from either the indoor or outdoor unit	The unit may accumulate dust during extended periods of non-use, which will be emitted when the unit is turned on. This can be mitigated by covering the unit during long periods of inactivity.
The unit emits a bad odor	The unit may absorb odors from the environment (such as furniture, cooking, cigarettes, etc.) which will be emitted during operations.
	The unit's filters have become moldy and should be cleaned.
The fan of the outdoor unit does not operate	During operation, the fan speed is controlled to optimize product operation.

Troubleshooting Tips

When troubles occur, please check the following points before contacting a repair company.

Problem	Possible Causes	Solution
The unit is not working	Power failure	Wait for the power to be restored
	The power switch is off	Turn on the power
	The fuse is burned out	Replace the fuse
	Remote control batteries are dead	Replace the remote control batteries
	The unit's 3-minute protection has been activated	Wait three minutes after restarting the unit
Poor cooling performance	Temperature setting may be higher than the ambient room temperature	Lower the temperature setting
	The heat exchanger on the indoor or outdoor unit is dirty	Clean the affected heat exchanger
	The air filter is dirty	Remove the filter and clean it according to instructions
	The air inlet or outlet of either unit is blocked	Turn the unit off, remove the obstruction and turn it back on
	Doors and windows are open	Make sure that all doors and windows are closed while operating the unit
	Excessive heat is generated by sunlight	Close windows and curtains during periods of high heat or bright sunshine
	Low refrigerant due to leak or long-term use	Check for leaks, re-seal if necessary and top off refrigerant
The unit starts and stops frequently	There's too much or too little refrigerant in the system	Check for leaks and recharge the system with refrigerant
	There is air, incompressible gas or foreign material in the refrigeration system.	Evacuate and recharge the system with refrigerant
	System circuit is blocked	Determine which circuit is blocked and replace the malfunctioning piece of equipment
	The compressor is broken	Replace the compressor
	The voltage is too high or too low	Install a manostat to regulate the voltage
Poor heating performance	The outdoor temperature is lower than 7°C (44.5°F)	Check for leaks and recharge the system with refrigerant
	Cold air is entering through doors and windows	Make sure that all doors and windows are closed during use
	Low refrigerant due to leak or long-term use	Check for leaks, re-seal if necessary and top off refrigerant

Error Codes

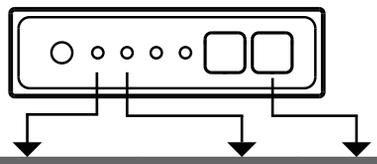

Number	Cause	The number of flashes per second	Timer indicator	Error Code
1	Indoor EEPROM (Electrically Erasable Programmable Read-Only Memory) error	1	Off	E0
2	Indoor and outdoor unit communication malfunction	2	Off	E 1
3	Indoor fan speed malfunction	4	Off	E3
4	Indoor room temperature sensor error	5	Off	E4
5	Evaporator coil temperature sensor error	6	Off	E5
6	Refrigerant leak detection system malfunction	7	Off	EC
7	Water level alarm malfunction	8	Off	EE
8	Dual indoor unit (twin model only) communication malfunction	9	Off	E8
9	Other twin model malfunction	10	Off	E9
10	Overload protection	1	On	F0
11	Outdoor temperature sensor error	2	On	F 1
12	Outdoor condenser pipe sensor error	3	On	F2
13	Discharge air temperature sensor error	4	On	F3
14	Outdoor EEPROM (Electrically Erasable Programmable Read-Only Memory) error	5	On	F4
15	Outdoor fan speed (DC fan motor only) malfunction	6	On	F5
16	T2b sensor error	7	On	F6
17	Inverter module IPM protection	1	Flash	P0
18	High/Low voltage protection	2	Flash	P 1
19	Compressor top overheating protection	3	Flash	P2
20	Outdoor low temperature protection	4	Flash	P3
21	Compressor drive error	5	Flash	P4
22	Mode conflict	6	Flash	P5
23	Compressor low-pressure protection	7	Flash	P6
24	Outdoor IGBT sensor error	8	Flash	P7
25	Indoor unit communication malfunction	11	On	fa

European Disposal Guidelines

6

Users in European Countries may be required to properly dispose of this unit. This appliance contains refrigerant and other potentially hazardous materials. When disposing of this appliance, the law requires special collection and treatment. DO NOT dispose of this product as household waste or unsorted municipal waste.

When disposing of this appliance, you have the following options:

- Dispose of the appliance at designated municipal electronic waste collection facility.
- When buying a new appliance, the retailer will take back the old appliance free of charge.
- The manufacturer will also take back the old appliance free of charge.
- Sell the appliance to certified scrap metal dealers.

NOTE: Disposing of this appliance in the forest or other natural surroundings endangers your health and is bad for the environment. Hazardous substances may leak into the ground water and enter the food chain.

The design and specifications are subject to change without prior notice for product improvement.Consult with the sales agency or manufacturer for details.

16122300A08186
5/2017