SPLIT-TYPE ROOM AIR CONDITIONER

Owner's Manual

Forest Series

All Model Numbers

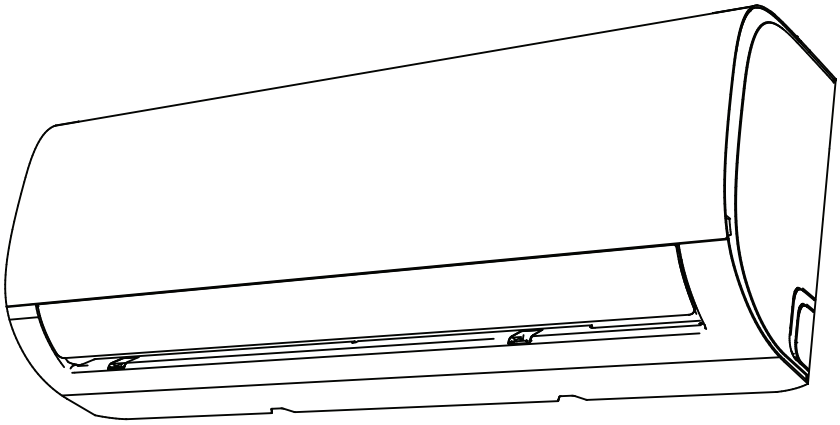

MSC093E15AXAA
MSC093E15MCAA
MSC123E15AXAA
MSC123E15MCAA
MSH123E15AXAA
MSH123E15MCAA
MSH183E15AXAA
MSH183E15MCAA
MSH243E15AXAA
MSH243E15MCAA

16122000A45092
8/2017

IMPORTANT NOTE:

Read this manual carefully before installing or operating your new air conditioning unit. Make sure to save this manual for future reference.

Table of Contents

Owner's Manual

0 Safety Precautions.....04

1 Unit Specifications and Features.....06

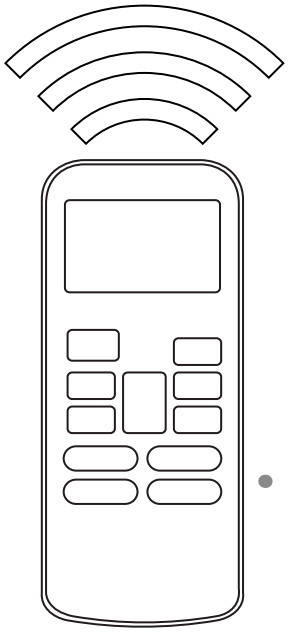

2 Manual Operation (Without Remote).....11

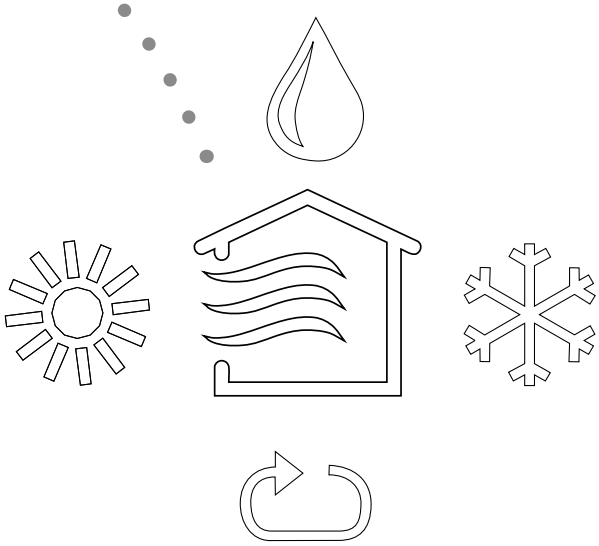

3 **Care and Maintenance**.....12

4 **Troubleshooting**.....14

5 **European Disposal Guidelines**.....18

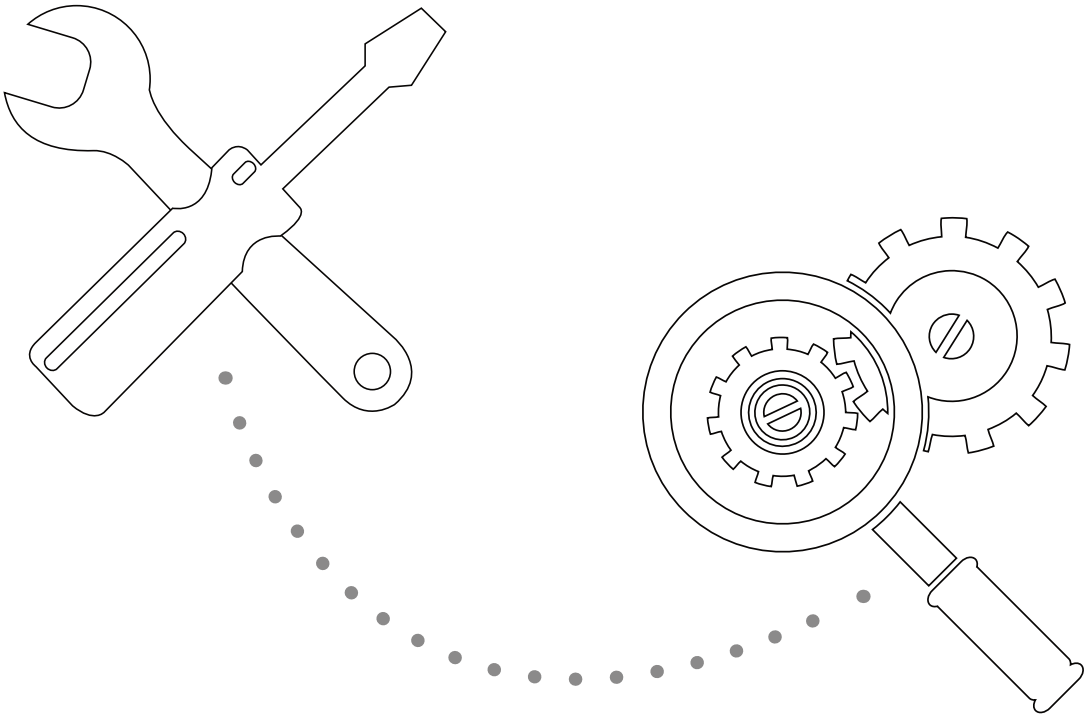

Safety Precautions

Read Safety Precautions Before Installation

Incorrect installation due to ignoring instructions can cause serious damage or injury.
The seriousness of potential damage or injuries is classified as either a **WARNING** or **CAUTION**.

WARNING

This symbol indicates that ignoring instructions may cause death or serious injury.

CAUTION

This symbol indicates that ignoring instructions may cause moderate injury to your person, or damage to your appliance or other property.

WARNING

This appliance can be used by children aged from 8 years and above and persons with reduced physical, sensory or mental capabilities or lack of experience and knowledge if they have been given supervision or instruction concerning use of the appliance in a safe way and understand the hazards involved. Children shall not play with the appliance. Cleaning and user maintenance shall not be made by children without supervision.

INSTALLATION WARNINGS

- Ask an authorized dealer to install this air conditioner. Inappropriate installation may cause water leakage, electric shock, or fire.
- All repairs, maintenance and relocation of this unit must be performed by an authorized service technician. Inappropriate repairs can lead to serious injury or product failure.

WARNINGS FOR PRODUCT USE

- If an abnormal situation arises (like a burning smell), immediately turn off the unit and pull the power plug. Call your dealer for instructions to avoid electric shock, fire or injury.
- **Do not** insert fingers, rods or other objects into the air inlet or outlet. This may cause injury, since the fan may be rotating at high speeds.
- **Do not** use flammable sprays such as hair spray, lacquer or paint near the unit. This may cause fire or combustion.
- **Do not** operate the air conditioner in places near or around combustible gases. Emitted gas may collect around the unit and cause explosion.
- **Do not** operate the air conditioner in a wet room (e.g., bathroom or laundry room). This can cause electrical shock and cause the product to deteriorate.
- **Do not** expose your body directly to cool air for a prolonged period of time.

ELECTRICAL WARNINGS

- Only use the specified power cord. If the power cord is damaged, it must be replaced by the manufacturer or certified service agent.
- Keep power plug clean. Remove any dust or grime that accumulates on or around the plug. Dirty plugs can cause fire or electric shock.
- **Do not** pull power cord to unplug unit. Hold the plug firmly and pull it from the outlet. Pulling directly on the cord can damage it, which can lead to fire or electric shock.
- **Do not** use an extension cord, manually extend the power cord, or connect other appliances to the same outlet as the air conditioner. Poor electrical connections, poor insulation, and insufficient voltage can cause fire.

CLEANING AND MAINTENANCE WARNINGS

- Turn off the device and pull the plug before cleaning. Failure to do so can cause electrical shock.
- **Do not** clean the air conditioner with excessive amounts of water.
- **Do not** clean the air conditioner with combustible cleaning agents. Combustible cleaning agents can cause fire or deformation.

CAUTION

- If the air conditioner is used together with burners or other heating devices, thoroughly ventilate the room to avoid oxygen deficiency.
- Turn off the air conditioner and unplug the unit if you are not going to use it for a long time.
- Turn off and unplug the unit during storms.
- Make sure that water condensation can drain unhindered from the unit.
- **Do not** operate the air conditioner with wet hands. This may cause electric shock.
- **Do not** use device for any other purpose than its intended use.
- **Do not** climb onto or place objects on top of the outdoor unit.
- **Do not** allow the air conditioner to operate for long periods of time with doors or windows open, or if the humidity is very high.

Unit Specifications and Features

1

Unit Parts

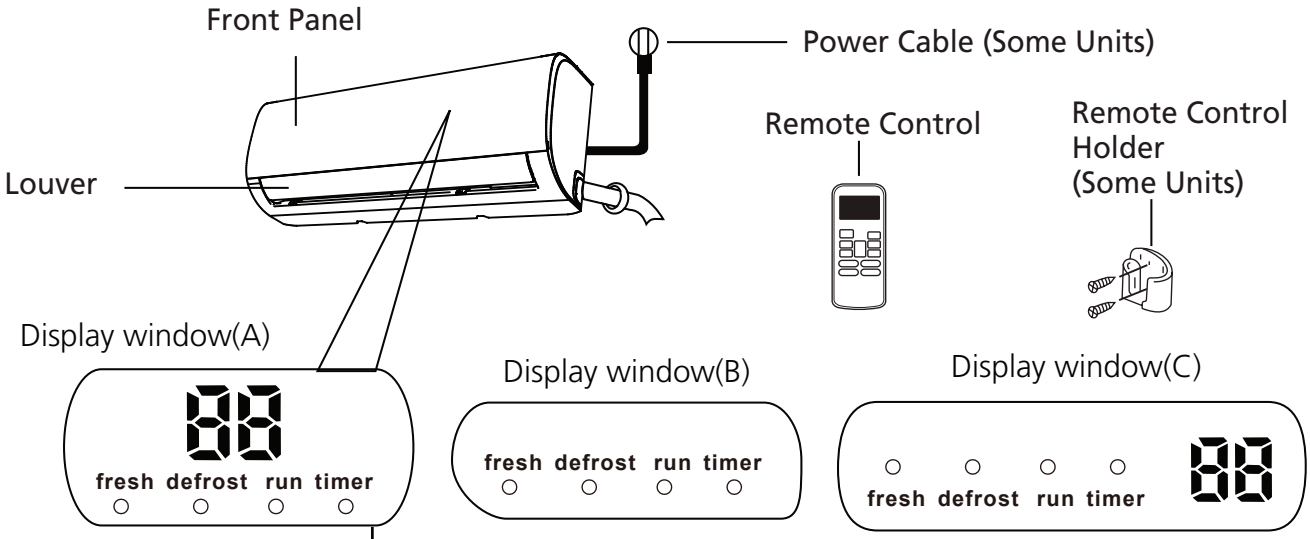

"fresh" when Fresh feature is activated(some units)

"defrost" when defrost feature is activated.

"run" when the unit is on.

"timer" when TIMER is set.

"88" Not available for all units.
When ECO function(some units) is activated, the '88' illuminates gradually one by one as --E
C -- 0 --set temperature -- E ..... in one second interval.
In other modes, the unit will display your temperature setting.
In Fan mode, the unit will display the room temperature.
When error occurs, it displays error code.

Display Code Meanings

"ON" for 3 seconds when:
- TIMER ON is set
- FRESH, SWING, TURBO, or SILENCE features are turned on

"OF" for 3 seconds when:
- TIMER OFF is set
- FRESH, SWING, TURBO, or SILENCE features are turned off

"cF" when anti-cold air feature is turned on

"dF" when defrosting

"SC" when unit is self-cleaning

"FP" when freeze protection is turned on

NOTE: A guide on using the infrared remote is not included in this literature package.

Achieving Optimal Performance

Optimal performance for the COOL, HEAT, and DRY modes can be achieved in the following temperature ranges. When your air conditioner is used outside of these ranges, certain safety protection features will activate and cause the unit to perform less than optimally.

Inverter Split Type

	COOL mode	HEAT mode	DRY mode
Room Temperature	17°C - 32°C (63°F - 90°F)	0°C - 30°C (32°F - 86°F)	10°C - 32°C (50°F - 90°F)
Outdoor Temperature	0°C - 50°C (32°F - 122°F)	-15°C - 30°C (5°F - 86°F)	0°C - 50°C (32°F - 122°F)
	-15°C - 50°C (5°F - 122°F) (For models with low temp. cooling systems.)		
	0°C - 60°C (32°F - 140°F) (For special tropical models)		0°C - 60°C (32°F - 140°F) (For special tropical models)

FOR OUTDOOR UNITS WITH AUXILIARY ELECTRIC HEATER

When outside temperature is below 0°C (32°F), we strongly recommend keeping the unit plugged in at all time to ensure smooth ongoing performance.

Fixed-speed Type

	COOL mode	HEAT mode	DRY mode
Room Temperature	17°-32°C (63°-90°F)	0°-30°C (32°-86°F)	10°-32°C (50°-90°F)
Outdoor Temperature	18°-43°C (64°-109°F)	-7°-24°C (19°-75°F)	11°-43°C (52°-109°F)
	-7°-43°C (19°-109°F) (For models with low-temp cooling systems)		18°-43°C (64°-109°F)
	18°-54°C (64°-129°F) (For special tropical models)		18°-54°C (64°-129°F) (For special tropical models)

To further optimize the performance of your unit, do the following:

- Keep doors and windows closed.
- Limit energy usage by using TIMER ON and TIMER OFF functions.
- Do not block air inlets or outlets.
- Regularly inspect and clean air filters.

For a detailed explanation of each function, refer to the **Remote Control Manual.**

Other Features

- **Auto-Restart**
  If the unit loses power, it will automatically restart with the prior settings once power has been restored.

- **Anti-mildew (some units)**
  When turning off the unit from COOL, AUTO (COOL), or DRY modes, the air conditioner will continue operate at very low power to dry up condensed water and prevent mildew growth.

- **Wireless Control (some units)**
  Wireless control allows you to control your air conditioner using your mobile phone and a Wireless connection.
  For the USB device access, replacement, maintenance operations must be carried out by professional staff.

- **Louver Angle Memory(some units)**
  When turning on your unit, the louver will automatically resume its former angle.

- **Refrigerant Leakage Detection (some units)**
  The indoor unit will automatically display "EC" The "timer" indicator light turns off and the "run" indicator light flashes 7 times when the unit detects refrigerant leakage.

- **Air Filter Reminders (some units)**

Air Filter Cleaning Reminder

After 240 hours of use, the "run" & "timer" indicator lamps on the indoor unit will flash simultaneously and the display window on the indoor unit will flash "CL" (if applicable). This is a reminder to clean your filter. After 15 seconds, the unit will revert to its previous display.

To reset the reminder, press the LED button on your remote control 4 times, or press the **MANUAL CONTROL** botton 3 times**.** If you don't reset the reminder, the "CL", "run" & "timer" indicator lamps will flash again when you restart the unit.

Air Filter Replacement Reminder

After 2,880 hours of use, the "run" & "timer" indicator lamps will flash simultaneously for 10 times, then remain on for five seconds,and the display window on the indoor unit will flash "nF"(if applicable). This is a reminder to replace your filter. After that, the unit will revert to its previous display.

To reset the reminder, press the LED button on your remote control 4 times, or press the **MANUAL CONTROL** botton 3 times. If you don't reset the reminder, the "nF", "run" & "timer" indicator lamps will flash again when you restart the unit.

For a detailed explanation of your unit's advanced functionality (such as TURBO mode and its self-cleaning functions), refer to the **Remote Control Manual.**

NOTE ON ILLUSTRATIONS

Illustrations in this manual are for explanatory purposes. The actual shape of your indoor unit may be slightly different. The actual shape shall prevail.

• Setting Angle of Air Flow

Setting vertical angle of air flow

While the unit is on, use the **SWING/DIRECT** button to set the direction (vertical angle) of airflow.

1. Press the **SWING/DIRECT** button once to activate the louver. Each time you press the button, it will adjust the louver by 6°. Press the button until the direction you prefer is reached.
2. To make the louver swing up and down continuously, press and hold the **SWING/ DIRECT** button for 3 seconds. Press it again to stop the automatic function.

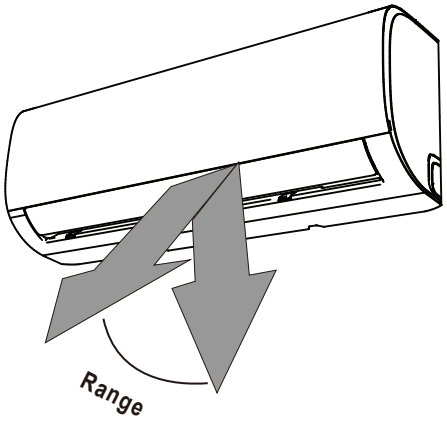

Caution: Do not keep louver at too vertical an angle for long periods of time. This can cause water condensation to drip on your furnishings.

Fig. A

Setting horizontal angle of air flow

The horizontal angle of the airflow must be set manually. Grip the deflector rod (See **Fig.B**) and manually adjust it to your preferred direction. **For some units,** the horizontal angle of the airflow can be set by remote control. Please refer to the Remote Control Manual.

NOTE ON LOUVER ANGLES

When using COOL or DRY mode, do not set louver at too vertical an angle for long periods of time. This can cause water to condense on the louver blade, which will drop on your floor or furnishings. (See **Fig.A**)

When using COOL or HEAT mode, setting the louver at too vertical an angle can reduce the performance of the unit due to restricted air flow.

Do not move louver by hand. This will cause the louver to become out of sync. If this occurs, turn off the unit and unplug it for a few seconds, then restart the unit. This will reset the louver.

CAUTION

Do not put your fingers in or near the blower and suction side of the unit. The high-speed fan inside the unit may cause injury.

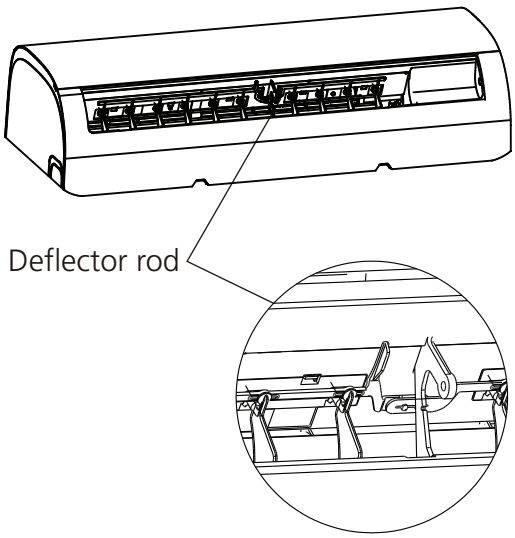

Fig. B

- **Sleep Operation**

The SLEEP function is used to decrease energy use while you sleep (and don't need the same temperature settings to stay comfortable). This function can only be activated via remote control.

Press the **SLEEP** button when you are ready to go to sleep. When in COOL mode, the unit will increase the temperature by 1°C (2°F) after 1 hour, and will increase an additional 1°C (2°F) after another hour. When in HEAT mode, the unit will decrease the temperature by 1°C (2°F) after 1 hour, and will decrease an additional 1°C (2°F) after another hour.

It will hold the new temperature for 5 hours, then the unit will turn off automatically.

Note: The SLEEP function is not available in FAN or DRY mode.

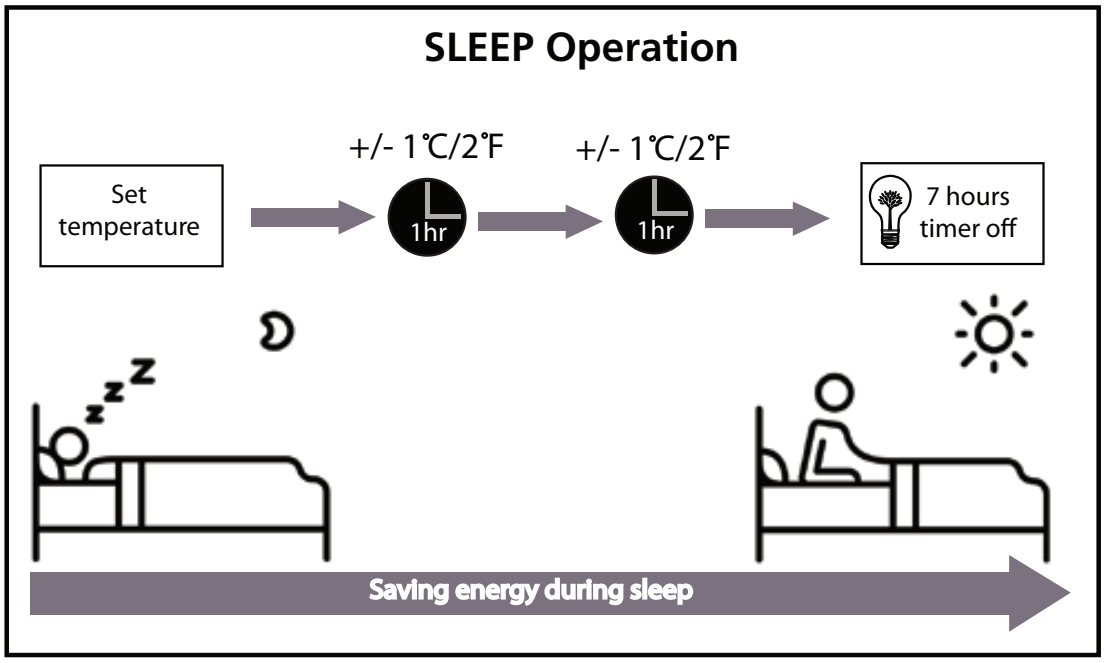

Manual Operation (Without Remote) 2

How to operate your unit without the remote control

In the event that your remote control fails to work, your unit can be operated manually with the **MANUAL CONTROL** button located on the indoor unit. Note that manual operation is not a long-term solution, and that operating the unit with your remote control is strongly recommended.

BEFORE MANUAL OPERATION

Unit must be turned off before manual operation.

To operate your unit manually:

1. Open the front panel of the indoor unit.
2. Locate the **MANUAL CONTROL button** on the right-hand side of the unit.
3. Press the **MANUAL CONTROL button** one time to activate FORCED AUTO mode.
4. Press the **MANUAL CONTROL button** again to activate FORCED COOLING mode.
5. Press the **MANUAL CONTROL button** a third time to turn the unit off.
6. Close the front panel.

CAUTION

The manual button is intended for testing purposes and emergency operation only. Please do not use this function unless the remote is lost and it is absolutely necessary. To restore regular operation, use the remote control to activate the unit.

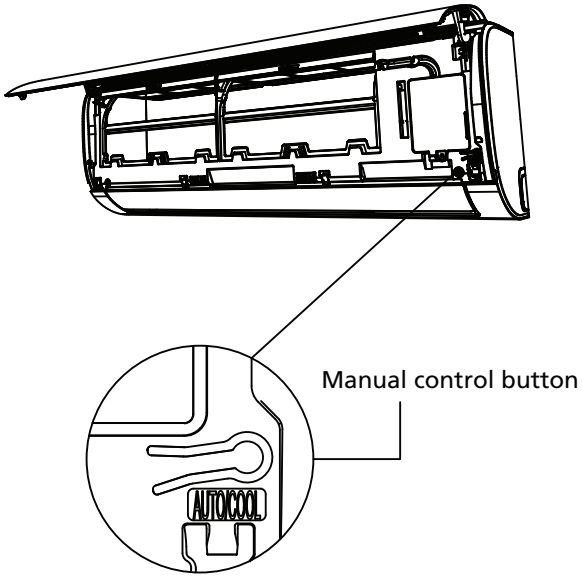

Care and Maintenance

3

Cleaning Your Indoor Unit

BEFORE CLEANING OR MAINTENANCE

ALWAYS TURN OFF YOUR AIR CONDITIONER SYSTEM AND DISCONNECT ITS POWER SUPPLY BEFORE CLEANING OR MAINTENANCE.

CAUTION

Only use a soft, dry cloth to wipe the unit clean. If the unit is especially dirty, you can use a cloth soaked in warm water to wipe it clean.

- **Do not** use chemicals or chemically treated cloths to clean the unit
- **Do not** use benzene, paint thinner, polishing powder or other solvents to clean the unit. They can cause the plastic surface to crack or deform.
- **Do not** use water hotter than 40°C (104°F) to clean the front panel. This can cause the panel to deform or become discolored.

Cleaning Your Air Filter

A clogged air conditioner can reduce the cooling efficiency of your unit, and can also be bad for your health. Make sure to clean the filter once every two weeks.

1. Lift the front panel of the indoor unit.
2. First press the tab on the end of filter to loosen the buckle, lift it up, then pull it towards yourself.
3. Now pull the filter out.
4. If your filter has a small air freshening filter, unclip it from the larger filter. Clean this air freshening filter with a hand-held vacuum.
5. Clean the large air filter with warm, soapy water. Be sure to use a mild detergent.
6. Rinse the filter with fresh water, then shake off excess water.
7. Dry it in a cool, dry place, and refrain from exposing it to direct sunlight.
8. When dry, re-clip the air freshening filter to the larger filter, then slide it back into the indoor unit.
9. Close the front panel of the indoor unit.

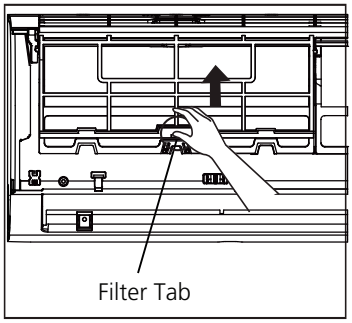

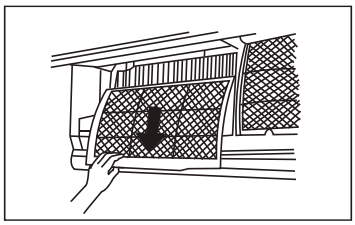

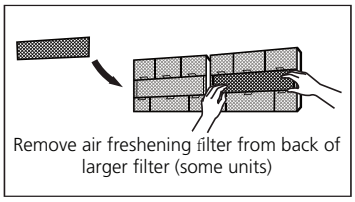

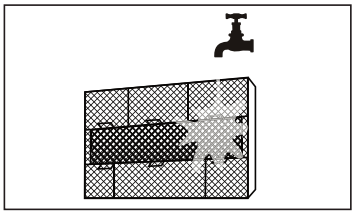

CAUTION

Do not touch air freshening (Plasma) filter for at least 10 minutes after turning off the unit.

CAUTION

- Before changing the filter or cleaning, turn off the unit and disconnect its power supply.
- When removing filter, do not touch metal parts in the unit. The sharp metal edges can cut you.
- Do not use water to clean the inside of the indoor unit. This can destroy insulation and cause electrical shock.
- Do not expose filter to direct sunlight when drying. This can shrink the filter.

Air Filter Reminders (Optional)

Air Filter Cleaning Reminder

After 240 hours of use, the display window on the indoor unit will flash "CL." This is a reminder to clean your filter. After 15 seconds, the unit will revert to its previous display.

To reset the reminder, press the **LED** button on your remote control 4 times, or press the **MANUAL CONTROL** button 3 times. If you don't reset the reminder, the "CL" indicator will flash again when you restart the unit.

Air Filter Replacement Reminder

After 2,880 hours of use, the display window on the indoor unit will flash "nF." This is a reminder to replace your filter. After 15 seconds, the unit will revert to its previous display.

To reset the reminder, press the **LED** button on your remote control 4 times, or press the **MANUAL CONTROL** button 3 times. If you don't reset the reminder, the "nF" indicator will flash again when you restart the unit.

CAUTION

- Any maintenance and cleaning of outdoor unit should be performed by an authorized dealer or licensed service provider.
- Any unit repairs should be performed by authorized dealer or licensed service provider.

Maintenance – Long Periods of Non-Use

If you plan not to use your air conditioner for an extended period of time, do the following:

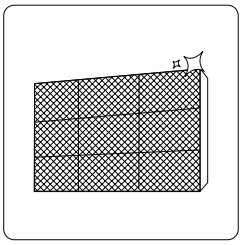

Clean all filters

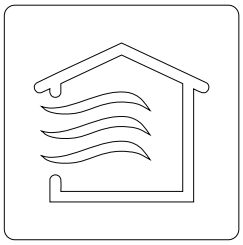

Turn on FAN function until unit dries out completely

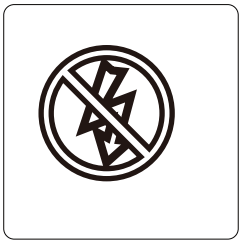

Turn off the unit and disconnect the power

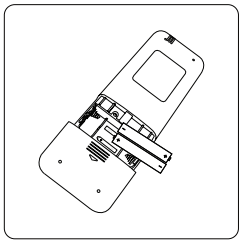

Remove batteries from remote control

Maintenance – Pre-Season Inspection

After long periods of non-use, or before periods of frequent use, do the following:

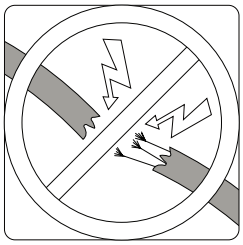

Check for damaged wires

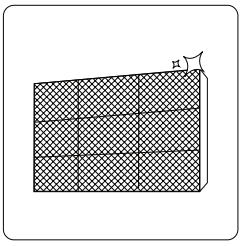

Clean all filters

Check for leaks

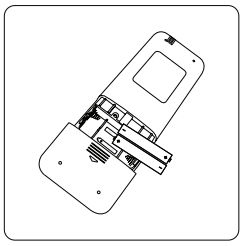

Replace batteries

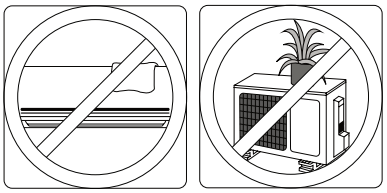

Make sure nothing is blocking all air inlets and outlets

Troubleshooting

4

SAFETY PRECAUTIONS

If ANY of the following conditions occurs, turn off your unit immediately!

- The power cord is damaged or abnormally warm
- You smell a burning odor
- The unit emits loud or abnormal sounds
- A power fuse blows or the circuit breaker frequently trips
- Water or other objects fall into or out of the unit

DO NOT ATTEMPT TO FIX THESE YOURSELF! CONTACT AUTHORIZED SERVICE PROVIDER IMMEDIATELY!

Common Issues

The following problems are not a malfunction and in most situations will not require repairs.

Issue	Possible Causes
Unit does not turn on when pressing ON/OFF button	The Unit has a 3-minute protection feature that prevents the unit from overloading. The unit cannot be restarted within three minutes of being turned off.
The unit changes from COOL/HEAT mode to FAN mode	The unit may change its setting to prevent frost from forming on the unit. Once the temperature increases, the unit will start operating in the previously selected mode again.
	The set temperature has been reached, at which point the unit turns off the compressor. The unit will continue operating when the temperature fluctuates again.
The indoor unit emits white mist	In humid regions, a large temperature difference between the room's air and the conditioned air can cause white mist.
Both the indoor and outdoor units emit white mist	When the unit restarts in HEAT mode after defrosting, white mist may be emitted due to moisture generated from the defrosting process.

Issue	Possible Causes
The indoor unit makes noises	A rushing air sound may occur when the louver resets its position.
	A squeaking sound may occur after running the unit in HEAT mode due to expansion and contraction of the unit's plastic parts.
Both the indoor unit and outdoor unit make noises	Low hissing sound during operation: This is normal and is caused by refrigerant gas flowing through both indoor and outdoor units.
	Low hissing sound when the system starts, has just stopped running, or is defrosting: This noise is normal and is caused by the refrigerant gas stopping or changing direction.
	Squeaking sound: Normal expansion and contraction of plastic and metal parts caused by temperature changes during operation can cause squeaking noises.
The outdoor unit makes noises	The unit will make different sounds based on its current operating mode.
Dust is emitted from either the indoor or outdoor unit	The unit may accumulate dust during extended periods of non-use, which will be emitted when the unit is turned on. This can be mitigated by covering the unit during long periods of inactivity.
The unit emits a bad odor	The unit may absorb odors from the environment (such as furniture, cooking, cigarettes, etc.) which will be emitted during operations.
	The unit's filters have become moldy and should be cleaned.
The fan of the outdoor unit does not operate	During operation, the fan speed is controlled to optimize product operation.
Operation is erratic, unpredictable, or unit is unresponsive	Interference from cell phone towers and remote boosters may cause the unit to malfunction. In this case, try the following: • Disconnect the power, then reconnect. • Press ON/OFF button on remote control to restart operation.

NOTE: If problem persists, contact a local dealer or your nearest customer service center. Provide them with a detailed description of the unit malfunction as well as your model number.

Troubleshooting

When troubles occur, please check the following points before contacting a repair company.

Problem	Possible Causes	Solution
Poor Cooling Performance	Temperature setting may be higher than ambient room temperature	Lower the temperature setting
	The heat exchanger on the indoor or outdoor unit is dirty	Clean the affected heat exchanger
	The air filter is dirty	Remove the filter and clean it according to instructions
	The air inlet or outlet of either unit is blocked	Turn the unit off, remove the obstruction and turn it back on
	Doors and windows are open	Make sure that all doors and windows are closed while operating the unit
	Excessive heat is generated by sunlight	Close windows and curtains during periods of high heat or bright sunshine
	Too many sources of heat in the room (people, computers, electronics, etc.)	Reduce amount of heat sources
	Low refrigerant due to leak or long-term use	Check for leaks, re-seal if necessary and top off refrigerant
	SILENCE function is activated(optional function)	SILENCE function can lower product performance by reducing operating frequency. Turn off SILENCE function.

Problem	Possible Causes	Solution
The unit is not working	Power failure	Wait for the power to be restored
	The power is turned off	Turn on the power
	The fuse is burned out	Replace the fuse
	Remote control batteries are dead	Replace batteries
	The Unit's 3-minute protection has been activated	Wait three minutes after restarting the unit
	Timer is activated	Turn timer off
The unit starts and stops frequently	There's too much or too little refrigerant in the system	Check for leaks and recharge the system with refrigerant.
	Incompressible gas or moisture has entered the system.	Evacuate and recharge the system with refrigerant
	The compressor is broken	Replace the compressor
	The voltage is too high or too low	Install a manostat to regulate the voltage
Poor heating performance	The outdoor temperature is exetremtly low	Use auxiliary heating device
	Cold air is entering through doors and windows	Make sure that all doors and windows are closed during use
	Low refrigerant due to leak or long-term use	Check for leaks, re-seal if necessary and top off refrigerant
Indicator lamps continue flashing	The unit may stop operation or continue to run safely. If the indicator lamps continue to flash or error codes appear, wait for about 10 minutes. The problem may resolve itself. If not, disconnect the power, then connect it again. Turn the unit on. If the problem persists, disconnect the power and contact your nearest customer service center.	
Error code appears in the window display of indoor unit: • **E0, E1, E2…** • **P1, P2, P3…** • **F1, F2, F3…**		

NOTE: If your problem persists after performing the checks and diagnostics above, turn off your unit immediately and contact an authorized service center.

European Disposal Guidelines

5

This appliance contains refrigerant and other potentially hazardous materials. When disposing of this appliance, the law requires special collection and treatment. **Do not** dispose of this product as household waste or unsorted municipal waste.

When disposing of this appliance, you have the following options:

- Dispose of the appliance at designated municipal electronic waste collection facility.
- When buying a new appliance, the retailer will take back the old appliance free of charge.
- The manufacturer will take back the old appliance free of charge.
- Sell the appliance to certified scrap metal dealers.

Special notice

Disposing of this appliance in the forest or other natural surroundings endangers your health and is bad for the environment. Hazardous substances may leak into the ground water and enter the food chain.

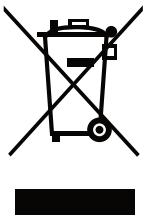

Goodman®

MSC123E15AXAA

The design and specifications are subject to change without prior notice for product improvement. Consult with the sales agency or manufacturer for details.

16122000A45092
8/2017