# GUVA/GCVA
# Two-Stage Variable Speed gas-firedwarm air furnace Installation Instructions

Heating & Air Conditioning
Amana
LASTS AND LASTS AND LASTS.™

*Installer: Affix all manuals adjacent to the unit.*

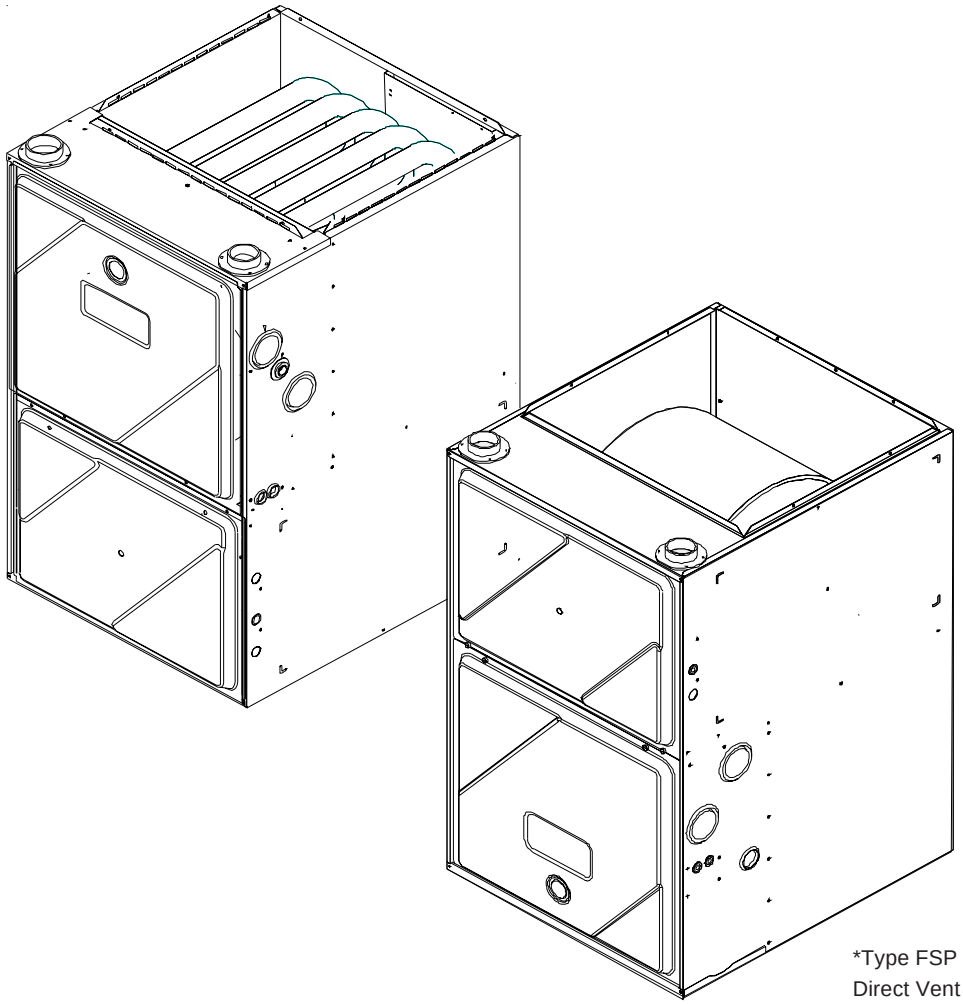

*Type FSP Category IV Direct or Non Direct Vent Forced Air Furnace.

These furnaces comply with requirements embodied in the American National Standard / National Standard of Canada ANSI Z21.47·CSA-2.3 Gas Fired Central Furnaces.

Amana is a trademark of Maytag Worldwide N.V. and is used under license to Goodman Company, L.P. All rights reserved.

*NOTE: Please contact your distributor or our website for the applicable product data book referred to in this manual.

Part No. 10318741 Rev. 1(1)
Printed in USA

*Goodman Company, L.P.*
*1810 Wilson Parkway • Fayetteville, Tennessee 37334*
*www.amana-hac.com*

©2004 Goodman Company, L.P.
Effective: February 2004

# Table of Contents


Table Index ..... 4
I. Component Identification ..... 6
II. Safety ..... 7
Electrostatic Discharge (ESD) Precautions ..... 7
III. Product Application ..... 7
IV. Location Requirements & Considerations ..... 8
General ..... 8
Clearances and Accessibility ..... 8
Furnace Suspension ..... 9
Existing Furnace Removal ..... 9
Thermostat Location ..... 9
V. Combustion & Ventilation Air Requirements ..... 10
VI. Installation Positions ..... 11
VII. Horizontal Applications & Considerations ..... 12
General ..... 12
Drain Trap and Lines ..... 12
Leveling ..... 12
Alternate Vent/Flue and Combustion Air Connections ..... 12
Alternate Electrical and Gas Line Connections ..... 12
Drain Pan ..... 12
Freeze Protection ..... 12
Furnace Suspension ..... 12
VIII. Propane Gas /High Altitude Installations ..... 12
IX. Vent/Flue Pipe & Combustion Air Pipe ..... 13
General ..... 13
Dual Certification: Non-Direct/Direct Vent ..... 13
Materials and Joining Methods ..... 13
Proper Vent/Flue and Combustion Air Piping Practices ..... 13
Termination Locations ..... 13
Canadian Venting Requirements ..... 14
Standard Furnace Connections ..... 14
Alternate Furnace Connections ..... 14
Non-Direct Vent (Single Pipe) Piping ..... 16
Direct Vent (Dual Pipe) Piping ..... 17
Vent/Intake Terminations For Installation of Multiple Direct Vent Furnaces ..... 19
Concentric Vent Termination ..... 19
X. Condensate Drain Lines & Drain Trap ..... 19
General ..... 19
Upright Installations ..... 19
Horizontal Installations ..... 20
XI. Electrical Connections ..... 22
Wiring Harness ..... 22
115 Volt Line Connections ..... 22
24 Volt Thermostat Wiring ..... 22
Single-Stage Thermostat Application ..... 23
24 Volt Dehumidistat Wiring ..... 23
Fossil Fuel Applications ..... 23
115 Volt Line Connection of Accessories (Humidifier and Electronic Air Cleaner) ..... 24
XII. Gas Supply and Piping ..... 24
General ..... 24
Gas Piping Connections ..... 25
Propane Gas Tanks and Piping ..... 26
XIII. Circulating Air & Filters ..... 27
Ductwork - Air Flow ..... 27
Filters - Read This Section Before Installing The Return Air Ductwork ..... 27
Upright Installations ..... 27
Horizontal Installations ..... 27

## Table of Contents


XIV. Startup Procedure & Adjustment ..... 28
- Heat Anticipator Setting ..... 28
- Drain Trap Priming ..... 28
- Furnace operation ..... 28
- Gas Supply Pressure Measurement ..... 28
- Gas Manifold Pressure Measurement and Adjustment ..... 29
- Gas Input Rate Measurement (Natural Gas Only) ..... 29
- Temperature Rise ..... 30
- Circulator Blower Speeds ..... 30
- Blower Heat Off Delay Timings ..... 31

XV. Normal Sequence of Operation ..... 31
- Power Up ..... 31
- Heating Mode ..... 31
- Cooling Mode ..... 32
- Fan Only Mode ..... 32

XVI. Operational Checks ..... 32
- Burner Flame ..... 32
- Primary Limit ..... 32

XVII. Safety Circuit Description ..... 36
- General ..... 36
- Integrated Control Module ..... 36
- Primary Limit ..... 36
- Auxiliary Limit ..... 36
- Rollout Limit ..... 36
- Pressure Switches ..... 36
- Flame Sensor ..... 36

XVIII. Troubleshooting ..... 36
- Electrostatic Discharge (ESD) Precautions ..... 36
- Diagnostic Chart ..... 36
- Resetting From Lockout ..... 36

XIX. Maintenance ..... 37
- Annual inspection ..... 37
- Filters ..... 37
- Burners ..... 37
- Induced Draft and Circulator Blowers ..... 37
- Condensate Trap and Drain System (Qualified Servicer Only) ..... 37
- Flame Sensor (Qualified Servicer Only) ..... 37
- Flue Passages (Qualified Servicer Only) ..... 37

XX. Internal Filter Removal ..... 38

XXI. Before Leaving an Installation ..... 38

XXII. Repair & Replacement Parts ..... 38

GUVA Wiring Diagram ..... 41

GCVA Wiring Diagram ..... 42


# ATTENTION INSTALLING PERSONNEL

As a professional installer you have an obligation to know the product better than the customer. This includes all safety precautions and related items.

Prior to actual installation, thoroughly familiarize yourself with this Instruction Manual. Pay special attention to all safety warnings. Often during installation or repair it is possible to place yourself in a position which is more hazardous than when the unit is in operation.

Remember, it is your responsibility to install the product safely and to know it well enough to be able to instruct a customer in its safe use.

Safety is a matter of common sense...a matter of thinking before acting. Most dealers have a list of specific good safety practices...follow them.

The precautions listed in this Installation Manual are intended as supplemental to existing practices. However, if there is a direct conflict between existing practices and the content of this manual, the precautions listed here take precedence.

**WARNING**

**IF THE INFORMATION IN THESE INSTRUCTIONS IS NOT FOLLOWED EXACTLY, A FIRE OR EXPLOSION MAY RESULT CAUSING PROPERTY DAMAGE, PERSONAL INJURY OR LOSS OF LIFE.**

– DO NOT STORE OR USE GASOLINE OR OTHER FLAMMABLE VAPORS AND LIQUIDS IN THE VICINITY OF THIS OR ANY OTHER APPLIANCE.

– **WHAT TO DO IF YOU SMELL GAS**:

- DO NOT TRY TO LIGHT ANY APPLIANCE.
- DO NOT TOUCH ANY ELECTRICAL SWITCH; DO NOT USE ANY PHONE IN YOUR BUILDING.
- IMMEDIATELY CALL YOUR GAS SUPPLIER FROM A NEIGHBOR'S PHONE. FOLLOW THE GAS SUPPLIER'S INSTRUCTIONS.
- IF YOU CANNOT REACH YOUR GAS SUPPLIER, CALL THE FIRE DEPARTMENT.

– INSTALLATION AND SERVICE MUST BE PERFORMED BY A QUALIFIED INSTALLER, SERVICE AGENCY OR THE GAS SUPPLIER.

**WARNING**

**SHOULD OVERHEATING OCCUR OR THE GAS SUPPLY FAIL TO SHUT OFF, TURN OFF THE MANUAL GAS SHUTOFF VALVE EXTERNAL TO THE FURNACE BEFORE TURNING OFF THE ELECTRICAL SUPPLY.**

**DANGER**
**PELIGRO**

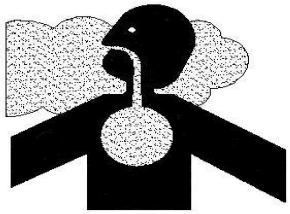

**CARBON MONOXIDE POISONING HAZARD**

**Special Warning for Installation of Furnace or Air Handling Units in Enclosed Areas such as Garages, Utility Rooms or Parking Areas**

**Carbon monoxide producing devices (such as an automobile, space heater, gas water heater, etc.) should not be operated in enclosed areas such as unventilated garages, utility rooms or parking areas because of the danger of carbon monoxide (CO) poisoning resulting from the exhaust emissions. If a furnace or air handler is installed in an enclosed area such as a garage, utility room or parking area and a carbon monoxide producing device is operated therein, there must be adequate, direct outside ventilation.**

**This ventilation is necessary to avoid the danger of CO poisoning which can occur if a carbon monoxide producing device continues to operate in the enclosed area. Carbon monoxide emissions can be (re)circulated throughout the structure if the furnace or air handler is operating in any mode.**

**CO can cause serious illness including permanent brain damage or death.**

**B10259-216**

## TO THE OWNER

It is important that you fill out the owner's registration card and mail it today. This will assist us in contacting you should any service or warranty information change in the future. When filling in the registration card, be sure to include the model, manufacturing, and serial numbers, plus the installation date.

Your warranty certificate is also supplied with the unit. Read the warranty carefully and note what is covered. Keep the warranty certificate in a safe location for future reference.

If additional information or operating instructions are required, contact the dealer where the purchase was made.

Homeowner Notice:

If the residence is left unattended for an extended period of time (i.e., 4 hours or greater), have your heating system periodically checked to ensure proper operation. Potential circumstances beyond our control such as power outages, gas service interruptions, product installation, or component failures could result in heating system operational problems.

## TO THE INSTALLER

Before installing this unit, please read this manual thoroughly to familiarize yourself with specific items which must be adhered to, including but not limited to: unit maximum external static pressure, gas pressures, BTU input rating, proper electrical connections, circulating air temperature rise, minimum or maximum CFM, and motor speed connections.

## TRANSPORTATION DAMAGE

All units are securely packed in shipping containers tested according to International Safe Transit Association specifications. The carton must be checked upon arrival for external damage. If damage is found, a request for inspection by carrier's agent must be made in writing immediately.

The furnace must be carefully inspected on arrival for damage and bolts or screws which may have come loose in transit. In the event of damage the consignee should:

1. Make a notation on delivery receipt of any visible damage to shipment or container.
2. Notify carrier promptly and request an inspection.
3. With concealed damage, carrier must be notified as soon as possible - preferably within five days.
4. File the claim with the following support documents within a nine month statute of limitations.
   - Original or certified copy of the Bill of Lading, or indemnity bond.
   - Original paid freight bill or indemnity in lieu thereof.
   - Original or certified copy of the invoice, showing trade and other discounts or reductions.
   - Copy of the inspection report issued by carrier's representative at the time damage is reported to carrier.

The carrier is responsible for making prompt inspection of damage and for a thorough investigation of each claim. The distributor or manufacturer will not accept claims from dealers for transportation damage.

***Keep this literature in a safe place for future reference.***

# I. COMPONENT IDENTIFICATION

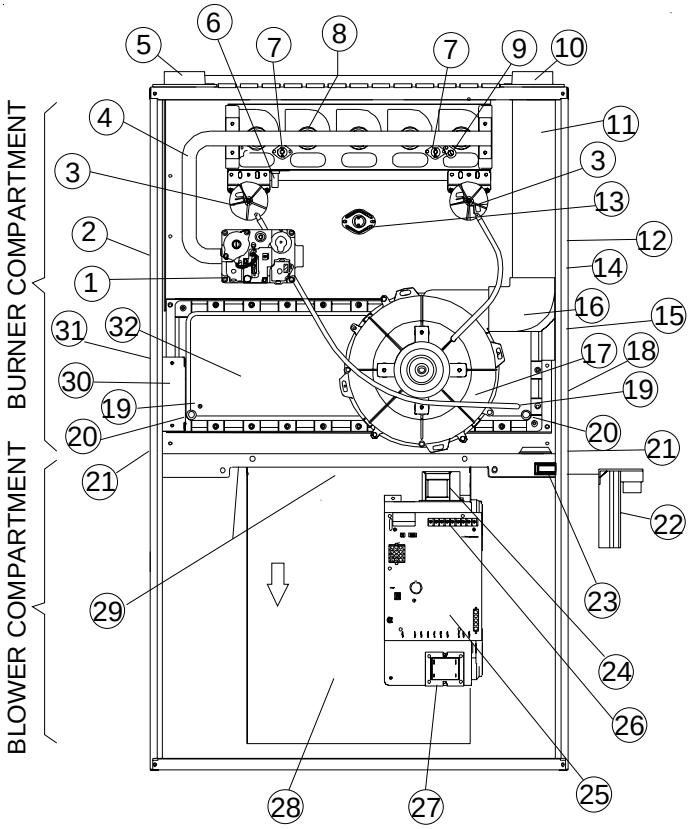


**Upflow/Horizontal (GUVA)**

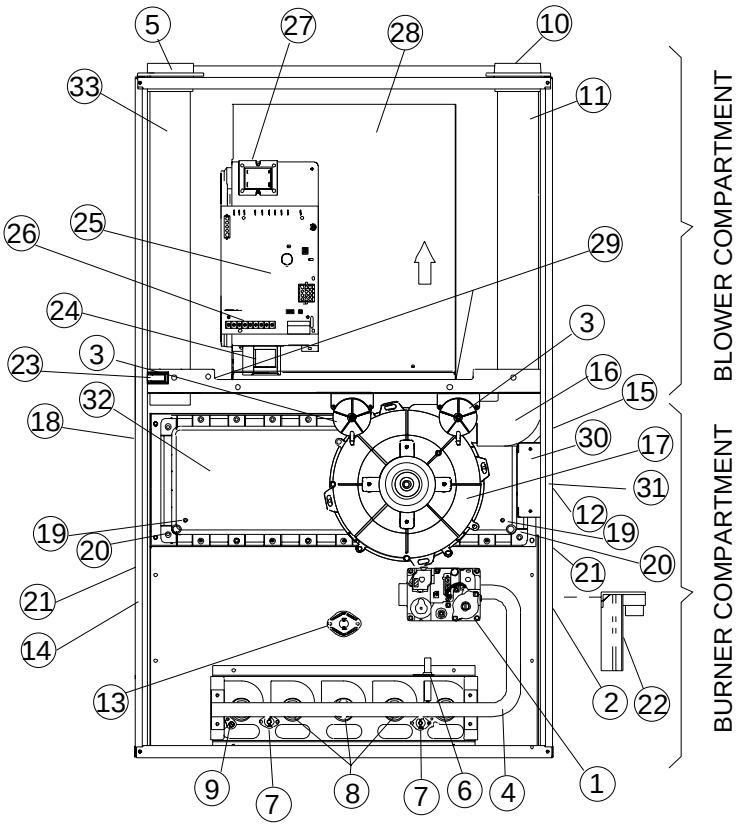


**Counterflow/Horizontal (GCVA)**

1 Two-Stage Gas Valve
2 Gas Line Entrance (Alternate)
3 Pressure Switch(es)
4 Gas Manifold
5 Combustion Air Intake Connection
6 Hot Surface Igniter
7 Rollout Limit
8 Burners
9 Flame Sensor
10 Flue Pipe Connection
11 Flue Pipe
12 Combustion Air Intake (Alternate)
13 Primary Limit
14 Gas Line Entrance
15 Flue Pipe Connection (Alternate)
16 Rubber Elbow
17 Two-Speed Induced Draft Blower
18 Electrical Connection Inlets (Alternate)
19 Coil Front Cover Pressure Tap
20 Coil Front Cover Drain Port
21 Drain Line Penetrations
22 Drain Trap
23 Blower Door Interlock Switch
24 Inductor (Not All Models)
25 Two-Stage Integrated Control Module (with fuse and diagnostic LED)
26 24 Volt Thermostat Connections
27 Transformer (40 VA)
28 ECM Variable Speed Circulator Blower
29 Auxiliary Limit
30 Junction Box
31 Electrical Connection Inlets
32 Coil Front Cover
33 Combustion Air Inlet Pipe

## II. SAFETY

Please adhere to the following warnings and cautions when installing, adjusting, altering, servicing, or operating the furnace.

**WARNING**

TO PREVENT PERSONAL INJURY OR DEATH DUE TO IMPROPER INSTALLATION, ADJUSTMENT, ALTERATION, SERVICE OR MAINTENANCE, REFER TO THIS MANUAL. FOR ADDITIONAL ASSISTANCE OR INFORMATION, CONSULT A QUALIFIED INSTALLER, SERVICE AGENCY OR THE GAS SUPPLIER.

**WARNING**

THIS PRODUCT CONTAINS OR PRODUCES A CHEMICAL OR CHEMICALS WHICH MAY CAUSE SERIOUS ILLNESS OR DEATH AND WHICH ARE KNOWN TO THE STATE OF CALIFORNIA TO CAUSE CANCER, BIRTH DEFECTS OR OTHER REPRODUCTIVE HARM.

**WARNING**

TO PREVENT POSSIBLE PROPERTY DAMAGE, PERSONAL INJURY OR DEATH DUE TO ELECTRICAL SHOCK, THE FURNACE MUST BE LOCATED TO PROTECT THE ELECTRICAL COMPONENTS FROM WATER.

**WARNING**

THIS UNIT MUST NOT BE USED AS A "CONSTRUCTION HEATER" DURING THE FINISHING PHASES OF CONSTRUCTION ON A NEW STRUCTURE. THIS TYPE OF USE MAY RESULT IN PREMATURE FAILURE OF THE UNIT DUE TO EXTREMELY LOW RETURN AIR TERMPERATURES AND EXPOSURE TO CORROSIVE OR VERY DIRTY ATMOSPHERES.

**WARNING**

HEATING UNIT SHOULD NOT BE UTILIZED WITHOUT REASONABLE, ROUTINE, INSPECTION, MAINTENANCE AND SUPERVISION. IF THE BUILIDNG IN WHICH ANY SUCH DEVICE IS LOCATED WILL BE VACANT, CARE SHOULD BE TAKEN THAT SUCH DEVICE IS ROUTINELY INSPECTED, MAINTAINED AND MONITORED. IN THE EVENT THAT THE BUILDING MAYBE EXPOSED TO FREEZING TEMPERATURES AND WILL BE VACANT, ALL WATER-BEARING PIPES SHOULD BE DRAINED, THE BUILDING SHOULD BE PROPERLY WINTERIZED, AND THE WATER SOURCE CLOSED. IN THE EVENT THAT THE BUILDING MAY BE EXPOSED TO FREEZING TEMPERATURES AND WILL BE VACANT, ANY HYDRONIC COIL UNITS SHOULD BE DRAINED AS WELL AND, IN SUCH CASE, ALTERNATIVE HEAT SOURCES SHOULD BE UTILIZED.

### ELECTROSTATIC DISCHARGE (ESD) PRECAUTIONS

**NOTE:** Discharge body's static electricity before touching unit. An electrostatic discharge can adversely affect electrical components. Use the following precautions during furnace installation and servicing to protect the integrated control module from damage. By putting the furnace, the control, and the person at the same electrostatic potential, these steps will help avoid exposing the integrated control module to electrostatic discharge. This procedure is applicable to both installed and non-installed (ungrounded) furnaces.

1. Disconnect all power to the furnace. Do not touch the integrated control module or any wire connected to the control prior to discharging your body's electrostatic charge to ground.
2. Firmly touch a clean, unpainted, metal surface of the furnaces near the control. Any tools held in a person's hand during grounding will be discharged.
3. Service integrated control module or connecting wiring following the discharge process in step 2. Use caution not to recharge your body with static electricity; (i.e., do not move or shuffle your feet, do not touch ungrounded objects, etc.). If you come in contact with an ungrounded object, repeat step 2 before touching control or wires.
4. Discharge your body to ground before removing a new control from its container. Follow steps 1 through 3 if installing the control on a furnace. Return any old or new controls to their containers before touching any ungrounded object.

## III. PRODUCT APPLICATION

This furnace is primarily designed for residential home-heating applications. It is NOT designed or certified for use in mobile homes, trailers or recreational vehicles. Neither is it designed or certified for outdoor applications. The furnace **must** be installed indoors (i.e., attic space, crawl space, or garage area provided the garage area is enclosed with an operating door).

This furnace can be used in the following non-industrial commercial applications:

**Schools, Office buildings, Churches, Retail stores**

**Nursing homes, Hotels/motels, Common or office areas**

In such applications , the furnace must be installed with the following stipulations:

- It must be installed per the installation instructions provided and per local and national codes.
- It must be installed indoors in a building constructed on site.
- It must be part of a ducted system and not used in a free air delivery application.
- It must not be used as a "make-up" air unit.
- It must be installed with two-pipe systems for combustion air, especially if VOC's or other contaminants are present in the conditioned space.
- All other warranty exclusions and restrictions apply This furnace is an CSA dual-certified appliance and is appropriate for use with natural or propane gas (**NOTE:** If using propane, a propane conversion kit is required).

Dual certification means that the combustion air inlet pipe is optional and the furnace can be vented as a:

Non-direct vent (single pipe) central forced air furnace in which combustion air is taken from the installation area or from air ducted from the outside or,

Direct vent (dual pipe) central forced air furnace in which all combustion air supplied directly to the furnace burners through a special air intake system outlined in these instructions.

To ensure proper installation and operation, thoroughly read this manual for specifics pertaining to the installation and application of this product.

**WARNING**

POSSIBLE PROPERTY DAMAGE, PERSONAL INJURY OR DEATH DUE TO FIRE, EXPLOSION, SMOKE, SOOT, CONDENSTAION, ELECTRICAL SHOCK OR CARBON MONOXIDE MAY RESULT FROM IMPROPER INSTALLATION, REPAIR, OPERATION, OR MAINTENANCE OF THIS PRODUCT.

**WARNING**

TO PREVENT PROPERTY DAMAGE, PERSONAL INJURY OR DEATH DUE TO FIRE, DO NOT INSTALL THIS FURNACE IN A MOBILE HOME, TRAILER, OR RECREATIONAL VEHICLE.

To ensure proper furnace operation, install, operate and maintain the furnace in accordance with these installation and operation instructions, all local building codes and ordinances. In their absence, follow the latest edition of the National Fuel Gas Code (NFPA 54/ANSI Z223.1), and/or CAN/CSA B149 Installation Codes, local plumbing or waste water codes, and other applicable codes.

A copy of the National Fuel Gas Code (NFPA 54/ANSI Z223.1) can be obtained from any of the following:

American National Standards Institute
1430 Broadway
New York, NY 10018

National Fire Protection Association
1 Batterymarch Park
Quincy, MA 02269

CSA International
8501 East Pleasant Valley
Cleveland, OH 44131

A copy of the CAN/CSA B149 Installation Codes can also be obtained from:

CSA International
178 Rexdale Boulevard
Etobicoke, Ontario, Canada M9W 1R3

The rated heating capacity of the furnace should be greater than or equal to the total heat loss of the area to be heated. The total heat loss should be calculated by an approved method or in accordance with "ASHRAE Guide" or "Manual J-Load Calculations" published by the Air Conditioning Contractors of America.

## IV. LOCATION REQUIREMENTS & CONSIDERATIONS

### General

**WARNING**

**TO PREVENT POSSIBLE EQUIPMENT DAMAGE, PROPERTY DAMAGE, PERSONAL INJURY OR DEATH, THE FOLLOWING BULLET POINTS MUST BE OBSERVED WHEN INSTALLING THE UNIT.**

Follow the instructions listed below when selecting a furnace location. Refer also to the guidelines provided in *Section V, Combustion and Ventilation Air Requirements.*

- Centrally locate the furnace with respect to the proposed or existing air distribution system.
- Ensure the temperature of the return air entering the furnace is between 55°F and 100°F when the furnace is heating.
- Provide provisions for venting combustion products outdoors through a proper venting system. Special consideration should be given to vent/flue pipe routing and combustion air intake pipe when applicable. Refer to *Section IX, Vent/Flue Pipe and Combustion Air Pipe - Termination Locations* for appropriate termination locations and to determine if the piping system from furnace to termination can be accomplished within the guidelines given. **NOTE:** The length of flue and/or combustion air piping can be a limiting factor in the location of the furnace.
- Locate the furnace so that the condensate can be piped at a downward slope between furnace and drain. Do not locate the furnace or its condensate drainage system in any area subject to below freezing temperatures without proper freeze protection. Refer to *Section X, Condensate Drain Lines and Trap* for further details.
- Ensure adequate combustion air is available for the furnace. Improper or insufficient combustion air can expose building occupants to gas combustion products that could include carbon monoxide. Refer to *Section V, Combustion and Ventilation Air Requirements.*
- Set the furnace on a level floor to enable proper condensate drainage. If the floor becomes wet or damp at times, place the furnace above the floor on a concrete base sized approximately 1-1/2" larger than the base of the furnace. Refer to the *Section VII, Horizontal Applications and Considerations* for leveling of horizontal furnaces.
- Ensure upflow or horizontal furnaces are not installed directly on carpeting, or any other combustible material. The only combustible material allowed is wood.
- A special accessory subbase must be used for upright counterflow unit installations over any combustible material (including wood). Refer to subbase instructions for installation details. (NOTE: A subbase will not be required if an air conditioning coil is located beneath the furnace between the supply air opening and the combustible floor.
- Exposure to contaminated combustion air will result in safety and performance-related problems. Do not install the furnace where the combustion air is exposed to the following substances:
  - chlorinated waxes or cleaners
  - chlorine-based swimming pool chemicals
  - water softening chemicals
  - deicing salts or chemicals
  - carbon tetrachloride
  - halogen type refrigerants
  - cleaning solutions (such as perchloroethylene)
  - printing inks
  - paint removers
  - varnishes
  - hydrochloric acid
  - cements and glues
  - antistatic fabric softeners for clothes dryers
  - and masonry acid washing materials
- Seal off a *non-direct vent* furnace if it is installed near an area frequently contaminated by any of the above substances. This protects the *non-direct vent* furnace from airborne contaminants. To ensure that the enclosed *non-direct vent* furnace has an adequate supply of combustion air, vent from a nearby uncontaminated room or from outdoors. Refer to the *Section V, Combustion and Ventilation Air Requirements* for details.
- If the furnace is used in connection with a cooling unit, install the furnace upstream or in parallel with the cooling unit. Premature heat exchanger failure will result if the cooling unit is placed ahead of the furnace.
- If the furnace is installed in a residential garage, position the furnace so that the burners and ignition source are located not less than 18 inches (457 mm) above the floor. Protect the furnace from physical damage by vehicles.
- If the furnace is installed horizontally, the furnace access doors must be vertical so that the burners fire horizontally into the heat exchanger. Do not install the unit with the access doors on the "up/top" or "down/bottom" side of the furnace.

### Clearances and Accessibility

Installations must adhere to the clearances to combustible materials which this furnace has been design certified to. The minimum clearance information for this furnace is provided on the unit's clearance label. These clearances must be permanently maintained. Clearances must also accommodate an installation's gas, electrical, and drain trap and drain line connections. If the alternate combustion air intake or vent/flue connections are used additional clearances must be provided to accommodate these connections. Refer to *Section*

*IX, Vent Flue Pipe and Combustion Air Pipe* for details. **NOTE:** In addition to the required clearances to combustible materials, a minimum of 36 inches service clearance must be available in front of the unit.

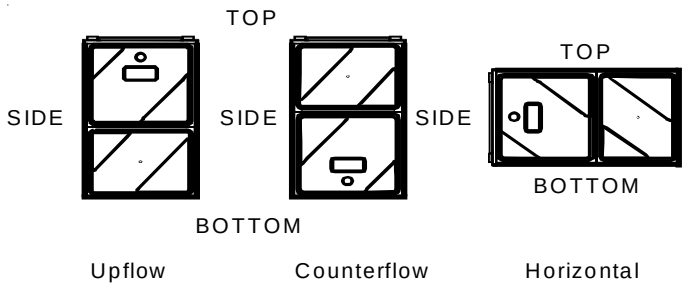


A furnace installed in a confined space (i.e., a closet or utility room) must have two ventilation openings with a total minimum free area of 0.25 square inches per 1,000 BTU/hr of furnace input rating. Refer to Product Data Book applicable to your model* for minimum clearances to combustible surfaces. One of the ventilation openings must be within 12 inches of the top; the other opening must be within 12 inches of the bottom of the confined space. In a typical construction, the clearance between the door and door frame is usually adequate to satisfy this ventilation requirement.

## Furnace Suspension

If suspending the furnace from rafters or joist, use 3/8" threaded rod and 2”x2”x1/8” angle iron as shown below. The length of rod will depend on the application and the clearances necessary.

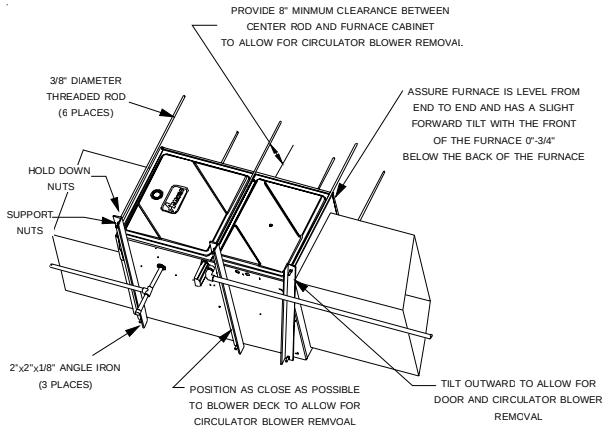


**Suspended Furnace**

## Existing Furnace Removal

**NOTE:** When an existing furnace is removed from a venting system serving other appliances, the venting system may be too large to properly vent the remaining attached appliances.

The following vent testing procedure is reproduced from the **American National Standard/National Standard of Canada for Gas-Fired Central Furnaces ANSI Z21.47-1998, CSA-2.3-M98 Section 1.23.1.**

The following steps shall be followed with each appliance connected to the venting system placed in operation, while any other appliances connected to the venting system are not in operation:

a. Seal any unused openings in the venting system;

b. Inspect the venting system for proper size and horizontal pitch, as required by the National Fuel Gas Code, ANSI Z223.1 or the CSA B149 Installation Codes and these instructions. Determine that there is no blockage or restriction, leakage, corrosion and other deficiencies which could cause an unsafe condition;

c. In so far as practical, close all building doors and windows and all doors between the space in which the appliance(s) connected to the venting system are located and other spaces of the building. Turn on clothes dryers and any appliance not connected to the venting system. Turn on any exhaust fans, such as range hoods and bathroom exhausts, so they shall operate at maximum speed. Do not operate a summer exhaust fan. Close fireplace dampers;

d. Follow the lighting instructions. Place the appliance being inspected in operation. Adjust thermostat so appliance shall operate continuously;

e. Test for draft hood equipped spillage at the draft hood relief opening after 5 minutes of main burner operation. Use the flame of a match or candle;

f. After it has been determined that each appliance connected to the venting system properly vents when tested as outlined above, return doors, windows, exhaust fans, fireplace dampers and any other gas burning appliance to their previous conditions of use;

g. If improper venting is observed during any of the above tests, the common venting system must be corrected.

Corrections must be in accordance with the latest edition of the National Fuel Gas Code NFPA 54/ANSI Z223.1 and/or CSA B149 Installation Codes.

If resizing is required on any portion of the venting system, use the appropriate table in Appendix G in the latest edition of the National Fuel Gas Code ANSI Z223.1 and/or CSA B149 Installation Codes.

## Thermostat Location

In an area having good air circulation, locate the thermostat about five feet high on a vibration-free inside wall. Do not install the thermostat where it may be influenced by any of the following:

- Drafts, or dead spots behind doors, in corners, or under cabinets.
- Hot or cold air from registers.
- Radiant heat from the sun.
- Light fixtures or other appliances.
- Radiant heat from a fireplace.
- Concealed hot or cold water pipes, or chimneys.
- Unconditioned areas behind the thermostat, such as an outside wall.

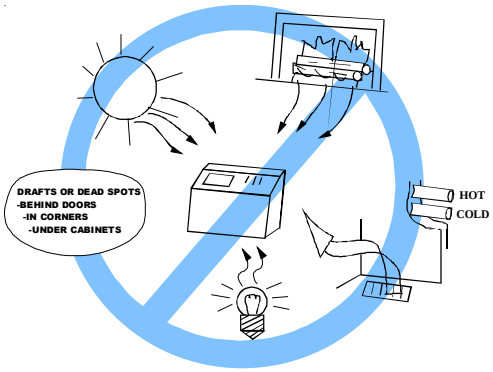


**Thermostat Influences**

Consult the instructions packaged with the thermostat for mounting instructions and further precautions.

*NOTE: Please contact your distributor or our website for the applicable product data book referred to in this manual.

## V. COMBUSTION & VENTILATION AIR REQUIREMENTS

**WARNING**

**POSSIBLE PROPERTY DAMAGE, PERSONAL INJURY OR DEATH MAY OCCUR IF THE FURNACE IS NOT PROVIDED WITH ENOUGH FRESH AIR FOR PROPER COMBUSTION AND VENTILATION OF FLUE GASES. MOST HOMES REQUIRE OUTSIDE AIR BE SUPPLIED TO THE FURNACE AREA.**

Improved construction and additional insulation in buildings have reduced heat loss by reducing air filtration and escape around doors and windows. These changes have helped in reducing heating/cooling costs but have created a problem supplying combustion and ventilation air for gas fired and other fuel burning appliances. Appliances that pull air out of the house (clothes dryers, exhaust fans, fireplaces, etc.) increase the problem by starving appliances for air. House depressurization can cause back drafting or improper combustion of gas-fired appliances, thereby exposing building occupants to gas combustion products that could include carbon monoxide.

If this furnace is to be installed in the same space with other gas appliances, such as a water heater, ensure there is an adequate supply of combustion and ventilation air for the other appliances. Refer to the latest edition of the National Fuel Gas Code NFPA 54/ ANSI Z223.1 (Section 5.3), or CSA B149 Installation Codes (Sections 7.2, 7.3, or 7.4), or applicable provisions of the local building codes for determining the combustion air requirements for the appliances.

Most homes will require outside air be supplied to the furnace area by means of ventilation grilles or ducts connecting directly to the outdoors or spaces open to the outdoors such as attics or crawl spaces.

The following information on air for combustion and ventilation is reproduced from the **National Fuel Gas Code NFPA 54/ANSI Z223.1 Section 5.3.**

**5.3.1 General:**

(a) The provisions of 5.3 apply to gas utilization equipment installed in buildings and which require air for combustion, ventilation and dilution of flue gases from within the building. They do not apply to (1) direct vent equipment which is constructed and installed so that all air combustion is obtained from the outside atmosphere and all flue gases are discharged to the outside atmosphere, or (2) enclosed furnaces which incorporate an integral total enclosure and use only outside air for combustion and dilution of flue gases.

(b) Equipment shall be installed in a location in which the facilities for ventilation permit satisfactory combustion of gas, proper venting and the maintenance of ambient temperature at safe limits under normal conditions of use. Equipment shall be located so as not to interfere with proper circulation of air. When normal infiltration does not provide the necessary air, outside air shall be introduced.

(c) In addition to air needed for combustion, process air shall be provided as required for: cooling of equipment or material, controlling dew point, heating, drying, oxidation or dilution, safety exhaust, odor control, and air for compressors.

(d) In addition to air needed for combustion, air shall be supplied for ventilation, including all air required for comfort and proper working conditions for personnel.

(e) While all forms of building construction cannot be covered in detail, air for combustion, ventilation and dilution of flue gases for gas utilization equipment vented by natural draft normally may be obtained by application of one of the methods covered in 5.3.3 and 5.3.4.

(f) Air requirements for the operation of exhaust fans, kitchen ventilation systems, clothes dryers, and fireplaces shall be considered in determining the adequacy of a space to provide combustion air requirements.

**5.3.2 Equipment Located in Unconfined Spaces:**

In unconfined spaces (see definition below) in buildings, infiltration may be adequate to provide air for combustion ventilation and dilution of flue gases. However, in buildings of tight construction (for example, weather stripping, heavily insulated, caulked, vapor barrier, etc.), additional air may need to be provided using the methods described in 5.3.3-b or 5.3.4.

**Space, Unconfined.**

For purposes of this Code, a space whose volume is not less than 50 cubic feet per 1,000 BTU per hour of the aggregate input rating of all appliances installed in that space. Rooms communicating directly with the space in which the appliances are installed through openings not furnished with doors, are considered a part of the unconfined space.

**5.3.3 Equipment Located in Confined Spaces:**

(a) *All Air from Inside the Building:* The confined space shall be provided with two permanent openings communicating directly with an additional room(s) of sufficient volume so that the combined volume of all spaces meets the criteria for an unconfined space. The total input of all gas utilization equipment installed in the combined space shall be considered in making this determination. Each opening shall have a minimum free area of 1 square inch per 1,000 BTU per hour of the total input rating of all gas utilization equipment in the confined space, but not less than 100 square inches. One opening shall be within 12 inches of the top and one within 12 inches of the bottom of the enclosure.

**NOTE: Each opening must have a free area of not less than one square inch per 1000 BTU of the total input rating of all equipment in the enclosure, but not less than 100 square inches.**

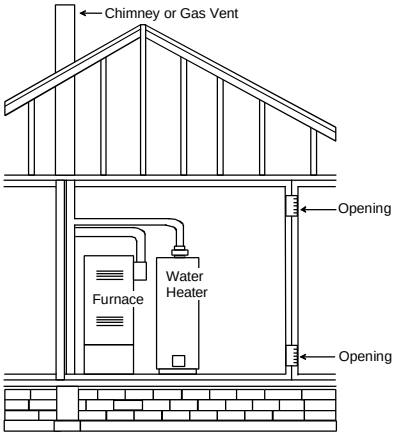


**Equipment Located in Confined Spaces; All Air from Inside Building. See 5.3.3-a.**

(b) *All Air from Outdoors:* The confined space shall be provided with two permanent openings, one commencing within 12 inches of the top and one commencing within 12 inches of the bottom of the enclosure. The openings shall communicate directly, or by ducts, with the outdoors or spaces (crawl or attic) that freely communicate with the outdoors.

1. When directly communicating with the outdoors, each opening shall have a minimum free area of 1 square inch per 4,000 BTU per hour of total input rating of all equipment in the enclosure.

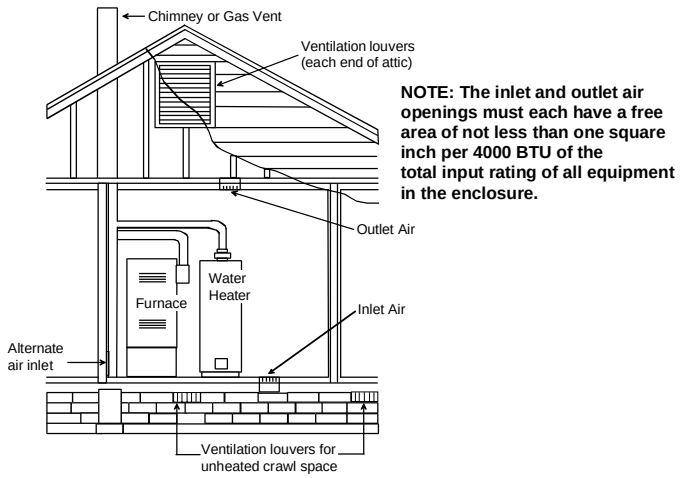


**Equipment Located in Confined Spaces; All Air from Outdoors—Inlet Air from Ventilated Crawl Space and Outlet Air to Ventilated Attic. See 5.3.3-b**

2. When communicating with the outdoors through vertical ducts, each opening shall have a minimum free area of 1 square inch per 4,000 BTU per hour of total input rating of all equipment in the enclosure.

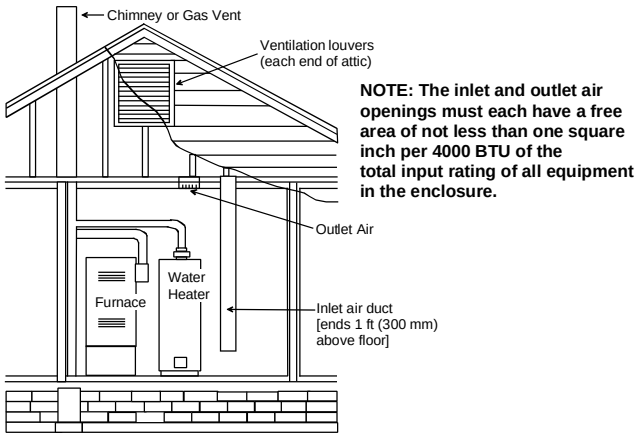


**Equipment Located in Confined Spaces; All Air from Outdoors Through Ventilated Attic. See 5.3.3-b.**

3. When communicating with the outdoors through horizontal ducts, each opening shall have a minimum free area of 1 square inch per 2,000 BTU per hour of total input rating of all equipment in the enclosure.

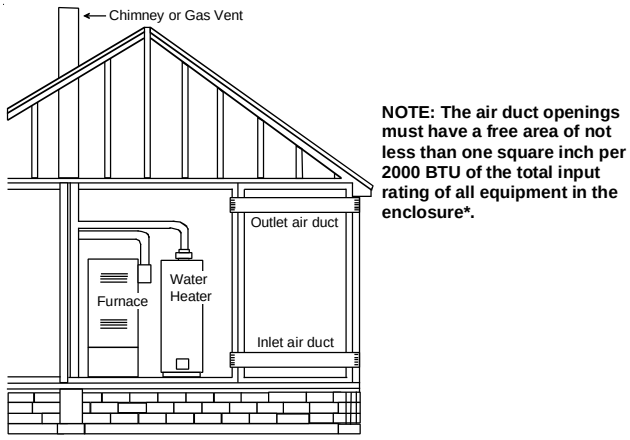


*If the appliance room is located against an outside wall and the air openings communicate directly with the outdoors, each opening shall have a free area of not less than one square inch per 4,000 BTU per hour of the total input rating of all appliances in the enclosure.

**Equipment Located in Confined Spaces; All Air from Outdoors. See 5.3.3-b.**

4. When ducts are used, they shall be of the same cross-sectional area as the free area of the openings to which they connect. The minimum dimension of rectangular air ducts shall not be less than 3 inches.

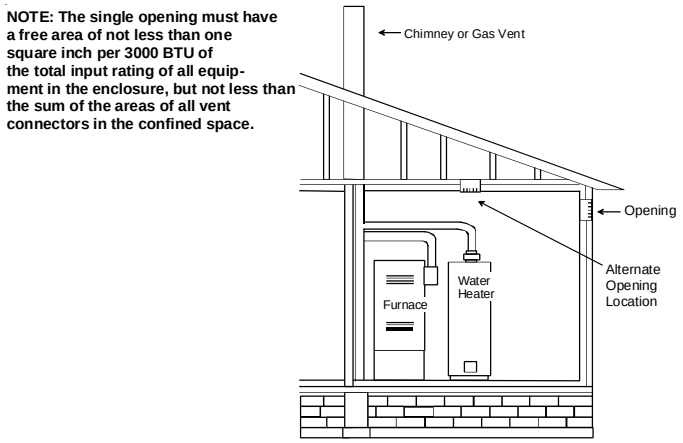


**Equipment Located in Confined Spaces; All Air from Outdoors - Single Air Opening. See 5.3.3-b.**

5. When directly communicating with the outdoors, the single opening shall have a minimum free area of 1 square inch per 3,000 BTU per hour of total input rating of all equipment in the enclosure.

**5.3.4 Specially Engineered Installations:**

The requirements of 5.3.3 shall not necessarily govern when special engineering, approved by the authority having jurisdiction, provides an adequate supply of air for combustion, ventilation, and dilution of flue gases.

**5.3.5 Louvers and Grilles:**

In calculating free area in 5.3.3, consideration shall be given to the blocking effect of louvers, grilles or screens protecting openings. Screens used shall not be smaller than 1/4 inch mesh. If the area through a design of louver or grille is known, it should be used in calculating the size of opening required to provide the free area specified. If the design and free area is not known, it may be assumed that wood louvers will have 20-25 percent free area and metal louvers and grilles will have 60-75 percent free area. Louvers and grilles shall be fixed in the open position or interlocked with the equipment so that they are opened automatically during equipment operation.

**5.3.6 Special Conditions Created by Mechanical Exhausting or Fireplaces:**

Operation of exhaust fans, ventilation systems, clothes dryers, or fireplaces may create conditions requiring special attention to avoid unsatisfactory operation of installed gas utilization equipment. Air from Inside Building. See 5.3.3-a.

## VI. INSTALLATION POSITIONS

This furnace may be installed in an upright position or horizontal on either the left or right side panel. Do not install this furnace on its back. For *upright upflow* furnaces, return air ductwork may be attached to the side panel(s) and/or basepan. For *horizontal upflow* furnaces, return air ductwork must be attached to the basepan. For both *upright or horizontal counterflow* furnaces, return ductwork must be attached to the basepan (top end of the blower compartment). **NOTE:** Ductwork must never be attached to the back of the furnace. Contact your distributor for proper airflow requirements and number of required ductwork connections. Refer to "Recommended Installation Positions" figure for appropriate installation positions, ductwork connections, and resulting airflow arrangements.

## VII. HORIZONTAL APPLICATIONS & CONSIDERATIONS

### General

Horizontal applications, in particular, may dictate many of the installation's specifics such as airflow direction, ductwork connections, flue and combustion air pipe connections, etc. The basic application of this furnace as a horizontal furnace differs only slightly from an upright installation. When installing a furnace horizontally, additional consideration must be given to the following:

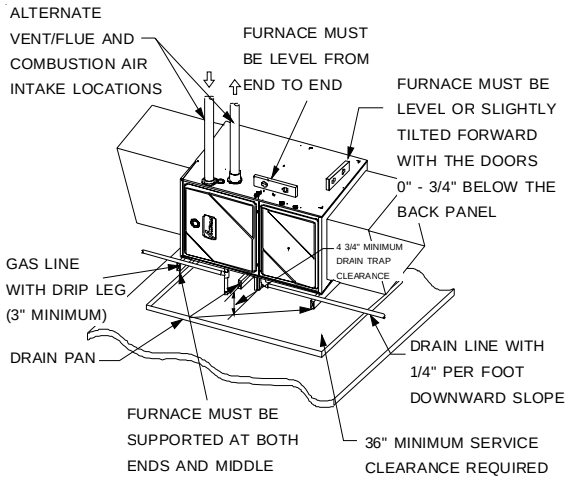


**Horizontal Furnace**

### Drain Trap and Lines

In horizontal applications the condensate drain trap is secured to the furnace side panel, suspending it below the furnace. A minimum clearance of 4 3/4 inches below the furnace must be provided for the drain trap. Additionally, the appropriate downward piping slope must be maintained from the drain trap to the drain location. Refer to *Section X, Condensate Drain Trap and Lines* for further details. If the drain trap and drain line will be exposed to temperatures near or below freezing, adequate measures must be taken to prevent condensate from freezing.

**NOTE:** The use of insulation and/or heat tape is recommended. Failure to provide proper condensate drainage can result in property damage.

### Leveling

Leveling ensures proper condensate drainage from the heat exchanger and induced draft blower. For proper flue pipe drainage, the furnace must be level lengthwise from end to end. The furnace should also be level from back to front or have a slight tilt with the access doors downhill (approximately 3/4 inches) from the back panel. The slight tilt allows the heat exchanger condensate, generated in the recuperator coil, to flow forward to the recuperator coil front cover.

### Alternate Vent/Flue and Combustion Air Connections

In horizontal installations provisions for alternate flue and combustion air piping are available for upflow furnaces with left discharge and counterflow furnaces with right air discharge. In these positions the flue and combustion air piping can be run vertically through the side of the furnace. Refer to the "Recommended Installation Positions" figure for further detail. The standard piping connections may also be used in these positions. Refer to *Section IX, Vent/Flue Pipe* and Combustion Air Pipe for details concerning the conversion to the alternate vent/flue and combustion air connections.

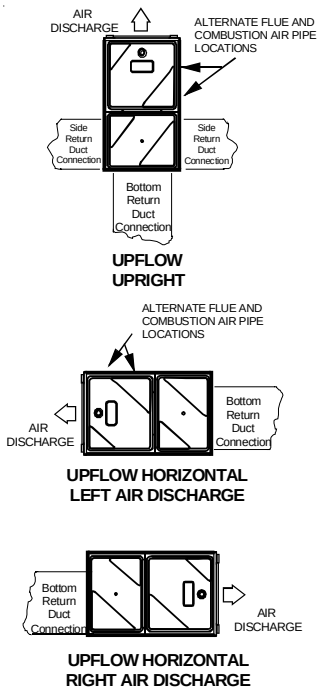


**Recommended Installation Positions**

**NOTE:** Alternate "vertical" piping connections can not be used when an upflow furnace is installed with supply air discharging to the right, or when a counterflow furnace is installed with supply air discharging to the left. In either case, use the standard flue and combustion air piping connections.

### Alternate Electrical and Gas Line Connections

This furnace has provisions allowing for electrical and gas line connections through either side panel. In horizontal applications the connections can be made either through the "top" or "bottom" of the furnace.

### Drain Pan

A drain pan must be provided if the furnace is installed above a conditioned area. The drain pan must cover the entire area under the furnace (and air conditioning coil if applicable).

### Freeze Protection

Refer to *Section VI, Horizontal Applications and Conditions - Drain Trap and Lines.*

### Furnace Suspension

If the furnace is installed in a crawl space it must be suspended from the floor joist or supported by a concrete pad. Never install the furnace on the ground or allow it to be exposed to water. Refer to *Section IV, Location Requirements and Considerations - Furnace Suspension* for further details.

## VIII. PROPANE GAS /HIGH ALTITUDE INSTALLATIONS

**⚠ WARNING**

**POSSIBLE PROPERTY DAMAGE, PERSONAL INJURY OR DEATH MAY OCCUR IF THE CORRECT CONVERSION KITS ARE NOT INSTALLED. THE APPROPRIATE KITS MUST BE APPLIED TO INSURE SAFE AND PROPER FURNACE OPERATION. ALL CONVERSIONS MUST BE PERFORMED BY A QUALIFIED INSTALLER OR SERVICE AGENCY.**

This furnace is shipped from the factory configured for natural gas at standard altitude. Propane gas installations require an orifice change to compensate for the energy content difference between natural and propane gas.

High altitude installations may require both a pressure switch and an orifice change. These changes are necessary to compensate for the natural reduction in the density of both the gas fuel and the combustion air at higher altitude.
For installations above 7000 feet, please refer to your distributor for required kit(s).

| Gas | Altitude | Kit | Orifice | Manifold Pressure | | Pressure Switch Change |
|---|---|---|---|---|---|---|
| | | | | High Stage | Low Stage | |
| Natural | 0-7000 | None | #43 | 3.5" w.c. | 1.9" w.c. | None |
| Propane | | LPTK09 | #55 | 10.0" w.c. | 6.0" w.c. | None |

**NOTE:** In Canada, gas furnaces are only certified to 4500 feet.

Contact an distributor for a tabular listing of appropriate manufacturer's kits for propane gas and/or high altitude installations. The indicated kits must be used to insure safe and proper furnace operation. All conversions must be performed by a qualified installer, or service agency.

## IX. VENT/FLUE PIPE & COMBUSTION AIR PIPE

### General

**WARNING**

**Failure to follow these instructions can result in bodily injury or death. Carefully read and follow all instructions given in this section.**

**WARNING**

**Upon completion of the furnace installation, carefully inspect the entire flue system both inside and outside the furnace to assure it is properly sealed. Leaks in the flue system can result in serious personal injury or death due to exposure to flue products, including carbon monoxide.**

A condensing gas furnace achieves its high level of efficiency by extracting almost all of the heat from the products of combustion and cooling them to the point where condensation takes place. Because of the relatively low flue gas temperature and water condensation requirements, PVC pipe is used as venting material.
This furnace must not be connected to Type B, BW, or L vent or vent connector, and must not be vented into any portion of a factory built or masonry chimney except when used as a pathway for PVC as described later in this section. Never common vent this appliance with another appliance or use a vent which is used by a solid fuel appliance. Do not use commercially available "no hub connectors" other than those shipped with this product.
It is the responsibility of the installer to follow the manufacturers' recommendations and to verify that all vent/flue piping and connectors are compatible with furnace flue products. Additionally, it is the responsibility of the installer to ensure that all piping and connections possess adequate structural integrity and support to prevent flue pipe separation, shifting, or sagging during furnace operation.

### Dual Certification: Non-Direct/Direct Vent

This furnace is dual certified and may be installed as a non-direct vent (single pipe) or direct vent (dual pipe) appliance. A *non-direct vent* installation requires only a vent/flue pipe, while a *direct vent* installation requires both a vent/flue pipe and a combustion air intake pipe. Refer to the appropriate section for details concerning piping size, length, number of elbows, furnace connections, and terminations.

### Materials and Joining Methods

**WARNING**

**To avoid bodily injury, fire or explosion, solvent cements must be kept away from all ignition sources (i.e., sparks, open flames, and excessive heat) as they are combustible liquids. Avoid breathing cement vapors or contact with skin and/or eyes.**

Two- or three-inch nominal diameter PVC Schedule 40 pipe meeting ASTM D1785, PVC primer meeting ASTM F656, and PVC solvent cement meeting ASTM D2564 specifications must be used. Fittings must be DWV type fittings meeting ASTM D2665 and ASTM D3311. Carefully follow the manufacturer's instructions for cutting, cleaning, and solvent cementing of PVC.
As an alternative to PVC pipe, primer, solvent cement, and fittings, ABS materials which are in compliance with the following specifications may be used. Two-or-three-inch ABS Schedule 40 pipe must meet ASTM D1527 and, if used in Canada, must be CSA listed. Solvent cement for ABS to ABS joints must meet ASTM D2235 and, if used in Canada, must be CSA listed. The solvent cement for the PVC to ABS transition joint must meet ASTM D3138. Fittings must be DWV type fittings meeting ASTM D2661 and ASTM D3311 and, if used in Canada, must be CSA listed. Carefully follow the manufacturers' instructions for cutting, cleaning, and solvent cementing PVC and/or ABS.
All 90° elbows must be medium radius (1/4 bend DWV) or long radius (Long sweep 1/4 bend DWV) types conforming to ASTM D3311. A medium radius (1/4 bend DWV) elbow measures 3 1/16" minimum from the plane of one opening to the centerline of the other opening for 2" diameter pipe, and 4 9/16" minimum for 3" pipe.

### Proper Vent/Flue and Combustion Air Piping Practices

Adhere to these instructions to ensure safe and proper furnace performance. The length, diameter, and number of elbows of the vent/flue pipe and combustion air pipe (when applicable) affects the performance of the furnace and must be carefully sized. All piping must be installed in accordance with local codes and these instructions.
Piping must be adequately secured and supported to prohibit sagging, joint separation, and/or detachment from the furnace. Horizontal runs of vent/flue piping must be supported every three feet and must maintain a 1/4 inch per foot downward slope, back towards the furnace, to properly return condensate to the furnace's drain system. Allowances should be made for minor expansion and contraction due to temperature variations. For this reason, particular care must be taken to secure piping when a long run is followed by a short offset of less than 40 inches.
Precautions should be taken to prevent condensate from freezing inside the vent/flue pipe and/or at the vent/flue pipe termination. All vent/flue piping exposed to freezing temperatures below 35°F for extended periods of time must be insulated with 1/2" thick closed cell foam. Also all vent/flue piping exposed outdoors in excess of the terminations shown in this manual (or in unheated areas) must be insulated with 1/2" thick closed cell foam. Inspect piping for leaks prior to installing insulation.

### Termination Locations

**NOTES:** Refer to *Section IV, Location Requirements and Considerations* for combustion air contaminant restrictions.

The following bullets and diagram describe the restrictions concerning the appropriate location of vent/flue pipe and combustion air intake pipe (when applicable) terminations. Refer to *Non-Direct Vent (Single Pipe) Piping* and *Direct Vent (Dual Pipe) Piping* located in this section for specific details on termination construction.

- All terminations (flue and/or intake) must be located at least 12 inches above ground level or the anticipated snow level.
- Vent terminations (non-direct and direct vent) must terminate at least 3 feet above any forced air inlet located within 10 feet.

  **NOTE: This provision does not apply to the combustion air intake termination of a direct vent application.**
- The vent termination of a *non-direct vent* application must terminate at least 4 feet below, 4 feet horizontally from, or 1 foot above any door, window, or gravity air inlet into any building.
- The vent termination of a *direct vent* application must terminate at least 12 inches from any opening through which flue gases may enter a building (door, window, or gravity air inlet).
- The vent termination of vent pipe run vertically through a roof must terminate at least 12 inches above the roof line (or the anticipated snow level) and be at least 12 inches from any vertical wall (including any anticipated snow build up).
- A vent termination shall not terminate over public walkways or over an area where condensate or vapor could create a nuisance or hazard or could be detrimental to the operation of regulators, relief valves, or other equipment.
- The combustion air intake termination of a direct vent application should not terminate in an area which is frequently dusty or dirty.

**NOTE:** In Canada, the Canadian Fuel Gas Code takes precedence over the preceding termination restrictions.

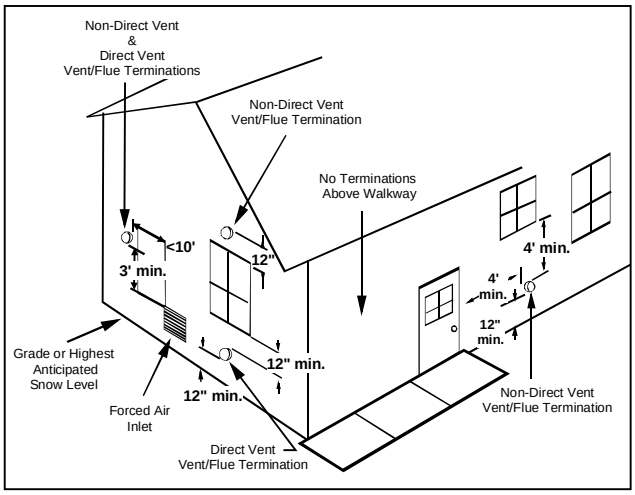


**Vent Termination Clearances**

## Canadian Venting Requirements

In Canada, venting must conform to the requirements of the current CAN/CSA-B149 Installation Code. Use only CSA listed two or three inch diameter PVC or ABS pipe, solvent cement, and fittings throughout. Carefully follow the manufacturers' instructions for cutting, cleaning, and solvent cementing PVC and/or ABS.

The vent can be run through an existing unused chimney provided the space between the vent pipe and the chimney is insulated and closed with a weather-tight, corrosion-resistant flashing.

The vent shall *not* be located:

- Less than. 12 inches above the finished grade line.
- Less than 36 inches from any building opening or any gas service regulator. For gas service regulators in the Province of Ontario, 72 inches.
- Less than 72 inches from the combustion air intake of another appliance.
- Directly above a gas utility meter or service regulator.
- Over a walkway unless located 84 inches above grade.

## Standard Furnace Connections

It is the responsibility of the installer to ensure that the piping connections to the furnace are secure, airtight, and adequately supported.

As shipped, attachment "couplings" for vent/flue and combustion air intake pipe connections are provided on the furnace's top cover (upflow) or basepan (counterflow). To use the standard connections, field supplied vent/flue pipe and combustion air intake pipe (when applicable) should be secured directly to the furnace at these locations.

### *Vent/Flue Pipe*

Vent/flue pipe can be secured to the vent/flue coupling using the rubber coupling and worm gear hose clamps provided with this furnace (see "Standard Connections" figure). The rubber coupling allows separation of the vent/flue pipe from the furnace during servicing. **NOTE:** Do not use other commercially available "no hub connectors" due to possible material conflicts. The vent/flue pipe can also be secured using a PVC or ABS elbow or coupling using the appropriate glue (see *Section IX, Materials and Joining Methods*.

**NOTE: For *non-direct vent* installations, a minimum of one 90° elbow must be installed on the combustion air intake coupling to guard against inadvertent blockage.**

### *Combustion Air Pipe*

*Direct Vent Installations*

On *upflow* units secure the combustion air intake pipe directly to the air intake coupling. On *counterflow* units secure the combustion air intake pipe to the air intake coupling using the rubber coupling and worm gear hose clamps provided with the unit. The counterflow rubber coupling allows service removal of air intake piping internal to the furnace blower compartment. **NOTE:** Because of probable material conflicts, do not use other commercially available "no hub connectors". The combustion air intake pipe can also be secured directly to the counterflow unit air intake pipe coupling.

*Non-Direct Vent Installations*

A minimum of one 90° elbow must be installed on the combustion air intake "coupling" to guard against inadvertent blockage.

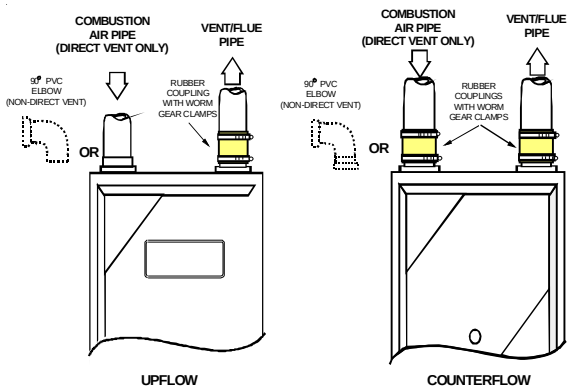


**Standard Connections**

## Alternate Furnace Connections

If the standard locations are undesirable for a specific installation, alternate side panel locations are available for both combustion air inlet and vent/flue pipe connections. These locations may be of particular benefit to upright upflow installations requiring additional access to an **A** coil, or to upright counterflow installations requiring

additional access to a filter or electronic air cleaner, or to horizontal installations desiring vent/flue (and combustion air intake) piping run vertically from the side of the cabinet.

**NOTE:** Standard and alternate locations can be combined (i.e., an installation may use the standard combustion air intake location but use the alternate vent/flue location or vice versa), if needed.

**WARNING**

**EDGES OF SHEET METAL HOLES MAY BE SHARP. USE GLOVES AS A PRECAUTION WHEN REMOVING HOLE PLUGS.**

### *ALTERNATE VENT/FLUE LOCATION*

The alternate vent/flue location is the large hole directly in line with the induced draft blower outlet. To use the alternate vent/flue location refer to the following steps, the "Vent/Flue Pipe Cuts" figure, and the "Alternate Vent/Flue Location" figure.

**NOTE:** Counterflow instructions follow the upflow instructions.

1. Remove and save the four screws securing the vent/flue coupling to the furnace top panel.

   *Counterflow* units.

   Remove and save the four screws securing the vent/flue coupling to the furnace basepan. Also remove the three screws securing the furnace's internal vent/flue piping to the blower deck.
2. *Upflow* and *Counterflow* units.

   Loosen the worm gear hose clamps on the rubber elbow and detach it from both the induced draft blower and the vent/flue pipe.
3. *Upflow* and *Counterflow* units.

   Remove the vent/flue pipe from the furnace.
4. Cut the vent/ flue pipe at the elbow nearest the coupling end of the pipe (see " Vent/Flue Pipe Cuts" figure). The section of pipe attached to the coupling will reach through the side panel to the induced draft blower. Discard unused pipe and elbows.

   *Counterflow* units.

   Cut the vent/flue pipe 3.718 inches from the blower deck coupling (see "Vent/Flue Pipe Cuts" figure). Save vent/flue pipe attached to blower deck coupling for use in the alternate location. Discard remaining pipe and elbows.

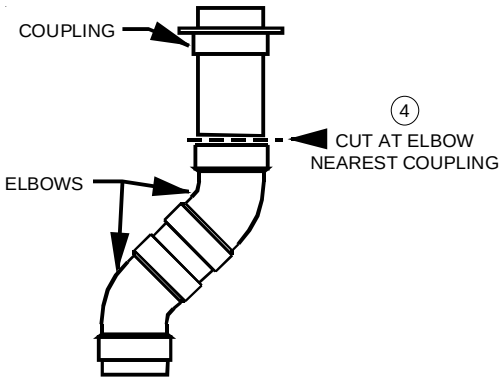


**UPFLOW**

**Vent/Flue Pipe Cuts**

5. Remove plastic plug from alternate vent/flue location. Relocate and install plug in standard vent/flue location (top cover).

   *Counterflow* units.

   Remove plastic plug from alternate vent/flue location. Relocate and install plug in standard vent/flue location (basepan). Plug remaining hole in blower deck with plastic plug included in the drain kit bag.
6. *Upflow* and *Counterflow* units.

   Insert cut section of vent/flue pipe and coupling into alternate vent/flue location. Using a rubber coupling and worm gear hose clamps from the drain kit bag, attach the vent/flue pipe and coupling to the induced draft blower. Secure the coupling to the cabinet using the screws removed in step 1 or with field-supplied 3/8" #8 self drilling screws.

**WARNING**

**THE RUBBER ELBOW IS NOT DESIGNED TO SUPPORAT A LOAD. WHEN THE RUBBER ELBOW IS MOUNTED EXTERNALLY TO THE FURNACE CABINET, EXTREME CARE MUST BE TAKEN TO ADEQUATELY SUPPORT FIELD-SUPPLIED VENT/FLUE PIPING. AS DAMAGE CAN RESULT IN LEAKS CAUSING BODILY INJURY OR DEATH DUE TO EXPOSURE TO FLUE GASES, INCLUDING CARBON MONOXIDE.**

7. *Upflow* and *Counterflow* units.

   For **upright installations**, externally mount the rubber elbow to the vent/flue coupling using a worm gear hose clamp. Secure field supplied vent/flue piping to the rubber elbow using a worm gear hose clamp. **NOTE:** Use of the alternate vent/flue location for upright installations, requires the drain trap be installed on the same side of the unit as the flue pipe.
8. *Upflow* and *Counterflow* units.

   For ***horizontal installations***, externally secure the field-supplied vent/flue pipe directly to the vent/flue coupling using a PVC or ABS coupling or elbow.

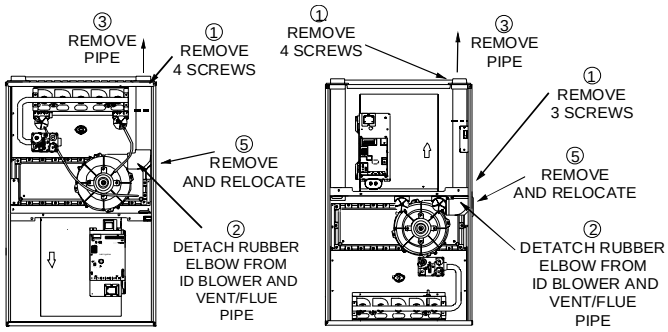


UPFLOW COUNTERFLOW

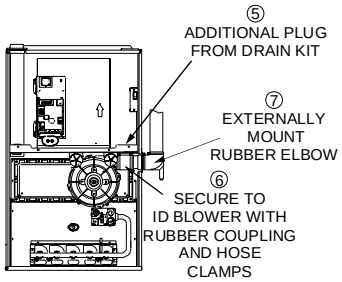


COUNTERFLOW/UPRIGHT
(UPFLOW SIMILAR)

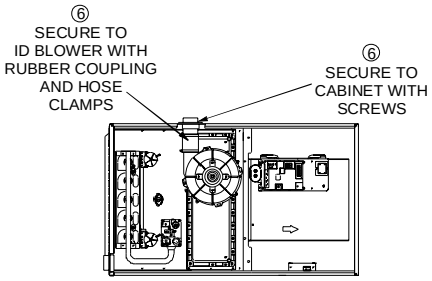


UPFLOW/HORIZONTAL
(COUNTERFLOW SIMILAR)

**Alternate Vent/Flue Location**

### *Alternate Combustion Air Intake Location*

The alternate combustion air intake location is the large hole ***not*** in line with the induced draft blower outlet. To use the alternate combustion air intake location, refer to the following steps, and the "Alternate Combustion Air Intake Location" figure.

**NOTE:** Counterflow unit instructions follow the upflow instructions.

1. Remove and save the four screws securing the combustion air intake coupling to the furnace's top panel (upflow).

   *Counterflow* units.

   Remove and save the four screws securing the combustion air intake coupling to the basepan. Remove an additional three screws securing the furnace's internal combustion air intake pipe to the blower deck.
2. Remove the combustion air intake coupling and gasket from the top panel.

   *Counterflow* units.

   Remove the combustion air intake pipe from the furnace and cut the pipe at the basepan coupling. Save the basepan coupling and gasket from the blower deck coupling for use in the alternate location. Discard the remaining pipe.
3. Remove plastic plug from alternate combustion air intake location. Relocate and install plug in standard air intake location (top cover).

   *Counterflow* units.

   Remove plastic plug from alternate combustion air intake location. Relocate and install plug in standard air intake location (basepan). Plug the remaining hole in the blower deck with the plastic plug included in the drain kit bag.
4. *Upflow* and *Counterflow* units.

   With the gasket facing the cabinet side panel, and the flange's flat spot facing forward, secure the combustion air intake coupling to the cabinet using the screws removed in step 1 or with field-supplied 3/8" #8 self -drilling screws.

**⚠ CAUTION**

**Be sure not to damage internal wiring or other components when reinstalling coupling and screws.**

5. *Upflow* and *Counterflow* units.

   For ***non-direct vent installation***s installed *horizontally*, a minimum of one 90° elbow must be installed on the combustion air intake coupling to guard against inadvertent blockage. No elbow is required on the alternate combustion air intake of *upright* installations, however, a minimum clearance of 2 inches is required to assure proper air supply.
6. *Upflow* and *Counterflow* units.

   For ***direct vent installations***, secure field-supplied combustion air intake pipe directly to the air intake coupling.

   **NOTE:** A PVC coupling or elbow is required on counterflow units.

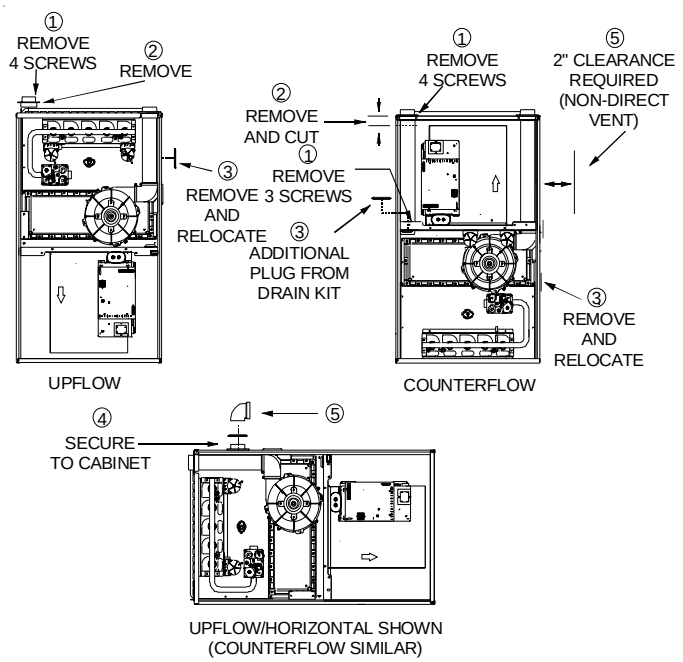


**Alternate Combustion Air Intake Location**

## Non-Direct Vent (Single Pipe) Piping

*Non-direct vent* installations require only a vent/flue pipe. The vent pipe can be run horizontally with an exit through the side of the building or run vertically with an exit through the roof of the building. The vent can also be run through an existing *unused* chimney; however, it must extend a minimum of 12 inches above the top of the chimney. The space between the vent pipe and the chimney must be closed with a weather-tight, corrosion-resistant flashing. For details concerning connection of the vent/flue pipe to the furnace, refer to *Section IX, Vent/Flue Pipe and Combustion Air - Standard Furnace Connections or Alternate Furnace Connections* for specific details. Refer to the following *Non-Direct Vent (Single Pipe) Piping - Vent/Flue Pipe Terminations* for specific details on termination construction.

Although *non-direct vent* installations do not require a combustion air intake *pipe*, a minimum of one 90° elbow must be attached to the furnace's combustion air intake *if*: an upright installation uses the standard intake location, or a horizontal installation uses the alternate air intake location. This elbow will guard against inadvertent blockage of the air intake.

### *Vent/Flue Pipe Lengths and Diameters*

Refer to the following table for applicable length, elbows, and pipe diameter for construction of the vent/flue pipe system of a non-direct vent installation. In addition to the vent/flue pipe, a single 90° elbow must be secured to the combustion air intake to prevent inadvertent blockage. The tee used in the vent/flue termination must be included when determining the number of elbows in the piping system.

| GUVA Models | | | | | | | | | |
|---|---|---|---|---|---|---|---|---|---|
| **Non-Direct Vent (Single Pipe)** Maximum Allowable Length of Vent/Flue Pipe (ft) (1) (2) | | | | | | | | | |
| Unit Input | Pipe(4) (inch) | Number of Elbows (3) | | | | | | | |
| | | 1 | 2 | 3 | 4 | 5 | 6 | 7 | 8 |
| 45,000 | 2 | 71 | 68 | 65 | 62 | 59 | 56 | 53 | 50 |
| 70,000 | 2 | 49 | 46 | 43 | 40 | 37 | 34 | 31 | 28 |
| | 3 | 71 | 68 | 65 | 62 | 59 | 56 | 53 | 50 |
| 90,000 | 3 | 71 | 68 | 65 | 62 | 59 | 56 | 53 | 50 |
| 115,000 | 3 | 49 | 46 | 43 | 40 | 37 | 34 | 31 | 28 |

| GCVA Models | | | | | | | | | |
|---|---|---|---|---|---|---|---|---|---|
| **Non-Direct Vent (Single Pipe)** Maximum Allowable Length of Vent/Flue Pipe (ft) (1) (2) | | | | | | | | | |
| Unit Input | Pipe(4) (inch) | Number of Elbows (3) | | | | | | | |
| | | 1 | 2 | 3 | 4 | 5 | 6 | 7 | 8 |
| 70,000 | 2 | 61 | 58 | 55 | 52 | 49 | 46 | 43 | 40 |
| | 3 | 71 | 68 | 65 | 62 | 59 | 56 | 53 | 50 |
| 90,000 | 2 | 61 | 58 | 55 | 52 | 49 | 46 | 43 | 40 |
| | 3 | 71 | 68 | 65 | 62 | 59 | 56 | 53 | 50 |

(1) One 90° elbow must be secured to the combustion air intake connection.
(2) Minimum vent length is five feet and one elbow/tee.
(3) Tee used in the vent/flue termination must be included when determining the number of elbows in the piping system.
(4) 3" diameter pipe can be used in place of 2" diameter pipe.

### *Vent/Flue Pipe Terminations*

The vent/flue pipe may terminate vertically, as through a roof, or horizontally, as through an outside wall.

Vertical vent/flue pipe terminations should be as shown in the following figure. Refer to *Section IX, Vent/Flue Pipe and Combustion Air Pipe - Termination Locations* for details concerning location restrictions. The penetration of the vent through the roof must be sealed tight with proper flashing such as is used with a plastic plumbing vent.

Horizontal vent/flue pipe terminations should be as shown in the following figure. Refer to *Section IX, Vent/Flue Pipe and Combustion Air Pipe - Termination Locations* for details concerning location restrictions. A 2 3/8" diameter wall penetration is required for 2" diameter pipe while a 3 1/2" diameter hole is required for 3" diameter pipe. To secure the pipe passing through the wall and prohibit damage to piping connections, a coupling should be installed on either side of the wall and solvent cemented to a length of pipe connecting the two couplings. The length of pipe should be the wall thickness plus the depth of the socket fittings to be installed on the inside and outside of the wall. The wall penetration should be sealed with silicone caulking material.

In a basement installation, the vent/flue pipe can be run between joist spaces. If the vent pipe must go below a joist and then up into the last joist space to penetrate the header, two 45° elbows should be used to reach the header rather than two 90° elbows.

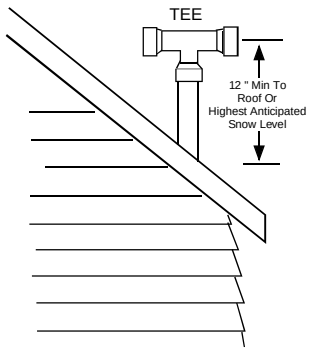


**Vertical Termination (Single Pipe)**

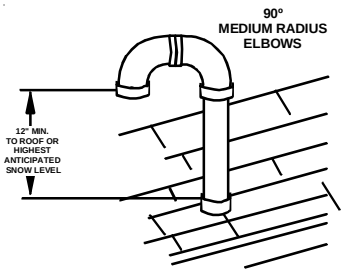


**Alternate Vertical Termination (Single Pipe)**

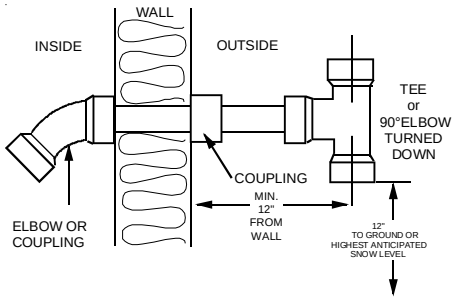


**Horizontal Termination (Single Pipe)**

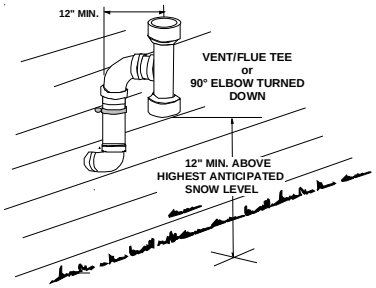


**Horizontal Termination (Single Pipe)**
**Above Highest Anticipated Snow Level**

### *Direct Vent (Dual Pipe) Piping*

The inlet air screens provided in the installation instruction packet are available for the installer to use in the inlet of the combustion air pipe to prevent animals from building nests in the combustion air pipe. The installation of the screens is not a requirement and will not effect performance if not installed in the combustion air pipe.

*Direct vent* installations require both a combustion air intake and a vent/flue pipe. The pipes may be run horizontally and exit through the side of the building or run vertically and exit through the roof of the building. The pipes may be run through an existing *unused* chimney; however, they must extend a minimum of 12 inches above the top of the chimney. The space between the pipes and the chimney must be closed with a weather tight, corrosion resistant flashing. Both the combustion air intake and a vent/flue pipe terminations must be in the same atmospheric pressure zone. Refer to *Section IX, Vent/Flue and Combustion Air Pipe - Termination Locations or Concentric Vent Termination* for specific details on termination construction. For details concerning connection of pipes to the furnace, refer to the *Section IX, Vent/Flue Pipe and Combustion Pipe - Standard Furnace Connections or Alternate Furnace Connections.*

### *Vent/Flue and Combustion Air Pipe Lengths and Diameters*

Refer to the following table for applicable length, elbows, and pipe diameter for construction of the vent/flue and combustion air intake pipe systems of a direct vent (dual pipe) installation. The number of elbows tabulated represents the number of elbows and/or tees in each (Vent/Flue & Combustion Air Intake) pipe. Elbows and/or tees used in the terminations must be included when determining the number of elbows in the piping systems.

If the combustion air intake pipe is to be installed above a finished ceiling or other area where dripping of condensate will be objectionable, insulation of the combustion air pipe may be required. Use 1/2" thick closed cell foam insulation such as Armaflex™ or Insultube™ where required.

| GUVA Models | | | | | | | | | | |
|---|---|---|---|---|---|---|---|---|---|---|
| **Direct Vent (Dual Pipe)** Maximum Allowable Length of Vent/Flue & Combustion Air Intake Pipe (ft) | | | | | | | | | | |
| Unit Input (Btu) | Termination Style | Pipe Size (inch)[4] | Number of Elbows [(1) (2) (3)] | | | | | | | |
| | | | 1 | 2 | 3 | 4 | 5 | 6 | 7 | 8 |
| 45,000 | Standard | 2 | 71 | 68 | 65 | 62 | 59 | 56 | 53 | 50 |
| | Alternate | 2 | 58 | 55 | 52 | 49 | 46 | 43 | 40 | 37 |
| 70,000 | Standard | 2 | 49 | 46 | 43 | 40 | 37 | 34 | 31 | 28 |
| | | 3 | 71 | 68 | 65 | 62 | 59 | 56 | 53 | 50 |
| | Alternate | 2 | 36 | 33 | 30 | 27 | 24 | 21 | 18 | 15 |
| | | 3 | 57 | 54 | 51 | 48 | 45 | 42 | 39 | 36 |
| 90,000 | Standard | 3 | 71 | 68 | 65 | 62 | 59 | 56 | 53 | 50 |
| | Alternate | 3 | 57 | 54 | 51 | 48 | 45 | 42 | 39 | 36 |
| 115,000 | Standard | 3 | 49 | 46 | 43 | 40 | 37 | 34 | 31 | 28 |
| | Alternate | 3 | 35 | 32 | 29 | 26 | 23 | 20 | 17 | 14 |

| GCVA Models | | | | | | | | | | |
|---|---|---|---|---|---|---|---|---|---|---|
| **Direct Vent (Dual Pipe)** Maximum Allowable Length of Vent/Flue & Combustion Air Intake Pipe (ft) | | | | | | | | | | |
| Unit Input (Btu) | Termination Style | Pipe Size (inch)[4] | Number of Elbows [(1) (2) (3)] | | | | | | | |
| | | | 1 | 2 | 3 | 4 | 5 | 6 | 7 | 8 |
| 70,000 | Standard | 2 | 49 | 46 | 43 | 40 | 37 | 34 | 31 | 28 |
| | | 3 | 71 | 68 | 65 | 62 | 59 | 56 | 53 | 50 |
| | Alternate | 2 | 36 | 33 | 30 | 27 | 24 | 21 | 18 | 15 |
| | | 3 | 57 | 54 | 51 | 48 | 45 | 42 | 39 | 36 |
| 90,000 | Standard | 2 | 61 | 58 | 55 | 52 | 49 | 46 | 43 | 40 |
| | | 3 | 71 | 68 | 65 | 62 | 59 | 56 | 53 | 50 |
| | Alternate | 2 | 48 | 45 | 42 | 39 | 36 | 33 | 30 | 27 |
| | | 3 | 57 | 54 | 51 | 48 | 45 | 42 | 39 | 36 |

(1) Elbows and/or Tees used in the terminations must be included when determining the number of elbows in the piping system.
(2) Number of elbows tabulated are for each (Vent/Flue & Combustion air intake) pipe.
(3) Minimum length of each Vent/Flue & Combustion Air Intake pipe is five feet and one elbow/tee.
(4) 3" diameter pipe can be used in place of 2" diameter pipe.

### *Vent/Flue and Combustion Air Pipe Terminations*

The vent/flue and combustion air pipes may terminate vertically, as through a roof, or horizontally, as through an outside wall.
Vertical pipe terminations should be as shown in the following figure. *Refer to Section IX, Vent/Flue Pipe and Combustion Pipe - Termination Locations* for details concerning location restrictions. The penetrations through the roof must be sealed tight with proper flashing such as is used with a plastic plumbing vent.

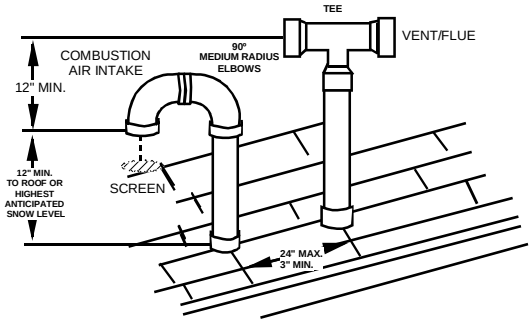


**Vertical Terminations (Dual Pipe)**

Horizontal terminations should be as shown in the following figure. Refer to *Section IX, Vent/Flue Pipe and Combustion Pipe - Termination Location* for location restrictions. A 2 3/8 inch diameter wall penetration is required for 2" diameter pipe while a 3 1/2 inch diameter hole is required for 3" diameter pipe. To secure the pipe passing through the wall and prohibit damage to piping connections, a coupling should be installed on either side of the wall and solvent cemented to a pipe connecting the two couplings. The pipe length should be the wall thickness plus the depth of the socket fittings to be installed on the inside and outside of the wall. The wall penetration should be sealed with silicone caulking material.

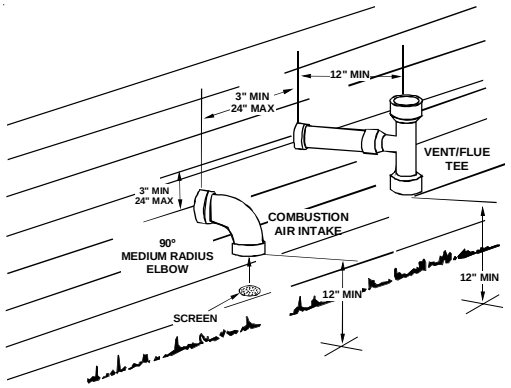


**Standard Horizontal Terminations (Dual Pipe)**

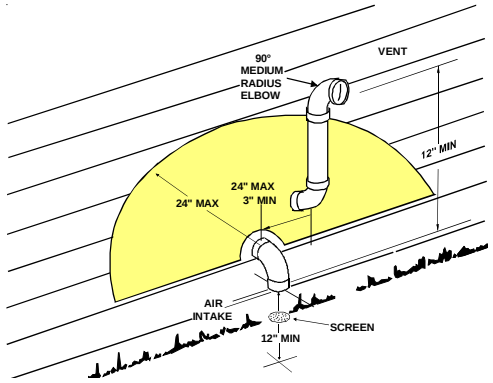


**Alternate Horizontal Vent Termination (Dual Pipe)**

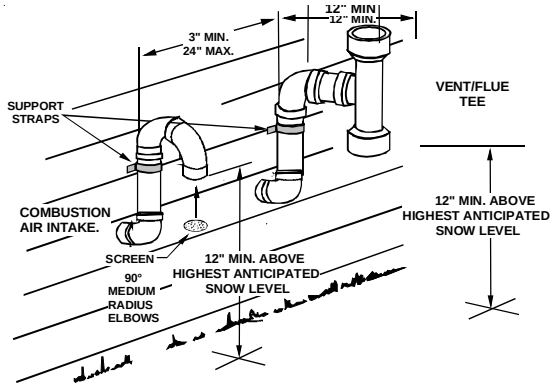


**Standard Horizontal Terminations Above Anticipated Snow Level (Dual Pipe)**

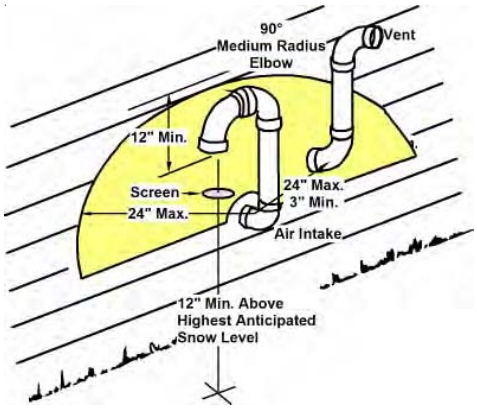


**Alternate Vent Termination Above Anticipated Snow Level (Dual Pipe)**

In a basement installation, the pipes may be run between the joist spaces. If the pipes must go below the joist and then up into the last joist space to penetrate the header, two 45° elbows should be used to reach the header rather than two 90° elbows.

### Vent/Intake Terminations For Installation of Multiple Direct Vent Furnaces

If more than one direct vent furnace is to be installed vertically through a common roof top, maintain the same minimum clearances between the exhaust vent and air intake terminations of adjacent units as with the exhaust vent and air intake terminations of a single unit.
If more than one direct vent furnace is to be installed horizontally through a common side wall, maintain the clearances as in the following figure. Always terminate all exhaust vent outlets at the same elevation and always terminate all air intakes at the same elevation.

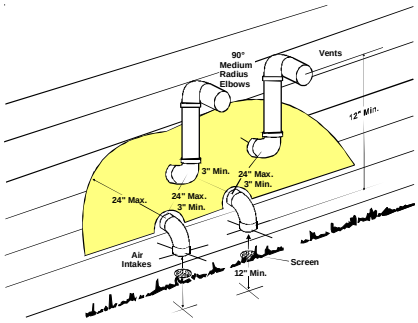


**Horizontal Venting Of Multiple Units**

### Concentric Vent Termination

*Refer to the directions provided with the Concentric Vent Kit (DCVK) for installation specifications.*

## X. CONDENSATE DRAIN LINES & DRAIN TRAP

### General

A condensing gas furnace achieves its high level of efficiency by extracting almost all of the heat from the products of combustion and cooling them to the point where condensation takes place. The condensate which is generated must be piped to an appropriate drain location.
In *upright* installations, the furnace's drain hoses may exit either the right or left side of the furnace. **NOTE:** If the alternate vent/flue outlet is utilized in an upright installation, the drain trap and drain connections must be located on the same side as the alternate vent/flue outlet.
In *horizontal* installations, the drain hoses will exit through the bottom (down side) of the unit with the drain trap suspended beneath the furnace. The field-supplied drain system must be in accordance with all local codes and the instructions in the following sections.

**WARNING**

**In upright upflow installations, the drain trap must be mounted on the opposite side of the unit from the junction box. This will reduce the risk of water reaching the junction box in the event of a blocked drain condition. Failure to follow these instructions can result in possible property damage, personal injury, or death due to electrical shock.**

Follow the bullets listed below when installing the drain system. Refer to the following sections for specific details concerning furnace drain trap installation and drain hose hook ups.

- The drain trap supplied with the furnace must be used.
- The drain line between furnace and drain location must be constructed of 3/4" PVC or CPVC.
- The drain line between furnace and drain location must maintain a 1/4 inch per foot downward slope toward the drain.
- Do not trap the drain line in any other location than at the drain trap supplied with the furnace.
- Do not route the drain line outside where it may freeze.
- If the drain line is routed through an area which may see temperatures near or below freezing, precautions must be taken to prevent condensate from freezing within the drain line.
- If an air conditioning coil is installed with the furnace, a common drain may be used. An open tee must be installed in the drain line, near the cooling coil, to relieve positive air pressure from the coil's plenum. This is necessary to prohibit any interference with the function of the furnace's drain trap.

### Upright Installations

In an upright installation drain hoses are connected to drain ports on the rubber elbow and the recuperator coil front cover. The drain lines are then routed through the right or left side panel and into the drain trap secured to the outside of the cabinet.
**NOTE:** Refer to *Section X, Condensate Drain Lines and Drain Trap - Alternate Vent/Flue Hose Connections* for upright installations using an alternate vent/flue outlet.

#### *Standard Right or Left Side Drain Hose Connections*

Upright installations using the *standard* vent/flue outlet require drain hoses to be connected as follows. The following quantity of hoses, tubes, and hose clamps are provided with the unit.

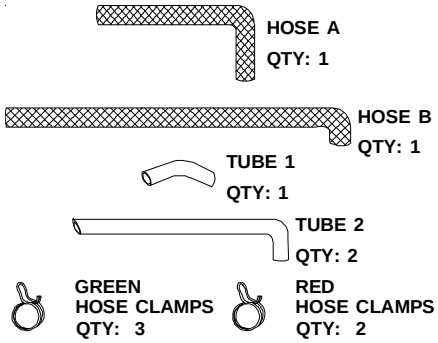


**Hose and Tube Identification**

1. Remove the rubber plug from the front cover drain port (right or left side, depending on the intended drain trap mounting).
2. Secure Hose A to front cover drain port with a red hose clamp. Route hose to rear side panel grommet hole.

**NOTE:** For left side drainage, grommets will have to be relocated to left side panel.

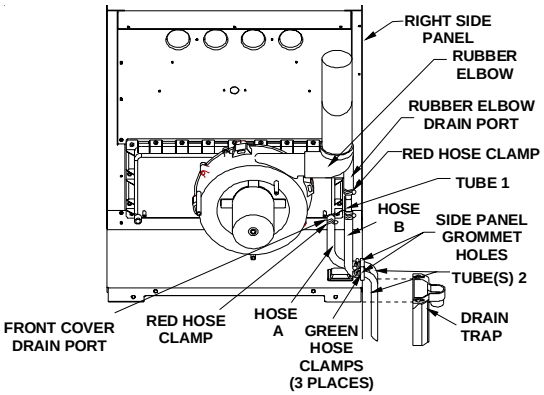


**Upright "Standard" Connections - Right Side (Upflow Shown, Counterflow Similar)**

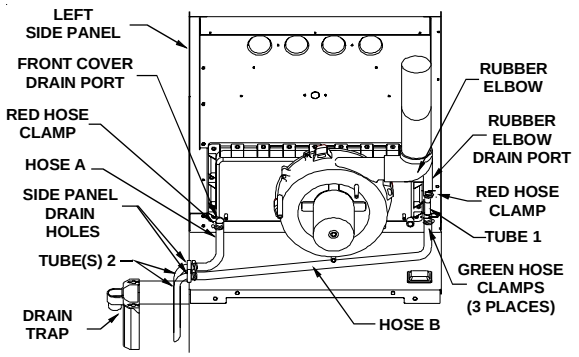


**Upright "Standard" Connections - Left Side (Upflow Shown, Counterflow Similar)**

3. Cut and remove 1/4 inch from the end of the drain port on the rubber elbow.
4. Insert Tube 1 into rubber elbow drain port and secure with red hose clamp. Angle tube outward toward front of furnace.
5. *Right* side drains

   Cut 17 3/4 inches from the long end of Hose B and discard. Secure the remaining hose to Tube 1 with a green hose clamp. Route the other end of Hose B to front right side panel grommet hole.

   *Left* side drains

   Cut "X" inches from the long end of Hose B and discard. Refer to table for appropriate length to cut. Secure remaining hose to Tube 1 with a green hose clamp. Route other end of Hose B to front left side panel grommet hole.

| Cabinet Width (inches) | Models GUVA/GCVA (kBTU_Tons) | "X" Length to Cut From Long End of Hose B (inches) |
|---|---|---|
| 16 1/2 | 045__30 | 8 inches |
| 20 1/2 | 070__40 | 4 inches |
| 24 1/2 | 090__50<br>115__50 | None |

6. Insert short end of each Tube 2 through side panel grommet holes. Secure tubes to Hose A and Hose B with green hose clamps. Ensure hoses and tubes maintain a downward slope for proper drainage and that they are not kinked or binding.

For details concerning mounting of the drain trap, refer to *Section X, Condensate Drain Lines and Drain Trap - Upright Drain Trap Mounting.*

### *Alternate Vent/Flue Drain Hose Connections*

Upright installations using the *alternate* vent/flue outlet will require "right-side only" drain hoses to be connected as follows. Refer to *Section IX, Vent/Flue Pipe* and Combustion Air Pipe for details on alternate vent/flue pipe connection.

1. Remove the rubber plug from the front cover right-side drain port. Save for use in step 3.
2. Secure Hose A to front cover drain port with a red hose clamp. Route hose to rear right side panel grommet hole.
3. Remove grommet from front right-side panel drain hole. Seal hole in grommet with large end of plug. Reinstall grommet and plug into side panel drain hole.
4. Cut 1/4 inch from the end of the drain port on the externally mounted rubber elbow. Discard cut portion.
5. Insert Tube 1 into rubber elbow drain port and secure with a red hose clamp. Angle tube outward toward front of furnace.
6. Cut 17 7/8 inches from the long end of Hose B and discard.
7. Secure remaining end of Hose B to exposed end of Tube 1 with a green hose clamp. Route hose toward right side panel grommet holes.
8. Insert short end of one Tube 2 through rear right side panel grommet drain hole. Secure tube to Hose A with a green hose clamp.
9. Insert short end of remaining Tube 2 into Hose B from rubber elbow and secure with green hose clamp. Ensure hoses and tubes maintain a downward slope for proper drainage and are not kinked or binding.

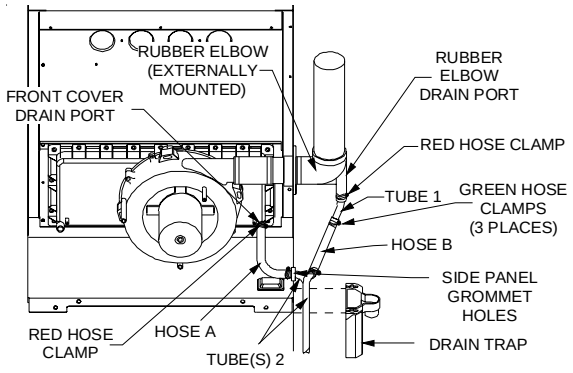


**Upright "Alternate" Connections - Right Side Only (Upflow Shown, Counterflow Similar)**

For details concerning mounting of the drain trap, refer to the following section.

### *Upright Drain Trap Mounting (Left or Right Side Panel)*

1. Insert drain tubes into drain trap and position the drain trap against the side panel. **NOTE:** Drain tubes must reach the bottom of the drain trap.
2. Secure drain trap to side panel at the mounting holes (dimples or crosshairs on counterflow models) located below the grommet drain holes.
3. Attach PVC drain line to drain trap outlet with either a 90° elbow or coupling.

## Horizontal Installations

### *Right Side Down*

Horizontal installations with the right side down require that the drain hoses be connected to the right side front cover drain port and the rubber elbow drain port.

**NOTE:** On counterflow models, relocation of the front cover pressure switch hose is required.

Make connections as follows:

1. Remove the rubber plug from the coil front cover drain port.

   *Counterflow furnaces*

   Relocate the front cover pressure switch hose connection from the left side pressure tap to the right (down) side tap. The pressure switch hose must be connected to the down side to guard against blocked drain conditions. Cut hose to appropriate length to minimize sagging. Plug left (unused) pressure tap with plug removed from right side.
2. Secure Hose A to front cover drain tap with a red hose clamp. Route hose to rear right (down) side panel grommet holes.
3. Cut 1/4 inch from the end of the drain port on the rubber elbow and discard.
4. Insert Tube 1 into rubber elbow drain port and secure with a red hose clamp. Angle tube outward toward front of furnace.
5. Cut 17 3/4 inches from the long end of Hose B and discard.
6. Secure remaining end of Hose B to exposed end of Tube 1 with a green hose clamp. Route hose to front right down side panel grommet holes.
7. Cut 5 1/2 inches straight length from the long end of each Tube 2.

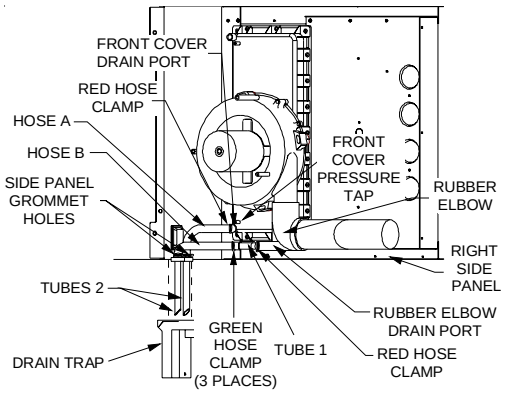


**Horizontal Connections - Right Side Down (Upflow Shown, Counterflow Similar)**

8. Insert approximately one inch of each Tube 2 through the right down side panel grommet holes. Secure tubes to Hose A and Hose B using green hose clamps. Ensure hoses and tubes maintain a downward slope for proper drainage and are not kinked or bound.

For details concerning mounting of the drain trap, refer to *Section X, Condensate Drain Lines and Drain Trap - Upright Drain Trap Mounting.*

### *Left Side Down*

Horizontal installations with the left side panel down will require drain hoses to be connected to the left side front cover drain port and the induced draft blower drain port.

**NOTE:** On upflow models, relocation of the front cover pressure switch hose is required.

1. Remove the rubber plug from the coil front cover left (down) side drain port.
2. *Upflow furnaces*

   Relocate the front cover pressure switch hose connection from the right side (as shipped) pressure tap to the left (down) side tap. The pressure switch hose must be connected to the down side to guard against blocked drain conditions. Cut hose to appropriate length to minimize sagging. Plug right (unused) pressure tap with plug removed from left side.
3. Secure Hose A to front cover drain port with a red hose clamp. Route hose to rear left (down) side panel grommet holes. **NOTE:** For left side drainage, grommets must be relocated to left side panel.

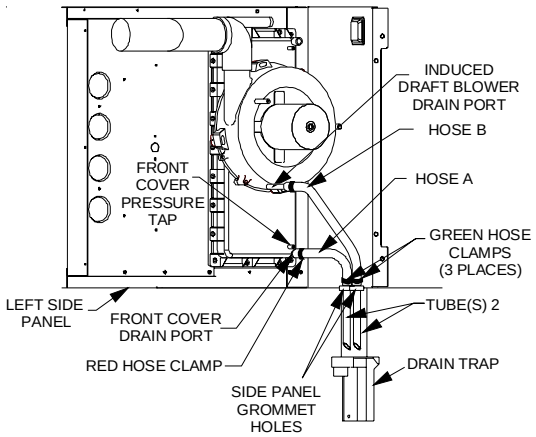


**Horizontal Connections - Left Side Down (Upflow Shown, Counterflow Similar)**

4. Cut "X" inches from the long end of Hose B and discard. Refer to table for appropriate length to cut.

| Cabinet Width (inches) | Model GUVA (kBTU Tons) | "X" Length to Cut From Long End of Hose B |
|---|---|---|
| 16.5 | 045__30 | 19 1/8 inches |
| 20.5 | 070__40 | 14 3/4 inches |
| 24.5 | 090__50<br>115__50 | 11 1/4 inches |

5. Secure short end of Hose B to induced draft blower drain port using a green hose clamp. Route hose to front left (down) side panel grommet holes.
6. Cut 5 1/2 inches straight length from the long end of <u>each</u> Tube 2.
7. *Upflow Units with a 16 1/2" cabinet width.*

   Insert approximately one inch of cut Tube 2 through left side panel grommet hole and secure to Hose A with a hose clamp. Insert remaining Tube 2 through other grommet hole and splice to Hose B with Tube 1, green hose clamps and a short section of hose as shown below. **NOTE:** Tube must reach bottom of trap.

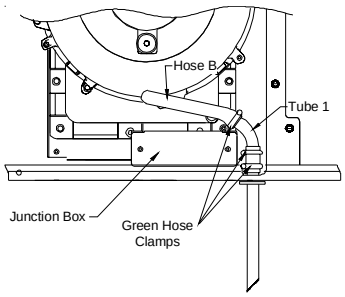


**Tube Installation with Green Hose Clamps**

   *Counterflow Units with a 16 1/2" cabinet width.*

   Insert approximately one inch of cut Tube 2 through left side panel grommet hole and secure to Hose A with a hose clamp. Insert uncut Tube 2 through remaining grommet hole and secure to Hose B with a green hose clamp. **NOTE:** Tube must reach bottom of trap.

   *All Units with a 20 1/2" and 24 1/2" cabinet width.*

   Insert approximately one inch of each Tube 2 through left side panel grommet hole. Secure tubes to Hose A and Hose B with a green hose clamps. **NOTE:** Tube must reach bottom of trap. Ensure hoses and tubes maintain a downward slope for proper drainage and that they are not kinked or binding.

For details concerning mounting of the drain trap, refer to *Section X, Condensate Drain Lines and Drain Trap - Upright Drain Trap Mounting.*

### *Horizontal Drain Trap Mounting (Left or Right Side Panel)*

1. Position the drain trap against side panel with drain tubes inserted into trap. Note that the trap may be orientated with the outlet facing either the furnace's top cover or base pan.
2. Secure drain trap to side panel at the dimples or crosshairs located on either side of the grommet drain holes.
3. Confirm that tubes reach bottom of drain trap and that all hoses maintain a downward slope and are not kinked or binding.
4. Attach PVC drain line to drain trap outlet with either a 90° elbow or coupling.

# XI. ELECTRICAL CONNECTIONS

**WARNING**

TO AVOID THE RISK OF ELECTRICAL SHOCK, WIRING TO THE UNIT MUST BE POLARIZED AND GROUNDED.

**WARNING**

TO AVOID INJURY, ELECTRICAL SHOCK OR DEATH, DISCONNECT ELECTRICAL POWER BEFORE SERVICING OR CHANGING ANY ELECTRICAL WIRING.

**CAUTION**

LABEL ALL WIRES PRIOR TO DISCONNECTION WHEN SERVICING CONTROLS. WIRING ERRORS CAN CAUSE IMPROPER AND DANGEROUS OPERATION. VERIFY PROPER OPERATION AFTER SERVICING.

## WIRING HARNESS

The wiring harness is an integral part of this furnace. Field alteration to comply with electrical codes should not be required. Wires are color and number coded for identification purposes. Refer to the wiring diagram for wire routings. If any of the original wire as supplied with the furnace must be replaced, it must be replaced with wiring material having a temperature rating of at least 105°C. Any replacement wiring must be copper conductor.

## 115 VOLT LINE CONNECTIONS

Before proceeding with electrical connections, ensure that the supply voltage, frequency, and phase correspond to that specified on the unit rating plate. Power supply to the furnace must be N.E.C. Class 1, and must comply with all applicable codes. The furnace must be electrically grounded in accordance with local codes or, in their absence, with the latest edition of The National Electric Code, ANSI NFPA 70 and/or The Canadian Electric Code CSA C22.1.

Use a separate fused branch electrical circuit containing properly sized wire, and fuse or circuit breaker. The fuse or circuit breaker must be sized in accordance with the maximum overcurrent protection specified on the unit rating plate. An electrical disconnect must be provided at the furnace location.

**NOTE:** Line polarity must be observed when making field connections.

**WARNING**

IN UPRIGHT UPFLOW INSTALLATIONS, THE DRAIN TRAP MUST BE MOUNTED ON THE OPPOSITE SIDE OF THE UNIT FROM THE JUNCTION BOX. THIS WILL REDUCE THE RISK OF WATER REACHING THE JUNCTION BOX IN THE EVENT OF A BLOCKED DRAIN CONDITION.

Connect hot, neutral, and ground wires as shown in the wiring diagram located on the unit's blower door. For direct vent applications, the cabinet opening to the junction box must be sealed air tight using either an UL approved bushing such as Heyco Liquid Tight or by applying non-reactive sealant to bushing.

Line polarity must be observed when making field connections. Line voltage connections can be made through either the right or left side panel. The furnace is shipped configured for a left side (right side for counterflows) electrical connection with the junction box located inside the blower compartment. To make electrical connections through the opposite side of the furnace, the junction box must be relocated to the other side of the blower compartment prior to making electrical connections. To relocate the junction box, follow the steps shown below.

**NOTE:** Wire routing must not to interfere with circulator blower operation, filter removal, or routine maintenance.

**CAUTION**

EDGES OF SHEET METAL HOLES MAY BE SHARP. USE GLOVES A PRECAUTION WHEN REMOVING HOLE PLUGS.

1. Remove the burner compartment door.
2. Remove and save the two screws securing the junction box to the side panel.
3. Relocate junction box and associated plugs and grommets to opposite side panel. Secure with screws removed in step 2.

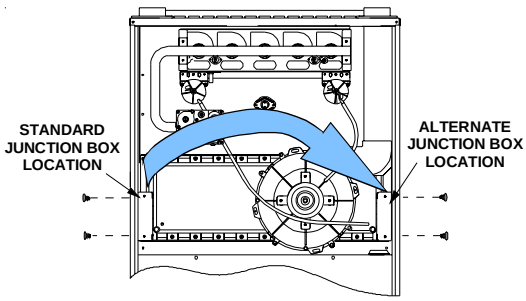


**Junction Box Relocation**

**WARNING**

TO AVOID THE RISK OF INJURY, ELECTRICAL SHOCK OR DEATH, THE FURNACE MUST BE ELECTRICALLY GROUNDED IN ACCORDANCE WITH LOCAL CODES OR, IN THEIR ABSENCE, WITH THE LATEST EDITION OF THE NATIONAL ELECTRIC CODE.

To ensure proper unit grounding, the ground wire should run from the furnace ground screw located inside the furnace junction box all the way back to the electrical panel. **NOTE:** Do not use gas piping as an electrical ground. To confirm proper unit grounding, turn off the electrical power and perform the following check.

1. Measure resistance between the neutral (white) connection and one of the burners.
2. Resistance should measure 10 ohms or less.

This furnace is equipped with a blower door interlock switch which interrupts unit voltage when the blower door is opened for servicing. Do not defeat this switch.

## 24 VOLT THERMOSTAT WIRING

**NOTE:** Wire routing must not interfere with circulator blower operation, filter removal, or routine maintenance.

As a two-stage furnace, the furnace integrated control module provides terminals for both "W1" and "W2", and "YLO" and "Y" thermostat connections. This allows the furnace to support the following system applications: 'Two-Stage Heating Only', 'Two-Stage Heating with Single-Stage Cooling', and 'Two-Stage Heating with Two-Stage Cooling'. Refer to the following figures and table for proper connections to the integrated control module.

Low voltage connections can be made through either the right or left side panel. Thermostat wiring entrance holes are located in the blower compartment. Wire routing must not interfere with circulator blower operation, filter removal, or routine maintenance.

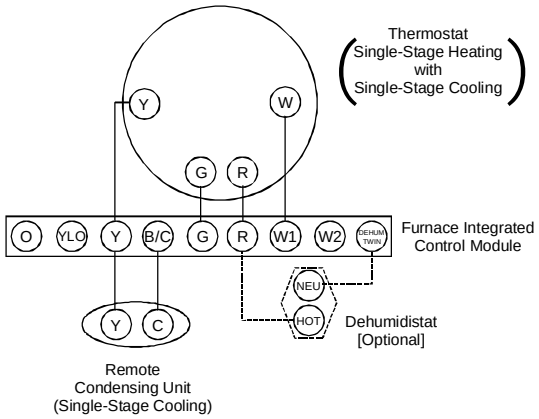


Single-Stage Heating with Single-Stage Cooling

NOTE: To apply a single-stage heating thermostat, the thermostat selector jumper on the integrated Control module *must* be set on single stage.

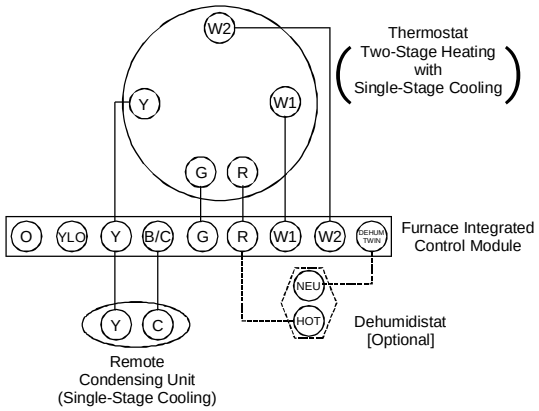


Two-Stage Heating with Single-Stage Cooling

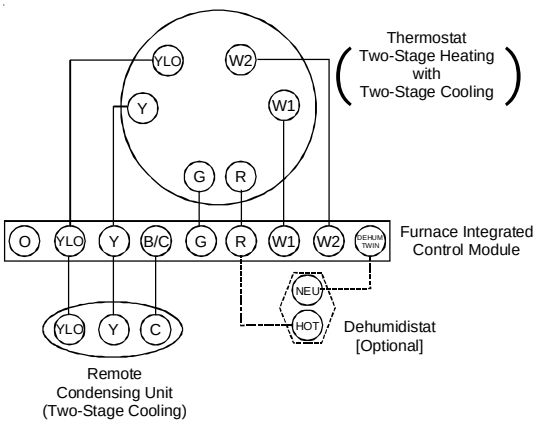


Two-Stage Heating with Two-Stage Cooling

**Thermostat Diagrams**

This furnace is equipped with a 40 VA transformer to facilitate use with most cooling equipment. Consult the wiring diagram, located on the blower compartment door, for further details of 115 Volt and 24 Volt wiring.

## Single-Stage Thermostat Application

A single-stage thermostat with only one heating stage can be used to control this furnace. The application of a single-stage thermostat does not offer "true" thermostat-driven two-stage operation, but provides a *timed* transition from low to high fire. The furnace will run on low stage for a fixed period of time before stepping up to high stage to satisfy the thermostat's call for heat. The delay period prior to stepping up can be set at either 5 or 10 minutes through the DIP switch adjacent to the Heat Off delay DIP switches on the integrated control module. To use a single-stage thermostat, turn off power to the furnace, move the thermostat selection jumper on the integrated control module from the "two-stage" position to the "single-stage" position, turn power back on. Refer to the following figures.

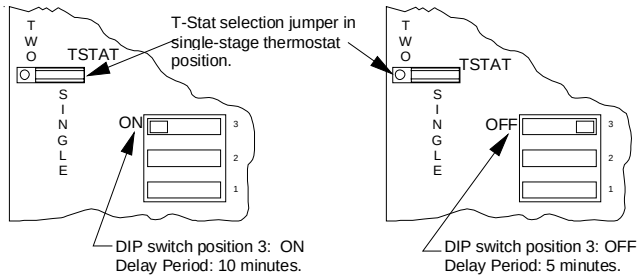


## 24 Volt Dehumidistat Wiring

The optional usage of a dehumidistat allows the furnace's circulator blower to operate at a slightly lower speed during a combined thermostat call for cooling and dehumidistat call for dehumidification. This lower blower speed enhances dehumidification of the conditioned air as it passes through the AC coil. For proper function, a dehumidistat applied to this furnace must operate on 24 VAC and utilize a switch which *opens on humidity rise.*

To install/connect a dehumidistat:

1. Turn OFF power to furnace.
2. Secure the dehumidistat neutral wire (typically the white lead) to the screw terminal marked "DEHUM" on the furnace integrated control module.
3. Secure the dehumidistat hot wire (typically the black lead) to the screw terminal marked "R" on the furnace integrated control module.
4. Secure the dehumidistat ground wire (typically the green lead) to the ground screw on the furnace junction box. **NOTE:** Ground wire may not be present on all dehumidistats.
5. Turn ON power to furnace.

To enable the dehumidify function on the integrated control module:

1. Cut the jumper wire labeled "CUT FOR DEHUM" located adjacent to the DEHUM screw terminal.

Once the jumper wire is cut, the dehumidify function is enabled during a *combination* call for cooling (T-Stat) and dehumidification (Dehum-Stat). The yellow LED adjacent to the DEHUM screw terminal will be illuminated during dehumidification.

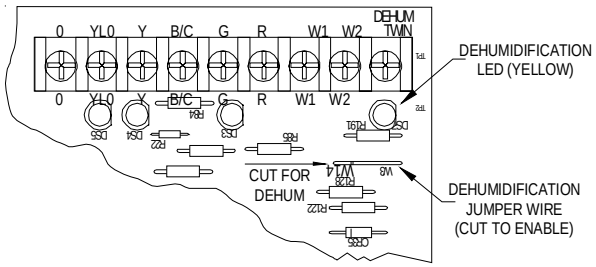


## Fossil Fuel Applications

This furnace can be used in conjunction with a heat pump in a fossil fuel application. A fossil fuel application refers to a combined gas furnace and heat pump installation which uses an outdoor temperature sensor to determine the most cost efficient means of heating (heat pump, gas furnace, or both).

A heat pump thermostat with *three stages of heat* is required to properly use a two-stage furnace in conjunction with a heat pump. Refer to the fossil fuel kit installation instructions for additional thermostat requirements.

Strictly follow the wiring guidelines in the fossil fuel kit installation instructions. All furnace connections must be made to the furnace two-stage integrated control module and the "FURNACE" terminal strip on the fossil fuel control board.

### 115 Volt Line Connection of Accessories (Humidifier and Electronic Air Cleaner)

**WARNING**

**To avoid injury, electrical shock or death, disconnect electrical power before servicing, or changing any electrical wiring.**

The furnace's integrated control module is equipped with line voltage accessory terminals for controlling power to an optional field-supplied humidifier and/or electronic air cleaner.
The accessory load specifications are as follows:

| | |
|---|---|
| Humidifier | 1.0 Amp maximum at 120 VAC |
| Electronic Air Cleaner | 1.0 Amp maximum at 120 VAC |

Turn OFF power to the furnace before installing any accessories. Follow the humidifier or air cleaner manufacturers' instructions for locating, mounting, grounding, and controlling these accessories. Accessory wiring connections are to be made through the 1/4" quick connect terminals provided on the furnace integrated control module. The humidifier and electronic air cleaner hot and neutral terminals are identified as HUM and EAC. All field wiring must conform to applicable codes. Connections should be made as shown below.

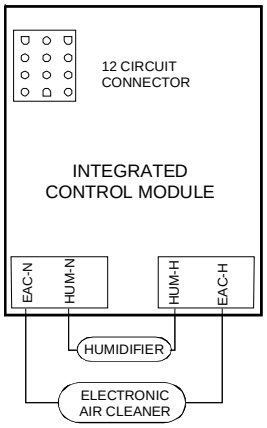


OPTIONAL ACCESSORIES

**Accessories Wiring**

If it is necessary for the installer to supply additional line voltage wiring to the inside of the furnace, the wiring must conform to all local codes, and have a minimum temperature rating of 105°C. All line voltage wire splices must be made inside the furnace junction box.
The integrated control module humidifier terminals (HUM) are energized with 115 volts whenever the induced draft blower is energized. The integrated control module electronic air cleaner terminals (EAC) are energized with 115 volts whenever the circulator blower is energized.

## XII. GAS SUPPLY AND PIPING

### General

The furnace rating plate includes the approved furnace gas input rating and gas types. The furnace must be equipped to operate on the type of gas applied. This includes any conversion kits required for alternate fuels and/or high altitude.

**CAUTION**

**To prevent unreliable operation or equipment damage, the inlet gas supply pressure must be as specified on the unit rating plate with all other household gas fired appliances operating.**

Inlet gas supply pressures must be maintained within the ranges specified below. The supply pressure must be constant and available with all other household gas fired appliances operating. The minimum gas supply pressure must be maintained to prevent unreliable ignition. The maximum must not be exceeded to prevent unit overfiring.

| Inlet Gas Supply Pressure | |
|---|---|
| Natural Gas | Minimum:5.0" W.C. Maximum :10.0" W.C. |
| Propane Gas | Minimum:11.0" W.C. Maximum :13.0" W.C. |

### *High Altitude Derate*

When this furnace is installed at high altitude, the appropriate High Altitude orifice kit must be applied. This is required due to the natural reduction in the density of both the gas fuel and combustion air as altitude increases. The kit will provide the proper design certified input rate within the specified altitude range.
High altitude kits are purchased according to the installation altitude and usage of either natural or propane gas. Contact your distributor for a tabular listing of appropriate altitude ranges and corresponding manufacturer's high altitude (Natural, propane gas, and/or Pressure Switch) kits.
Do **not** derate the furnace by adjusting the manifold pressure to a lower pressure than specified on the furnace rating plate. The combination of the lower air density and a lower manifold pressure will prohibit the burner orifice from drawing the proper amount of air into the burner. This may cause incomplete combustion, flashback, and possible yellow tipping.
In some areas the gas supplier may artificially derate the gas in an effort to compensate for the effects of altitude. If the gas is artificially derated, the appropriate orifice size must be determined based upon the BTU/ft$^3$ content of the derated gas and the altitude. Refer to the National Fuel Gas Code, NFPA 54/ANSI Z223.1, and information provided by the gas supplier to determine the proper orifice size.
A different pressure switch may be required at high altitude regardless of the BTU/ft$^3$ content of the fuel used. Contact your distributor for a tabular listing of appropriate altitude ranges and corresponding manufacturer's pressure switch kits.

### *Propane Gas Conversion*

**WARNING**

**Possible property damage, personal injury or death may occur if the correct conversion kits are not installed. The appropriate kits must be applied to insure safe and proper furnace operation. All conversions must be performed by a qualified installer or service agency.**

This unit is configured for natural gas. The appropriate manufacturer's propane gas conversion kit, must be applied for propane gas installations. Refer to the *Section VIII, Propane Gas / High Altitude Installations* section for details.

### *Gas Valve*

This unit is equipped with a 24 volt gas valve controlled during furnace operation by the integrated control module. As shipped, the valve is configured for natural gas. The valve is field convertible for

use with propane gas by replacing the regulator spring with a propane gas spring from an appropriate manufacturer's propane gas conversion kit. Taps for measuring the gas supply pressure and manifold pressure are provided on the valve.

The gas valve has a manual ON/OFF control located on the valve itself. This control may be set only to the "ON" or "OFF" position. Refer to the lighting instructions label or *Section XIV, Startup Procedure & Adjustment* for use of this control during start up and shut down periods.

## Gas Piping Connections

### *General*

**CAUTION**

**To avoid possible unsatisfactory operation or equipment damage due to underfiring of equipment, use the proper size of natural/propane gas piping needed when running pipe from the meter/tank to the furnace.**

When sizing a trunk line, be sure to include all appliances which will operate simultaneously when sizing a trunk line.

The gas piping supplying the furnace must be properly sized based on the gas flow required, specific gravity of the gas, and length of the run. The gas line installation must comply with local codes, or in their absence, with the latest edition of the National Fuel Gas Code, NFPA 54/ANSI Z223.1.

**Natural Gas Capacity of Pipe**
**In Cubic Feet of Gas Per Hour (CFH)**

| Length of Pipe in Feet | Nominal Black Pipe Size | | | | |
|---|---|---|---|---|---|
| | 1/2" | 3/4" | 1" | 1 1/4" | 1 1/2" |
| 10 | 132 | 278 | 520 | 1050 | 1600 |
| 20 | 92 | 190 | 350 | 730 | 1100 |
| 30 | 73 | 152 | 285 | 590 | 980 |
| 40 | 63 | 130 | 245 | 500 | 760 |
| 50 | 56 | 115 | 215 | 440 | 670 |
| 60 | 50 | 105 | 195 | 400 | 610 |
| 70 | 46 | 96 | 180 | 370 | 560 |
| 80 | 43 | 90 | 170 | 350 | 530 |
| 90 | 40 | 84 | 160 | 320 | 490 |
| 100 | 38 | 79 | 150 | 305 | 460 |

(Pressure 0.5 psig or less and pressure drop of 0.3" W.C.; Based on 0.60 Specific Gravity Gas)

$$\text{CFH} = \frac{\text{BTUH Furnace Input}}{\text{Heating Value of Gas (BTU/Cubic Foot)}}$$

To connect the furnace to the building's gas piping, the installer must supply a ground joint union, drip leg, manual shutoff valve, and line and fittings to connect to gas valve. In some cases, the installer may also need to supply a transition piece from 1/2" pipe to a larger pipe size.

The following stipulations apply when connecting gas piping. Refer to *Gas Piping Connections* figure for typical gas line connections to the furnace.

- Use black iron or steel pipe and fittings for the building piping.
- Use pipe joint compound on male threads only. Pipe joint compound must be resistant to the action of the fuel used.
- Use ground joint unions.
- Install a drip leg to trap dirt and moisture before it can enter the gas valve. The drip leg must be a minimum of three inches long.
- Install a 1/8" NPT pipe plug fitting, accessible for test gage connection, immediately upstream of the gas supply connection to the furnace.
- Use two pipe wrenches when making connection to the gas valve to keep it from turning. The orientation of the gas valve on the manifold must be maintained as shipped from the factory.
- Install a manual shutoff valve between the gas meter and unit within six feet of the unit. If a union is installed, the union must be downstream of the manual shutoff valve, between the shutoff valve and the furnace.
- Tighten all joints securely.
- Connect the furnace to the building piping by one of the following methods:
  - Rigid metallic pipe and fittings.
  - Semi-rigid metallic tubing and metallic fittings. Aluminum alloy tubing must not be used in exterior locations. In order to seal the grommet cabinet penetration, rigid pipe must be used to reach the outside of the cabinet. A semi-rigid connector to the gas piping may be used from there.
- Use listed gas appliance connectors in accordance with their instructions. Connectors must be fully in the same room as the furnace.
- Protect connectors and semirigid tubing against physical and thermal damage when installed. Ensure aluminum-alloy tubing and connectors are coated to protect against external corrosion when in contact with masonry, plaster, or insulation, or subjected to repeated wetting by liquids such as water (except rain water), detergents, or sewage.

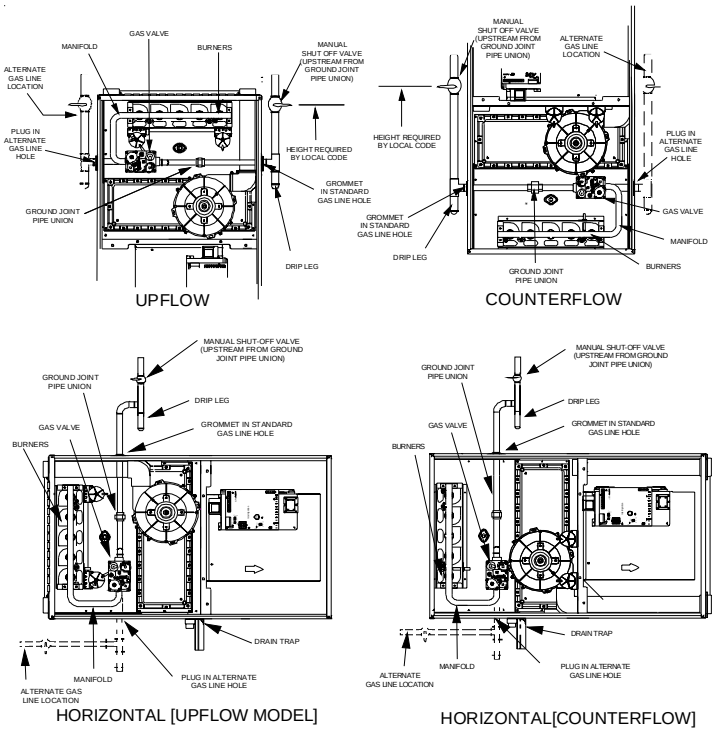


NOTES. 1. WHEN GAS LINE IS IN THE ALTERNATE LOCATION, SWAP THE POSITION OF THE PLUG AND GROMMET.

2. DRIP LEG MAY TERMINATE WITH A 1/2" X 1/8" PIPE PLUG TO ACCOMMODATE LINE GAS PRESSURE MEASUREMENT.

**Gas Piping Connections**

**CAUTION**

**EDGES OF SHEET METAL HOLES MAY BE SHARP. USE GLOVES A PRECAUTION WHEN REMOVING HOLE PLUGS.**

### *DIRECT/STANDARD INLET PIPING*

When gas piping enters *directly* to the gas valve through the *standard* inlet hole, the installer must supply straight pipe with a ground joint union to reach the exterior of the furnace. The rigid pipe must be long enough to reach the outside of the cabinet to seal the grommet cabinet penetration. A semi-rigid connector to the gas piping can be used outside the cabinet per local codes.

### *INDIRECT/ALTERNATE INLET PIPING*

When gas piping enters *indirectly* to the gas valve through the *alternate* gas inlet hole the following fittings (starting from the gas valve) to reach the outside of the cabinet must be supplied:

- Coupling.
- 90 degree elbow.
- 2 inch close nipple.
- 90 degree elbow.
- Straight pipe, with a ground joint union, to reach the exterior of the furnace. The rigid pipe must be long enough to reach the outside of the cabinet so as to seal the grommet cabinet penetration. A semi-rigid connector to the gas piping can be used outside the cabinet per local codes.

### *GAS PIPING CHECKS*

Before placing unit in operation, leak test the unit and gas connections.

**WARNING**

**TO AVOID THE POSSIBILITY OF EXPLOSION OR FIRE, NEVER USE A MATCH OR OPEN FLAME TO TEST FOR LEAKS.**

Check for leaks using an approved chloride-free soap and water solution, an electronic combustible gas detector, or other approved testing methods.

**NOTE:** Never exceed specified pressures for testing. Higher pressure may damage the gas valve and cause subsequent overfiring, resulting in heat exchanger failure.

Disconnect this unit and shutoff valve from the gas supply piping system before pressure testing the supply piping system with pressures in excess of 1/2 psig (3.48 kPa).

Isolate this unit from the gas supply piping system by closing its external manual gas shutoff valve before pressure testing supply piping system with test pressures equal to or less than 1/2 psig (3.48 kPa).

## PROPANE GAS TANKS AND PIPING

**WARNING**

**PROPANE GAS IS HEAVIER THAN AIR AND ANY LEAKING GAS CAN SETTLE IN ANY LOW AREAS OR CONFINED SPACES. TO PREVENT PROPERTY DAMAGE, PERSONAL INJURY, OR DEATH DUE TO FIRE OR EXPLOSION CAUSED BY A PROPANE GAS LEAK, INSTALL A GAS DETECTION WARNING DEVICE.**

A gas detecting warning system is the only reliable way to detect a propane gas leak. Rust can reduce the level of odorant in propane gas. Do not rely on your sense of smell. Contact a local propane gas supplier about installing a gas detecting warning system. If the presence of gas is suspected, follow the instructions on Page 4 of this manual.

All propane gas equipment must conform to the safety standards of the National Board of Fire Underwriters, NBFU Manual 58.

For satisfactory operation, propane gas pressure must be 11 inch w.c. at the furnace manifold with all gas appliances in operation. Maintaining proper gas pressure depends on three main factors:

1. Vaporization rate, depending on temperature of the liquid, and “wetted surface” area of the container or containers.
2. Proper pressure regulation. (Two-stage regulation is recommended for both cost and efficiency).
3. Pressure drop in lines between regulators, and between second stage regulator and the appliance. Pipe size will depend on length of pipe run and total load of all appliances.

Complete information regarding tank sizing for vaporization, recommended regulator settings, and pipe sizing is available from most regulator manufacturers and propane gas suppliers.

Since propane gas will quickly dissolve white lead and most standard commercial compounds, special pipe dope must be used. Shellac-based compounds resistant to the actions of liquefied petroleum gases such as Gasolac®, Stalactic®, Clyde’s® or John Crane® are satisfactory.

Refer to the following illustration for typical propane gas installations.

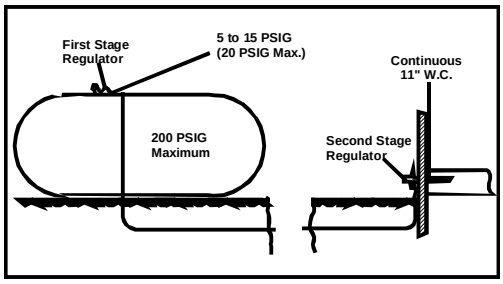


**Propane Gas Installation (Typ.)**

**Sizing Between First and Second Stage Regulator***

Maximum Propane Capacities listed are based on 2 psig pressure drop at 10 psig setting. Capacities in 1,000 BTU/hour.

| Pipe or Tubing Length, Feet | Tubing Size, O.D. Type L | | | | | Nominal Pipe Size Schedule 40 | |
|---|---|---|---|---|---|---|---|
| | 3/8" | 1/2" | 5/8" | 3/4" | 7/8" | 1/2" | 3/4" |
| 10 | 730 | 1,700 | 3,200 | 5,300 | 8,300 | 3,200 | 7,500 |
| 20 | 500 | 1,100 | 2,200 | 3,700 | 5,800 | 2,200 | 4,200 |
| 30 | 400 | 920 | 2,000 | 2,900 | 4,700 | 1,800 | 4,000 |
| 40 | 370 | 850 | 1,700 | 2,700 | 4,100 | 1,600 | 3,700 |
| 50 | 330 | 770 | 1,500 | 2,400 | 3,700 | 1,500 | 3,400 |
| 60 | 300 | 700 | 1,300 | 2,200 | 3,300 | 1,300 | 3,100 |
| 80 | 260 | 610 | 1,200 | 1,900 | 2,900 | 1,200 | 2,600 |
| 100 | 220 | 540 | 1,000 | 1,700 | 2,600 | 1,000 | 2,300 |
| 125 | 200 | 490 | 900 | 1,400 | 2,300 | 900 | 2,100 |
| 150 | 190 | 430 | 830 | 1,300 | 2,100 | 830 | 1,900 |
| 175 | 170 | 400 | 780 | 1,200 | 1,900 | 770 | 1,700 |
| 200 | 160 | 380 | 730 | 1,100 | 1,800 | 720 | 1,500 |

To convert to capacities at 15 psig settings - multiply by 1.130

To convert to capacities at 5 psig settings - multiply by 0.879

**Propane Gas Piping Chart I**

**Sizing Between Single or Second Stage Regulator and Appliance***

Maximum Propane Capacities Listed are Based on 1/2" W.C. pressure drop at 11" W.C. setting. Capacities in 1,000 BTU/hour.

| Pipe or Tubing Length, Feet | Tubing Size, O.D. Type L | | | | | | Nominal Pipe Size Schedule 40 | | | | |
|---|---|---|---|---|---|---|---|---|---|---|---|
| | 3/8" | 1/2" | 5/8" | 3/4" | 7/8" | 1-1/8" | 1/2" | 3/4" | 1" | 1-1/4" | 1-1/2" |
| 10 | 39 | 92 | 199 | 329 | 501 | 935 | 275 | 567 | 1,071 | 2,205 | 3,307 |
| 20 | 26 | 62 | 131 | 216 | 346 | 630 | 189 | 393 | 732 | 1,496 | 2,299 |
| 30 | 21 | 50 | 107 | 181 | 277 | 500 | 152 | 315 | 590 | 1,212 | 1,858 |
| 40 | 19 | 41 | 90 | 145 | 233 | 427 | 129 | 267 | 504 | 1,039 | 1,559 |
| 50 | 18 | 37 | 79 | 131 | 198 | 376 | 114 | 237 | 448 | 913 | 1,417 |
| 60 | 16 | 35 | 72 | 121 | 187 | 340 | 103 | 217 | 409 | 834 | 1,275 |
| 80 | 13 | 29 | 62 | 104 | 155 | 289 | 89 | 185 | 346 | 724 | 1,066 |
| 100 | 11 | 26 | 55 | 90 | 138 | 255 | 78 | 162 | 307 | 630 | 976 |
| 125 | 10 | 24 | 48 | 81 | 122 | 224 | 69 | 146 | 275 | 567 | 866 |
| 150 | 9 | 21 | 43 | 72 | 109 | 202 | 63 | 132 | 252 | 511 | 787 |
| 200 | 8 | 19 | 39 | 66 | 100 | 187 | 54 | 112 | 209 | 439 | 665 |
| 250 | 8 | 17 | 36 | 60 | 93 | 172 | 48 | 100 | 185 | 390 | 590 |

*Data in accordance with NFPA pamphlet NO. 54

**Propane Gas Piping Chart II**

## XIII. CIRCULATING AIR & FILTERS

### Ductwork - Air Flow

Duct systems and register sizes must be properly designed for the CFM and external static pressure rating of the furnace. Ductwork should be designed in accordance with the recommended methods of "Air Conditioning Contractors of America" Manual D.

A duct system must be installed in accordance with Standards of the National Board of Fire Underwriters for the Installation of Air Conditioning, Warm Air Heating and Ventilating Systems. Pamphlets No. 90A and 90B.

A closed return duct system must be used, with the return duct connected to the furnace. **NOTE:** Ductwork must never be attached to the back of the furnace. Supply and return connections to the furnace may be made with flexible joints to reduce noise transmission. To prevent the blower from interfering with combustion air or draft when a central return is used, a connecting duct must be installed between the unit and the utility room wall. A room, closet, or alcove must not be used as a return air chamber.

When the furnace is used in connection with a cooling unit, the furnace should be installed in parallel with or on the upstream side of the cooling unit to avoid condensation in the heating element. With a parallel flow arrangement, the dampers or other means used to control the flow of air must be adequate to prevent chilled air from entering the furnace and, if manually operated, must be equipped with means to prevent operation of either unit unless the damper is in the full heat or cool position.

When the furnace is installed without a cooling coil, it is recommended that a removable access panel be provided in the outlet air duct. This opening shall be accessible when the furnace is installed and shall be of such a size that the heat exchanger can be viewed for visual light inspection or such that a sampling probe can be inserted into the airstream. The access panel must be made to prevent air leaks when the furnace is in operation.

When the furnace is heating, the temperature of the return air entering the furnace must be between 55°F and 100°F.

### Filters - Read This Section Before Installing The Return Air Ductwork

Filters must be used with this furnace. Discuss filter maintenance with the building owner. Filters do not ship with this furnace, but must be provided by the installer. Filters must comply with UL900 or CAN/ULCS111 standards. If the furnace is installed without filters, the warranty will be voided.

On upflow units, guide dimples locate the side return cutout locations. Use a straight edge to scribe lines connecting the dimples. Cut out the opening on these lines. **NOTE:** An undersized opening will cause reduced airflow.

Upflow units with an air delivery of less than 1800 CFM should either use the bottom return or one-side return.

Upflow units with an air delivery of 1800 CFM or higher must either use a two-side return combination or a one-side return and one bottom return combination. These combinations provide proper airflow through the unit.

Refer to Minimum Filter Area tables to determine filter area requirements.

| | | COOLING AIRFLOW REQUIREMENT (CFM) | | | | | | |
|---|---|---|---|---|---|---|---|---|
| | | 600 | 800 | 1000 | 1200 | 1400 | 1600 | 2000 |
| Input Airflow | 070__40 | --- | --- | 320* | 320* | 336 | 384 | --- |
| | 090__50 | --- | --- | --- | 427* | 427* | 427* | 480 |

*Minimum filter area dictated by heating airflow requirement.

**Permanent Minimum Filter Area (sq. in)**

*[Based on a 600 ft/min filter face velocity]*

| | | COOLING AIRFLOW REQUIREMENT (CFM) | | | | | | |
|---|---|---|---|---|---|---|---|---|
| | | 600 | 800 | 1000 | 1200 | 1400 | 1600 | 2000 |
| Input Airflow | 070__40 | --- | --- | 641* | 641* | 672 | 768 | --- |
| | 090__50 | --- | --- | --- | 854* | 854* | 854* | 960 |

*Minimum filter area dictated by heating airflow requirement.

**Disposable Minimum Filter area (sq. in)**

*[Based on 300 ft/min filter face velocity]*

### Upright Installations

Depending on the installation and/or customer preference, differing filter arrangements can be applied. Filters can be installed in the central return register or a side panel external filter rack kit (upflows). As an alternative a media air filter or electronic air cleaner can be used as the requested filter.

The following figure shows possible filter locations.

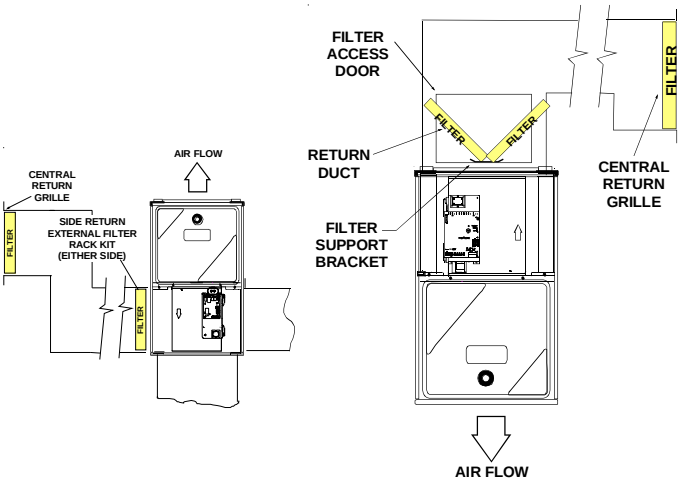


**Possible Upright Upflow** **Possible Upright Counterflow**

**Filter Locations**

**NOTE:** Internal filter retention is not provided on this furnace. If an internal installation is desired, an internal filter retention kit is available as an accessory. Please see your distributor for details.

### Horizontal Installations

Filters must be installed in either the central return register or in the return air duct work.

## XIV. STARTUP PROCEDURE & ADJUSTMENT

Furnace must have a 115 VAC power supply properly connected and grounded. Proper polarity must be maintained for correct operation. In addition to the following start-up and adjustment items, refer to further information in *Section XVI, Operational Checks*.

### Heat Anticipator Setting

The heat anticipator in the room thermostat must be correctly adjusted to obtain the proper number of cycles per hour and to prevent "overshooting" of the setting. Set the heat anticipator setting to 0.7 amps. Follow the thermostat manufacturer's instructions on how to adjust the heat anticipator setting.

### Drain Trap Priming

The drain trap must be primed prior to furnace startup. To prime, fill the drain trap with water. This ensures proper furnace drainage upon startup and prohibits the possibility of flue gases escaping through the drain system.

### Furnace operation

Purge gas lines of air prior to startup. Be sure not purge lines into an enclosed burner compartment.
Check for leaks using an approved chloride-free soap and water solution, an electronic combustible gas detector, or other approved method. Verify that all required kits (propane gas, high altitude, etc.) have been appropriately installed.

#### *Furnace Startup*

1. Close the manual gas shutoff valve external to the furnace.
2. Turn off the electrical power to the furnace.
3. Set the room thermostat to the lowest possible setting.
4. Remove the burner compartment door.

**NOTE:** This furnace is equipped with an ignition device which automatically lights the burner. Do not try to light the burner by hand.

5. Move the furnace gas valve manual control to the OFF position.
6. Wait five minutes then smell for gas. Be sure check near the floor as some types of gas are heavier than air.
7. If you smell gas after five minutes, immediately follow the instructions on page 4 of this manual. If you do not smell gas after five minutes, move the furnace gas valve manual control to the ON position.
8. Replace the burner compartment door.
9. Open the manual gas shutoff valve external to the furnace.
10. Turn on the electrical power to the furnace.
11. Adjust the thermostat to a setting above room temperature.
12. After the burners are lit, set the thermostat to desired temperature.

#### *Furnace Shutdown*

1. Set the thermostat to the lowest setting.
   The integrated control will close the gas valve and extinguish flame. Following a 15 second delay, the induced draft blower will be de-energized. After a 60, 90, 120, 150 or 210-second delay period (field selectable delay OFF [60, 90, 120, 180] plus 30-second ramp down), the circulator blower de-energizes.
2. Remove the burner compartment door and move the furnace gas valve manual control to the OFF position.
3. Close the manual gas shutoff valve external to the furnace.
4. Replace the burner compartment door.

### Gas Supply Pressure Measurement

**CAUTION**

**To prevent unreliable operation or equipment damage, the inlet gas supply pressure must be as specified on the unit rating plate with all other household gas fired appliances operating.**

#### *White-Rodgers 36E54 Gas Valve*

The line pressure supplied to the gas valve must be within the range specified below. The supply pressure can be measured at the gas valve inlet pressure tap or at a hose fitting installed in the gas piping drip leg. The supply pressure must be measured with the burners operating. To measure the gas supply pressure, use the following procedure.

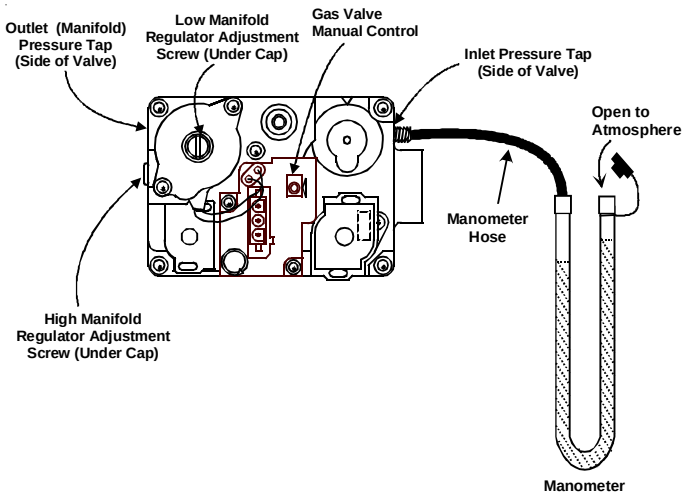


**White-Rodgers Model 36E54 Connected to Manometer**

1. Turn OFF gas to furnace at the manual gas shutoff valve external to the furnace.
2. Connect a calibrated water manometer (or appropriate gas pressure gauge) at either the gas valve inlet pressure tap or the gas piping drip leg.

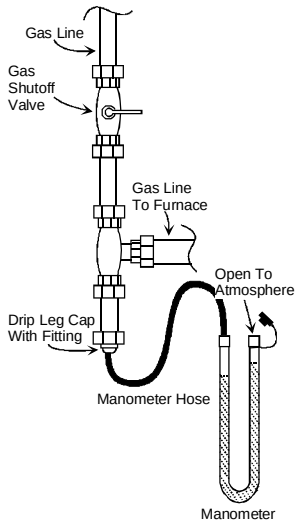


**Measuring Inlet Gas Pressure (Alt. Method)**

**NOTE:** At either location, a hose fitting must be installed prior to making the hose connection.

3. Turn ON the gas supply and operate the furnace and all other gas consuming appliances on the same gas supply line.
4. Measure furnace gas supply pressure with burners firing.

Supply pressure must be within the range specified in the *Inlet Gas Supply Pressure* table.

| Inlet Gas Supply Pressure | |
|---|---|
| Natural Gas | Minimum:5.0" W.C. Maximum :10.0" W.C. |
| Propane Gas | Minimum:11.0" W.C. Maximum :13.0" W.C. |

If supply pressure differs from above, make necessary adjustments to pressure regulator, gas piping size, etc., and/or consult with local gas utility.

5. Turn OFF gas to furnace at the manual shutoff valve and disconnect manometer. Reinstall plug before turning on gas to furnace.
6. Turn OFF any unnecessary gas appliances started in step 3.

## Gas Manifold Pressure Measurement and Adjustment

**CAUTION**

**To prevent unreliable operation or equipment damage, the gas manifold pressure must be as specified on the unit rating plate. Only minor adjustments should be made by adjusting the gas valve pressure regulator.**

Only small variations in gas pressure should be made by adjusting the gas valve pressure regulator. The manifold pressure must be measured with the burners operating. To measure and adjust the manifold pressure, use the following procedure.

1. Turn OFF gas to furnace at the manual gas shutoff valve external to the furnace.
2. Connect a calibrated water manometer (or appropriate gas pressure gauge) at the gas valve outlet pressure tap (refer to gas valve figure in previous section).
3. Turn ON the gas supply and operate the furnace.
4. Measure gas manifold pressure with burners firing. Adjust manifold pressure using the *Manifold Gas Pressure* table below.

| Manifold Gas Pressure | | | |
|---|---|---|---|
| Gas | Rate | Range | Nominal |
| Natural Gas | High Stage | 3.0 to 3.6" w.c. | 3.5" w.c. |
| | Low Stage | 1.6 to 2.2" w.c. | 1.9" w.c. |
| Propane Gas | High Stage | 9.7 to 10.3" w.c. | 10.0" w.c. |
| | Low Stage | 5.7 to 6.3" w.c. | 6.0" w.c. |

5. For **Natural Gas**, adjust the gas valve manifold pressure regulator as follows:
   a. *High Stage Manifold Pressure Adjustment*
      Remove the cap screw from the *high stage* manifold pressure regulator.
      Using an Allen wrench, adjust the *high stage* manifold pressure regulator to the required pressure.
      Reinstall cap screw and confirm high stage manifold pressure.
   b. *Low Stage Manifold Pressure Adjustment*
      Remove the cap screw from the *low stage* manifold pressure regulator.
      Using an Allen wrench, adjust the *low stage* manifold pressure regulator to the required pressure.
      Reinstall cap screw and confirm low stage manifold pressure.
6. For **Propane Gas**, adjustment the gas valve manifold pressure regulator as follows:
   a. Remove the cap screw from the *low stage* manifold pressure regulator.
   b. Using an Allen wrench, increase low fire manifold pressure by adjusting the *low stage* manifold regulator so the furnace will light and carryover.
   c. Remove the cap screw from the *high stage* manifold pressure regulator adjustment location.
   d. Using an Allen wrench, adjust the *high stage* manifold pressure regulator to the required manifold pressure.
   e. Reinstall the *high stage* manifold regulator cap screw. Confirm *high stage* manifold pressure.
   f. Using an Allen wrench, adjust the *low stage* manifold regulator, to obtain required manifold pressure.
   g. Reinstall *low stage* manifold regulator cap. Confirm *low stage* manifold pressure.
7. Turn OFF gas to furnace at the manual shutoff valve and disconnect manometer.
8. Reinstall gas valve outlet pressure tap plug before turning on gas to furnace.

## Gas Input Rate Measurement (Natural Gas Only)

The gas input rate to the furnace must never be greater than that specified on the unit rating plate. To measure natural gas input using the gas meter, use the following procedure.

1. Turn OFF the gas supply to all other gas-burning appliances except the furnace.
2. While the furnace is operating, time and record one complete revolution of the smallest gas meter dial.
3. Calculate the number of seconds per cubic foot (sec/ft$^3$) of gas being delivered to the furnace. If the dial is a one cubic foot dial, divide the number of seconds recorded in step 2 by one. If the dial is a two cubic foot dial, divide the number of seconds recorded in step 2 by two.
4. Calculate the furnace input in BTUs per hour (BTU/hr). Input equals the sum of the installation's gas heating value and a conversion factor (hours to seconds) divided by the number of seconds per cubic foot. The measured input must not be greater than the input indicated on the unit rating plate.
   EXAMPLE:
   Installation's gas heating (HTG) value: 1,000 BTU/ft$^3$ (Obtained from gas supplier)
   Installation's seconds per cubic foot: 34 sec/ ft$^3$
   Conversion Factor (hours to seconds): 3600 sec/hr
   Input = (Htg. value x 3600) ÷ seconds per cubic foot
   Input = (1,000 BTU/ft$^3$ x 3600 sec/hr) ÷ 34 sec/ ft$^3$
   Input = 106,000 BTU/hr

Minor changes to the input rate may be accomplished through manifold pressure adjustments at the gas valve. Refer to *Section XIV, Startup Procedure and Adjustment - Gas Manifold Pressure Measurement and Adjustment* for details. **NOTE:** The final manifold pressure cannot vary by more than ± 0.3" w.c. from the specified setting. Consult your local gas supplier if additional input rate adjustment is required.

5. Repeat steps 2 through 4 on high stage.
6. Turn ON gas to and relight all other appliances turned off in step 1. Be certain that all appliances are functioning properly and that all pilot burners are operating.

## Temperature Rise

Temperature rise must be within the range specified on the unit rating plate. An incorrect temperature rise may result in condensing in or overheating of the heat exchanger. An airflow and temperature rise table is provided in the Product Data Book applicable to your model*. Determine and adjust temperature rise as follows:

1. Operate furnace with burners firing for approximately ten minutes. Ensure all registers are open and all duct dampers are in their final (fully or partially open) position.
2. Place thermometers in the return and supply ducts as close to the furnace as possible. Thermometers must not be influenced by radiant heat by being able to "see" the heat exchanger.

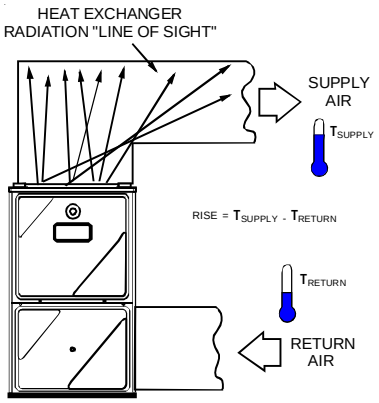


**Temperature Rise Measurement**

3. Subtract the return air temperature from the supply air temperature to determine the air temperature rise. Allow adequate time for thermometer readings to stabilize.
4. Adjust temperature rise by adjusting the circulator blower speed. Increase blower speed to reduce temperature rise. Decrease blower speed to increase temperature rise. Refer to *Section XIV, Startup Procedure and Adjustment -Circulator Blower Speeds* for speed changing details.

## Circulator Blower Speeds

**WARNING**

**To avoid personal injury or death due to electrical shock, turn off power to the furnace before changing speed taps.**

This furnace is equipped with a multi-speed circulator blower. This blower provides ease in adjusting blower speeds. The Product Data Book applicable to your model* provides an airflow table, showing the relationship between airflow (CFM) and external static pressure (E.S.P.), for the proper selection of heating and cooling speeds. The heating blower speed is shipped set at "B", and the cooling blower speed is set at "D". These blower speeds should be adjusted by the installer to match the installation requirements so as to provide the correct heating temperature rise and correct cooling CFM.

Use the CFM LED (green), adjacent to the integrated control module fuse to verify airflow quantity. The green CFM LED blinks once for each 100 CFM of airflow.

1. Determine the tonnage of the cooling system installed with the furnace. If the cooling capacity is in BTU/hr divide it by 12,000 to convert capacity to TONs.

   **Example:** Cooling Capacity of 30,000 BTU/hr.
   30,000/12,000 = 2.5 Tons

2. Determine the proper air flow for the cooling system. Most cooling systems are designed to work with air flows between 350 and 450 CFM per ton. Most manufacturers recommend an air flow of about 400 CFM per ton.

   **Example:** 2.5 tons X 400 CFM per ton = 1000 CFM

The cooling system manufacturer's instructions must be checked for required air flow. Any electronic air cleaners or other devices may require specific air flows, consult installation instructions of those devices for requirements.

3. Knowing the furnace model, locate the high stage cooling air flow charts in the Product Data Book applicable to your model*. Look up the cooling air flow determined in step 2 and find the required cooling speed and adjustment setting.

   **Example:** A GUVA070BX40 furnace installed with a 2.5 ton air conditioning system. The air flow needed is 1000 CFM. Looking at the cooling speed chart for GUVA070BX40, find the air flow closest to 1000 CFM. A cooling airflow of 990 CFM can be attained by setting the cooling speed to "C" and the adjustment to "-" (minus).

   **NOTE:** Continuous Fan Speed will be 56% of high stage cooling.

4. Locate the blower speed selection DIP switches on the integrated control module. Select the desired "cooling" speed tap by positioning switches 1 and 2 appropriately. Select the desired "adjust" tap by positioning switches 3 and 4 appropriately. Refer to the following figure for switch positions and their corresponding taps. Turn off power to furnace for a minimum of 10 seconds, allowing motor to reset and recognize new speed selection. Turn on power to furnace. Verify CFM by counting the number of times the green CFM LED blinks.

*NOTE: Please contact your distributor or our website for the applicable product data book referred to in this manual.

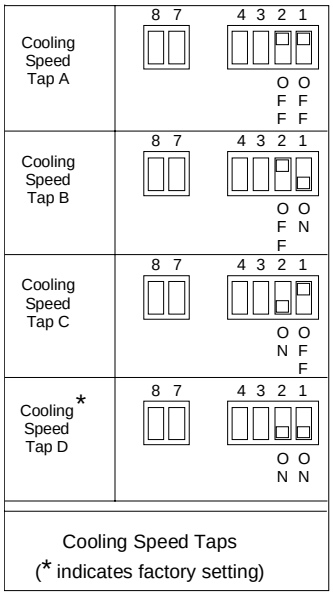


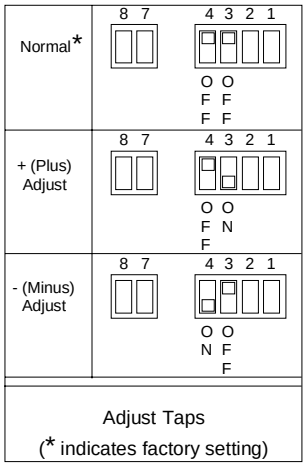


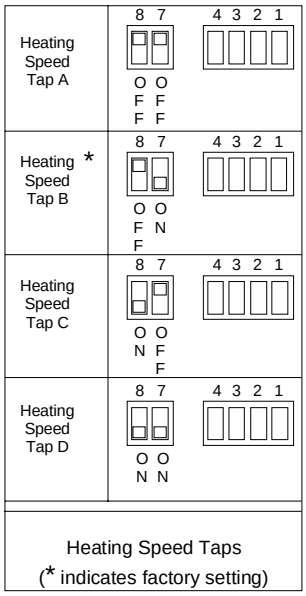


5. Select the heating speed from the heating speed chart in the Product Data Book applicable to your model* for your model. The adjust setting (already established by the cooling speed selection) determines which set of speeds are available. The selected speed must provide a temperature rise within the rise range listed with the particular model.

   **Example:** The GUVA070BX40 is set for 990 CFM on cooling, the "ADJUST" is set to "-" (minus). The four heating speeds available are "A Minus", "B Minus", "C Minus", and "D Minus". "A Minus" has a rise of 56°F for both stages which is within the 30-60°F rise range for the GUVA070BX40. This setting will keep electrical consumption to a minimum. Set the "Heat" speed DIP switches to "A".

6. Select the desired "heating" speed tap by positioning switches 7 and 8 appropriately. Refer to figure above. Turn off power to furnace for a minimum of 10 seconds, allowing motor to reset and recognize new speed selection. Turn on power to furnace. Verify selected CFM by counting the green CFM LED blinks.

In general lower heating speeds will: reduce electrical consumption, lower operating sound levels of the blower, and increase the outlet air temperature delivered to the home. The speeds available allow the blower performance to be optimized for the particular homeowner's needs.

### Blower Heat Off Delay Timings

The integrated control module provides a selectable heat off delay function. The heat off delay period may be set to 60, 90, 120, 180 seconds using the DIP switches or jumper provided on the control module. The delay is factory shipped at 90 seconds but may be changed to suit the installation requirements and/or homeowner preference. Refer to the following figures for switch positions and corresponding delay times.

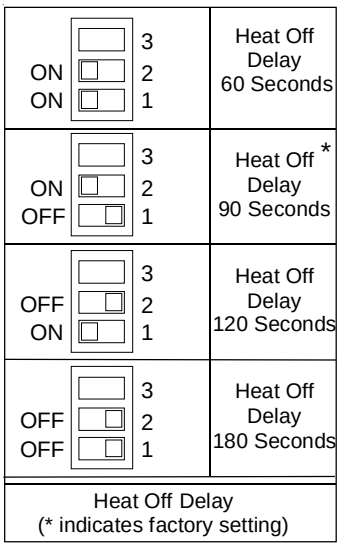


**Heat Off Delay Switches**

## XV. NORMAL SEQUENCE OF OPERATION

### Power Up

The normal power up sequence is as follows:

- 115 VAC power applied to furnace.
- Integrated control module performs internal checks.
- Integrated control module flashes LED one time.
- Integrated control module monitors safety circuits continuously.
- Furnace awaits call from thermostat.

### Heating Mode

The normal operational sequence in heating mode is as follows:

- R and W1 (or R and W1/W2) thermostat contacts close, initiating a call for heat.
- Integrated control module performs safety circuit checks.
- Induced draft blower is energized on high speed for a 10-second prepurge. Humidifier terminals are energized with induced draft blower.
- Induced draft blower steps to low speed following prepurge. Low stage pressure switch contacts are closed.
- Igniter warm up begins upon step to low speed and presence of closed low stage pressure switch contacts.
- Gas valve opens at end of igniter warm up period, delivering gas to burners and establishing flame.
- Integrated control module monitors flame presence. Gas valve will remain open only if flame is sensed.
- If the thermostat call is for low heat, gas valve and induced draft blower will continue on low stage. If the call is for high heat, the gas valve and induced draft blower will change to high stage.

- Circulator blower is energized on heat speed following a fixed thirty second blower on delay. The circulator blower requires thirty (30) seconds to ramp up to full speed. Electronic air cleaner terminals are energized with circulator blower.
- Furnace is now operating on the specified stage called for by the two-stage thermostat.
- Furnace runs, integrated control module monitors safety circuits continuously.
- If the two-stage thermostat changes the call from low heat to high heat, the integrated control module will immediately switch the induced draft blower, gas valve, and circulator blower to their high stage settings.
- If the two-stage thermostat changes the call from high heat to low heat, the control will immediately switch the induced draft blower and gas valve to their low stage settings. The circulator blower will remain on high heating speed for thirty (30) seconds before switching to the low heat circulating speed.
- R and W1 (or R and W1/W2) thermostat contacts open, completing the call for heat.
- Gas valve closes, extinguishing flame.
- Induced draft blower is de-energized following a fifteen second post purge. Humidifier terminals are de-energized.
- Circulator blower continues running for the selected heat off delay period (60, 90, 120, or 180 seconds). The speed run during this period depends on the last heat call provided by the thermostat.

  If the last call for heat was a call for low heat, the air circulator motor will run on low heat speed for the duration of the heat off delay period (60, 90, 120, or 180 seconds).

  If the last call for heat was a call for high heat, the air circulating motor will run on the high heating speed for thirty (30) seconds and then switch to the low heating speed for the **balance** of the heat off delay period (30, 60, 90, or 150 seconds).
- Circulator blower and electronic air cleaner terminals are de-energized.
- Circulator blower ramps down to OFF during the 30 seconds following the heat off delay period.
- Furnace awaits next call from thermostat.

### Cooling Mode

The normal operational sequence in cooling mode is as follows:

- R and YLO/G or Y/G thermostat contacts close, initiating a call for cool.
- Integrated control module performs safety circuit checks.
- Outdoor fan and compressor are energized to their appropriate speed.
- Circulator blower is energized on the appropriate cool speed following a fixed five second on delay. The circulator blower requires 30 seconds to ramp up to full speed. Electronic air cleaner terminals are energized with circulator blower.
- Furnace circulator blower and outdoor cooling unit run their appropriate speed, integrated control module monitors safety circuits continuously.
- R and YLO/G or Y/G thermostat contacts open, completing the call for cool.
- Outdoor fan and compressor are de-energized.
- Circulator blower continues running for a fixed 45-second cool off delay period. The speed run during this period depends on the last cooling call from the thermostat. If the call was for low cool, the blower will operate at 88% of low cool speed. If call was for high cool, blower operate at 88% of high cool speed.
- Electronic air cleaner terminals and circulator blower are de-energized.
- Furnace awaits next call from thermostat.

### Fan Only Mode

The normal operational sequence in fan only mode is as follows:

- R and G thermostat contacts close, initiating a call for fan.
- Integrated control module performs safety circuit checks.
- Circulator blower is energized on continuous fan speed (56% of high stage cooling) following a five (5) second delay. Electronic air cleaner terminals are energized.
- Circulator blower runs, integrated control module monitors safety circuits continuously.
- R and G thermostat contacts open, completing the call for fan.
- Circulator blower is de-energized. Electronic air cleaner terminals are de-energized.
- Furnace awaits next call from thermostat.

## XVI. Operational Checks

### Burner Flame

The burner flames should be inspected with the burner compartment door installed. A sight glass is provided for inspection purposes. Flames should stable, quiet, soft, and blue (dust may cause orange tips but they must not be yellow). Flames should extend directly outward from the burners without curling, floating, or lifting off. Flames must not impinge on the sides of the heat exchanger firing tubes.

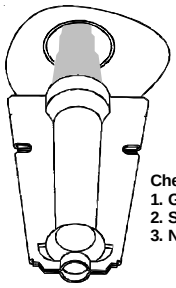

**Check the burner flames for:**
**1. Good adjustment**
**2. Stable, soft and blue**
**3. Not curling, floating, or lifting off.**

**Burner Flame**

### Primary Limit

The primary limit control guards against overheating resulting from insufficient conditioned air passing over the heat exchanger. If the primary limit control does not function during this test, the cause must be determined and corrected. Function of this control should be verified by gradually blocking the furnace return air after the furnace has been operating (burners firing) for approximately ten minutes. Check the control as follows:

1. Allow the furnace to operate with burners firing continuously for approximately ten minutes.
2. Gradually block the return air to furnace. Remove airflow blockage when limit control is activated and turns off burners.

# Timing Charts For Normal Heating Operation

## Example 1: Continuous Call For Low Stage Heat Only

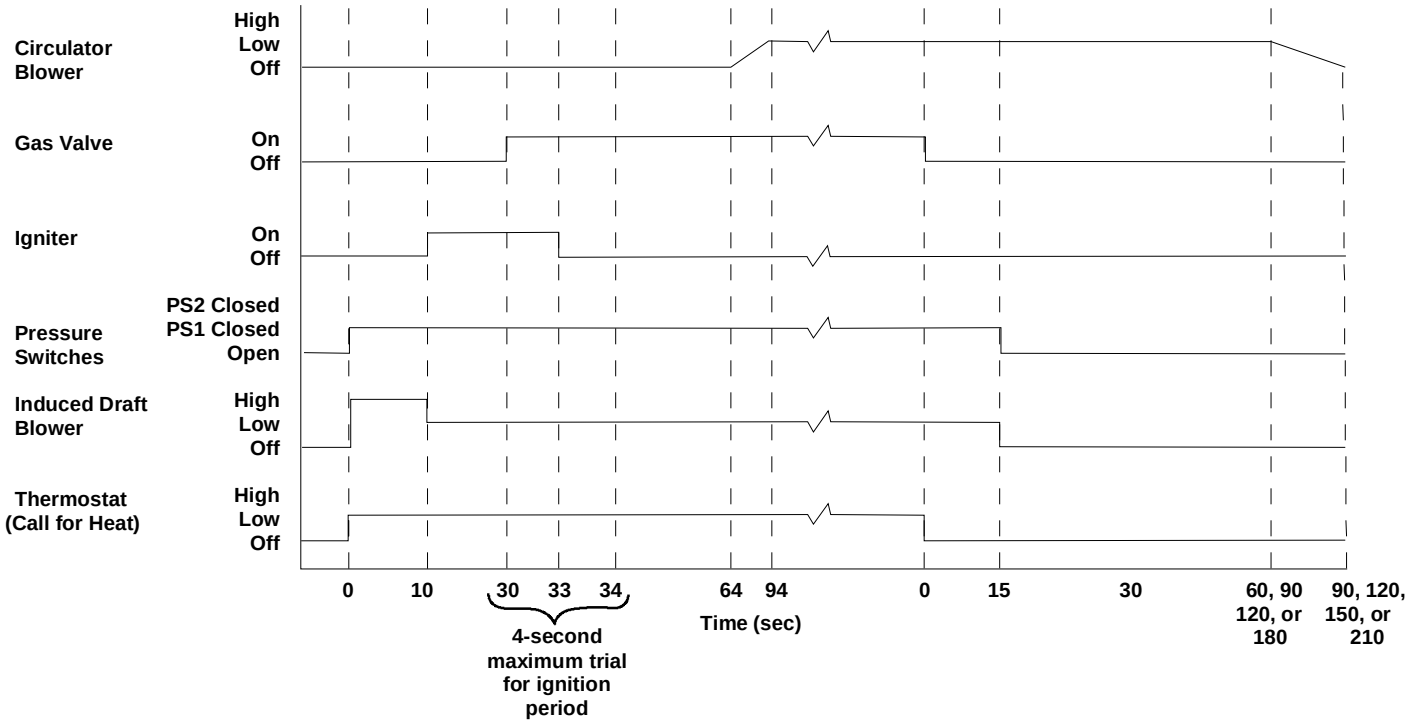


## Example 2: Continuous Call For High Stage Heat Only

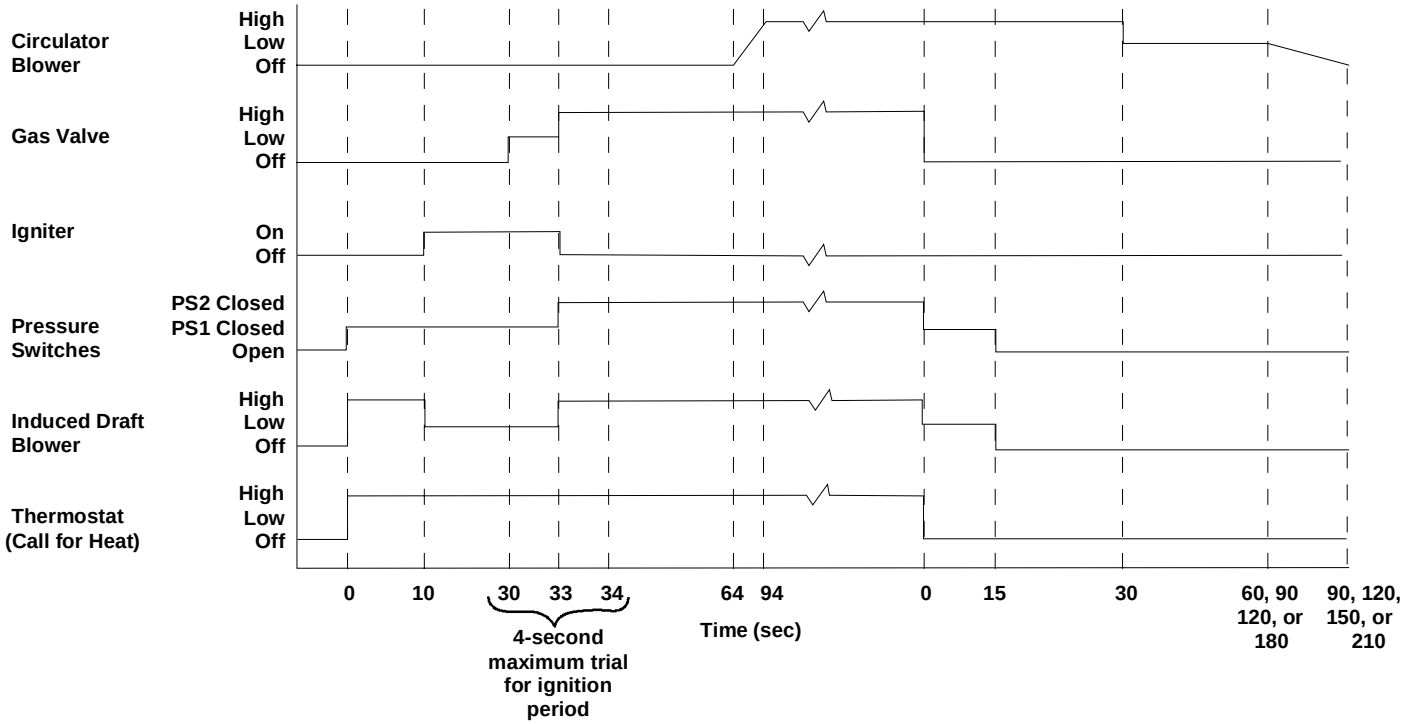

## Example 3: Initial Call For Low Heat, Change In Call To High Heat

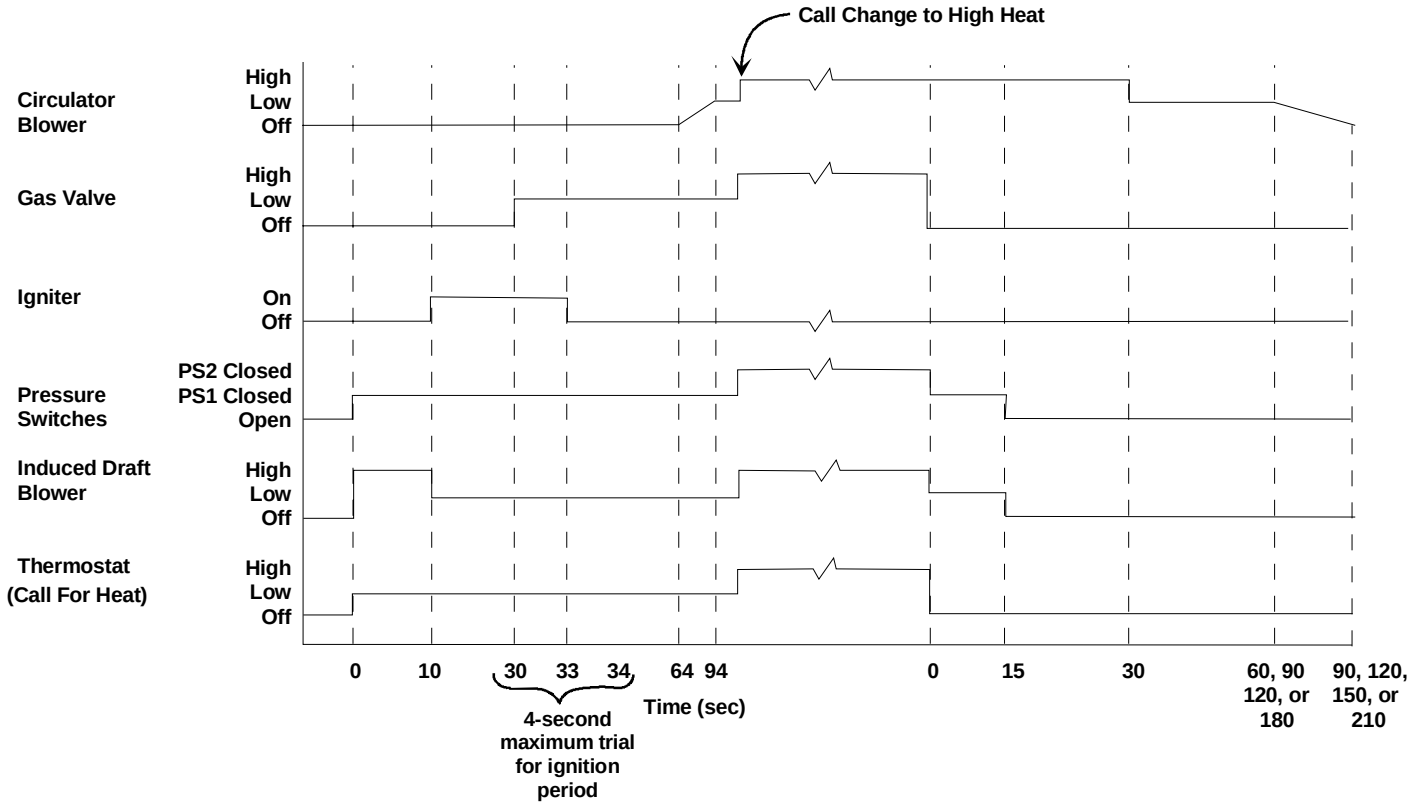


## Example 4: Initial Call For High Heat, Subsequent Call To Low Heat

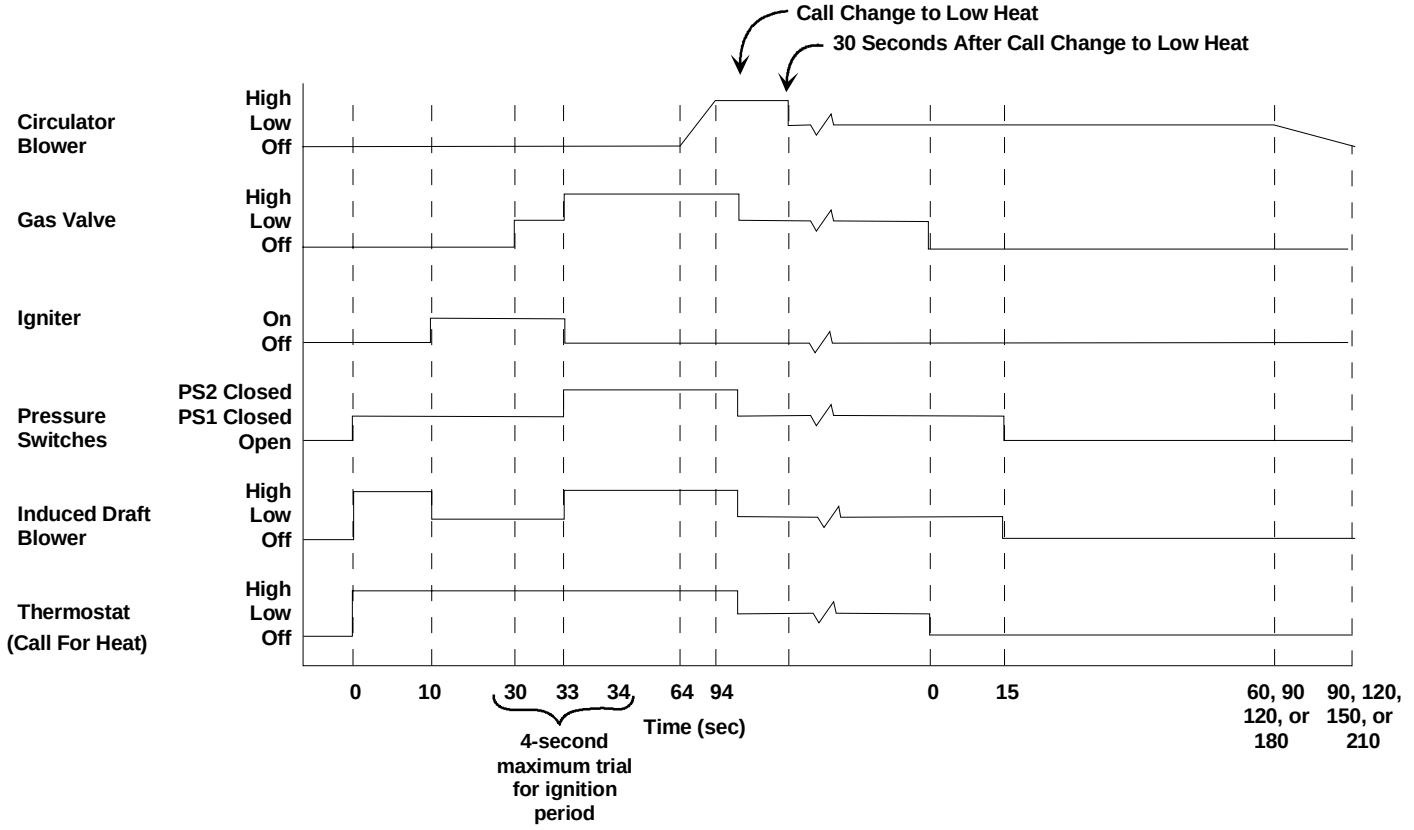

## Timing Charts for Normal Cooling Operation

Example 1: Continuous Call For Low Stage Cooling Only

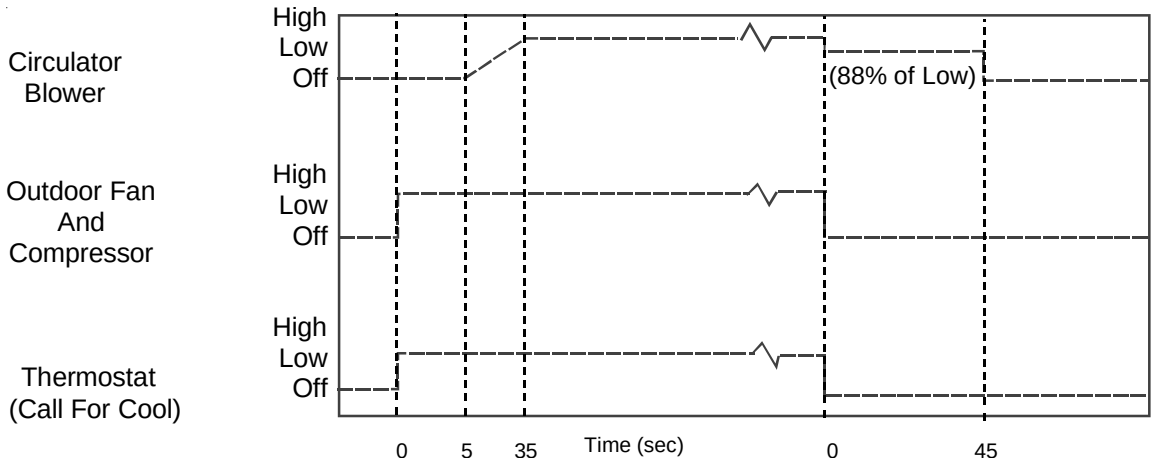


Example 2: Continuous Call For High Stage Cooling Only

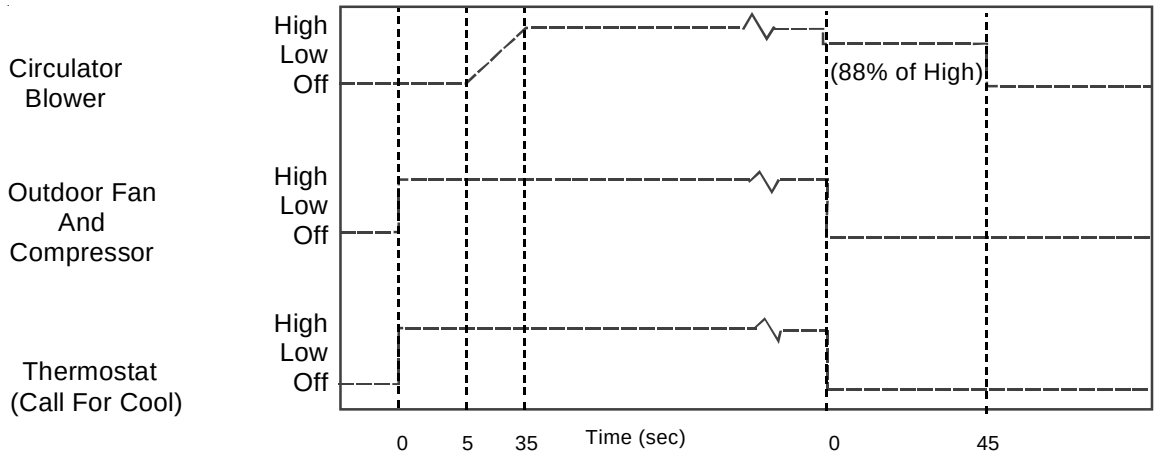


## Timing Chart for Normal Fan Operation

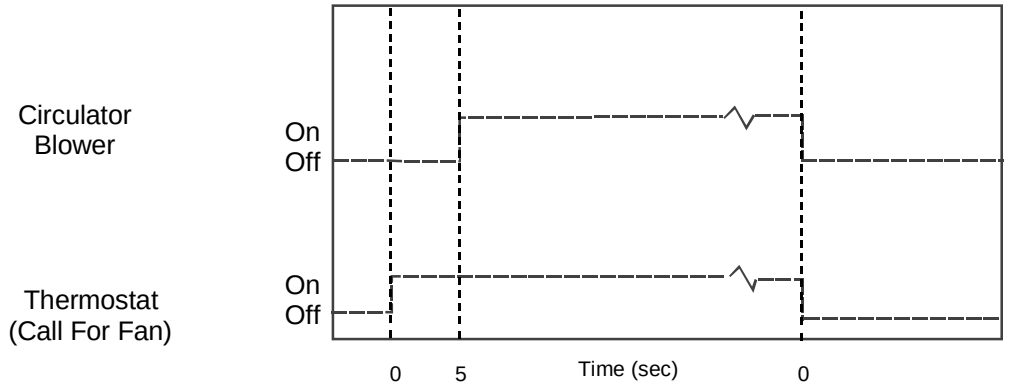

Airflow blockage causes unit overheating and will produce the following reactions:

- The gas valve to close and extinguish flame,
- The induced draft blower to deenergized after a fifteen second postpurge, and
- The circulator blower to remain energized continuously until limit control resets.

**NOTE:** If testing is performed on high stage, the circulator blower will switch to low stage speed following the selected heat off delay.

3. Remove the return air blockage to clear overheating condition. After an acceptable temperature is reached during the cool down period, the limit control will reset and allow the furnace to resume normal operation.

These checks establish that the primary limit control is functioning and will respond to a restriction in the return air, or a circulator blower failure. If the primary limit control does not function during this test, the cause must be determined and corrected.

## XVII. SAFETY CIRCUIT DESCRIPTION

### General

A number of safety circuits are employed to ensure safe and proper furnace operation. These circuits serve to control any potential safety hazards and serve as inputs in the monitoring and diagnosis of abnormal function. These circuits are continuously monitored during furnace operation by the integrated control module.

### Integrated Control Module

The integrated control module is an electronic device which a potential safety concern is detected, the module will take the necessary precautions and provide diagnostic information through an LED.

### Primary Limit

The primary limit control is located on the partition panel and monitors heat exchanger compartment temperatures. It is a normally-closed (electrically), automatic reset, temperature-activated sensor. The limit guards against the overheating as a resulting of insufficient conditioned air passing over the heat exchanger.

### Auxiliary Limit

The auxiliary limit controls are located on or near the circulator blower and monitors heat exchanger compartment temperatures. They are a normally-closed (electrically), manual-reset, temperature activated sensor. These limits guard against overheating as a result of insufficient conditioned air passing over the heat exchanger.

### Rollout Limit

The rollout limit controls are mounted on the burner/manifold assembly and monitor the burner flame. They are normally-closed (electrically), manual-reset, temperature-activated sensors. These limits guard against burner flames not being properly drawn into the heat exchanger.

### Pressure Switches

The pressure switches are normally-open (closed during operation), single-pole single-throw, negative air pressure-activated switches. They monitor the airflow (combustion air and flue products) through the heat exchanger via pressure taps located on the induced draft blower and the coil front cover. These switches guard against insufficient airflow (combustion air and flue products) through the heat exchanger and/or blocked condensate drain conditions.

### Flame Sensor

The flame sensor is a probe mounted to the burner/manifold assembly which uses the principle of flame rectification to determine the presence or absence of flame.

## XVIII. TROUBLESHOOTING

### Electrostatic Discharge (ESD) Precautions

**NOTE:** Discharge body's static electricity before touching unit. An electrostatic discharge can adversely affect electrical components.

Use the following precautions during furnace installation and servicing to protect the integrated control module from damage. By putting the furnace, the control, and the person at the same electrostatic potential, these steps will help avoid exposing the integrated control module to electrostatic discharge. This procedure is applicable to both installed and uninstalled (ungrounded) furnaces.

1. Disconnect all power to the furnace. Do not touch the integrated control module or any wire connected to the control prior to discharging your body's electrostatic charge to ground.
2. Firmly touch a clean, unpainted, metal surface of the furnaces near the control. Any tools held in a person's hand during grounding will be discharged.
3. Service integrated control module or connecting wiring following the discharge process in step 2. Use caution not to recharge your body with static electricity; (i.e., do not move or shuffle your feet, do not touch ungrounded objects, etc.). If you come in contact with an ungrounded object, repeat step 2 before touching control or wires.
4. Discharge your body to ground before removing a new control from its container. Follow steps 1 through 3 if installing the control on a furnace. Return any old or new controls to their containers before touching any ungrounded object.

### Diagnostic Chart

**WARNING**

**To avoid electrical shock, injury or death, disconnect electrical power before performing any service or maintenance.**

Refer to the *Troubleshooting Chart* at the end of this manual for assistance in determining the source of unit operational problems. The red diagnostic LED blinks to assist in troubleshooting the unit. The number of blinks refers to a specific fault code.

### Resetting From Lockout

Furnace lockout results when a furnace is unable to achieve ignition after three attempts, or when it has lost flame five times during a single call for heat. It is characterized by a non-functioning furnace and a one flash diagnostic LED code. If the furnace is in "lockout", it will (or can be) reset in any of the following ways.

1. Automatic reset. The integrated control module will automatically reset itself and attempt to resume normal operations following a one hour lockout period.
2. Manual power interruption. Interrupt 115 volt power to the furnace for 0 - 20 seconds.
3. Manual thermostat cycle. Lower the thermostat so that there is no longer a call for heat then reset to previous setting. Interrupt thermostat signal to the furnace for 0 - 20 seconds.

**NOTE:** If the condition which originally caused the lockout still exists, the control will return to lockout. Refer to *Section XVIII, Troubleshooting - Diagnostic Chart* for aid in determining the cause.

# XIX. MAINTENANCE

**WARNING**

**TO AVOID ELECTRICAL SHOCK, INJURY OR DEATH, DISCONNECT ELECTRICAL POWER BEFORE PERFORMING ANY MAINTENANCE. IF YOU MUST HANDLE THE IGNITER, HANDLE WITH CARE. TOUCHING THE IGNITER ELEMENT WITH BARE FINGERS, ROUGH HANDLING, OR VIBRATION COULD DAMAGE THE IGNITER RESULTING IN PREMATURE FAILURE. ONLY A QUALIFIED SERVICER SHOULD EVER HANDLE THE IGNITER.**

## ANNUAL INSPECTION

The furnace should be inspected by a qualified installer, or service agency at least once per year. This check should be performed at the beginning of the heating season. This will ensure that all furnace components are in proper working order and that the heating system functions appropriately. Pay particular attention to the following items. Repair or service as necessary.

- Flue pipe system. Check for blockage and/or leakage. Check the outside termination and the connections at and internal to the furnace.
- Heat exchanger. Check for corrosion and/or buildup within the heat exchanger passageways.
- Burners. Check for proper ignition, burner flame, and flame sense.
- Drainage system. Check for blockage and/or leakage. Check hose connections at and internal to furnace.
- Wiring. Check electrical connections for tightness and/or corrosion. Check wires for damage.
- Filters.

## FILTERS

**CAUTION**

**TO ENSURE PROPER UNIT PERFORMANCE, ADHERE TO THE FILTER SIZES GIVEN IN THE PRODUCT DATA BOOK APPLICABLE TO YOUR MODEL*.**

### *MAINTENANCE*

Improper filter maintenance is the most common cause of inadequate heating or cooling performance. Filters should be cleaned (permanent) or replaced (disposable) every two months or as required. When replacing a filter, it must be replaced with a filter of the same type and size.

### *FILTER REMOVAL*

Depending on the installation, differing filter arrangements can be applied. Filters can be installed in either the central return register or a side panel external filter rack (upflow only). A media air filter or electronic air cleaner can be used as an alternate filter. Follow the filter sizes given in the Recommended Minimum Filter size table to ensure proper unit performance.
To remove filters from an external filter rack in an upright upflow installation, follow the directions provided with external filter rack kit. To remove internal filters see *Internal Filter Removal* section. Internal filters are an accessory item and are not included with your furnace. For further details, see your distributor.

### *HORIZONTAL UNIT FILTER REMOVAL*

Filters in horizontal installations are located in the central return register or the ductwork near the furnace.
To remove:

1. Turn OFF electrical power to furnace.
2. Remove filter(s) from the central return register or ductwork.
3. Replace filter(s) by reversing the procedure for removal.
4. Turn ON electrical power to furnace.

### *MEDIA AIR FILTER OR ELECTRONIC AIR CLEANER REMOVAL*

Follow the manufacturer's directions for service.

## BURNERS

Visually inspect the burner flames periodically during the heating season. Turn on the furnace at the thermostat and allow several minutes for flames to stabilize, since any dislodged dust will alter the flames normal appearance. Flames should be stable, quiet, soft, and blue (dust may cause orange tips but they must not be yellow). They should extend directly outward from the burners without curling, floating, or lifting off. Flames must not impinge on the sides of the heat exchanger firing tubes.

## INDUCED DRAFT AND CIRCULATOR BLOWERS

The bearings in the induced draft blower and circulator blower motors are permanently lubricated by the manufacturer. No further lubrication is required. Check motor windings for accumulation of dust which may cause overheating. Clean as necessary.

## CONDENSATE TRAP AND DRAIN SYSTEM (QUALIFIED SERVICER ONLY)

Annually inspect the drain tubes, drain trap, and field-supplied drain line for proper condensate drainage. Check drain system for hose connection tightness, blockage, and leaks. Clean or repair as necessary.

## FLAME SENSOR (QUALIFIED SERVICER ONLY)

Under some conditions, the fuel or air supply can create a nearly invisible coating on the flame sensor. This coating acts as an insulator causing a drop in the flame sense signal. If the flame sense signal drops too low the furnace will not sense flame and will lock out. The flame sensor should be carefully cleaned by a qualified servicer using emery cloth or steel wool. Following cleaning, the flame sense signal should be as indicated in the Specifications Sheet.

## FLUE PASSAGES (QUALIFIED SERVICER ONLY)

The heat exchanger flue passageways should be inspected at the beginning of each heating season. If necessary, clean the passageways as outlined below.

1. Turn OFF the electrical power and gas supply to the furnace.
2. Disconnect the gas line and remove the burner/ manifold assembly by removing the screws securing the assembly to the partition panel.
3. Disconnect the flue pipe system from the induced draft blower.
4. Remove the induced draft blower and, drain and pressure tap hoses from the recuperator coil front cover.
5. Remove the recuperator coil front cover to expose the coil tubes and turbulators.
6. Remove the recuperator coil turbulators individually by slowly pulling each turbulator forward firmly.
7. Clean the recuperator coil tubes using a long handle wire brush, such as a gun cleaning brush.
8. Clean the primary heat exchanger tubes using a wire brush attached to a length of high grade stainless steel cable, such as drain cleanout cable. Attach a variable speed reversible drill to the other end of the cable. Slowly rotate the cable with the drill and insert it into one of the heat exchanger tubes. While reversing the drill, work the cable in and out several

times to obtain sufficient cleaning. Repeat for each tube.

9. Clean residue from furnace using a vacuum cleaner.
10. Replace the parts removed in the previous steps in reverse order.
11. Turn on electrical power and gas to furnace. Check for leaks and proper unit operation.
12. Severe heat exchanger fouling is an indication of an operational problem. Perform the checks listed in *Section XIV, Startup Procedure and Adjustments* to reduce the chances of repeated fouling.

## XX. INTERNAL FILTER REMOVAL

Internal filters are an accessory item and are not included with your furnace. For further details, see your distributor.

### Bottom Return Removal

1. Turn OFF electrical power to furnace.
2. Remove blower compartment door.
3. Push back and up on the wire filter retainer to release it from under the front lip of the furnace basepan.
4. Slide filter forward and out.
5. Replace filter by reversing the procedure.

### Blower Compartment Removal

1. Turn OFF electrical power to furnace.
2. Remove blower compartment door.
3. Grasp lower portion of filter and lift up.

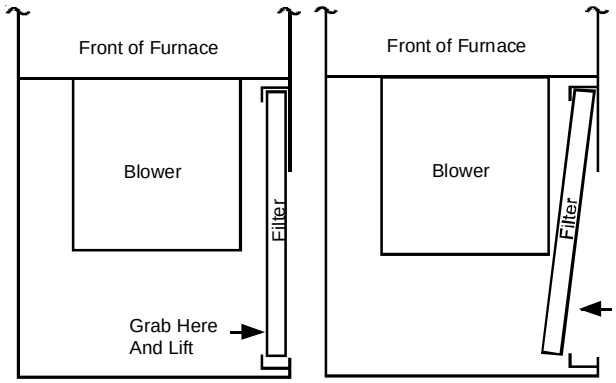


4. Angle filter toward the blower until filter clears bottom rail.
5. Lower filter down and pull outward.

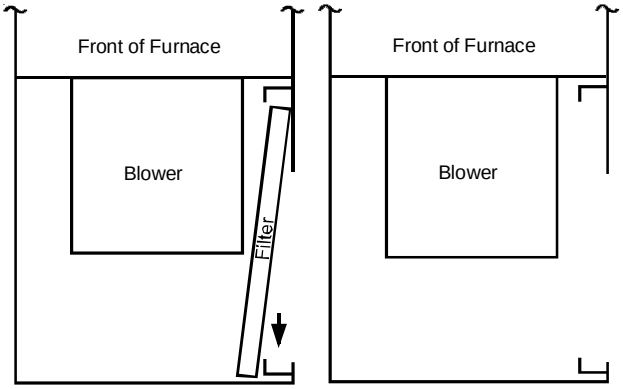


6. Replace filter by reversing procedure.

## XXI. BEFORE LEAVING AN INSTALLATION

- Cycle the furnace with the thermostat at least three times. Verify cooling and fan only operation.
- Review the Owner's Manual with the homeowner and discuss proper furnace operation and maintenance.
- Leave literature packet near furnace.

## XXII. REPAIR & REPLACEMENT PARTS

- When ordering any of the listed functional parts, be sure to provide the furnace model, manufacturing, and serial numbers with the order.
- Although only functional parts are shown in the parts list, all sheet metal parts, doors, etc. may be ordered by description.
- Parts are available from your distributor.

Functional Parts List-

| | |
|---|---|
| Gas Valve | Blower Motor |
| Gas Manifold | Blower Wheel |
| Natural Gas Orifice | Blower Mounting Bracket |
| Propane Gas Orifice | Blower Cutoff |
| Igniter | Blower Housing |
| Flame Sensor | Capacitor |
| Rollout Limit Switch | Heat Exchanger |
| Primary Limit Switch | Recuperator Coil |
| Auxiliary Limit Switch | Coil Front Cover |
| Pressure Switch | Integrated Control Module |
| Induced Draft Blower | Transformer |
| Door Switch | |

# Troubleshooting Chart

| Symptoms of Abnormal Operation | Associated LED Code[2] | Fault Description(s) | Possible Causes | Corrective Action | Cautions and Note |
|---|---|---|---|---|---|
| • Furnace fails to operate.<br>• Integrated control module diagnostic **LED** provides **no signal**. | NONE | • No 115 volt power to furnace, or no 24 volt power to integrated control module.<br>• Blown fuse or circuit breaker.<br>• No signal from thermostat. | • Manual disconnect switch OFF, door switch open, or 24 volt wires improperly connected or loose.<br>• Blown fuse or circuit breaker.<br>• Improper thermostat connection or setting. | • Assure 115 and 24 volt power to furnace integrated control module.<br>• Check integrated control module fuse (3A). Replace if necessary.<br>• Check for possible shorts in 115 and 24 volt circuits. Repair as necessary. | • Turn power OFF prior to repair.<br>• Replace integrated control module fuse with 3A automotive fuse.<br>• Improper thermostat connection or setting. |
| • Furnace fails to operate.<br>• Integrated control module diagnostic **LED** is lit **continuously**. | ON<br>CONTINUOUS ON | • Integrated control module has an internal fault. | • Integrated control module has an internal fault. | • Replace bad integrated control module. | • Turn power OFF prior to repair.<br>• Read precautions in “Electrostatic Discharge” section of manual. |
| • Furnace fails to operate.<br>• Integrated control module diagnostic **LED** is flashing **ONE** (1) flash. | 1<br>1 FLASH | • Furnace lockout due to an excessive number of ignition “retries” (3 total) or “recycles (5 total)[1]. | • Failure to establish flame. Cause may be no gas to burners, front cover pressure switch stuck open, bad igniter or igniter alignment, improper orifices, or coated/oxidized or improperly connected flame sensor.<br>• Loss of flame after establishment. Cause may be interrupted gas supply, lazy burner flames (improper gas pressure or restriction in flue and/or combustion air piping), front cover pressure switch opening, or improper induced draft blower performance. | • Locate and correct gas interruption.<br>• Check front cover pressure switch operation (hose, wiring, contact operation). Correct if necessary.<br>• Replace or realign igniter.<br>• Check flame sense signal. Sand sensor if coated and/or oxidized.<br>• Check flue piping for blockage, proper length, elbows, and termination.<br>• Verify proper induced draft blower perfor-mance. | • Turn power OFF prior to repair.<br>• Igniter is fragile, handle with care.<br>• Sand flame sensor with emery cloth.<br>• See “Vent/Flue Pipe” section for piping details. |
| • Furnace fails to operate.<br>• Integrated control module diagnostic **LED** is flashing **TWO** (2) flashes. | 2<br>2 FLASHES | • Pressure switch circuit is closed.<br>• Induced draft blower **is not** operating. | • Induced draft blower pressure switch contacts sticking.<br>• Shorts in pressure switch circuit. | • Replace induced draft blower pressure switch.<br>• Repair short. | • Turn power OFF prior to repair.<br>• Replace pressure switch with proper replacement part. |
| • Induced draft blower runs continuously with no further furnace operation.<br>• Integrated control module diagnostic **LED** is flashing **THREE** (3) flashes. | 3<br>3 FLASHES | • Pressure switch circuit not closed.<br>• Induced draft blower **is** operating. | • Pressure switch hose blocked, pinched or connected improperly.<br>• Blocked flue and/or inlet air pipe, blocked drain system, or weak induced draft blower.<br>• Incorrect pressure switch setpoint or malfunctioning switch contacts.<br>• Loose or improperly connected wiring. | • Inspect pressure switch hose. Repair, if necessary,<br>• Inspect flue and/or inlet air piping for blockage, proper length, elbows, and termination. Check drain system. Correct as necessary.<br>• Correct pressure switch setpoint or contact motion.<br>• Tighten or correct wiring connection. | • Turn power OFF prior to repair.<br>• Replace pressure switch with proper replacement part. |

[1]Integrated control module will automatically attempt to reset from lockout after one hour.

# Troubleshooting Chart

| Symptoms of Abnormal Operation | Associated LED Code[2] | Fault Description(s) | Possible Causes | Corrective Action | Cautions and Notes |
|---|---|---|---|---|---|
| • Circulator blower runs continuously. No furnace operation.<br>• Integrated control module diagnostic **LED** is flashing **FOUR** (4) flashes. | 4<br>4 FLASHES | • Primary or auxiliary limit circuit is open.<br>• Rollout limit circuit is open. | • Insufficient conditioned air over the heat exchanger. Blocked filters, restrictive ductwork, improper circulator blower speed, or failed circulator blower.<br>• Flame rollout.<br>• Misaligned burners, blocked flue and/or air inlet pipe, or failed induced draft blower.<br>• Loose or improperly connected wiring. | • Check filters and ductwork for blockage. Clean filters or remove obstruction.<br>• Check circulator blower speed and performance. Correct speed or replace blower if necessary.<br>• Check burners for proper alignment.<br>• Check flue and air inlet piping for blockage, proper length, elbows, and termination. Correct as necessary.<br>• Check induced draft blower for proper performance. Replace, if necessary.<br>• Tighten or correct wiring connection. | • Turn power OFF prior to repair.<br>• See Product Data Book applicable to your model* for allowable rise range and proper circulator speed.<br>• See "Vent/Flue Pipe" section for piping details.<br>• Replace pressure switch with proper replacement part. |
| • Furnace fails to operate.<br>• Integrated control module diagnostic **LED** is flashing **SIX** (6) flashes. | 6<br>6 FLASHES | • Polarity of 115 volt power is reversed. | • Polarity of 115 volt AC power to furnace or integrated control module is reversed.<br>• Poor unit ground. | • Review wiring diagram to correct polarity.<br>• Verify proper ground. Correct if necessary.<br>• Check and correct wiring. | • Turn power OFF prior to repair. |
| • Induced draft blower runs continuously. No furnace operation.<br>• Integrated control module diagnostic **LED** is flashing **SEVEN** (7) flashes. | 7<br>7 FLASHES | • Flame sense microamp signal is low. | • Flame sensor is coated/ oxidized.<br>• Flame sensor incorrectly positioned in burner flame.<br>• Lazy burner flame due to improper gas pressure or combustion air. | • Sand flame sensor is coated/oxidized.<br>• Inspect for proper sensor alignment.<br>• Check inlet air piping for blockage, proper length, elbows, and termination.<br>• Compare current gas pressure to rating plate info. Adjust as needed. | • Turn power OFF prior to repair.<br>• Sand flame sensor with emery clot.<br>• See "Vent/Flue Pipe" section for piping details.<br>• See rating plate for proper gas pressure. |
| • Furnace not operating.<br>• Integrated control module diagnostic **LED** is flashing **EIGHT** (8) flashes**.** | 8<br>8 FLASHES | • Problem with igniter circuit. | • Improperly connected igniter<br>• Bad igniter<br>• Poor unit ground | • Check and correct wiring from integrated control module to igniter<br>• Replace bad igniter<br>• Check and correct unit ground wiring | • Turn power OFF prior to repair.<br>• Replace igniter with proper silicon nitride replace-ment part. |
| • Furnace operating on low stage gas with high stage induced draft blower<br>• High stage circulator blower (temperature, of conditioned air, lower than typical).<br>• Integrated control module diagnostic **LED** is flashing **NINE** (9) flashes**.** | 9<br>9 FLASHES | • High stage pressure switch circuit does not close in response to high stage induced draft blower operation. | • Pressure switch hose blocked, pinched or connected improperly.<br>• Blocked flue and/or inlet air pipe, blocked drain system, or weak induced draft blower.<br>• Incorrect pressure switch setpoint or malfunctioning switch contacts.<br>• Loose or improperly connected wiring. | • Inspect pressure switch hose. Repair, if necessary.<br>• Inspect flue and/or inlet air piping for blockage, proper length, elbows, and termina-tion. Check drain system. Correct as necessary.<br>• Correct pressure switch setpoint or contact motion.<br>• Tighten or correct wiring connection. | • Turn power OFF prior to repair.<br>• Replace pressure switch with proper replacement part. |
| • Induced draft blower runs continuously. No furnace operation.<br>• Integrated control module diagnostic **LED** is flashing **continuously.** | C<br>CONTINUOUS FLASHING | • Flame sensed with no call for heat. | • Short to ground in flame sense circuit.<br>• Lingering burner flame.<br>• Slow closing gas valve | • Correct short at flame sensor or in flame sensor wiring.<br>• Check for lingering flame<br>• Verify proper operation of gas valve | • Turn power OFF prior to repair. |

# GUVA/GCVA WIRING DIAGRAM

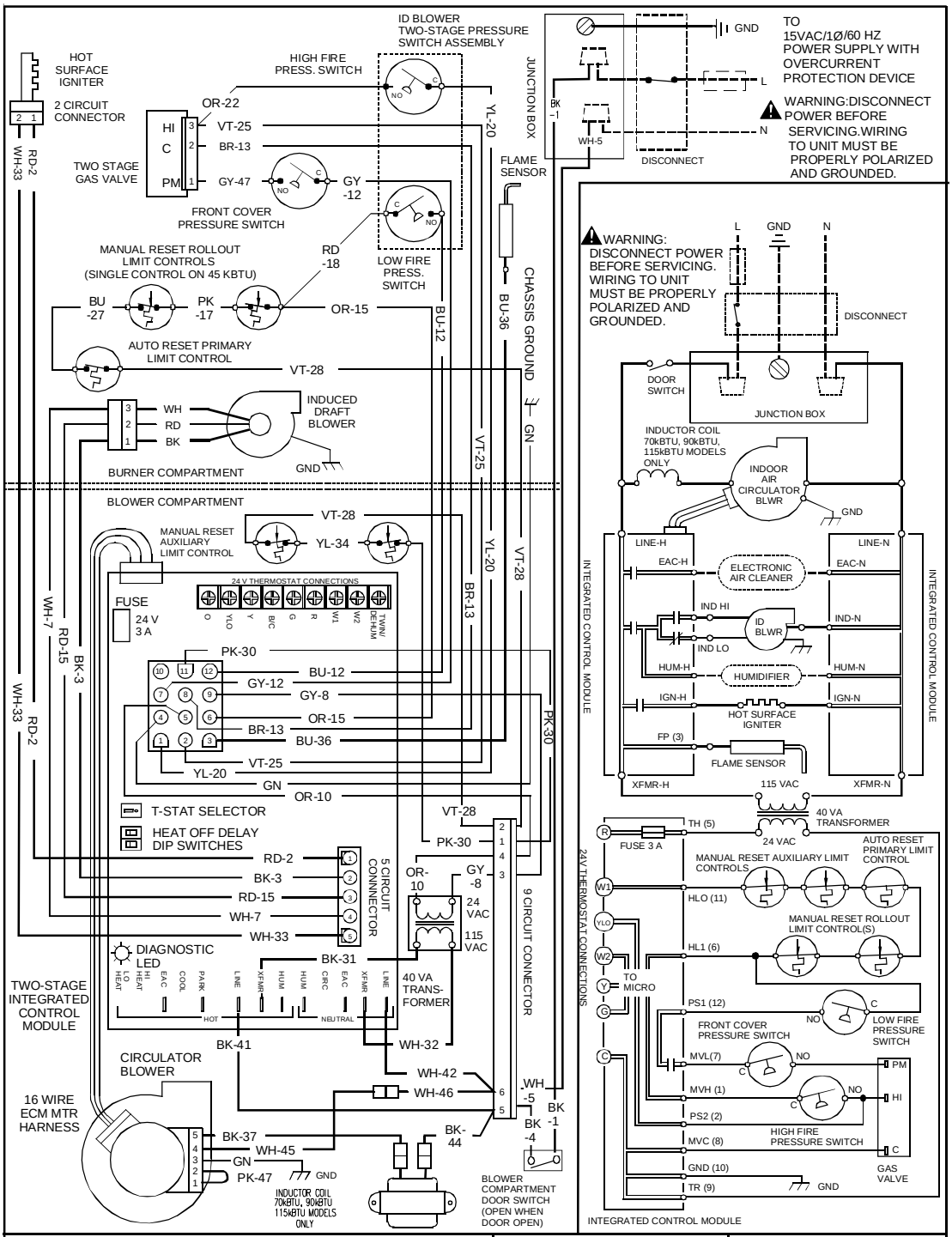


- 0 STEADY ON = REPLACE CONTROL
- 1 FLASH = SYSTEM LOCKOUT (RETRIES/RECYCLES EXCEEDED)
- 2 FLASHES = LOW FIRE PRESSURE SWITCH STUCK CLOSED
- 3 FLASHES = LOW FIRE PRESSURE SWITCH STUCK OPEN
- 4 FLASHES = THERMAL PROTECTIVE DEVICE OPEN
- 6 FLASHES = 115 VOLT AC POWER REVERSED
- 7 FLASHES = LOW FLAME SENSE SIGNAL
- 8 FLASHES = CHECK IGNITER OR IMPROPER GROUNDING
- 9 FLASHES = HIGH FIRE PRESSURE SWITCH STUCK OPEN
- C CONTINUOUS FLASHES = UNANTICIPATED FLAME PRESENT

LOW VOLTAGE (24V)
LOW VOLTAGE FIELD
HI VOLTAGE (115V)
HI VOLTAGE FIELD
JUNCTION
TERMINAL
INTERNAL TO INTEGRATED CONTROL
PLUG CONNECTION

EQUIPMENT GND
FIELD GND
FIELD SPLICE
SWITCH (TEMP.)
IGNITER
SWITCH (PRESS.)
OVERCURRENT PROT. DEVICE

| COLOR CODES: | |
|---|---|
| YL YELLOW | PK PINK |
| OR ORANGE | BR BROWN |
| VT VIOLET | WH WHITE |
| GN GREEN | BU BLUE |
| BK BLACK | GY GRAY |
| | RD RED |

20339701 REV.00

NOTES:
1. SET HEAT ANTICIPATOR ON ROOM THERMOSTAT AT 0.7 AMPS.
2. MANUFACTURER'S SPECIFIED REPLACEMENT PARTS MUST BE USED WHEN SERVICING.
3. IF ANY OF THE ORIGINAL WIRE AS SUPPLIED WITH THE FURNACE MUST BE REPLACED, IT MUST BE REPLACED WITH WIRING MATERIAL HAVING A TEMPERATURE RATING OF AT LEAST 105°C. USE COPPER CONDUCTORS ONLY.
4. UNIT MUST BE PERMANENTLY GROUNDED AND CONFORM TO N.E.C. AND LOCAL CODES.

©2004 Goodman Company, L.P.
Effective: February 2004